Chapter 8

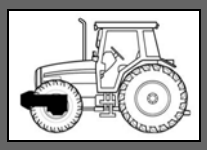

Front axle

Table of contents

8A10

DANA770 - General

TABLE OF CONTENTS

A. General

The axle described in this manual has been designed and manufactured according to the customer's specifications. It comprises a housing containing the differential in its central section and a wheel hub assembly at each end.
The differential is "Limited slip" type, and is held in place by two half bearings mounted on a suitable support allowing adjustment of the crownwheel and pinion assembly.

Parts list

(1) Hub assembly
(2) Axle beam assembly
(3) Differential assembly
(4) Steering ram assembly
(5) Differential cover plate
(6) Steering pivot
(7) Final drive assembly

The bevel gear is supported by two bearings and is adjusted using shims.
The wheel hubs containing the final drives are held in place by two tapered roller bearings and driven by a hydraulically-controlled steering gear.
The front axle is driven by the tractor's gearbox via a universal joint shaft passing underneath the engine.

Front axle models according to tractor

- fixed axle 770/504
- suspended axle 770/612

A.1 View of DANA fixed axle assembly

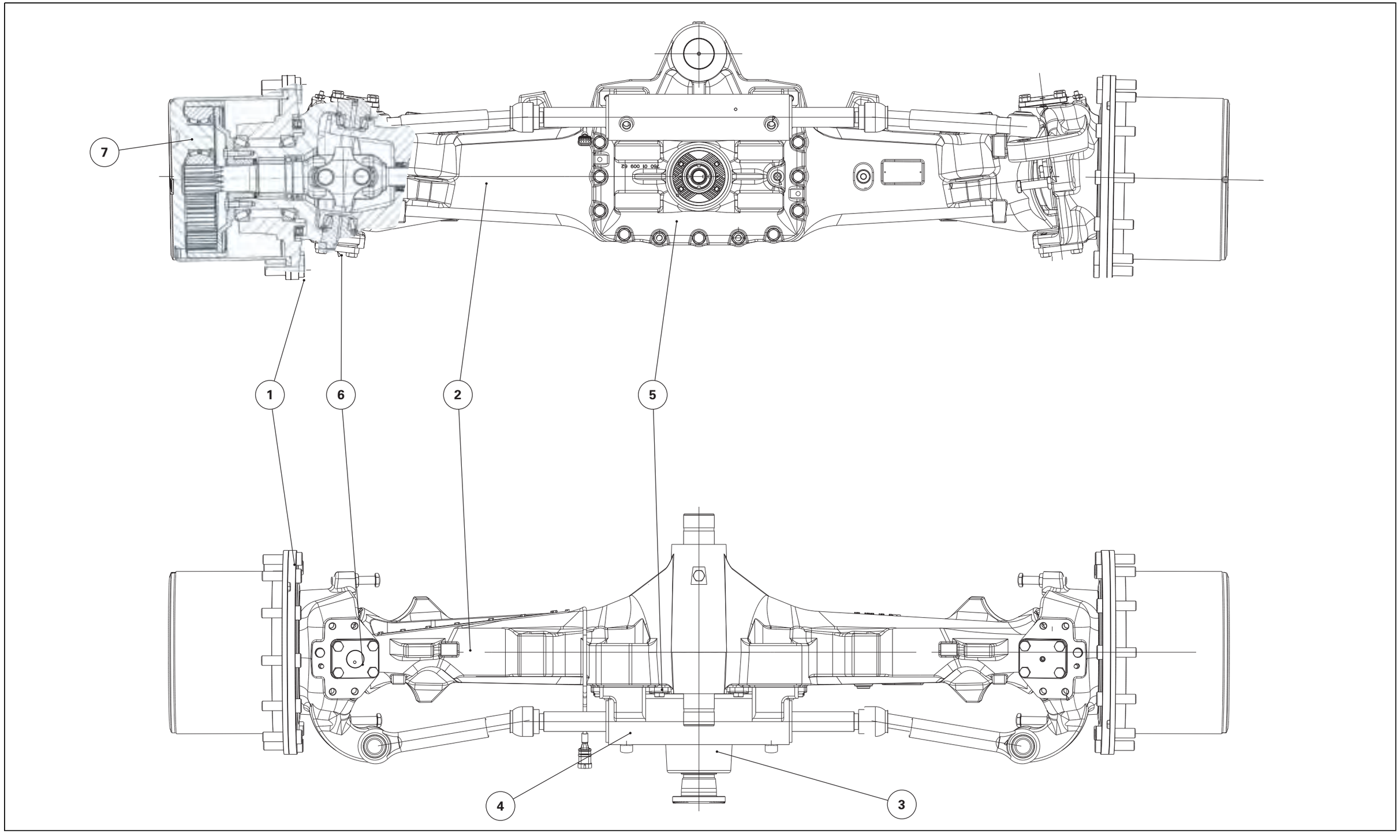

Fig. 1

A.2 View of DANA suspended axle assembly

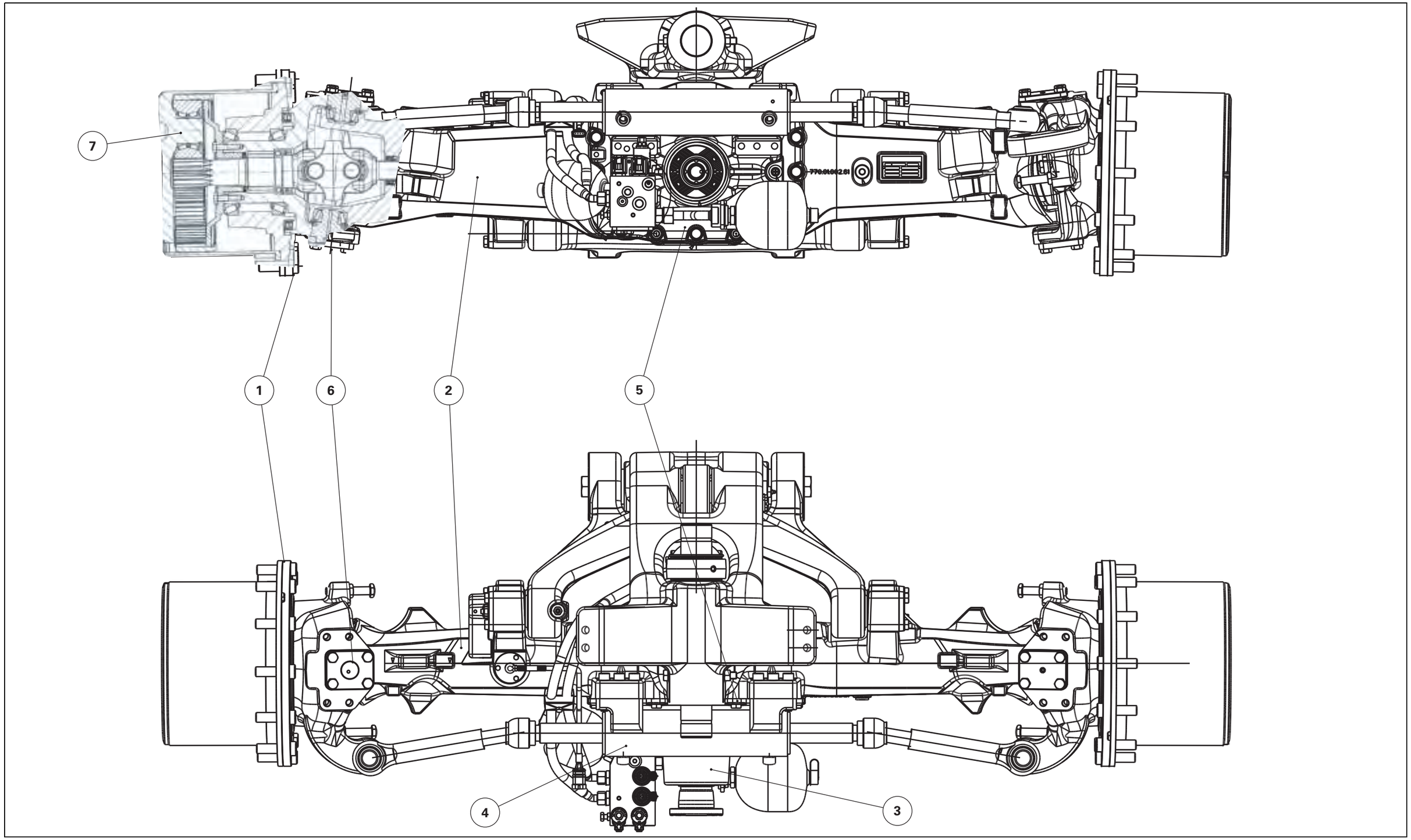

Fig. 2

Dimensions: fixed axle 770/504 (Fig. 3)

770/504		
A = 2412 mm	F = M22x1.5	K = 246 mm
B = 1892 mm	G = 47 mm	L = 158 mm
C = Ø 425 mm	H = 700 mm	M = 280 mm
D = Ø 370.8 mm 0/-0.8 mm	I = 344 mm	N = 135 mm
E = 1610 mm	J = 340.5 mm	

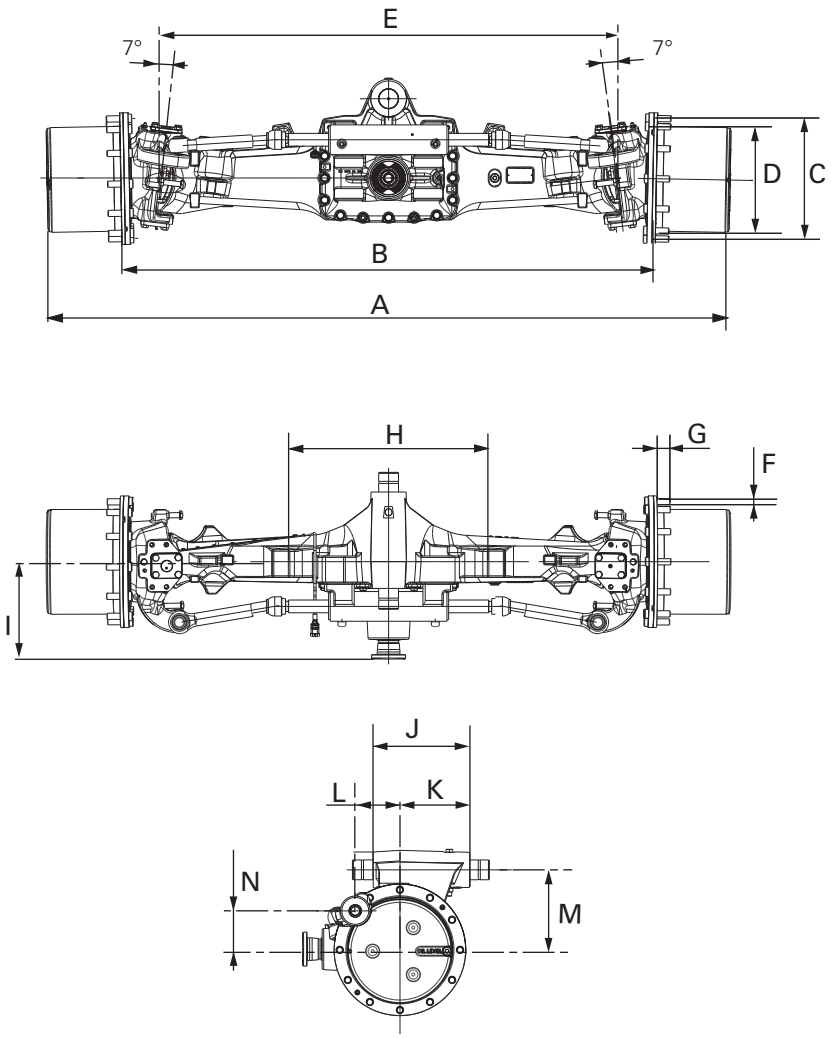

I007479

Fig. 3

Dimensions: suspended axle 770/612 (Fig. 4)

770/612		
A = 2412 mm	F = M22x1.5	K = 246 mm
B = 1892 mm	G = 47 mm	

770/612		
C = Ø 425 mm	H = 544 mm	M = 296 mm ±45 mm
D = Ø 370.8 mm 0/-0.8 mm	I = 344 mm	
E = 1610 mm	J = 340.5 mm	

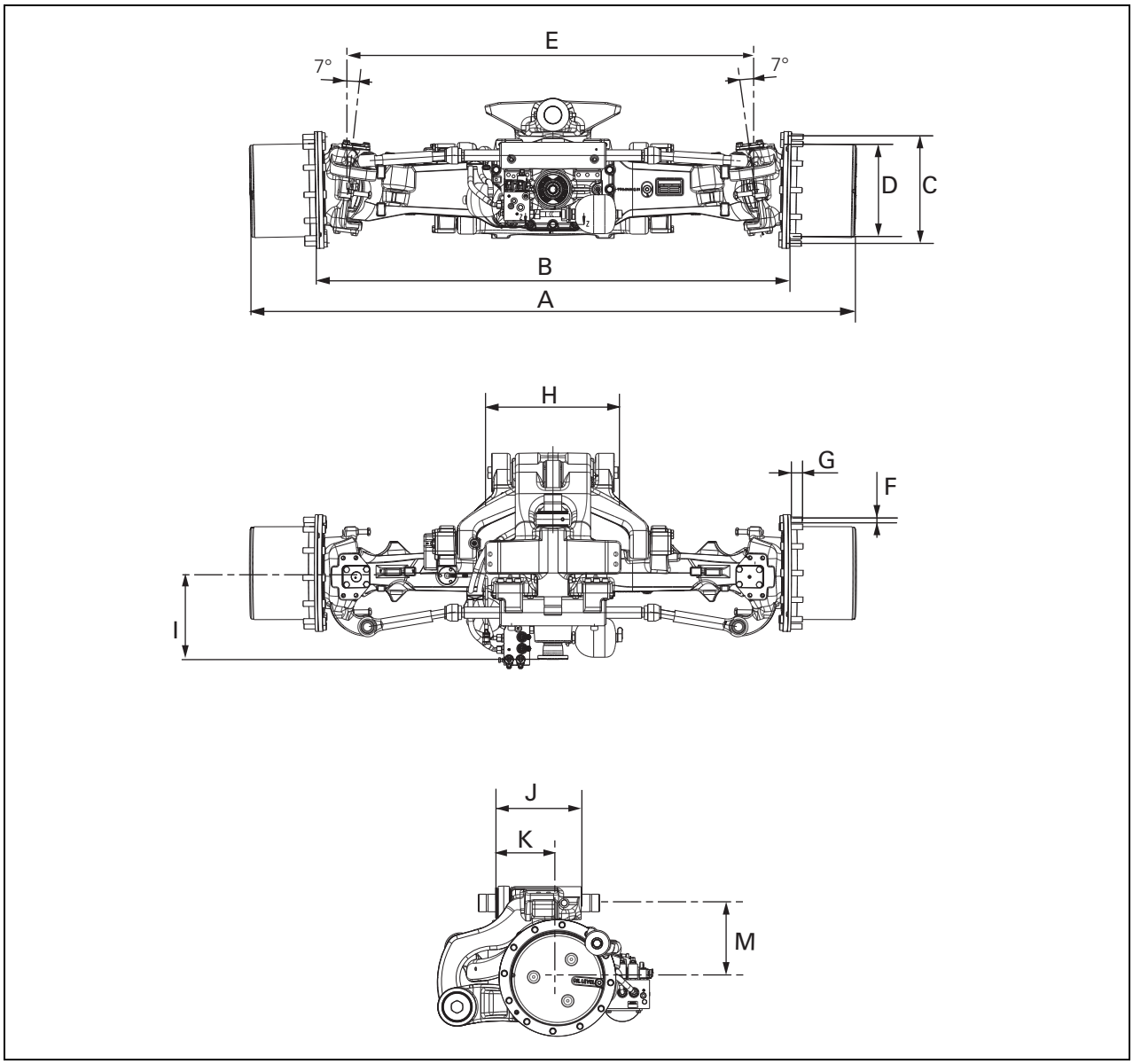

I007480

Fig. 4

Technical specifications

Description	Axle model	
	770/504	770/612
Differential	13/31	13/31
Final drive	7.071	7.071
Total reduction	16.862	16.862
Weight (filled with oil)	765 kg	1066 kg
Input rotation	Clockwise	
Differential type	Multidisc (15) and 4 sun gears	
Steering angle	55°	

Description	Axle model	
	770/504	770/612
Oil specifications	SAE 85 W 90 (API GL5)	SAE 85 W 90 (API GL5)
Differential oil capacity	15 l	15 l
Final drive unit oil capacity	2 x 7 l	2 x 7 l
Differential lock clutch supply pressure	18 bar	
Grease	Molykote	
Crownwheel and pinion backlash	0.15 mm to 0.20 mm	0.15 mm to 0.20 mm

Product identification

The DANA front axle is identified by a plate fitted to the axle beam (Fig. 5).

(1) DANA model and type
(2) Serial number
(3) Reference
(4) Reduction ratio

(1) Differential oil filler plug and oil level plug
(2) Final drives oil filler/drain and level plug
(3) Differential oil drain plug
(4) Lubrication points

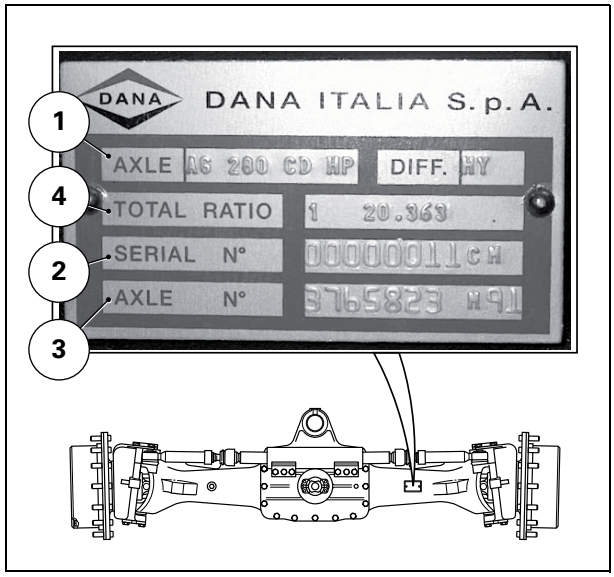

I007481

Fig. 5

A.3 Topping up and checking oil levels

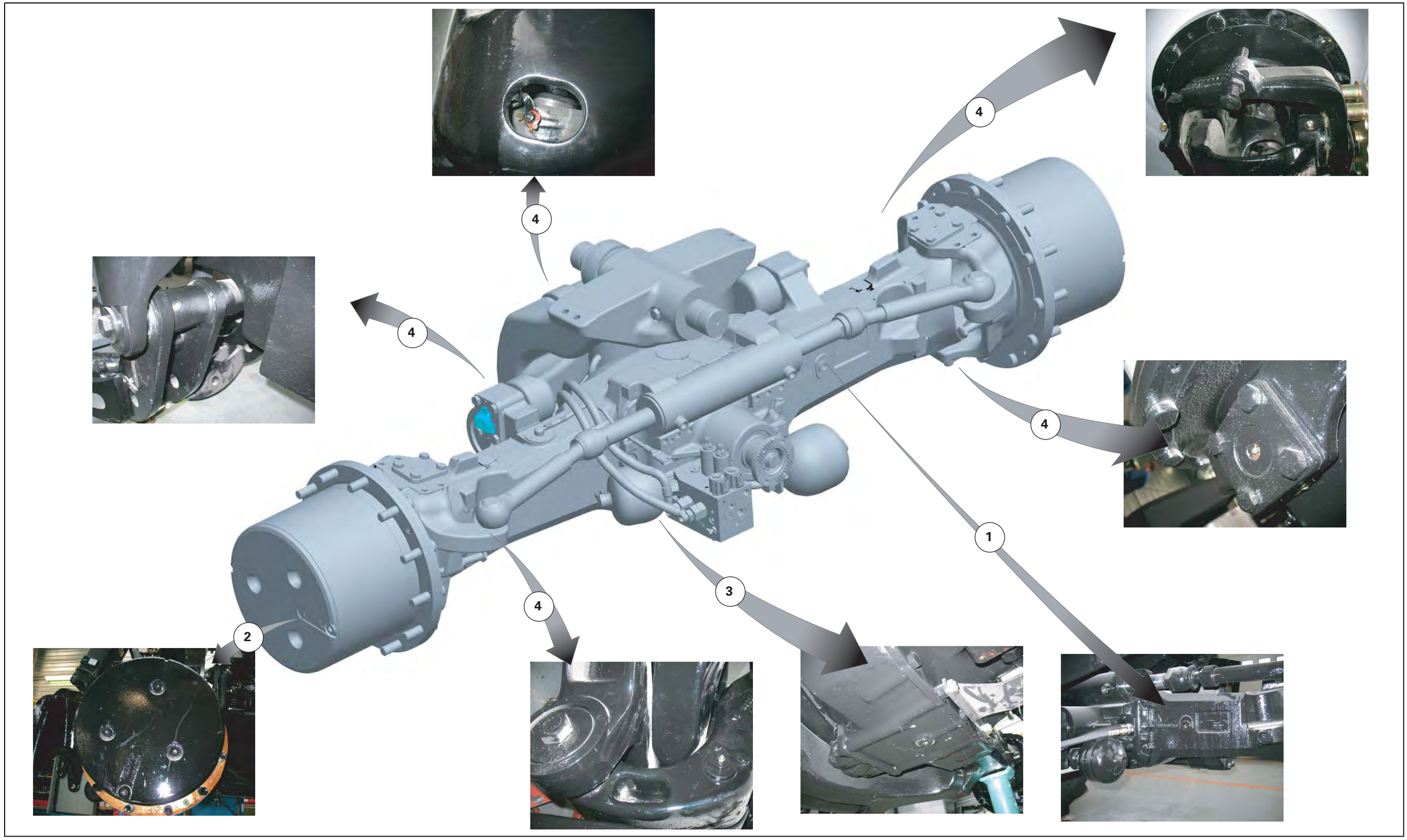

Fig. 6

A.4 Tightening torques

Reference	Description	Torque to apply according to axle model	
		770/504	770/612
(1)	Screw for steering pivot pins	163 Nm-202 Nm	
(2)	Screw for final drive cover plate	50 Nm	
(3)	Screw for final drive ring gear	68 Nm-75 Nm	
(4)	Screw for harness protective housing	9.5 Nm-10.5 Nm	
(5)	Final drive filler plug	90 Nm	
(6)	Steering ball joint, connecting rod-stub axle	170 Nm-190 Nm	
(7)	Steering rod	300 Nm-320 Nm	
(8)	Steering ball joint, ram-connecting rod	170 Nm-190 Nm	
(9)	Ram attachment screw	300 Nm-310 Nm	
(10)	Screw for differential housing cover plate	220 Nm-230 Nm	
(11)	Screw for differential ring gear	170 Nm-180 Nm	
(12)	Screw for stop	16 Nm-25 Nm	
(13)	Assembly screw for differential	68 Nm-75 Nm	
(14)	Assembly screw for differential	40 Nm-50 Nm	
(15)	Retaining nut for pinion	450 Nm-500 Nm	
(16)	Screw for differential bearing	160 Nm-170 Nm	

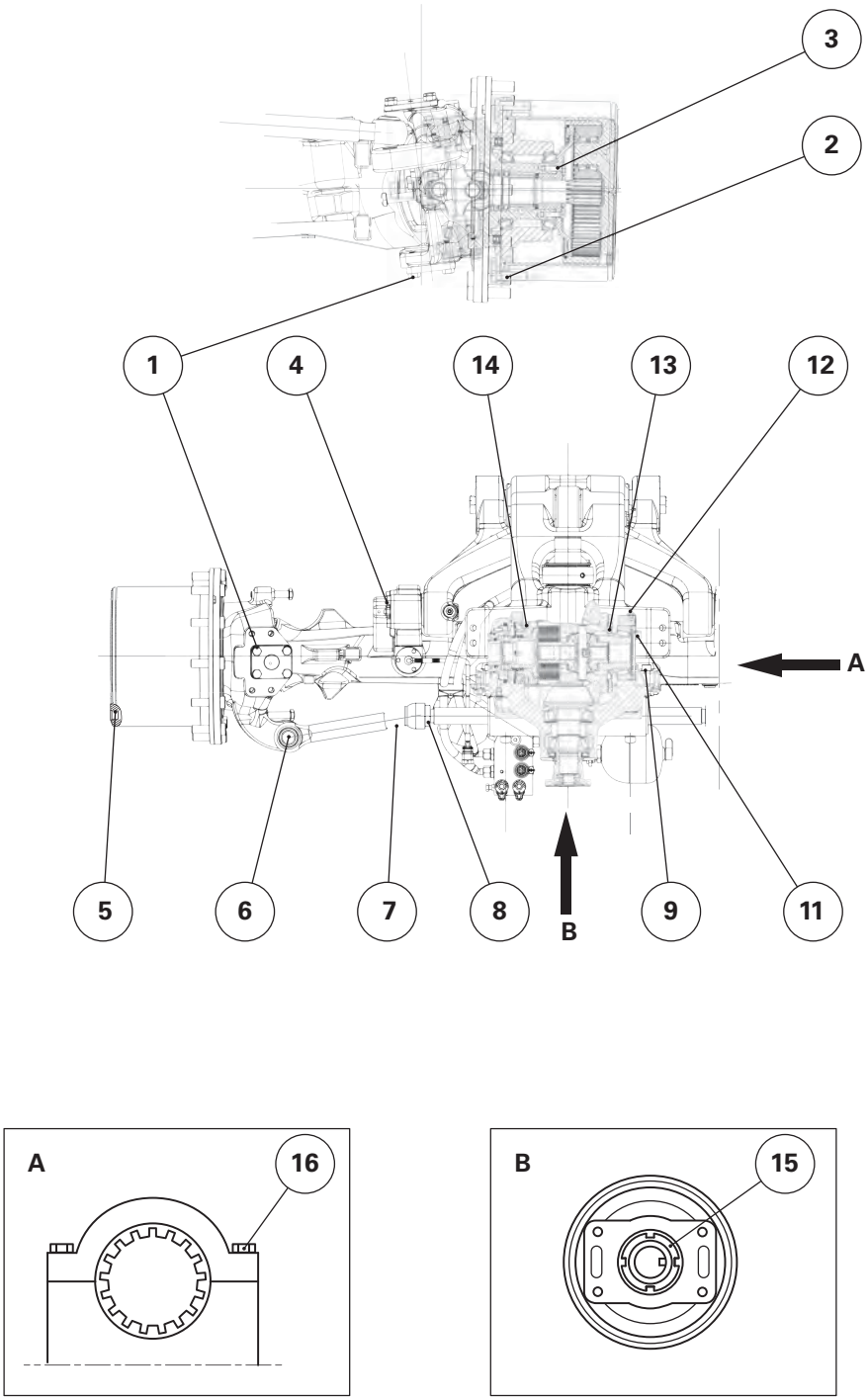

I007482

Fig. 7

A.5 Troubleshooting

Problem	Cause	Solution
Differential lock operating incorrectly	Problem in the electrical circuit or hydraulic system of the differential lock	See chapter on electricity and/or chapter on hydraulics
	Leaks from the differential lock piston (characterised by oil leaks at the axle or increase in the level of oil in the axle)	Inspect and repair the lock system
	Differential lock discs worn	Replace the discs
Noise during traction and under retention	Hub bearings damaged	Replace damaged parts
Noise louder during traction than under retention	Oil level insufficient	Top up oil
	Oil quality incorrect	Drain, rinse, then top up oil
	Crownwheel and pinion worn	Inspect and replace crownwheel and pinion
	Bearings of crownwheel and pinion worn	Replace damaged parts
	Final drive bearings or sun gears worn	Replace damaged parts
Noise louder under retention than during traction	Gear nut loose	Inspect crownwheel and pinion and the bearings. Check clearance. Adjust if necessary. If there is no damage, retighten the nut.
	Just one gear bearing is damaged	Replace damaged parts
Noise during steering	Differential sun gear and/or planet gears damaged	Replace damaged parts
A rubbing noise is produced during shifting	Universal joint damaged	Inspect and replace universal joint
	Wheel loose	Check for any damage to discs and wheel hub studs. Replace damaged parts if necessary and retighten wheel nuts.
	Swivel housing seal damaged	Replace damaged parts
	Planet gears moving freely in differential	Check via upper cover plate. Replace damaged parts
	Differential washers worn	Replace damaged parts
The front axle remains engaged	Problem in the electrical circuit or hydraulic system of the front axle engagement control	See chapter on electricity and/or chapter on hydraulics
	Leaks from the front axle clutch	Inspect and repair the clutch system
The front axle no longer engages	Front axle clutch discs worn	Replace the discs
Clicking noise when the front axle is under traction	Universal joint for front axle transmission shaft damaged	Inspect the transmission shaft and replace damaged parts
Steering no longer responding	Leaks from ram	Inspect the steering ram, hoses and Orbitrol. Replace damaged parts
	Orbitrol not working	Replace Orbitrol

Problem	Cause	Solution
Irregular tyre wear	Incorrect tyre dimension	Replace tyres with those of a suitable size
	Wheel alignment incorrect	Check and adjust the angle in line with the procedure given (see Final drives)
	Overloading, poor weight distribution on axle beam	Remove weights and check maximum permissible weight
	Incorrect use of the product	Replace damaged parts

B. Principles of operation

The front axle receives movement via the transmission shaft coming from the gearbox. The transfer of this movement is governed by a clutch, which is located between the gearbox and the transmission shaft. The cab control is electric, but the mechanical action on the clutch is hydraulic.
The transmission shaft drives the pinion from the crownwheel and pinion, which in turn drives the ring gear. This then transfers the movement through the differential, which drives the axle shafts and the epicyclic gear trains of the reduction units located in the final drives. The front wheels are then set in motion.
Differential locking is governed by a clutch in line with operator usage. The control is electric in the cab and hydraulic in the front axle.

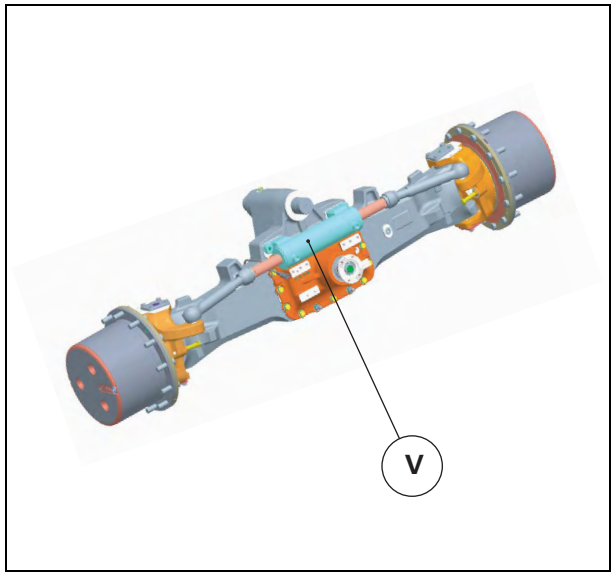

I007484 Fig. 8

Depending on the option fitted to the tractor, the front axle is either suspended (Fig. 9) or fixed (Fig. 8). The suspension is controlled from the cab, where it is activated/deactivated as required. A system comprising 6 solenoid valves and 2 accumulators (actuated by an electronic controller) control the height of the suspension and the damping quality.

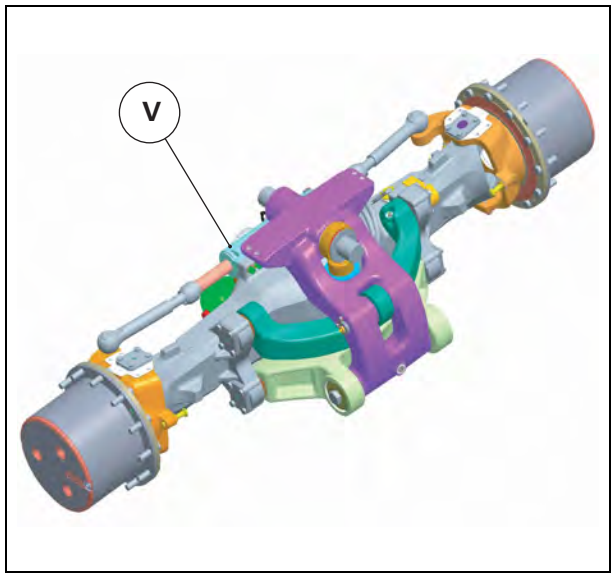

I007485 Fig. 9

A double-acting ram (V) provides the steering. This is controlled by a steering unit with an electrohydraulic valve (Fig. 10). This unit provides the following applications:

- Auto-Guide
- SpeedSteer
- Active/inactive steering

The steering unit is supplied by a main pump (single-stage 315 cc steering pump) and a steering standby pump for when the steering unit is subjected to vigorous actuation (SpeedSteer).

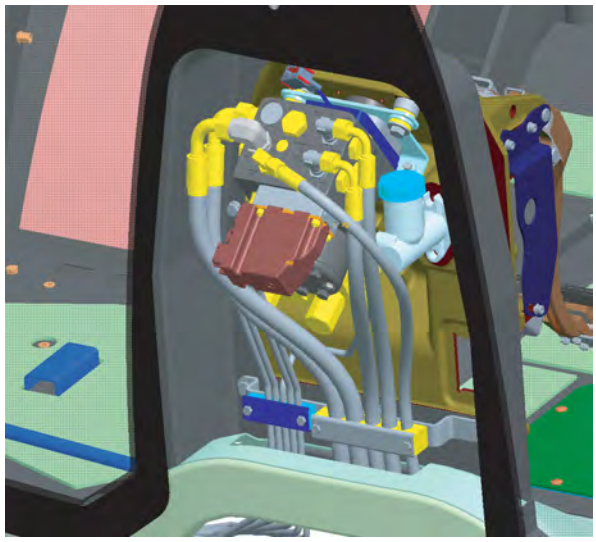

I007486

Fig. 10

8A11

DANA770 - Error codes

TABLE OF CONTENTS

A. Reading error codes

	ERROR CODES DISPLAYED ON THE INSTRUMENT PANEL			
	DISPLAY with Dash Control Center			DISPLAY without Dash Control Center
Instrument panel		+	Letter D (Dashboard)	Letter D (Dashboard)
Engine		+	Letter E (Engine)	Letter E (Engine)
SCR system	no icon		Letter U (Urea)	Letter U (Urea)
Transmission/4WD/PTO		+	Letter T (Transmission)	Letter T (Transmission)
Lights module		+	Letter L (Light)	Letter L (Light)
ParkLock		+	Letter P (ParkLock)	Letter P (ParkLock)
Front axle		+	Letters FA (Front Axle)	Letters FA (Front Axle)
Linkage		+	Letters R (Linkage)	Letter R (Linkage)
Electrohydraulic		+	Letters H (Hydraulics)	Letter H (Hydraulics)
Cab		+	Letters C (Cab)	Letter C (Cab)
Auto-Guide		+	Letters A (Auto-Guide)	Letter A (Auto-Guide)
Control Arm		+	Letters AR (ARmrest)	Letter AR (ARmrest)

	OTHER DISPLAYS
Automatic air conditioning	Displayed on the air conditioning module.

B. Suspended front axle error codes

No.		Components concerned	Causes
FA	211	**X178** - ParkLock/suspended front axle/passive suspended cab Autotronic 5	Calibration fault
FA	221	**X166** - Suspended front axle position sensor	Sensor value too high
FA	222		Sensor value too low
FA	224		Calibration too low
FA	225		Calibration too high
FA	231	**X154** - Suspended front axle lifting solenoid valve	Open circuit
FA	232		Short circuit to +12 V
FA	233		Short circuit to earth (-)
FA	234	**X159** - Suspended front axle lowering solenoid valve	Open circuit
FA	235		Short circuit to +12 V
FA	236		Short circuit to earth (-)
FA	237	**X161** - Solenoid valve 1 for suspended front axle suspension	Open circuit
FA	238		Short circuit to +12 V
FA	239		Short circuit to earth (-)
FA	241	**X139** - Suspended front axle switch	Short circuit

8A12

DANA770 - Diagrams and plans

TABLE OF CONTENTS

A. Plans

A.1 Overall dimensions: fixed axle

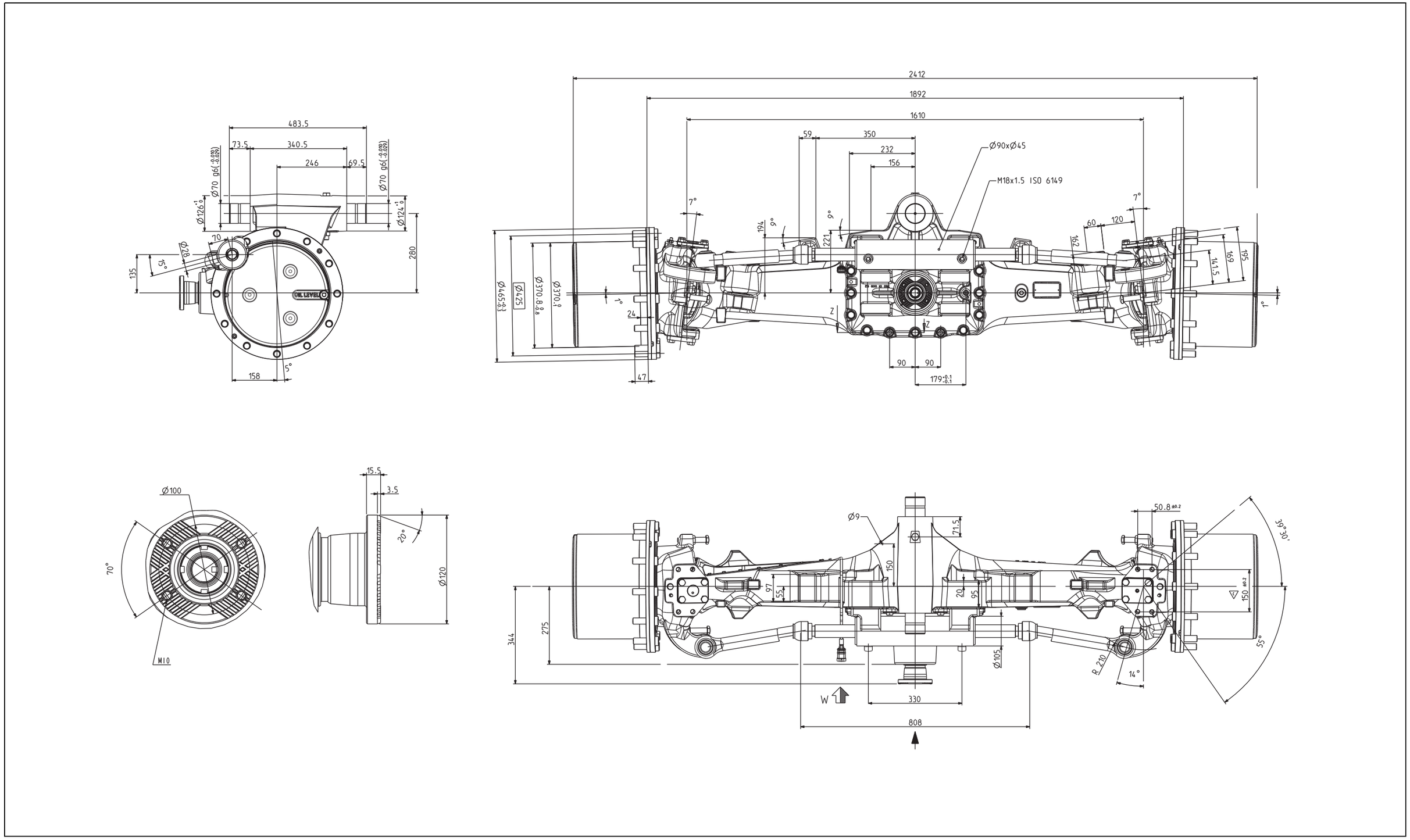

Fig. 1

A.2 Overall dimensions: suspended axle

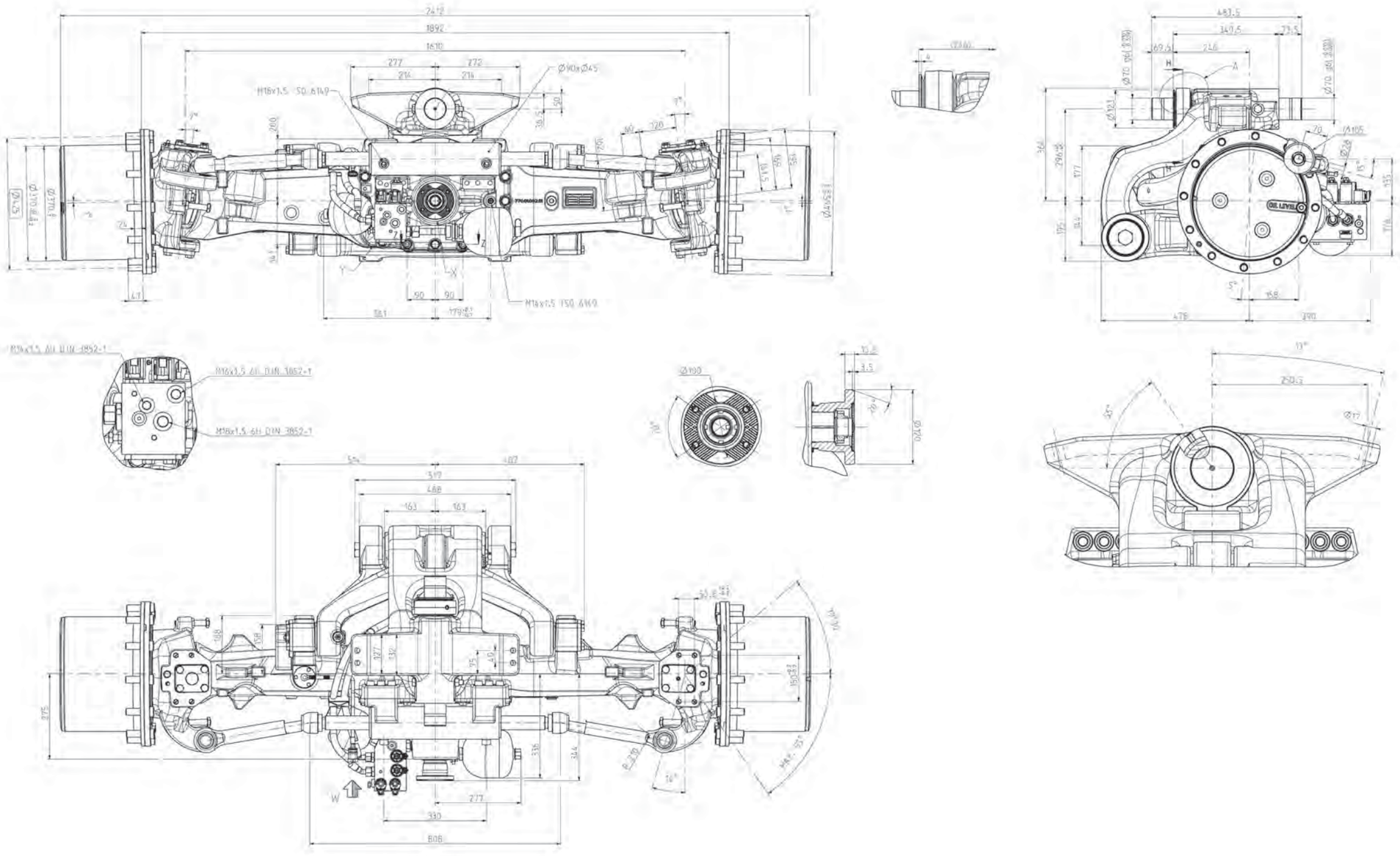

Fig. 2

A.3 Tightening torques and preloads: fixed axle - view of the assembly

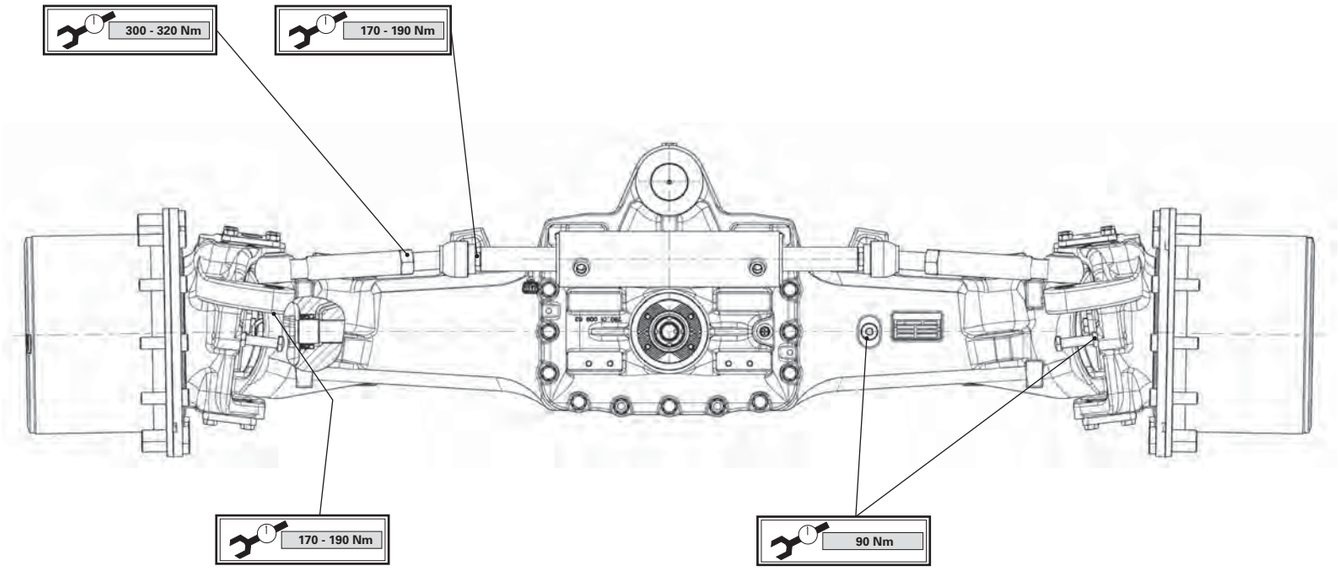

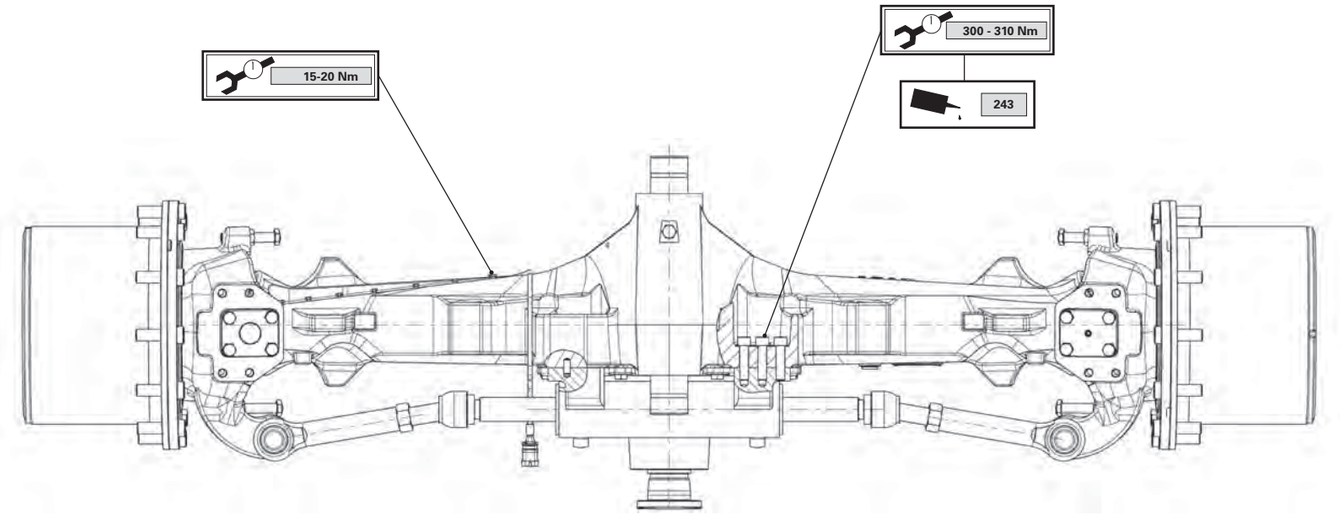

Fig. 3

A.4 Tightening torques and preloads: fixed axle - detailed views

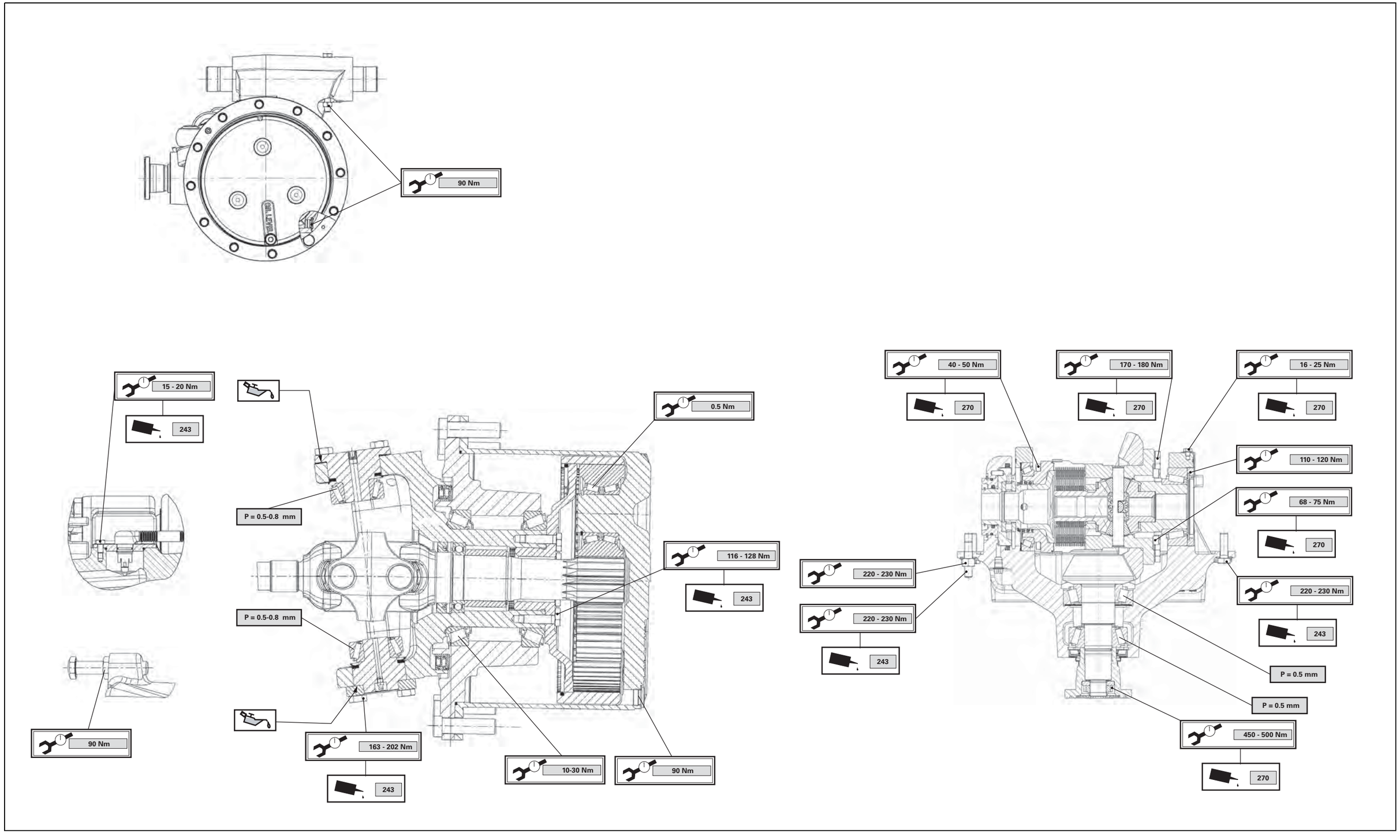

Fig. 4

A.5 Tightening torques and preloads: suspended axle - view of the assembly

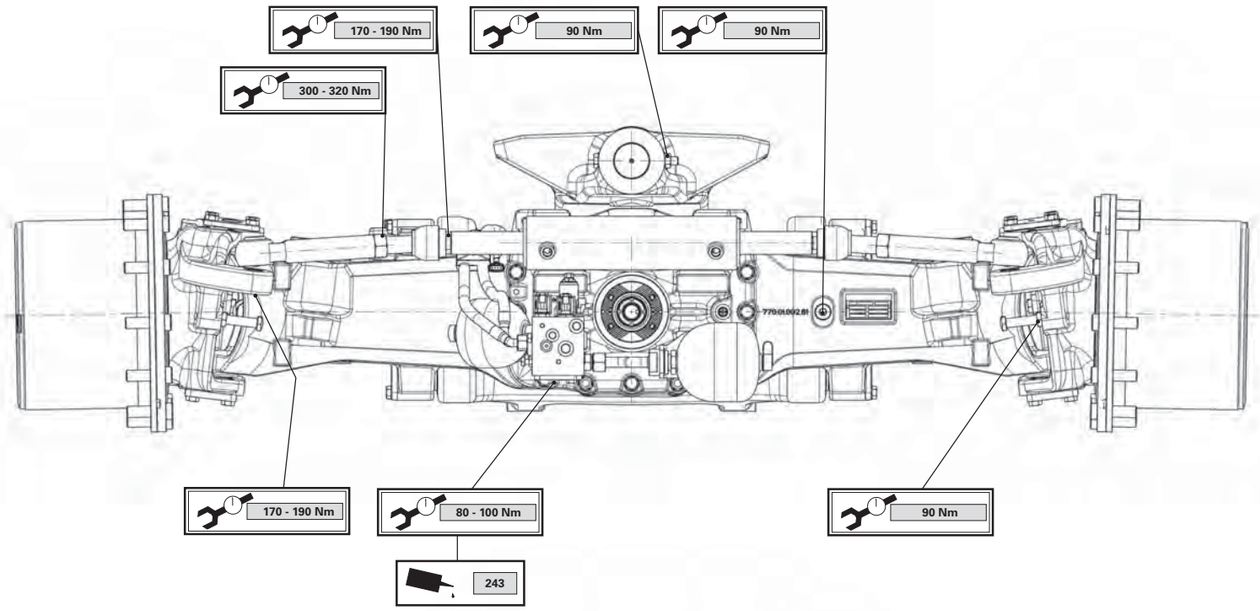

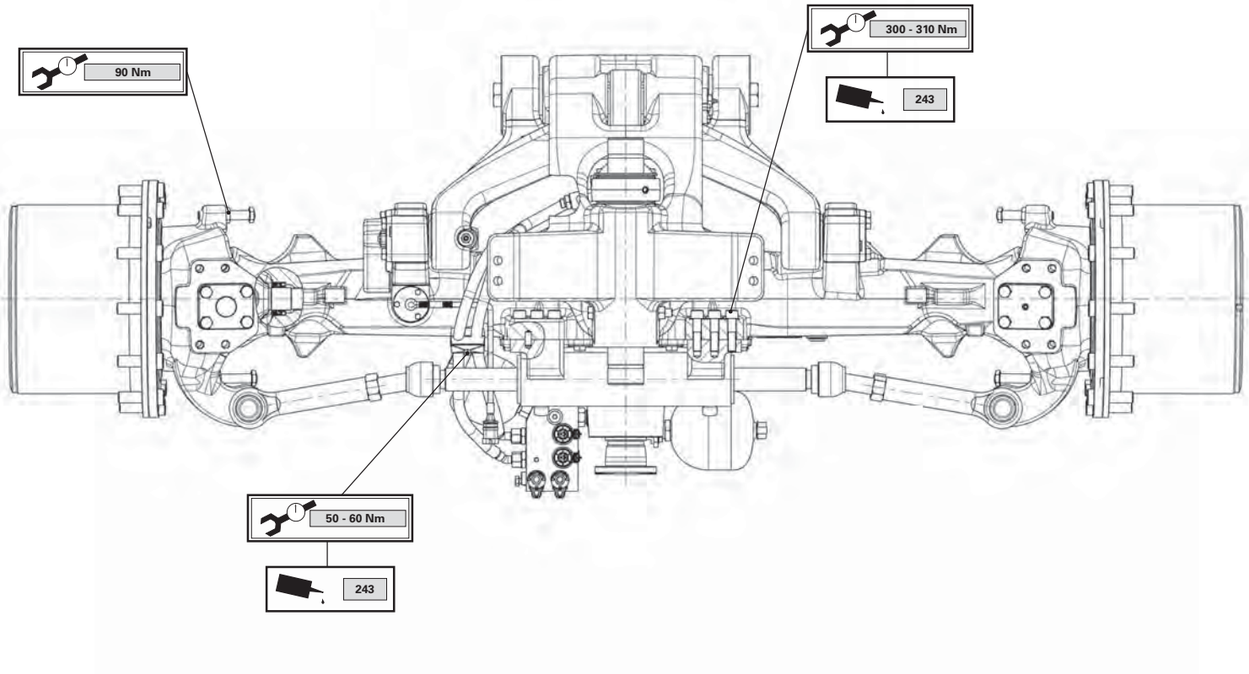

Fig. 5

A.6 Tightening torques and preloads: suspended axle - detailed views

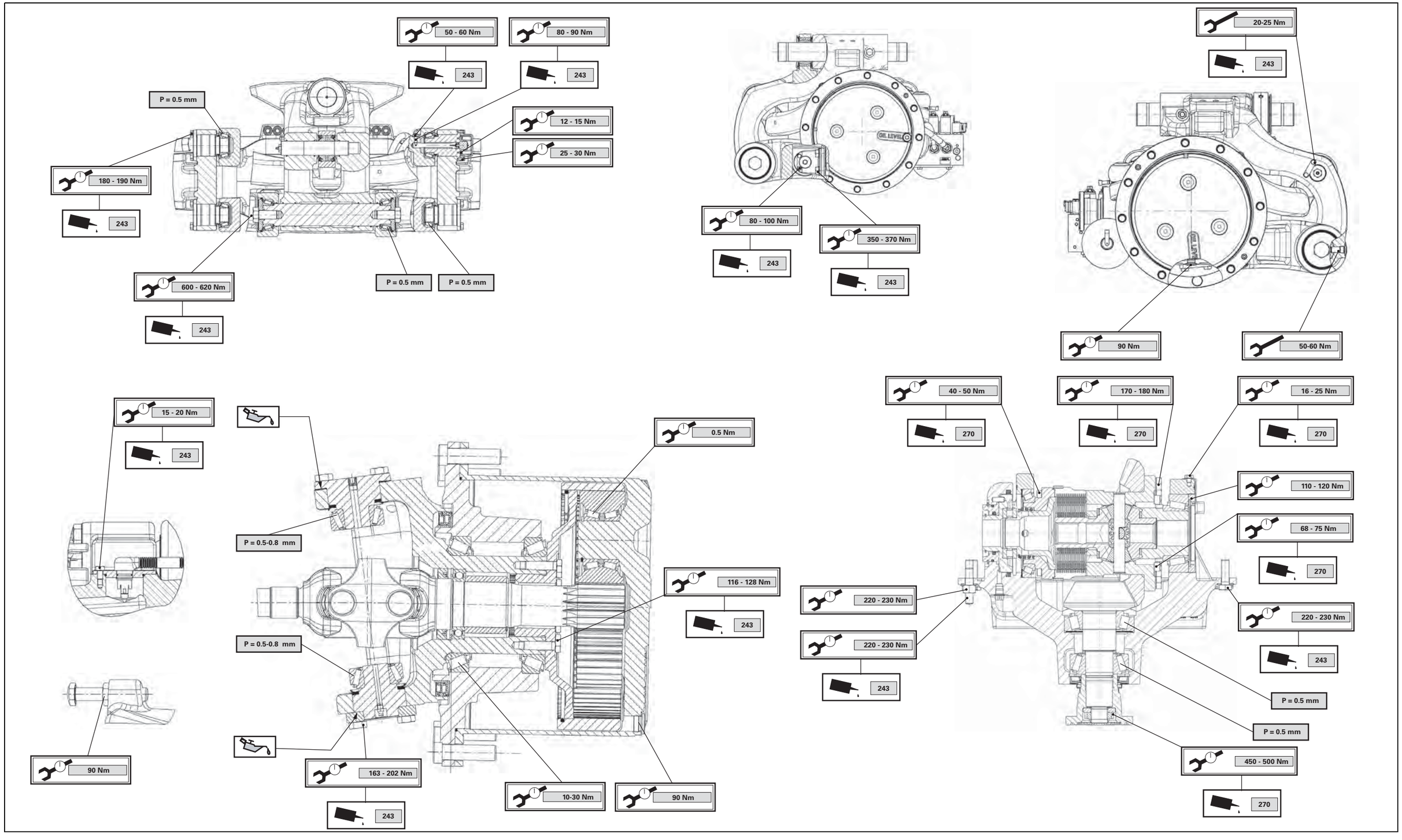

Fig. 6

B. Suspended front axle hydraulics diagram

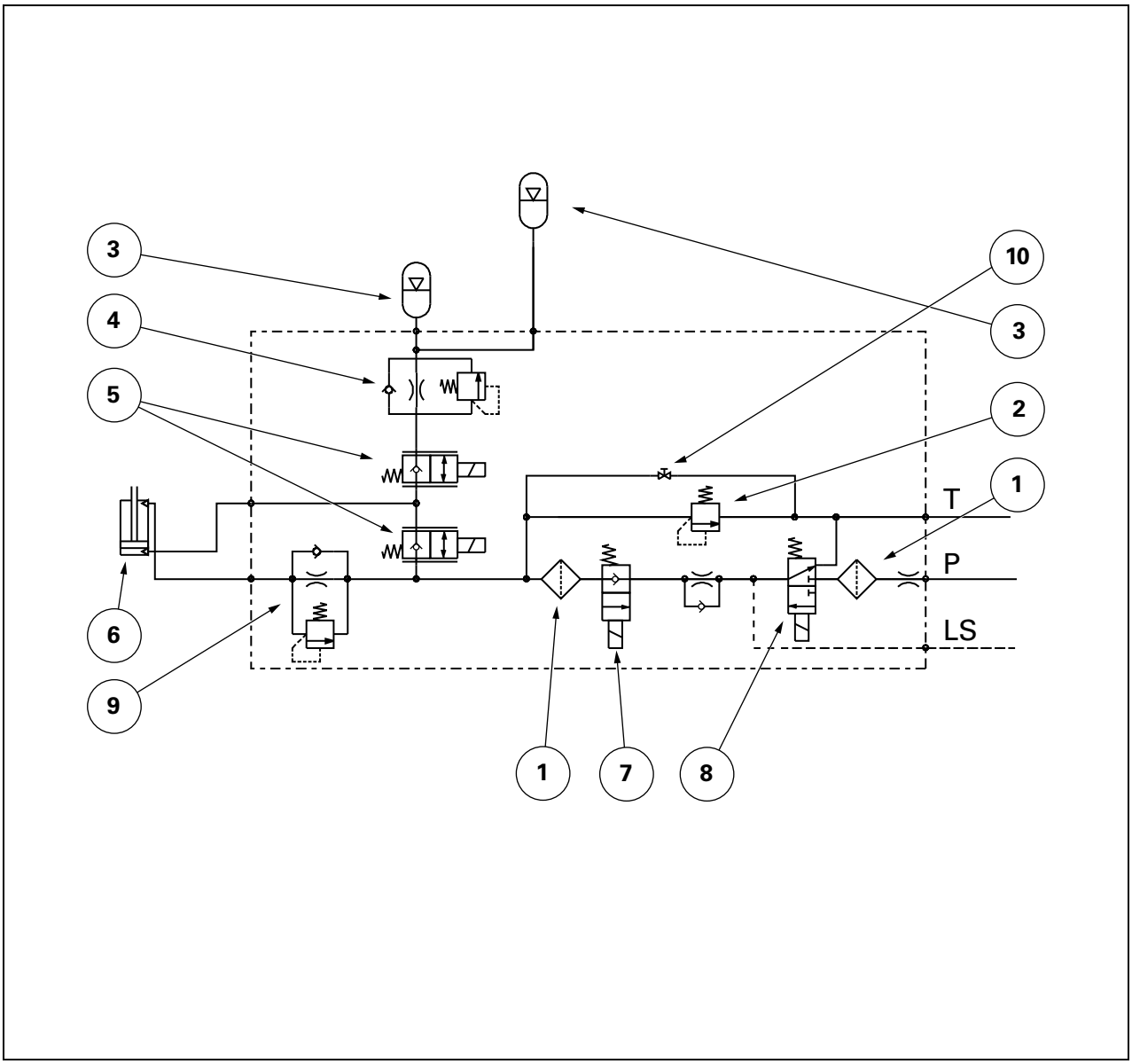

I006268

Fig. 7

(1) Filter
(2) Pressure relief valve (210 bar)
(3) Accumulators
(4) Compression shock absorber
(5) Lock solenoid valve
(6) Suspension ram
(7) Lowering solenoid valve
(8) Lifting solenoid valve
(9) Release shock absorber
(10) Drain screw (for use during maintenance)

C. Electrical diagrams

C.1 Identification of electrical connectors and harnesses

Identification of electrical connectors
X1 - Auxiliary hydraulic oil temperature sensor
X2 - Auxiliary hydraulic oil filter blockage switch
X3 - 540 rpm PTO speed solenoid valve
X4 - 1000 rpm PTO speed solenoid valve
X5 - 4WD solenoid valve
X6 - Differential lock solenoid valve
X7 - Rear PTO solenoid valve
X8 - Bevel gear theoretical speed sensor
X9 - Transmission oil high pressure sensor 1
X10 - Collecting shaft speed sensor
X11 - Solenoid valve limiting speed to 30 kph
X12 - Coupler function solenoid valve
X13 - Hare range solenoid valve
X14 - Tortoise range solenoid valve
X15 - PTO clutch speed sensor
X16 - PTO shaft speed sensor
X17 - Hare/Tortoise range position sensor
X18 - Transmission control module
X19 - Transmission hydraulic oil temperature sensor
X20 - Transmission filter blockage switch
X21 - ParkLock brake pressure sensor
X22 - Radar
X23 - Steering pressure sensor
X24 - Auxiliary hydraulic oil gauge
X25 - Engine speed sensor
X26 - Pneumatic brake solenoid valve
X27 - Rear linkage lifting solenoid valve
X28 - Rear linkage lowering solenoid valve
X29 - Dual Control socket connector
X30 - Rear linkage position sensor
X31 - Rear linkage right-hand draft sensor
X32 - Rear linkage left-hand draft sensor
X33 - Transmission harness CAN junction
X34 - Transmission oil high pressure sensor 2
X35 - ParkLock hydraulic system pressure sensor
X36 - LS signal breaker solenoid valve
X37 - ParkLock pressure reversing solenoid valve
X38 - Trailer braking proportional solenoid valve
X39 - Trailer braking safety solenoid valve
X40 - Front linkage single/double acting function solenoid valve
X41 - Divider solenoid valve 1
X42 - Divider solenoid valve 2
X43 - Auto-hitch lifting solenoid valve
X44 - Auto-hitch lowering solenoid valve
X45 - Bleed for pneumatic suspended cab front and rear systems
X46 - Rear left-hand ram position sensor for cab suspension
X47 - Rear right-hand unit for suspended cab
X48 - Rear left-hand unit for suspended cab
X49 - Suspended cab rear lowering solenoid valve
X50 - Suspended cab front lowering solenoid valve
X51 - Transmission harness earth (chassis)

X52 - Engine harness/transmission harness junction
X53 - Cab transmission harness/transmission harness junction
X54 - Suspended cab lifting solenoid valve
X55 - Instrument panel
X56 - Power Control lever
X57 - DOT Matrix keyboard
X58 - Windscreen wiper and indicator control unit
X59 - DOT Matrix keyboard connection on instrument panel
X60 - Engine harness/instrument panel harness junction
X61 - Cab transmission harness/engine harness junction
X62 - Instrument panel harness/cab transmission harness junction
X63 - Instrument panel harness connection on fuse box
X64 - Instrument panel harness connection on fuse box
X65 - Front windscreen wiper motor
X66 - Left-hand brake pedal sensor
X67 - Right-hand brake pedal sensor
X68 - Clutch pedal sensor
X69 - Cab interior temperature sensor
X70 - Solar radiation sensor
X71 - Throttle pedal sensor
X72 - ParkLock switch on Power Control lever
X73 - Buzzer Control
X74 - Buzzer Supply (+12 V APC)
X75 - Pillar harness/right-hand fender harness junction
X76 - Rear right-hand indicator
X77 - Rear right-hand side light and stop light
X78 - Work light on rear right-hand fender
X79 - -
X80 - -
X81 - -
X82 - -
X83 - -
X84 - -
X85 - -
X86 - -
X87 - Linkage lifting/lowering switch on right-hand fender
X88 - Rear right-hand NA indicator extension
X89 - Earth (chassis)
X90 - Pillar harness/left-hand fender harness junction
X91 - Rear left-hand indicator
X92 - Rear left-hand side light and stop light
X93 - Work light on rear left-hand fender
X94 - PTO ON/OFF switch on left-hand fender
X95 - PTO Stop switch on left-hand fender
X96 - Hydraulic spool valve switch on left-hand fender
X97 - Linkage lifting/lowering switch on left-hand fender
X98 - Rear left-hand NA indicator extension
X99 - PTO and linkage console harness/cab transmission harness junction
X100 - Instrument panel harness earth (chassis)
X101 - Instrument panel harness/electric rear-view mirror harness junction
X102 - Right-hand fender lighting harness/trailer connector harness junction
X103 - Armrest harness/cab transmission harness junction
X104 - Armrest Autotronic 5
X105 - Datatronic CCD

X106 - Transmission lever in armrest
X107 - Headland mode switch (headland function)
X108 - FingerTIP 3
X109 - FingerTIP 4
X110 - FingerTIP 5
X111 - DTM dynamic transmission mode switch
X112 - Joystick
X113 - Armrest 6-button keyboard
X114 - Supply on fuse box for 3rd spool valve
X115 - Supply on fuse box for 4th spool valve
X116 - +12 V battery supply (for lighting module)
X117 - Isobus +12 V battery power socket
X118 - Automatic PTO switch
X119 - Rear linkage lifting/lowering switch
X120 - Datatronic CCD navigation keyboard
X121 - Rear linkage height/depth adjustment thumb wheel
X122 - Hand throttle
X123 - Hare/Tortoise range shift switch
X124 - Pedal/lever mode switch
X125 - SV1 speed setting potentiometer
X126 - SV2 speed setting potentiometer
X127 - Front PTO ON/OFF switch
X128 - Rear PTO ON/OFF switch
X129 - Fuse box +12 V battery connection
X130 - FingerTIP 6 front linkage function
X131 - Front linkage suspension solenoid valve
X132 - Instrument panel harness/armrest harness junction
X133 - Console harness/cab transmission harness junction
X134 - Console harness/pillar harness junction
X135 - Braking pressure sensor
X136 - Differential lock switch
X137 - 4WD switch
X138 - Hazard warning lights indicator light and switch
X139 - Suspended front axle switch
X140 - Suspended front axle setting potentiometer
X141 - Suspended cab switch
X142 - Suspended cab setting potentiometer
X143 - Variable steering switch (fast steering)
X144 - Variable steering setting potentiometer (fast steering)
X145 - PTO/linkage console
X146 - Rear linkage suspension switch
X147 - Roof harness/pillar harness junction
X148 - Roof harness/pillar harness junction
X149 - Headlights module (black connector)
X150 - Pillar harness/cab power socket harness junction
X151 - Pillar harness/cab power socket harness junction
X152 - Start switch
X153 - Non-Isobus implement connector
X154 - Suspended front axle lifting solenoid valve
X155 - Cigarette lighter socket (power)
X156 - Cigarette lighter socket (backlighting)
X157 - Left-hand side +12 V socket (power)
X158 - Left-hand side +12 V socket (backlighting)
X159 - Suspended front axle lowering solenoid valve
X160 - Console harness earth (chassis)
X161 - Solenoid valve 1 for suspended front axle suspension

X162 - Pillar harness connection on fuse box
X163 - Solenoid valve 2 for suspended front axle suspension
X164 - Pillar harness/cab transmission harness junction
X165 - Automatic air conditioning harness/pillar harness junction
X166 - Suspended front axle position sensor
X167 - +12 V APC fuse box connection
X168 - Pneumatic brake system pressure sensor
X169 - Power socket control switch (in cab)
X170 - Pillar harness connection on fuse box
X171 - Cab transmission harness connection on fuse box
X172 - Cab transmission harness connection on fuse box
X173 - Cab transmission harness earth
X174 - Autotronic 4 transmission controller
X175 - Emergency control switch
X176 - Earth (Autotronic 4 transmission controller)
X177 - Autotronic 5 Linkage
X178 - ParkLock/suspended front axle/passive suspended cab Autotronic 5
X179 - Main lighting, sidelight/dipped light activation switch
X180 - Front windscreen washer pump
X181 - Front linkage single acting / double acting function switch
X182 - Linkage external lifting switch
X183 - Diagnostics connector (tractor-Isobus CAN)
X184 - Diagnostics connector (engine-valve CAN)
X185 - Sisu EEM unit
X186 - Starter
X187 - Engine start relay
X188 - Engine identification module (ID module)
X189 - Fuel lift pump
X190 - Vistronic fan
X191 - Diesel fuel preheater
X192 - B + alternator 1
X193 - B + alternator 2
X194 - D + alternator 1
X195 - D + alternator 2
X196 - In line fuse (225 A)
X197 - Diesel fuel gauge
X198 - Pneumatic trailer brake sensor
X199 - Work light on left-hand step
X200 - Work light on right-hand step
X201 - Engine harness earth
X202 - Front accessory connection socket harness/front function harness junction
X203 - Engine harness/front headlights harness junction
X204 - Cooling unit harness/engine harness junction
X205 - Front axle harness/engine harness junction
X206 - Sensor detecting water in the diesel fuel
X207 - Pneumatic seat adjustment control
X208 - Front linkage suspension switch LED
X209 - Rear linkage external lowering switch
X210 - Orbitrol steering sensor (SASA sensor)
X211 - Rear Dual Control connector
X212 - Instrument panel harness/armrest harness junction
X213 - Power socket for additional heating
X214 - Armrest harness/cab transmission harness junction

X215 - Trailer connector (right-hand side light and number plate lights)
X216 - Reversing light
X217 - Isobus CAN connector
X218 - External Isobus tool connector
X219 - Cab Isobus harness/external Isobus harness junction
X220 - Trailer connector (left-hand side light)
X221 - Trailer connector (right-hand indicator)
X222 - Trailer connector (left-hand indicator)
X223 - Trailer connector (brake lights)
X224 - Trailer connector (earth)
X225 - Trailer connector (reversing light)
X226 - Trailer connector harness earth
X227 - Console harness/cab transmission harness junction
X228 - Front linkage single/double-acting function LED
X229 - 120 Ohm CAN 1 resistor (cab transmission harness)
X230 - 120 Ohm CAN 2 resistor (cab transmission harness)
X231 - 120 Ohm CAN 3 resistor (cab transmission harness)
X232 - 120 Ohm CAN 4 resistor (cab transmission harness)
X233 - Cab transmission harness/Isobus harness junction
X234 - 120 Ohm CAN ATC resistor
X235 - Front axle steering sensor (WAS sensor)
X236 - Electrohydraulic Orbitrol (grey connector)
X237 - Electrohydraulic Orbitrol (black connector)
X238 - Connector 1 for valve harness
X239 - Connector 2 for valve harness
X240 - 120 Ohm resistor for electrohydraulic spool valves
X241 - Sisu engine preheating supply (Grid Heater)
X242 - Exhaust temperature sensor
X243 - AdBlue/DEF reservoir (urea) level gauge and temperature sensor
X244 - CAN SCR harness
X245 - +12 V APC supply for SCR
X246 - Auto-Guide external harness/engine harness junction
X247 - Roof harness/electric rear-view mirror harness junction
X248 - Right and left-hand electric rear-view mirror adjustment switch
X249 - External rear-view mirror defroster switch
X250 - Power socket in cab
X251 - In line fuse (225 A)
X252 - Automatic air conditioning condenser
X253 - Air filter vacuum sensor
X254 - Horn (earth)
X255 - Horn
X256 - Roof harness/hand rail harness junction
X257 - Side light and indicator on hand rail (right and left)
X258 - Main beam on hand rail (right and left)
X259 - Hand rail upper work light
X260 - Hand rail upper work light
X261 - Front right-hand unit for suspended cab
X262 - Front left-hand unit for suspended cab
X263 - Floating stop relay control (US front-end loader)

X264 - Front linkage suspension switch
X265 - Rear linkage suspension switch indicator light
X266 - Rear linkage diagnostic and lifting/lowering LEDs
X267 - Switch for left-hand side heater
X268 - Pillar harness connection on fuse box
X269 - Cab suspension harness/cab transmission harness junction
X270 - Front accessories connection socket (rotary beacon)
X271 - Front accessories connection socket (+12 V battery)
X272 - Front accessories connection socket (+12 V APC)
X273 - Front accessories connection socket (main beam light)
X274 - Front accessories connection socket (main beam light)
X275 - Front accessories connection socket (work light)
X276 - Earth for front accessory connection socket harness
X277 - Front linkage lifting/lowering external control
X278 - Front linkage lifting switch (external)
X279 - Dual Control or TIC position sensor
X280 - Front linkage rams pressure sensor
X281 - Solenoid valve for front PTO
X282 - Roof harness/cab Auto-Guide harness junction
X283 - TopDock
X284 - Headlights module keyboard
X285 - Ad Blue (urea) metering valve
X286 - Ad Blue (urea) injection valve
X287 - Ad Blue (urea) reservoir preheating valve
X288 - 12/24 V converter for SCR system
X289 - SCR management module
X290 - Front accessory connection socket harness/front function harness junction
X291 - Front accessory connection socket harness/front function harness junction
X292 - Front windscreen washer pump
X293 - 540 rpm PTO switch
X294 - 540 eco rpm PTO switch
X295 - 1000 rpm PTO switch
X296 - USB connector
X297 - PTO/linkage console backlighting
X298 - Headland mode switch (headland function)
X299 - Linkage lowering speed potentiometer
X300 - -
X301 - PTO stop switch on left-hand fender
X302 - Switch for pre-selected engine speed A
X303 - Switch for pre-selected engine speed B
X304 - Instrument panel harness/armrest harness junction
X305 - Headlights module (grey connector)
X306 - Switch for pre-selected engine speed A/B
X307 - FingerTIP 1
X308 - FingerTIP 2
X309 - SV1/SV2 speed regulator switch
X310 - Divider 1 indicator light and solenoid valve (earth)
X311 - Divider 2 indicator light and solenoid valve (+12 V)
X312 - SV1/SV2 speed setting potentiometer in armrest
X313 - Pedal/lever transmission control mode switch and DTM switch
X314 - Hydraulics switch 1, road/field mode

X315 - Hydraulics switch 2, road/field mode
X316 - Headland mode switch (headland function)
X317 - + battery supply for headlights module
X318 - Automatic air conditioning compressor
X319 - + battery supply for headlights module
X320 - + battery supply on headlights module
X321 - + battery supply on headlights module
X322 - + battery supply on headlights module
X323 - + battery supply on headlights module
X324 - +12 V APC fuse box connector (battery isolator switch)
X325 - Pillar harness / non-Isobus implement connector harness junction
X326 - Pillar harness / non-Isobus implement connector harness junction
X327 - Battery earth (chassis)
X328 - Battery isolator switch earth terminal
X329 - Battery isolator switch earth terminal
X330 - Battery negative terminal contact (battery isolator switch)
X331 - Pillar harness connection on fuse box
X332 - + battery (start switch)
X333 - Engine harness earth (chassis)
X334 - Battery isolator switch earth terminal
X335 - Battery isolator switch earth terminal
X336 - Battery isolator switch
X337 - Pneumatic brake ParkLock solenoid valve
X338 - Earth (battery isolator switch)
X339 - Pneumatic trailer braking solenoid valve
X340 - + terminal on battery for fuse box
X341 - Starter supply
X342 - Positive battery terminal
X343 - RS232 diagnostics connector for Auto-Guide
X344 - Isobus connector in cab
X345 - Supply for additional terminal (mitron unit)
X346 - Auto-Guide switch
X347 - Cab transmission harness connection on fuse box
X348 - Cab transmission harness connection on fuse box
X349 - -
X350 - Front right-hand grille work light
X351 - Front right-hand grille work light
X352 - Front right-hand grille work light
X353 - Front left-hand grille work light
X354 - Front left-hand grille work light
X355 - Front left-hand grille work light
X356 - Right-hand main beam and dipped light
X357 - Left-hand main beam and dipped light
X358 - Outside temperature sensor
X359 - Cab suspension harness/cab transmission harness junction
X360 - Pillar harness connection on fuse box
X361 - Pillar harness connection on fuse box
X362 - Fuse box (+12 V battery)
X363 - Auto-hitch (Dromone) switch
X364 - 120 Ohm resistor for Auto-Guide/Isobus CAN network
X365 - Hand rail lower work light
X366 - Pneumatic brake harness / transmission harness junction
X367 - Switch 1 on joystick
X368 - Switch 2 on joystick

X369 - Engine speed + switch
X370 - Engine speed - switch
X371 - Engine speed stop switch
X372 - Orbitrol safety solenoid valve
X373 - Left-hand 12 V socket (cab) (power)
X374 - Left-hand 12 V socket (cab) (backlighting)
X375 - Instrument panel harness/cab transmission harness junction
X376 - Fuse box (reserve for + APC)
X377 - Fuse box (supply for cab suspension compressor)
X378 - FNRP lever and button
X379 - Front left-hand work light on roof
X380 - Front right-hand work light on roof
X381 - Front left-hand work light on roof
X382 - Front right-hand work light on roof
X383 - Front left-hand roof indicator
X384 - Front right-hand roof indicator
X385 - Rear left-hand work light on roof
X386 - Rear right-hand work light on roof
X387 - Rear left-hand work light on roof
X388 - Rear right-hand work light on roof
X389 - Rear left-hand work lights
X390 - Rear right-hand work lights
X391 - Rear left-hand roof indicator
X392 - Rear right-hand roof indicator
X393 - Earth
X394 - Radio aerial connector
X395 - Radio supply
X396 - Radio speaker connector
X397 - Front left-hand speaker
X398 - Front right-hand speaker
X399 - Rear left-hand speaker (+ supply)
X400 - Rear right-hand speaker (+ supply)
X401 - Rear left-hand speaker (- supply)
X402 - Rear right-hand speaker (- supply)
X403 - Rear windscreen wiper motor
X404 - Door switch
X405 - Interior light (earth)
X406 - Interior light (control)
X407 - Interior light (+12 V battery supply)
X408 - Right-hand console light
X409 - Left-hand rotary beacon
X410 - Right-hand rotary beacon
X411 - Rear windscreen wiper switch
X412 - Radio aerial
X413 - Earth (aerial)
X414 - Left-hand number plate light
X415 - Right-hand number plate light
X416 - Radio supply
X417 - Radio speaker connector
X418 - Earth
X419 - Earth
X420 - Rotary beacon harness earth (chassis)
X421 - Earth
X422 - Roof harness earth (chassis)
X423 - Left-hand side fan ON/OFF switch
X424 - Fan speed control knob
X425 - Air conditioning switch
X426 - Air conditioning indicator light
X427 - Manual air conditioning module
X428 - Electronic thermostat for heating

X429 - Speed 1relay for fan
X430 - Speed 2relay for fan
X431 - Speed 3relay for fan
X432 - Speed 4relay for fan
X433 - Left-hand heating resistor
X434 - Right-hand fan
X435 - Left-hand fan
X436 - Left-hand side fan switch
X437 - Relay for left-hand side fan
X438 - Earth (automatic air conditioning)
X439 - Air conditioning control module (blue connector)
X440 - Air conditioning control module (yellow connector)
X441 - Heating temperature sensor
X442 - TT2 sensor
X443 - Evaporator temperature sensor
X444 - Right-hand fan adapter module (signal)
X445 - Left-hand fan adapter module
X446 - Right-hand fan adapter module (supply)
X447 - Left-hand fan adapter module (supply)
X448 - Separation harness for automatic air conditioning
X449 - Motor for left-hand heating shutter
X450 - Motor for right-hand heating shutter
X451 - Motor for heating mixer shutter
X452 - Relay for heater pump
X453 - Heater accelerator pump
X454 - Earth (roof)
X455 - Roof harness earth
X456 - Solar panel
X457 - Earth (Auto-Guide)
X458 - Cab transmission harness/pillar harness junction
X459 - Linkage lifting switch on fender
X460 - Linkage lowering switch on fender
X461 - Pillar harness/TECU harness junction
X462 - Supply indicator light for power socket on pillar
X463 - Earth (Isobus)
X464 - Pillar harness/armrest harness junction
X465 - Battery positive terminal contact
X466 - Active suspended cab Autotronic 5
X467 - Right-hand electric rear-view mirror
X468 - Left-hand electric rear-view mirror
X469 - Additional fan connection
X470 - Operator presence in seat switch
X471 - Suspended cab harness connection

Identification of harnesses
FAI200 - Engine harness
FAI201 - Front headlights harness
FAI202 - Suspended front axle harness
FAI203 - Transmission harness
FAI204 - Cab/platform linkage external harness
FAI205 - Electrohydraulic valves harness
FAI206 - Transmission harness — PTO
FAI207 - Front Dual Control harness
FAI208 - Linkage with Dual Control and TIC harness
FAI209 - Instrument panel harness
FAI210 - Cab transmission harness
FAI211 - Cab linkage harness
FAI212 - Lighting harness
FAI213 - Cab interior lighting harness
FAI214 - Armrest harness

FAI215 - Pillar harness
FAI216 - Diagnostics connector harness
FAI217 - Datatronic 3 harness
FAI218 - Fieldstar harness
FAI219 - Cab interior power socket harness
FAI220 - BOC harness — safety switch
FAI221 - Automatic air conditioning harness — instrument panel
FAI222 - Autotronic 5 ParkLock/suspended front axle harness
FAI223 - Roof harness
FAI224 - Hand rail lighting harness
FAI225 - Electric rear-view mirror harness
FAI226 - Roof/external harness
FAI227 - Automatic air conditioning harness - roof
FAI228 - Number plate lighting harness
FAI229 - Xenon light adapter harness
FAI230 - GSPTO harness
FAI231 - Transmission harness — ParkLock
FAI232 - Radio harness
FAI235 - Front accessory connection socket harness
FAI236 - Start-up harness
FAI237 - +12 APC fuse box harness
FAI238 - +12 APC instrument panel harness
FAI239 - Permanent +12 V supply harness
FAI240 - +12 V permanent fuse box harness
FAI241 - Automatic air conditioning adapter harness
FAI242 - Main beams on hand rail adapter harness
FAI243 - Circuit breaker harness
FAI244 - Linkage external controls extension harness
FAI245 - Left-hand linkage external controls harness
FAI246 - Right-hand linkage external controls harness
FAI247 - PTO shunt harness
FAI248 - Linkage external controls harness
FAI249 - Suspended front axle harness
FAI250 - Engine harness
FAI251 - Parking brake harness
FAI252 - +12 V battery harness
FAI253 - Hand rail harness
FAI254 - Windscreen wiper harness
FAI255 - Windscreen wiper harness
FAI256 - High-visibility roof heating harness
FAI257 - High-visibility roof heating harness
FAI258 - Roof earth harness
FAI260 - Cooling unit harness
FAI261 - Isobus harness
FAI262 - Auto-Guide engine harness
FAI263 - Auto-Guide cab adapter harness
FAI265 - Pneumatic brake harness
FAI267 - Console harness
FAI268 - Front function harness
FAI271 - Cab electric rear-view mirror harness
FAI272 - Active suspended cab harness
FAI273 - Front linkage harness
FAI274 - Rear right-hand lighting harness
FAI275 - Trailer connector harness
FAI276 - Rear left-hand lighting harness
FAI280 - Negative battery harness
FAI281 - Negative battery harness
FAI282 - Negative battery harness
FAI283 - TopDock harness

FAIxxx - Non-Isobus tool connector harness
FAIxxx - Non-Isobus implement connector controller harness
FAIxxx - Additional fan harness

C.2 Fuse box supply with circuit breaker

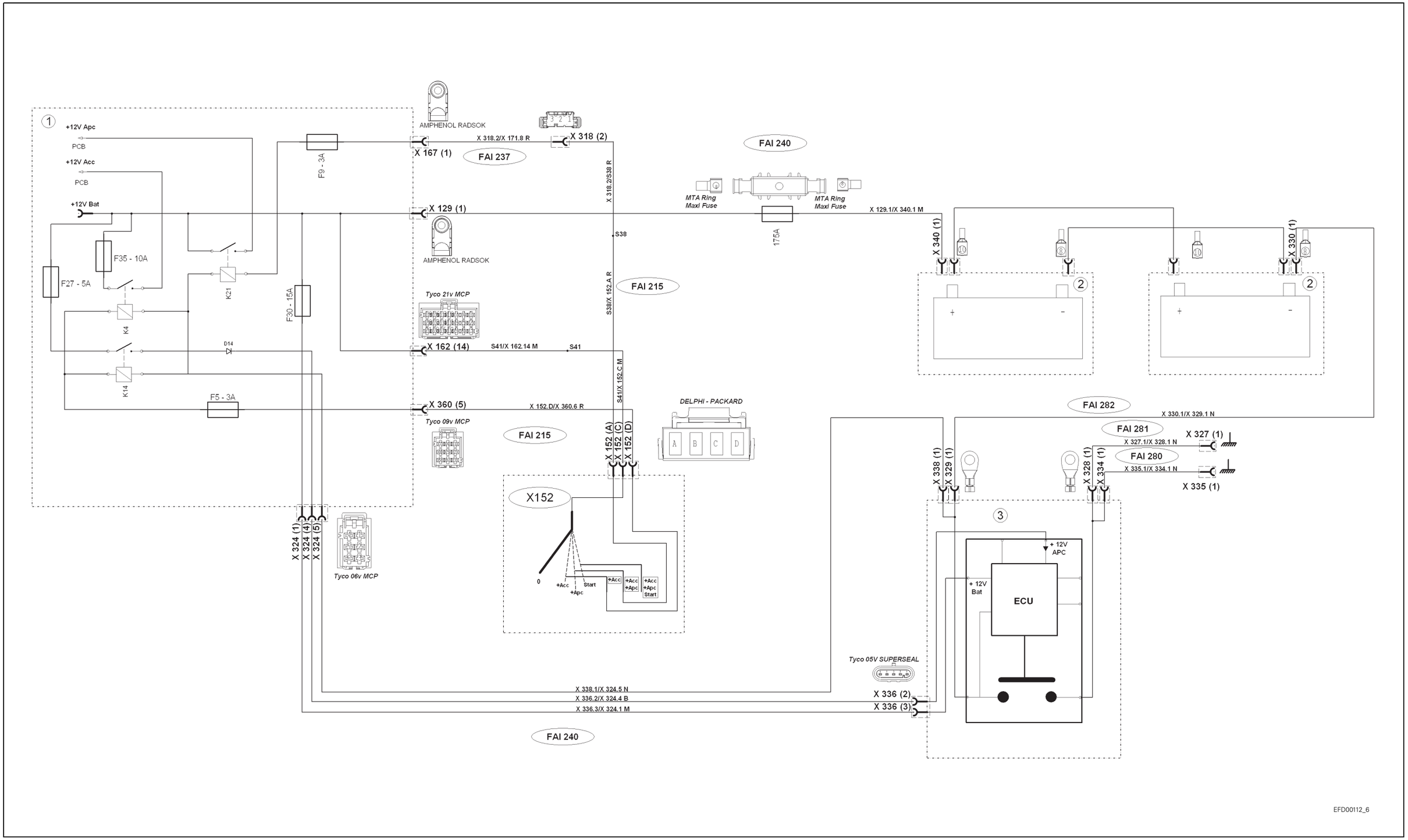

Fig. 8

C.3 Autotronic 4 electrical power supply

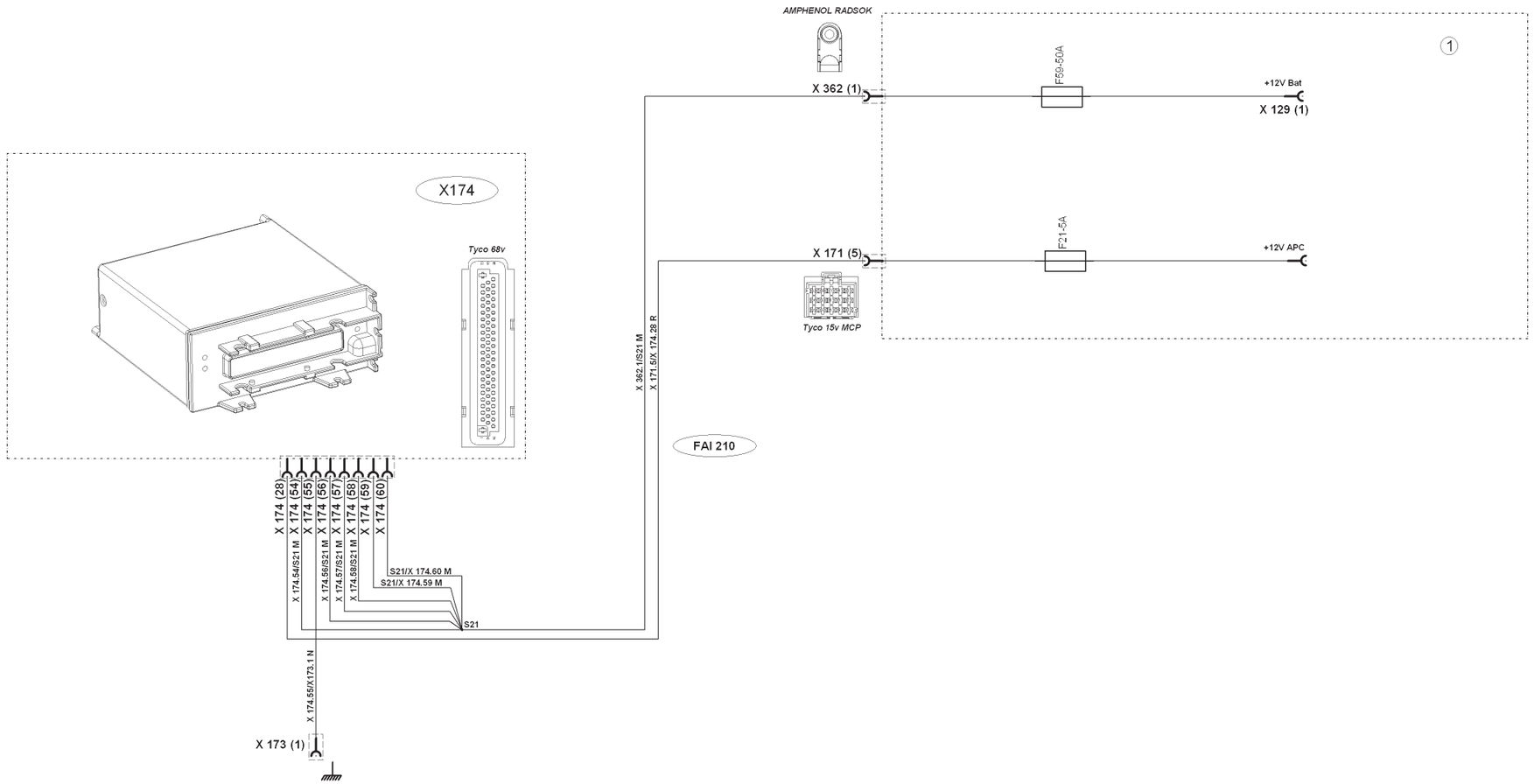

Fig. 9

C.4 Autotronic 5 linkage electrical power supply

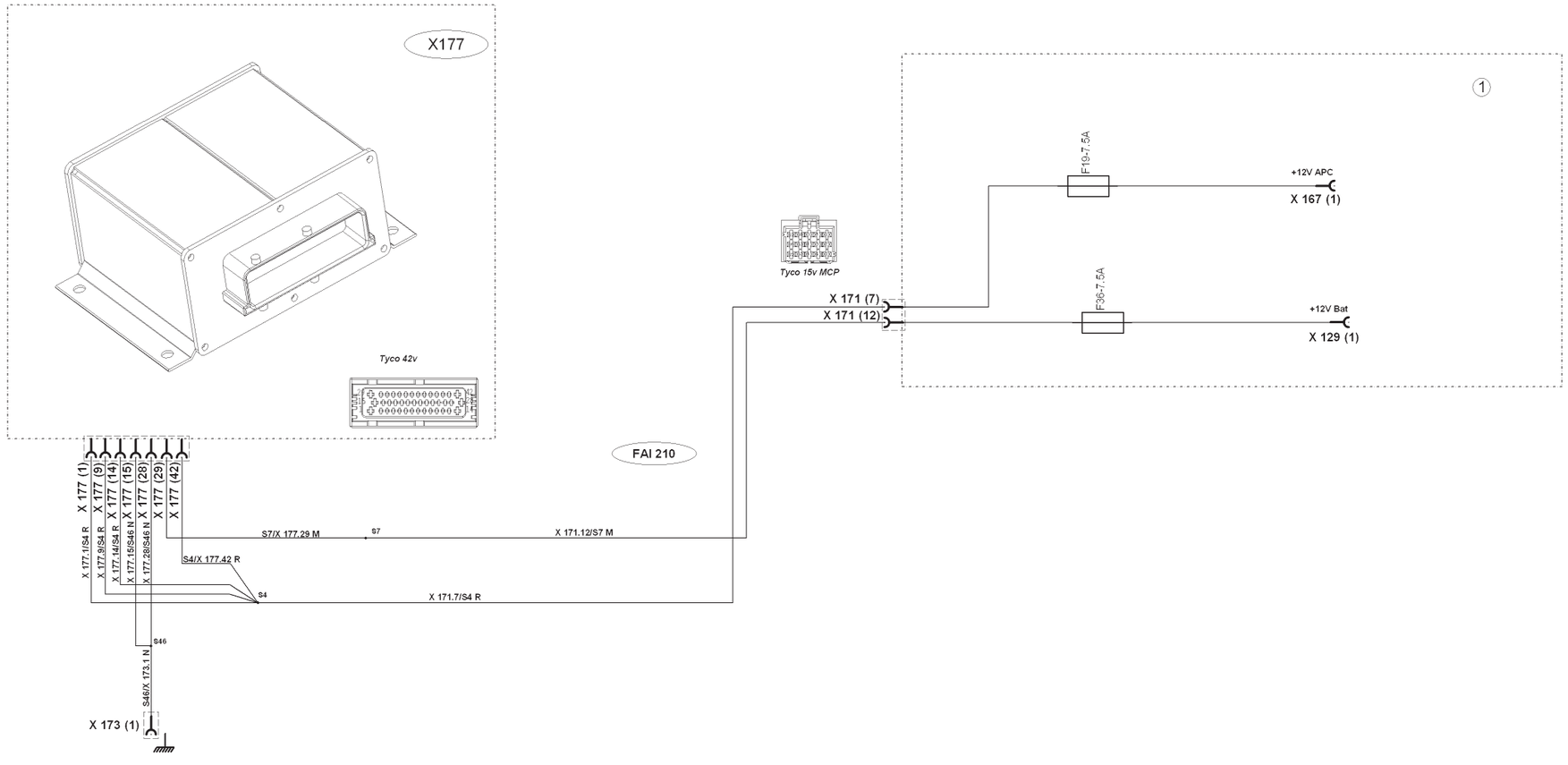

Fig. 10

C.5 Autotronic 5 ParkLock/suspended front axle electrical power supply

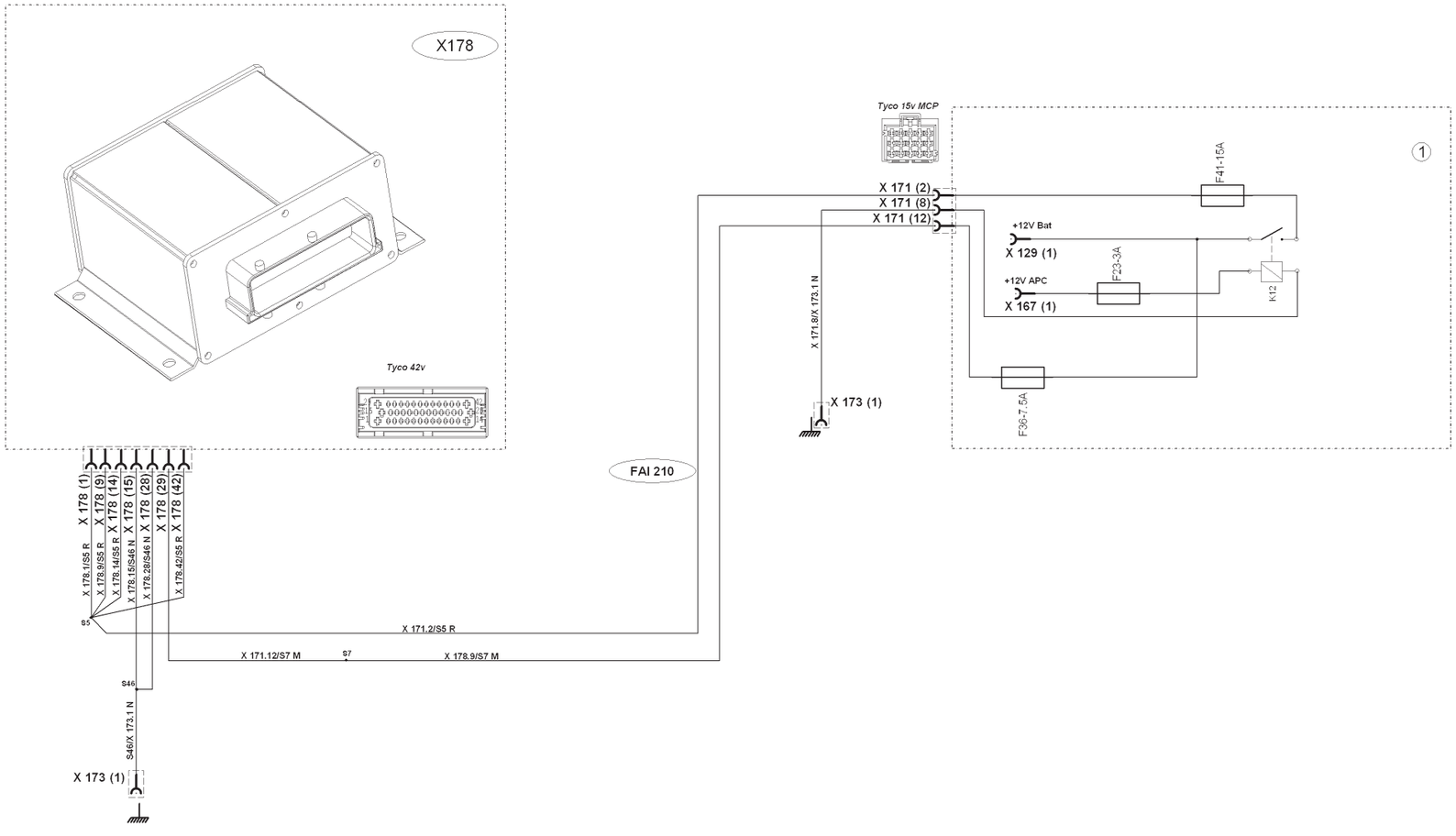

Fig. 11

C.6 DCC3 instrument panel electrical power supply

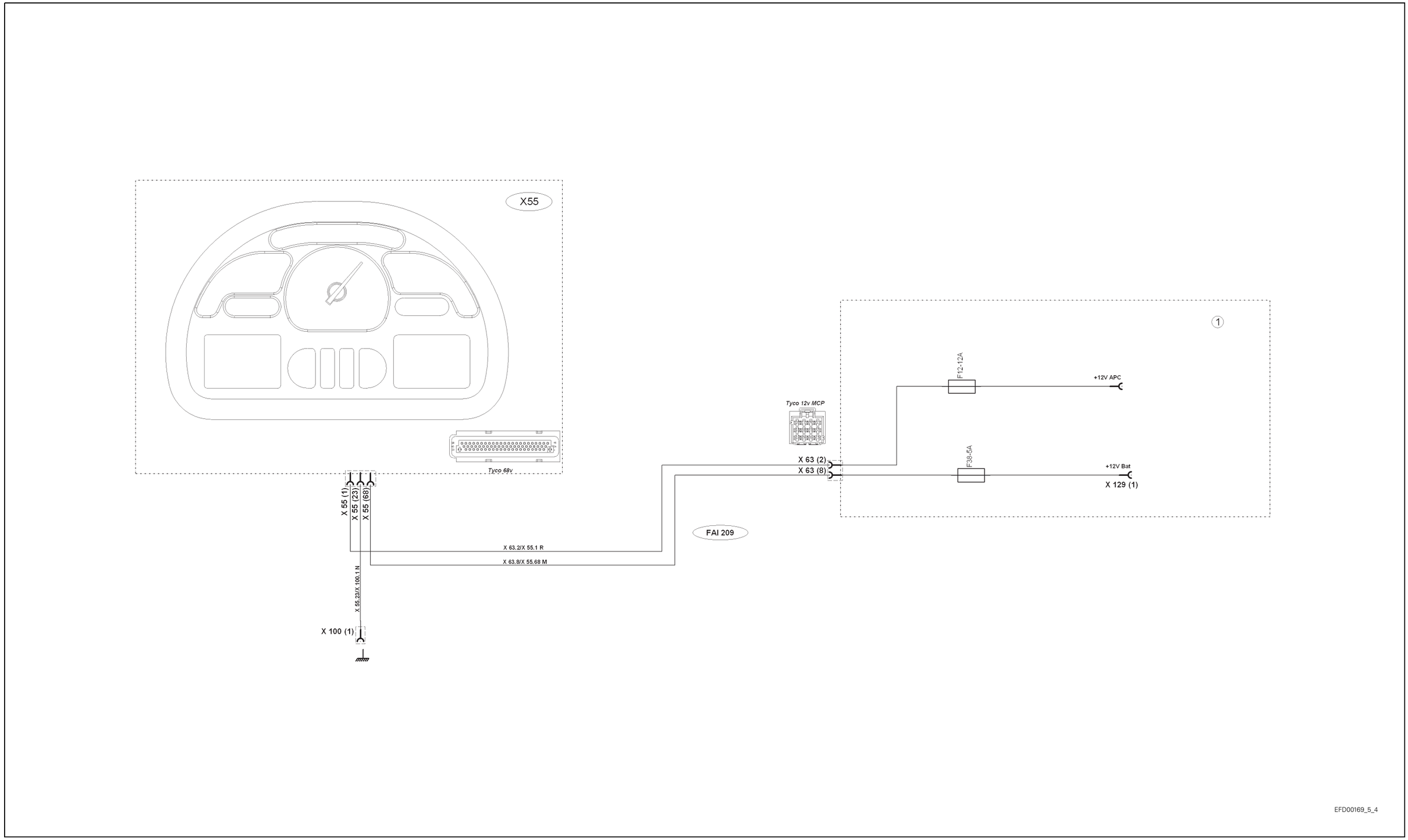

Fig. 12

C.7 Autotronic 5 armrest electrical power supply

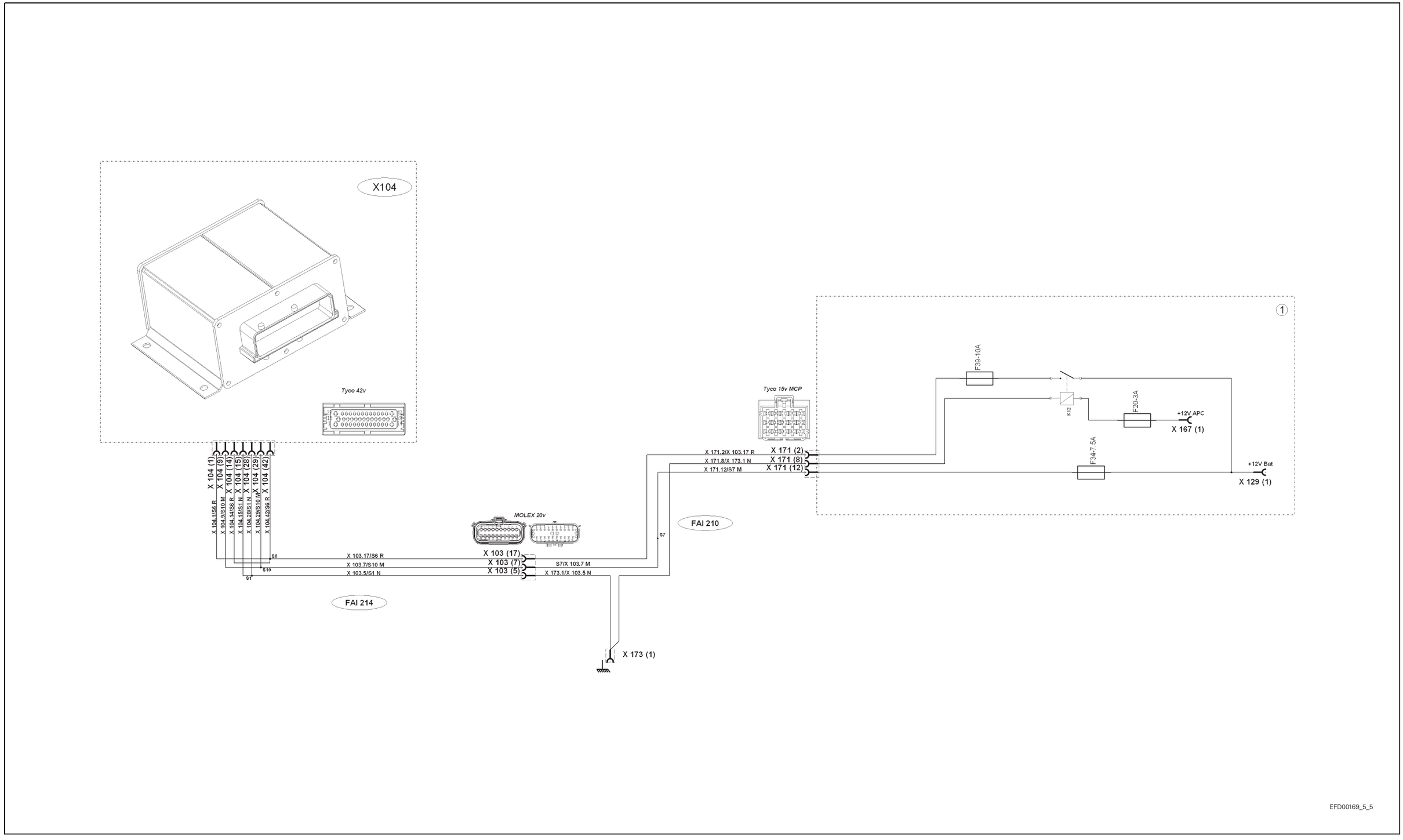

Fig. 13

C.8 Autotronic 5 active suspended cab electrical power supply

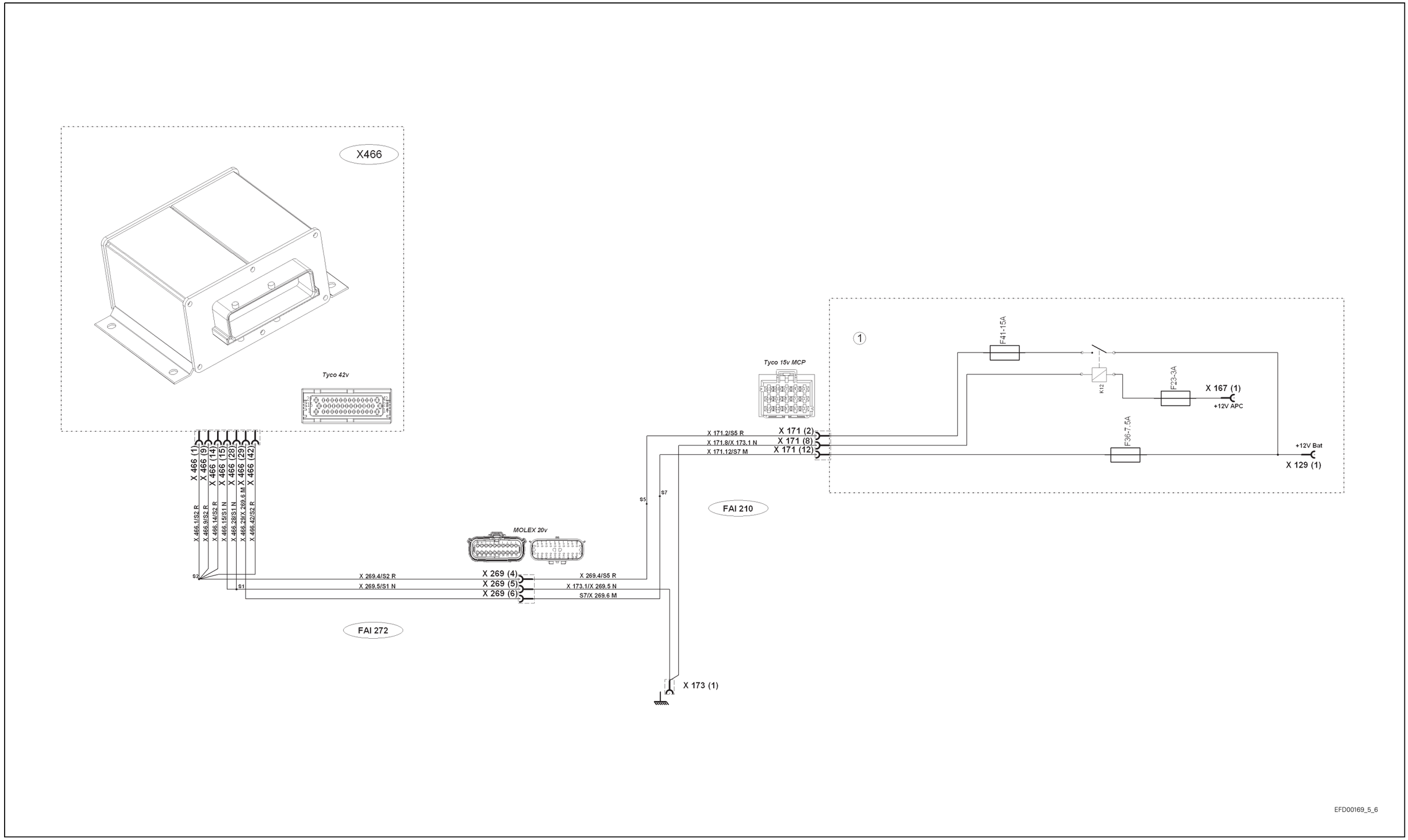

Fig. 14

C.9 Sisu EEM electronic unit electrical power supply

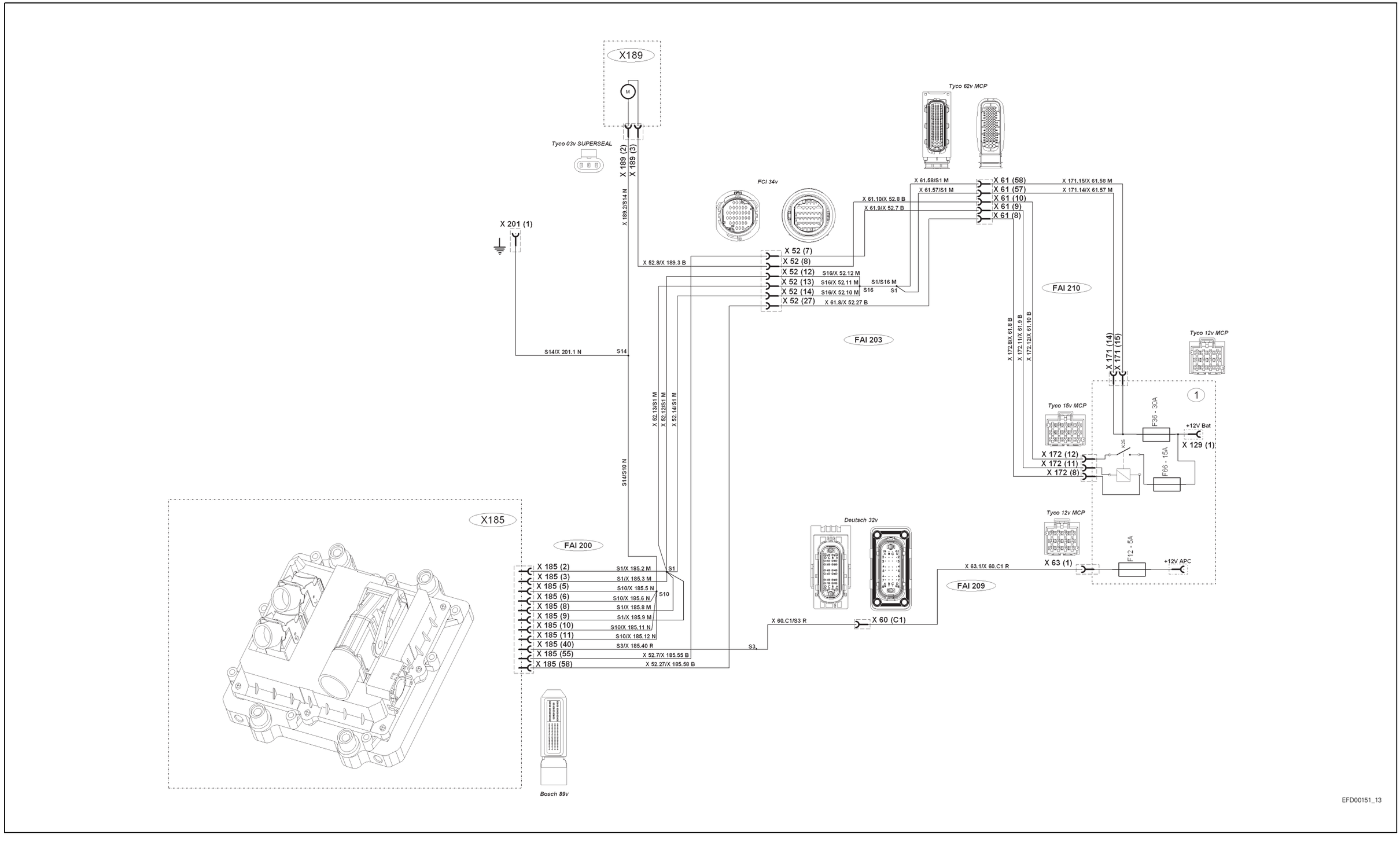

Fig. 15

C.10 Automatic air-conditioning unit electrical power supply

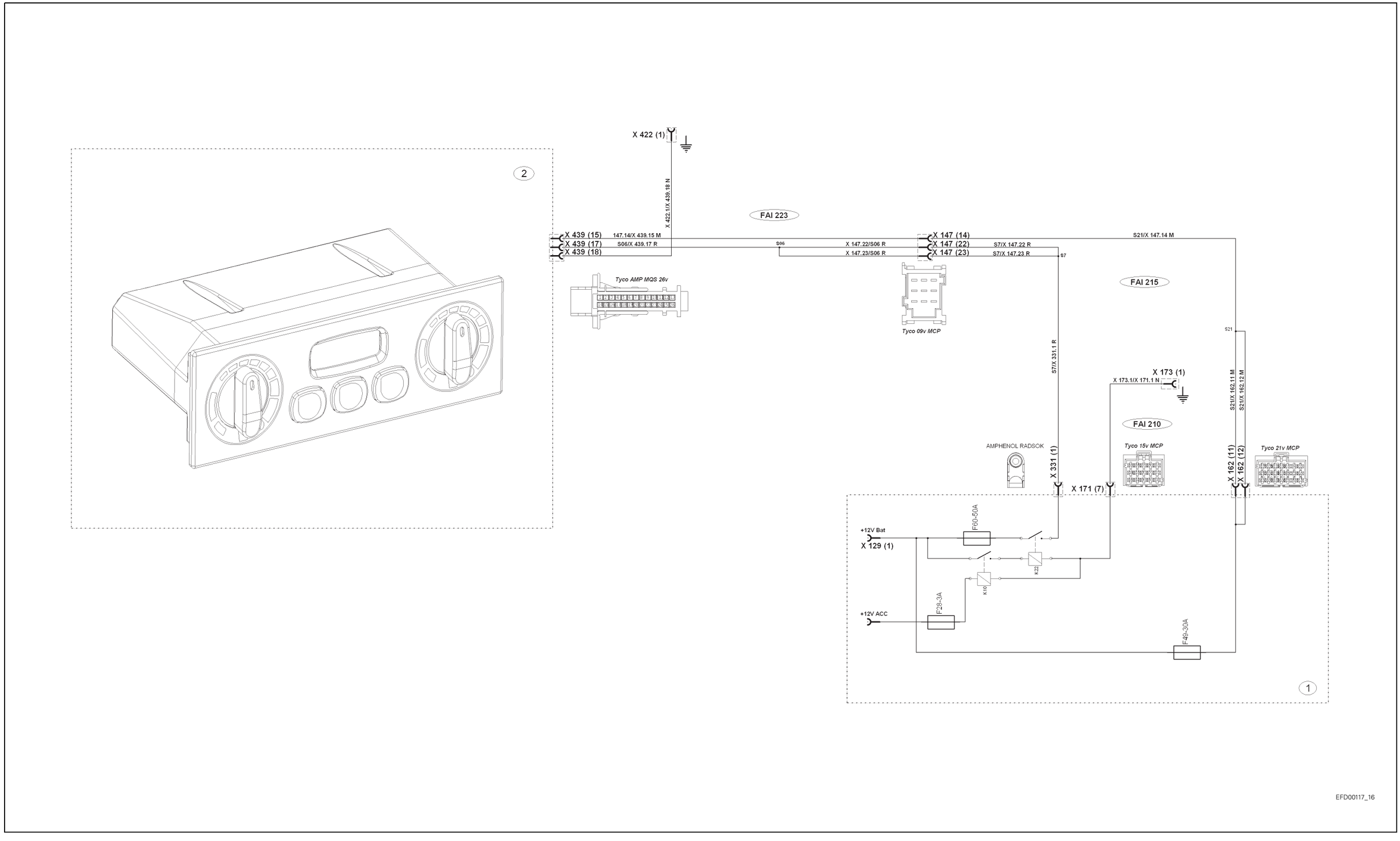

Fig. 16

C.11 Diagnostics connector electrical power supply

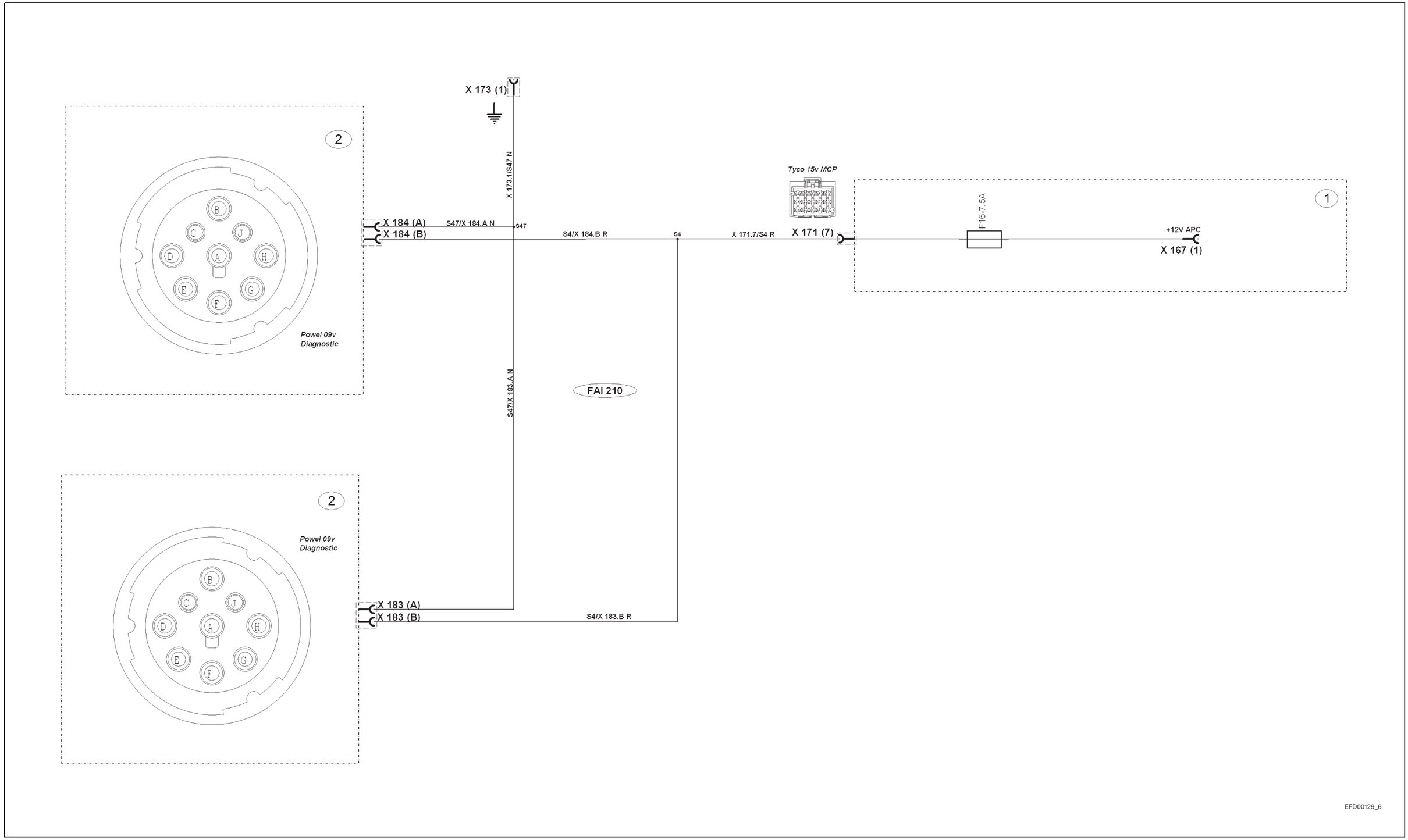

Fig. 17

C.12 Tractor CAN network

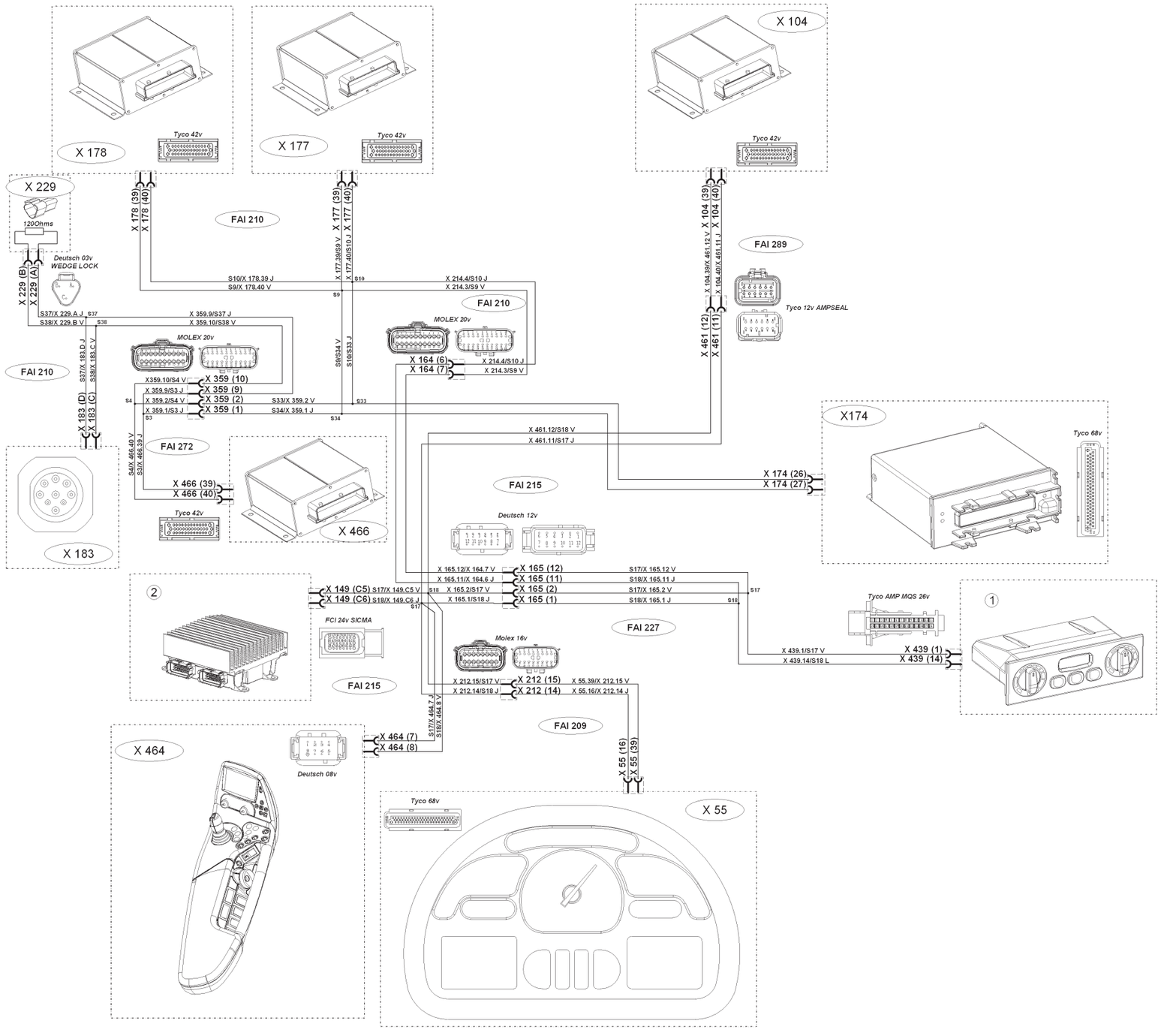

Fig. 18

C.13 Engine CAN network

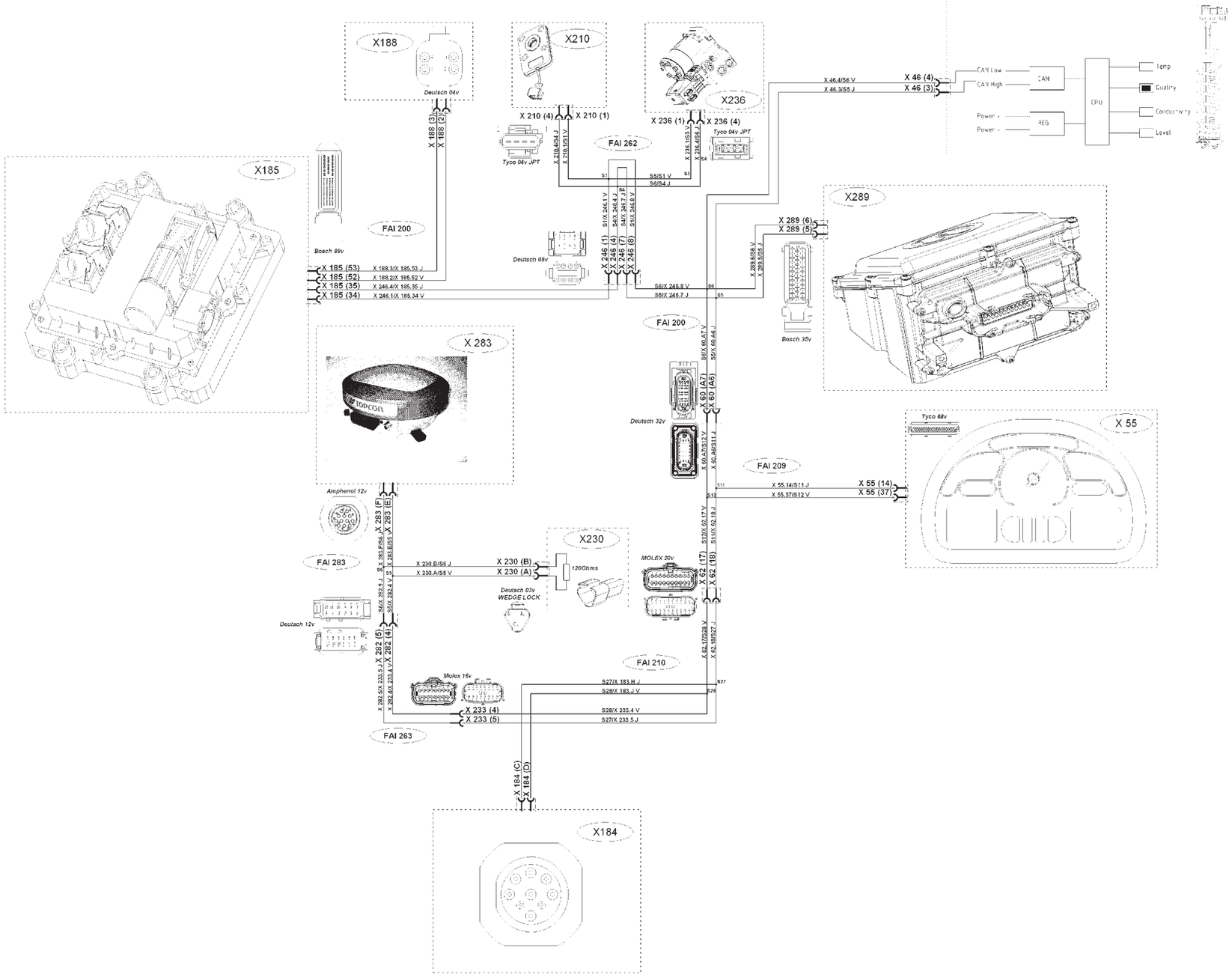

Fig. 19

C.14 Linkage CAN network

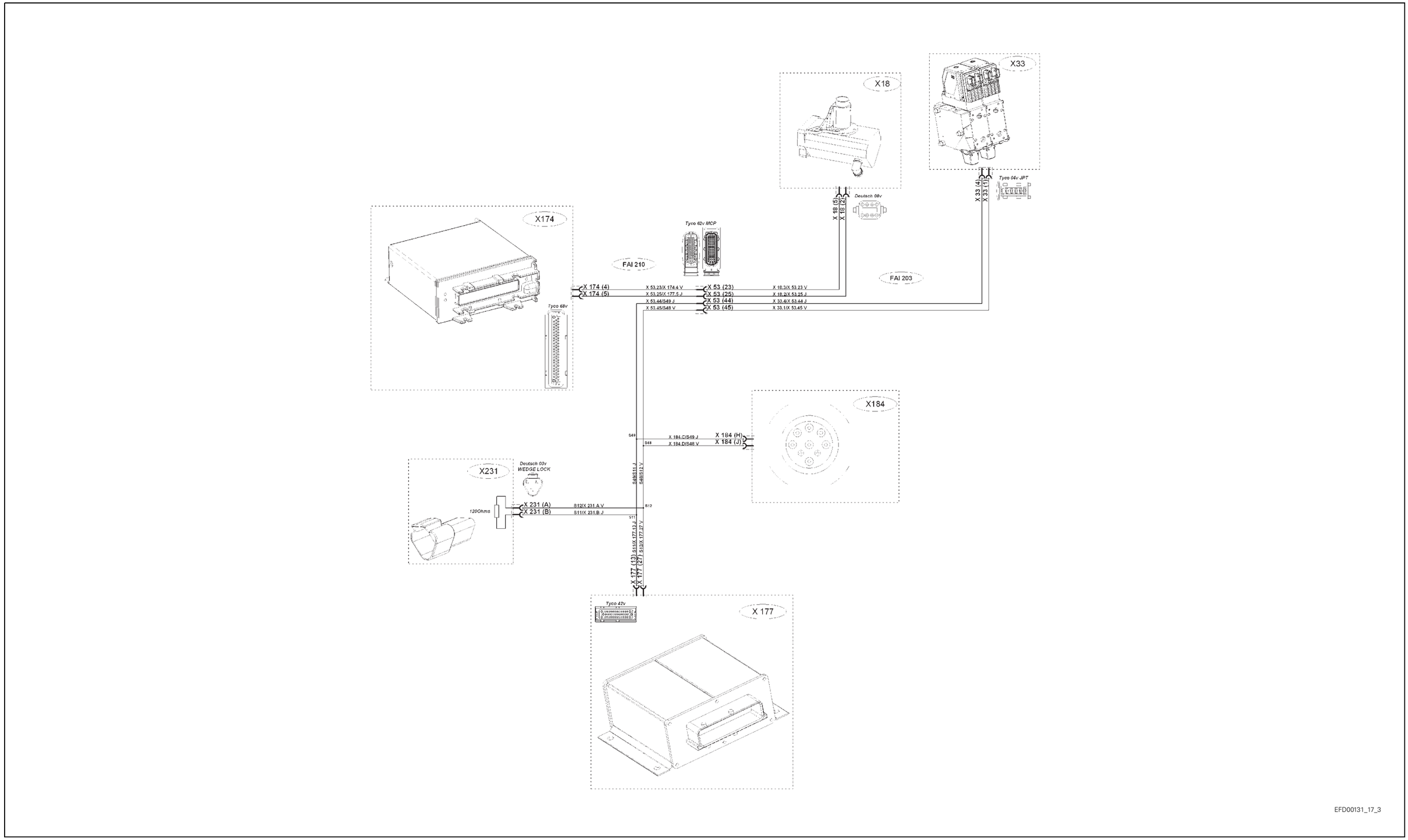

Fig. 20

C.15 Isobus CAN network

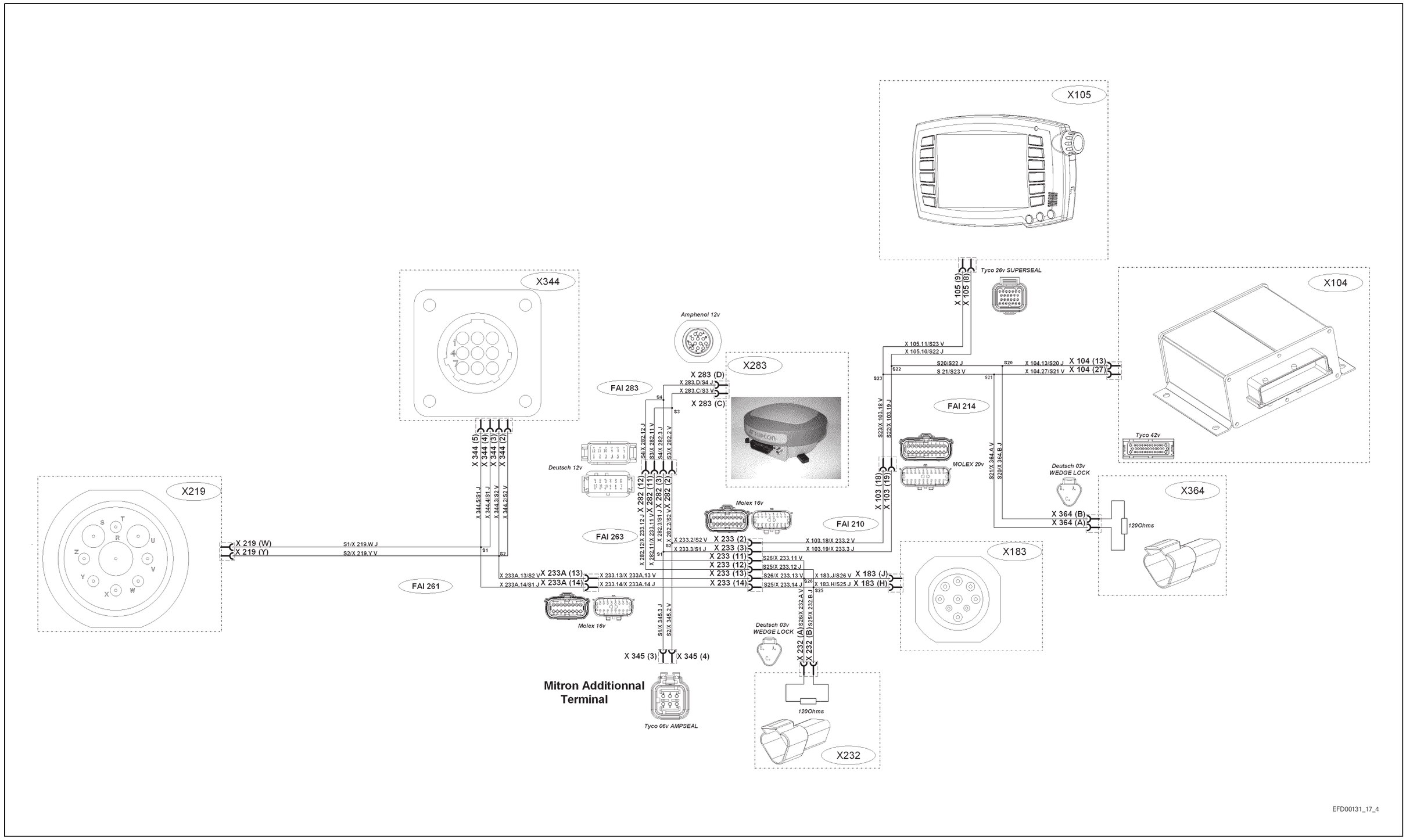

Fig. 21

C.16 DANA suspended front axle

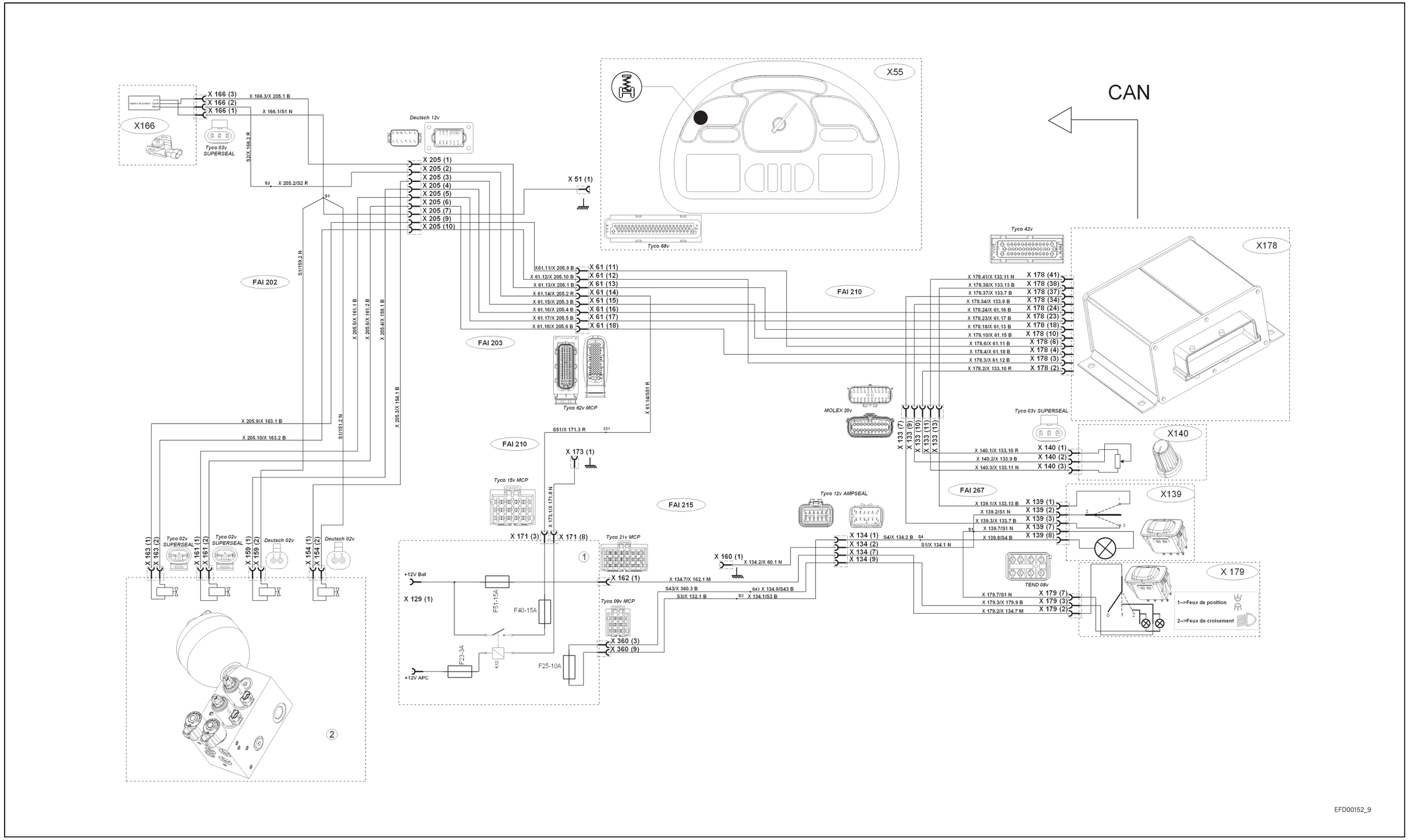

Fig. 22

8A13

DANA770 - Location of components - Front axle

TABLE OF CONTENTS

A. Front axle main components

Ref.	Component description	Location
(1)	Suspension sensor	On the axle on the left-hand side
(2)	Steering sensor	On the axle on the left-hand side
(3)	Upper suspension arm	In front of the front axle
(4)	Left-hand accumulator	To the left of the suspension unit
(5)	Lower suspension arm	In front of the front axle
(6)	Hydraulic suspension unit	To the left of the differential housing
(7)	Differential housing	Behind the front axle
(8)	Right-hand accumulator	To the right of the suspension unit
(9)	Suspension support	In front of the front axle
(10)	Beam	Front axle
(11)	Hub	At each end of the beam
(12)	Rim attachment studs	On the final drives
(13)	Final drives	At each end of the front axle
(14)	Steering rod	At each end of the steering ram
(15)	Lock solenoid valve	On the suspension unit
(16)	Lock solenoid valve	On the suspension unit
(17)	Lifting solenoid valve	On the suspension unit
(18)	Lowering solenoid valve	On the suspension unit
(19)	Suspension bleed screw	On the left of the suspension unit
(20)	Pin	On top of the front axle
(21)	Steering ram	Behind the front axle
(22)	Suspension ram	In front of the front axle

A.1 Front axle main components - suspended front axle diagram

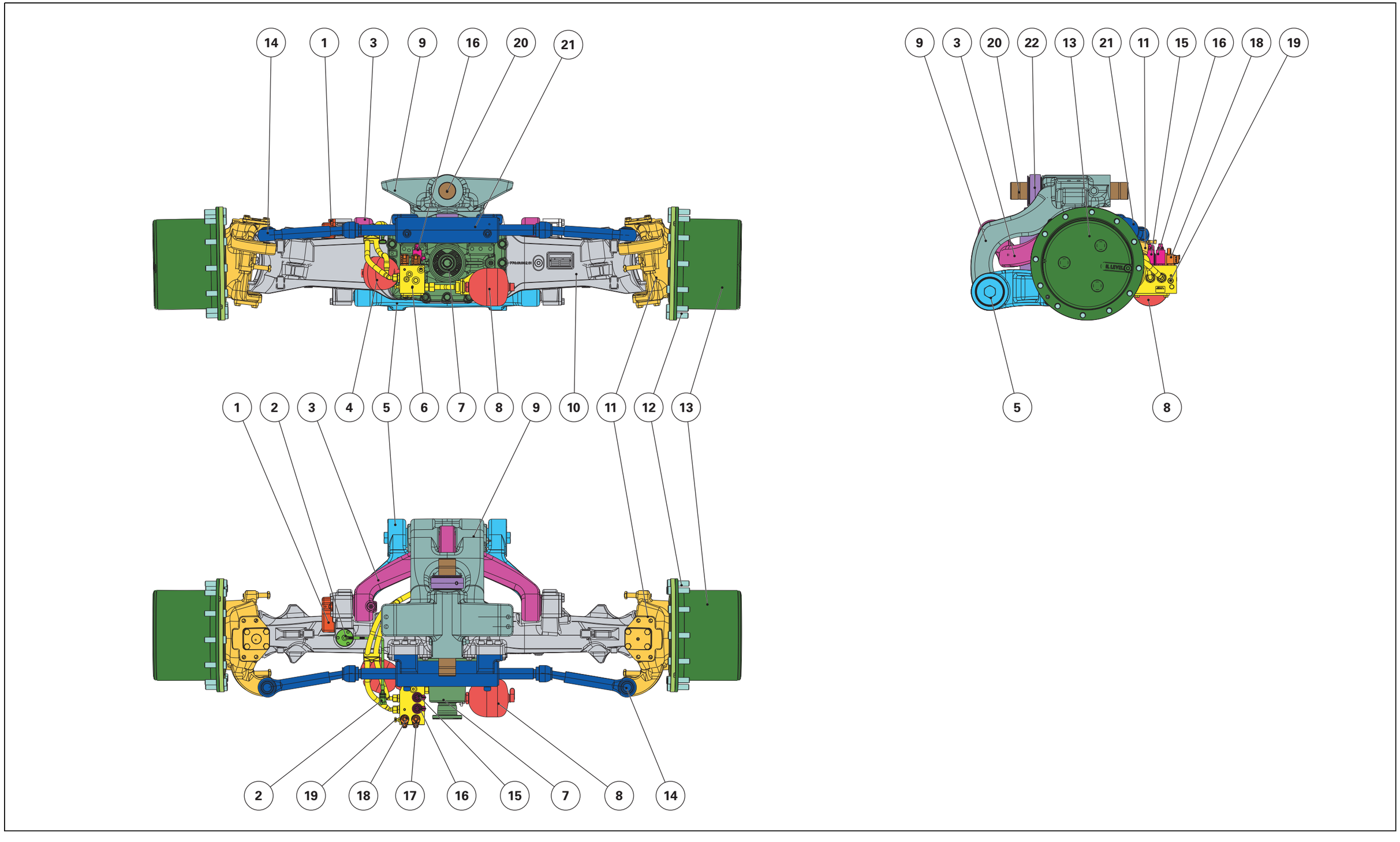

Fig. 1

A.2 Front axle main components - fixed front axle diagram

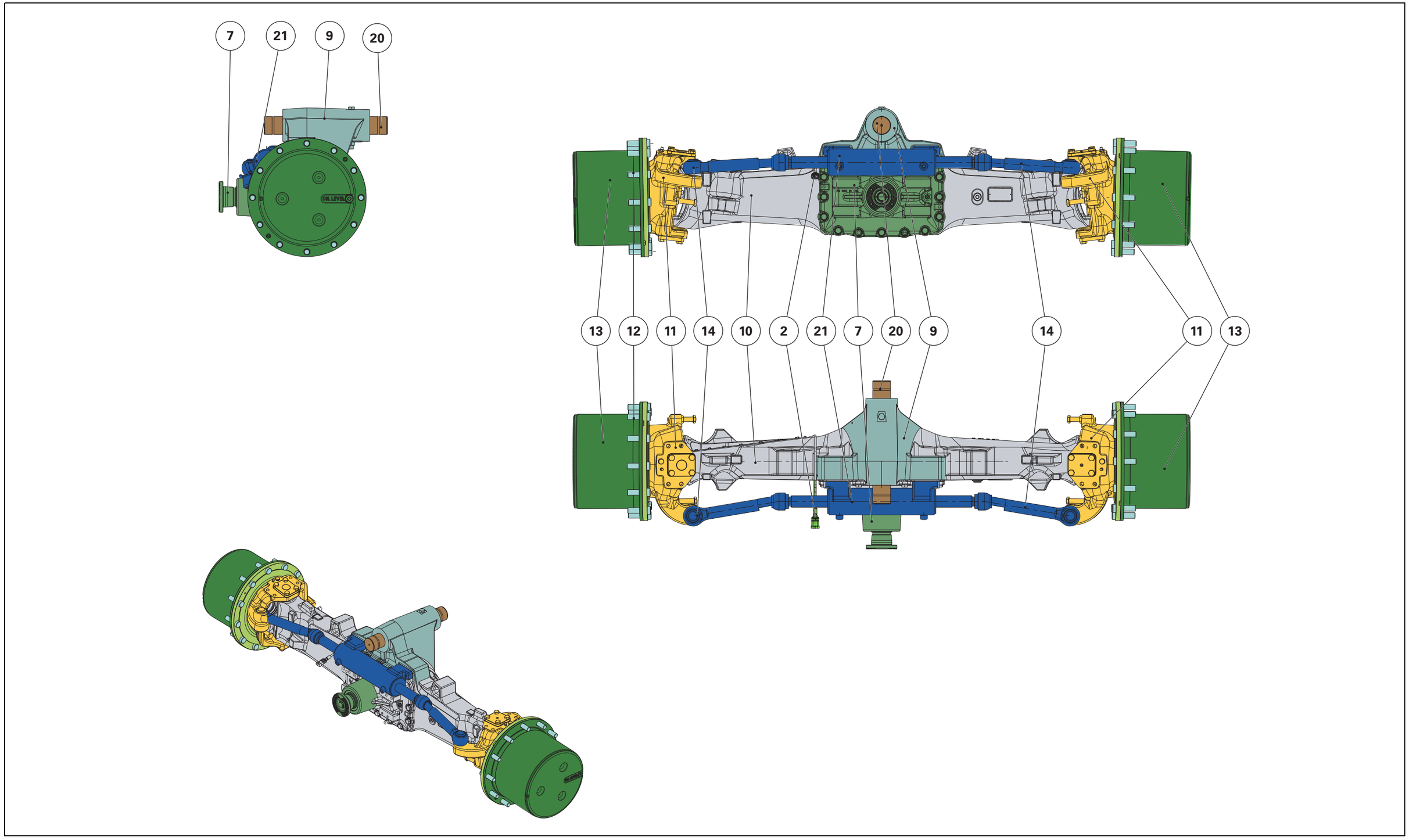

Fig. 2

8A14

DANA770 - Tests and diagnostics

TABLE OF CONTENTS

A. Accumulator pressure and volume

Type	Volume	Pressure
Front axle left accumulator	1 l (of which 200 ml is oil)	10 bar
Front axle right accumulator	1,4 l	50 bar
ParkLock accumulator	0,75 l	108 bar
Main braking accumulator	0,75 l	44 bar
Passive suspended cab accumulator (the pressure cannot be modified)	0,075 l (of which 0,025 l is oil)	30 bar
Semi-active suspended cab accumulator (the pressure cannot be modified)	0,075 l	38 bar
Transmission accumulator (the pressure cannot be modified)	0,3 l	10 bar

B. Preliminary steps

The first points to check before carrying out the test are:

- check that the hydraulic oil level (A) (Fig. 1) is correct
- check that the last service inspections have been complied with

Before starting the tests, run the engine and operate a hydraulic function to reach a hydraulic operating temperature of 60°C. To assist the rise in temperature, connect a flowmeter to an auxiliary spool valve and limit the flowmeter flow rate.

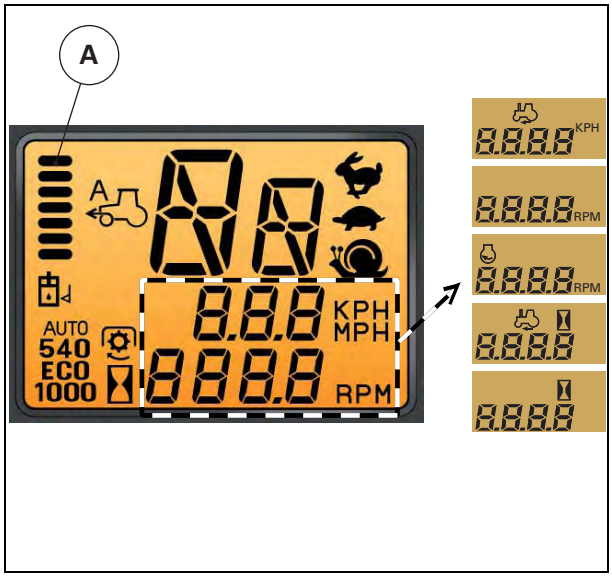

I009075

Fig. 1

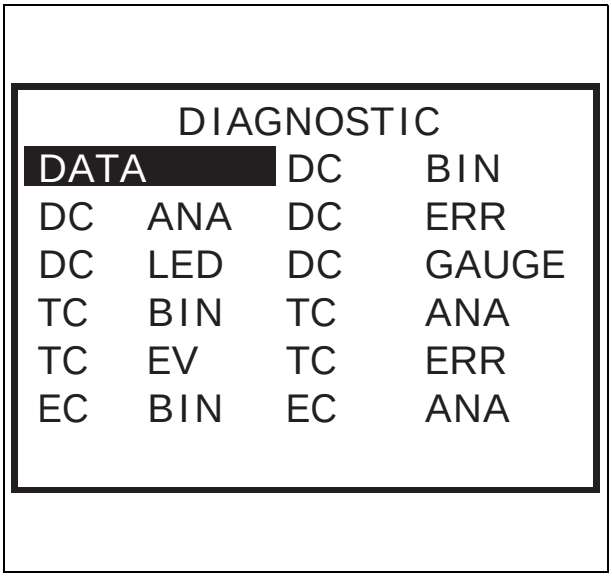

I009073 Fig. 2

NOTE: *To quickly read off the hydraulic oil temperature, it is necessary to return to diagnostic mode on the instrument panel by pressing the top arrow located on the steering column for 7 seconds. The screen (Fig. 2) is displayed. Using the navigation control on the steering wheel, enter DATA mode and then scroll through until "Hyd-Temp" appears (Fig. 3).*

Reminder:

During the tests, select pressure gauges, hoses and unions of sufficient capacity and strength for the checks to be carried out.

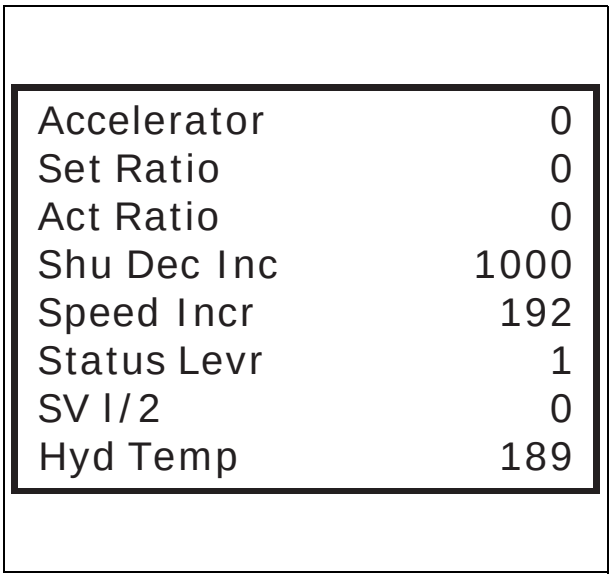

I009074 Fig. 3

C. Checks and tests

Checking the ram pressure

Parameters required:

- hydraulic oil temperature at 60 °C
- engine idle speed at 800 rpm

Tools used:

- pressure gauge, minimum value of 250 bar
- hydraulic T connector

Method

1. Decompress the system via the screw (Z).

2. Fit a T connector to the piston line of the ram (A) in order to read off the maximum pressure.

3. Connect the pressure gauge.

4. Start the suspended front axle calibration procedure in order to reach the upper stop, so that the pressure is at maximum.

5. When the ram is in the maximum position, the pressure reading on the pressure gauge is normally:
P = 200 bar +/- 10 bar

A check of the LS line can be carried out as follows:

6. Start a calibration. Try to reach the upper stop.

7. If this is not possible, try to reach the top position by operating a hydraulic spool valve.

8. If the front axle reaches the upper stop, a nozzle may be blocked. To locate the nozzles on the hydraulic unit, see (see §)

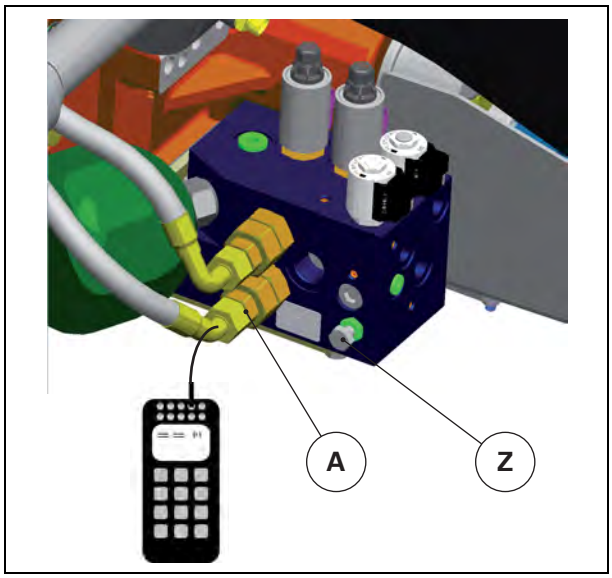

I009317 Fig. 4

Accumulator test

The suspension is equipped with two accumulators:

- for low loads, there is an accumulator of 10 bar
- for higher loads, there is an accumulator of 50 bar

Tool used:

- accumulator test kit, ref. 3378059M1

Accumulator specifications

Left-hand accumulator:

- nitrogen charge pressure: 10 bar,
- accumulator volume: 1 l of which 200 ml is oil

Right-hand accumulator:

- nitrogen charge pressure: 50 bar,
- accumulator volume:. 1,4 l

Method

1. Decompress the system by loosening the screw (Z) (to remove an accumulator).

   NOTE: *A muffled noise can be heard from the system during the discharge.*

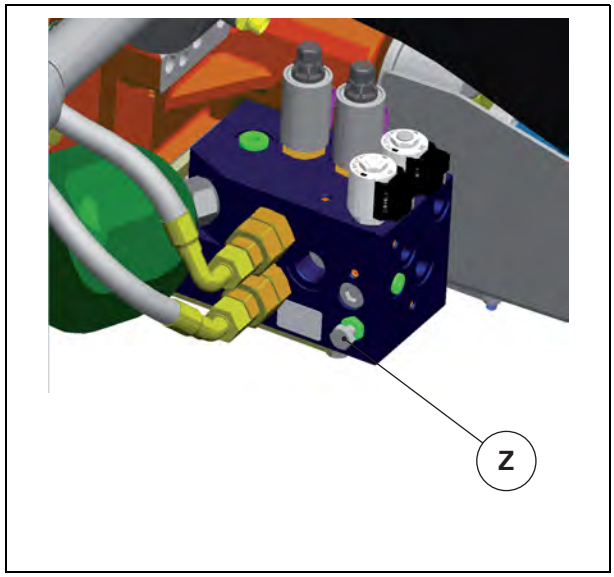

I009319 Fig. 5

2. Check the accumulator (B) or (C).
3. Using the equipment from the test kit 3378059M1, check the nitrogen pressure displayed for each of the above accumulators.
4. If the pressure is zero, it is recommended that the accumulator be changed or recharged.

NOTE: *An instruction sheet is provided in the accumulator test kit.*

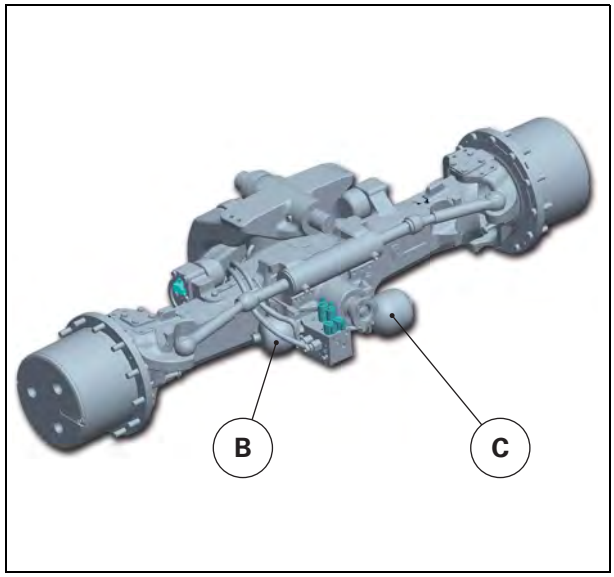

I009320 Fig. 6

Checking the pressure of the pressure relief valve

Parameters required:

- tractor stationary

Tools used:

- hand calibrating pump
- pressure gauge, minimum value of 250 bar

Method

1. Connect a hand calibrating pump and a pressure gauge to the union on the ram rod side (A).
2. Check the relief valve opening pressure:
   P = 215 bar +/- 15 bar

8A15

Section intentionally left blank

TABLE OF CONTENTS

8A16

DANA770 - Adjustments, bleeding and calibrations

TABLE OF CONTENTS

A. Suspended front axle

Settings

1. Correctly insert rubber guide (A) into the body of front axle (B), fitting the guide into the slot (Fig. 15).
2. Fit the sensor rod into rubber guide (A) (Fig. 15).

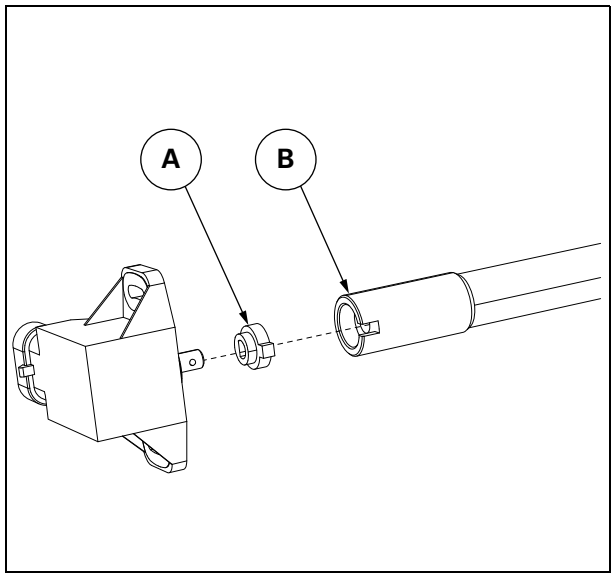

I008023 Fig. 1

3. Tighten the sensor approximately in the centre of the ports (Fig. 16) so the voltage is between 0.5 V and 1.6 V in low position.

NOTE: *After adjusting the sensor, it is recommended to carry out calibration.*

Calibration

Calibration must be carried out on the suspended front axle when:

- the position sensor is adjusted or replaced
- the Autotronic 5 is replaced

Calibration consists of determining the values of the upper and lower suspension stops.
If no calibration value has been stored, Autotronic 5 displays error 11.

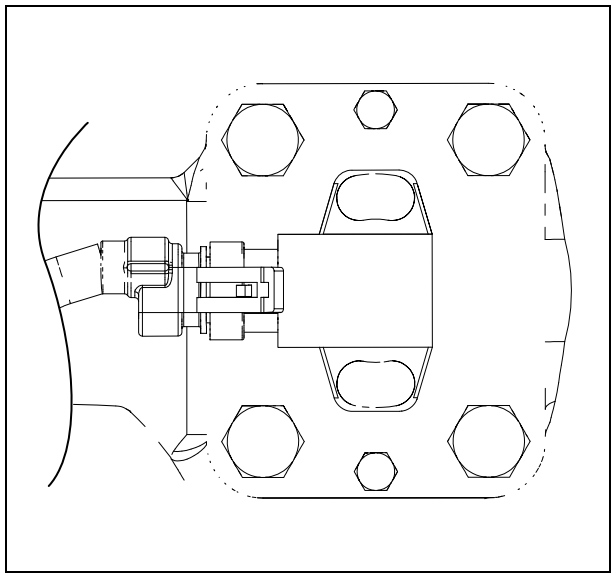

I008024 Fig. 2

To enter calibration mode:

4. Press the suspension activation switch for 10 seconds.

5. The suspended front axle indicator light on the instrument panel (2) flashes (Fig. 17).

6. Press and hold down the suspension activation switch until the axle reaches its upper stop.

7. Once the maximum upper position is reached, release the switch.

8. Press and hold down the suspension deactivation switch until the axle reaches its lower stop.

9. Once the maximum lower position is reached, release the switch.

10. When the switch is released, the suspension activates automatically (intermediate position).

NOTE: *If the stop values are outside the allowed tolerances or if suspension travel is lower than the minimum fixed value, the Autotronic 5 remains in Calibration mode. In this case, adjust the position sensor more accurately.*

Reminder of the signal values:

- *low position from 1.2 V to 1.6 V*
- *high position from 3.3 V to 4.5 V*

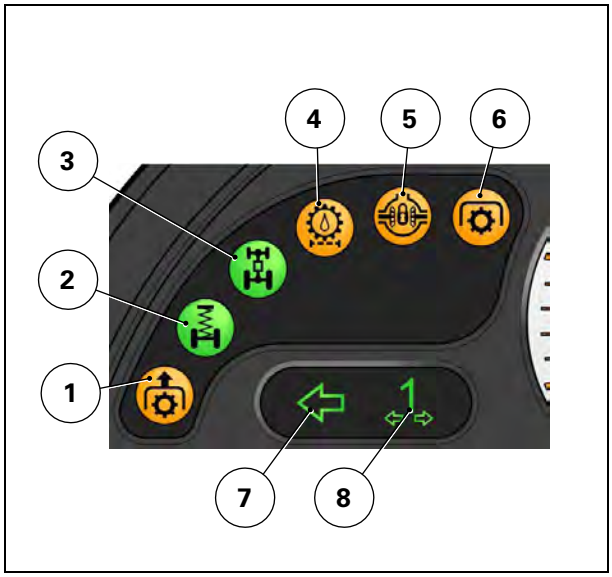

I004255

Fig. 3

8A17

DANA770 - Disassembly and reassembly

TABLE OF CONTENTS

LEGEND SYMBOLS - LEGENDA DEI SIMBOLI - ZEICHENERKLÄRUNG - SÍMBOLOS DE LA LEYENDA - LÉGENDE DES SYMBOLES

	Disassembly of assembly groups Smontaggio di sottogruppi Zerlegen von Baugruppen Desmontaje de subgrupos Demontage des sous-groupes
	Reassemble to from assembly groups Montaggio di sottogruppi Zusasmmenbauen von Baugruppen Ensamblaje de subgrupos Montage des sous-groupes
	Remove obstruction parts Smontaggio di particolari ingombri Abbauen-Ausbauen Desmontaje de componentes abultados Demontage des pieces encombrante
	Reinstall-remount parts which had obstructed disassembly Montaggio di particolari ingombri Einbauen-Ausbauen Montaje de componentes abultados Montage des pieces encombrante
	Attention! Important notice Attenzione, indicazione importante Achtung, wichtiger Hinweis ¡Cuidado! Indicación importante Attention, indication importante
	Check - adjust e.g. torque, dimensions, pressures, etc. Controllare - regolare p.e. coppie, misure, pressioni ecc. Prüfen - Einstellen z.B. Momente, Maße, Drucke u.s.cs. Controlar y ajustar, por ej. pares, medidas, presiones, etc. Controler, regler p.e. couples, mesures, pressions ecc.
	T = Special tool P = page T = Attrezzature speciali P = Pagina T = Spezialwerkzeug P = Seite T = Herramientas especiales P = Pa´gina T = Outils P = Page
	Note direction of installation Rispettare direzione di montaggio Einbaurichtung beachten Respetar la dirección de ensamblaje Respecter direction de montage
	Visual inspection Esaminare con controllo visuale Kontrollieren -Prüfen Examinar mediante inspección visual Controler, examiner, controle visuel
	Possibly still serviceable, renew if necessary Eventualmente riutilizzare (sostituire se necessario) Bedingt weiderverwendbar Puede volver a utilizarse (reemplazar, si es preciso) Eventuellement a utiliser a noveau (remplacer si ne´cessaire)
	Renew at each reassembly Sostituire ad ogni montaggio Beim Zusammenbau immer erneuern Puede reemplazarse a cada ensamblaje Remplacer avec chaque montage
	Unlock - lock e.g. split pin, locking plate, etc. Togliere-mettere la sicura Entsichern-Sichern Quitar-colocar el seguro Enlever-mettre la securite
	Lock-adhere (liquid sealant) Mettere la sicura, incollare (mastice liquido) Sichern-Kleben (flüssige Dichtung) Colocar el seguro, pegar (mastique li´quido) Mettre la securite, coller (mastic liquide)
	Guard against material damage, damage to parts Evitare danni materiali, danni a pezzi Materialschaden verhüten Evitar dañar los materials o las piezas Eviter dommages au materiaux, dommages au pieces
	Mark before disassembly, observe marks when reassembly Marchiare prima dello smontaggio (per il montaggio) Vor dem Ausbau markieren (fü´r den Zusammenbau) Marcar antes de desmontar (para facilitar el ensamblaje) Marquer avant le demontage (pour le montage)
	Filling - topping up - refilling e.g. oil, cooling water, etc. Caricare - riempire (olio - lubrificante) Einfüllen - Auffüllen - Nachfüllen (Öl-Schmiermittel) Cargar - llenar (aceite lubricante) Charger - remplir (huile - lubrifiant)
	Drain off oil, lubricant Scaricare olio, lubrificante Öl, bzw. Schmiermittel Ablassen Descargar aceite lubricante Vidanger, lubrifiant
	Tighten Tendere Spannen Tensar Tendre
bar	Apply pressure into hydraulic circuit Inserire pressione nel circuito idraulico Leitung unter Druck setzen Introducir presión en el circuito hidra´ulico Inserer pression dans le circuit hydraulique
	To clean Pulire Reinigen Limpiar Nettoyer
	Lubricate - grease Lubrificare - ingrassare Schmieren - einfetten Lubrificar - Engrasar Lubrifier - Graisser

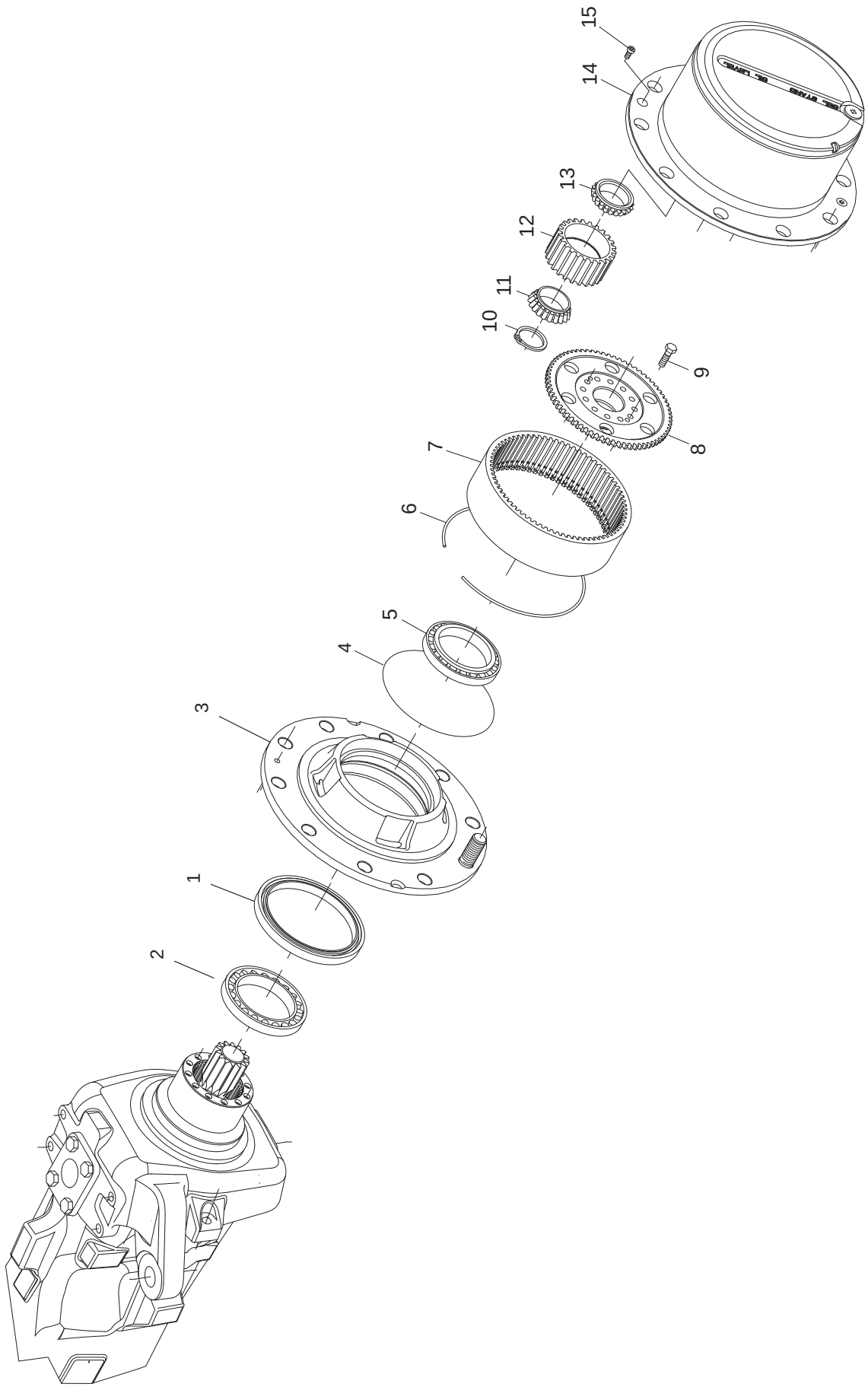
1
2
3
4
5
6
7
8
9
10
11
12
13
14
15

DISASSEMBLY - DISASSEMBLAGGIO - DEMONTIEREN - DESENSAMBLAR - DÉSASSEMBLER

GB a

CAUTION!
Perform all operations on both arms.
Remove the oil-level plug.
Drain off oil.

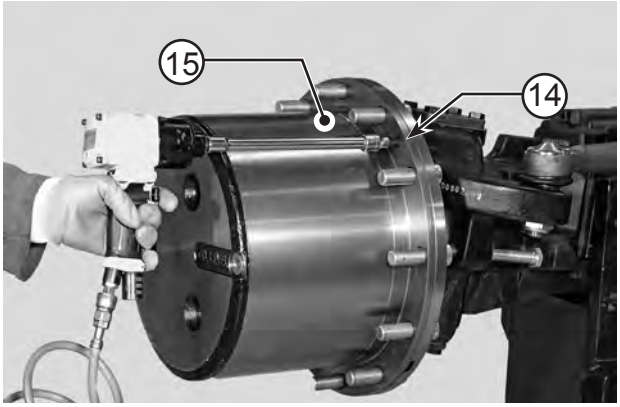

GB b

Remove the locking screws (15) of planetary cover (14).

GB c

Disjoin the spider cover (15) from the hub by alternatively forcing a screwdriver into the appropriate slots.

GB d

Harness the planetary gear carrier cover (15).
Remove the complete planetary carrier cover (15), place a safety anti-tilting stand **"B"** under the arm that remains connected and block wheels, if any.

GB e

Remove snap ring (10).

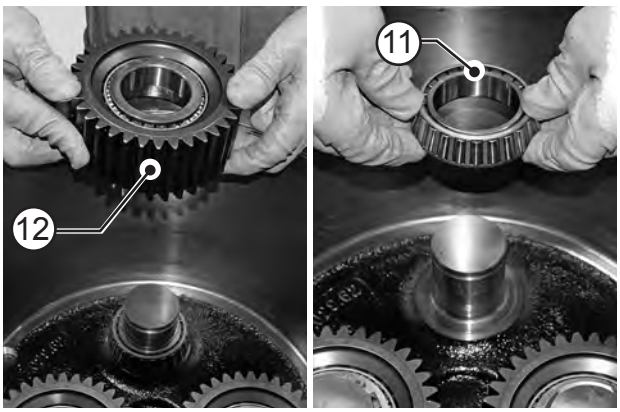

GB f

Remove the planet wheel gears (12) and the external bearing (11).

a

I **ATTENZIONE!**
Eseguire tutte le operazioni per i due bracci.
Asportare il tappo di livello olio.
Scaricare olio.

D **ACHTUNG!**
Alle Vorgänge für beide Arme durchführen.
Ölpegelstopfen abnehmen.
Schmiermittel ablassen.

E **CUIDADO!**
Ejecutar todas las operaciones para los dos brazos.
Sacar el tapón de carga de nivel aceite.
Descarcagar aceite.

F **ATTENTION!**
Effectuer toutes les opérations sur les 2 bras.
Enlever le bouchon de la jauge d'huile.

b

I Rimuovere le viti (15) di fissaggio del coperchio portasatelliti (14).

D Schrauben (15) abschrauben, die den Deckel des Planetenradhalters (14) befestigen.

E Remover los tornillos (15) de fisaje de la tapa porta satelites (14).

F Enlever les vis (15) de fixation du couvercle porte satellites (14).

c

I Utilizzando un cacciavite inserito alternativamente nelle cave predisposte, staccare il coperchio portasatelliti (15).

D Mit einem Schraubenzieher den Planetenradhalterdeckel (15) vom Gelenkgehäuse trennen. Dazu den Schraubenzieher abwechselnd in die vorgesehenen Nuten stecken und anheben.

E Utilizando un destornillador introducido alternativamente en las ranuras predispuestas, desprender la tapa portasatélites (15).

F A l'aide d'un tournevis introduit au fur et à mesure dans les creux prédisposés, décrocher le couvercle porte-satellites (15).

d

I Imbragare il coperchio portasatelliti (15).
Asportare il coperchio portasatelliti (15) completo, posizionare sotto al braccio che rimane collegato, un cavalletto di sicurezza antiribaltamento **"B"** e bloccare le eventuali ruote.

D Die Planetenträgerabdeckung (15) einschlingen.
Kompletten Planetenradhalterdeckel (15) abnehmen, inen Bock **"B"** zur Sicherheit unter den Arm legen, der angeschlossen bleibt, um ein Umkippen zu vermeiden und die Räder ggf. blockieren.

E Embragar la cubierta portasatélites (15).
Sacar la tapa portasatélites (15) completa, colocar bajo el brazo que queda conectado, un cavallete de seguridad antivuelco **"B"** y bloquear las eventuales ruedas.

F Élinguer le couvercle porte-satéllites (15).
Enlever le couvercle porte-satellites (15) complet, mettre en place sous le bras qui reste relié une béquille de sécurité antibasculement **"B"** et immobiliser les roues éventuelles.

e

I Rimuovere l'anello elastico (10).

D Den Kolbenring entfernen (10).

E Remover el anillo elastico (10).

F Enlever la bague d'étanchéitè (10).

f

I Asportare gli ingranaggi satelliti (12) e cuscinetto esterno (11).

D Die Planetenräder (12) und Lager herausnehmen (11).

E Sacar los engranajes satélites (12) e cojinete (11).

F A l'aide d'un extracteur, extraire les engrenages satellites (12) et le paliers (11).

GB a

Remove the internal bearing (13).

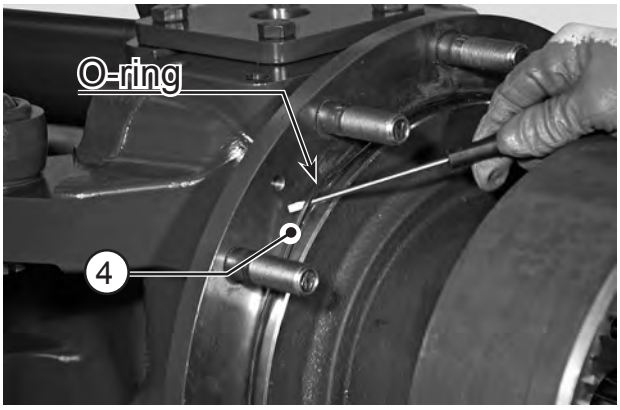

GB b

Remove the O-Ring (4).

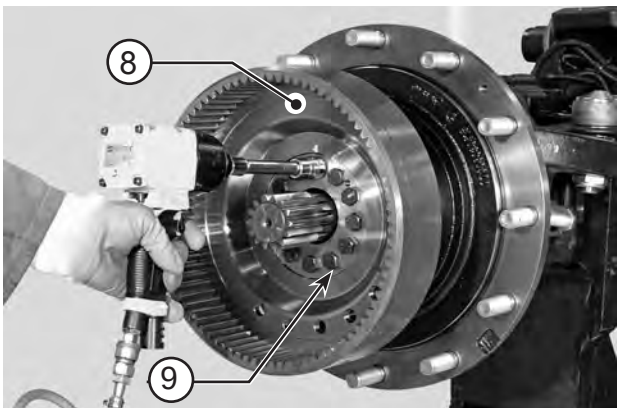

GB c

Unloose and remove the tightening nuts (9) from the crown flange (8).

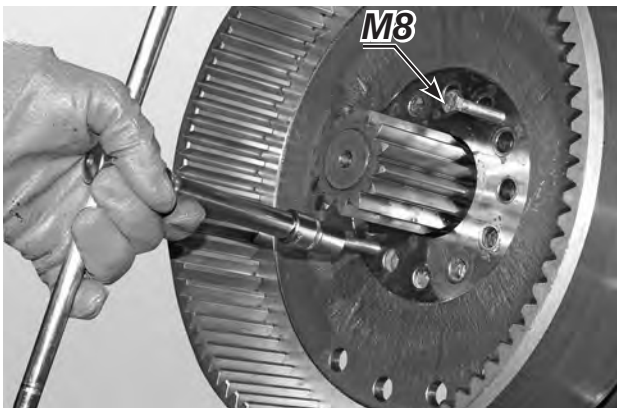

GB d

Use M8 screws of the crown flange (8) to remove it.

GB e

Mark the assembly position of the crown gear carrier flange (8).

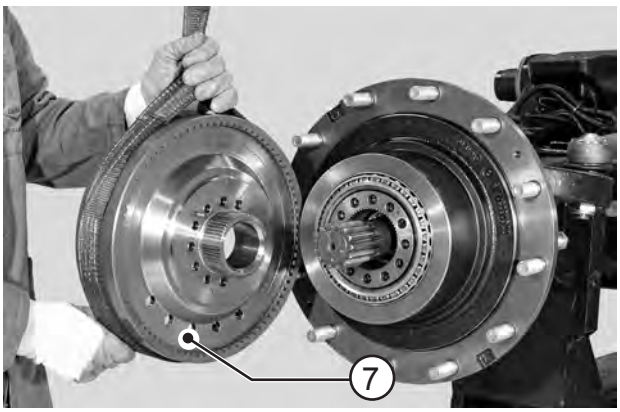

GB f

Remove the crown (7).

a

I Rimuovere il cuscinetto interno (13).

D Inneres Lager (13) abnehmen.

E Remover el cojinete interior (13).

F Enlever le palier interne (13).

b

I Rimuovere l'anello OR (4).

D Den O-Ring (4) abnehmen.

E Remover la junta OR (4).

F Enlever la garniture OR (4).

c

I Allentare ed asportare i dadi (9) che fissano la flangia portacorona (8).

D Befestigungsmuttern (9) des Kranzhalterflansches (8) lockern.

E Aflojar y quitar las tuercas (9) que fijan la brida portacorona (8).

F Desserrer et enlever les ècrous (9) de fixation de la flasque porte-couronne (8).

d

I Rimuovere la flangia della corona (8) utilizzando come estrattore viti M8.

D Schrauben M8 verwenden den Kranz (8) abnehmen.

E Usar tornillos M8 sacar la corona (8).

F Utiliser 2 vis M8 enlever la couronne (8).

e

I Contrassegnare la posizione di montaggio della flangia portacorona (8).

D Die Einbaulage des Kranzhalterflanschs (8) markieren.

E Marcar la posición de montaje de la brida porta corona (8).

F Repérer physiquement la position de montage de la bride porte-couronne (8).

f

I Rimuovere la corona (7).

D Den Kranz abnehmen (7).

E Sacar la corona (7).

F Enlever la couronne (7).

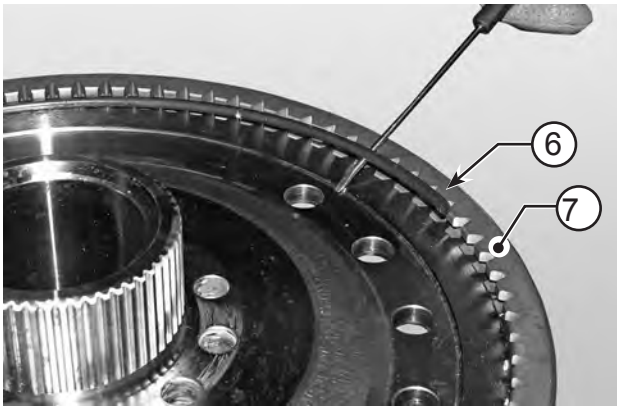

GB a

Remove the snap ring (6) from the crown (7).

GB b

Remove the crown flange (8).

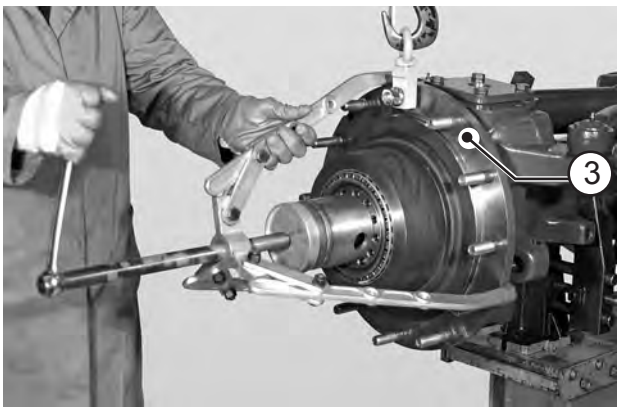

GB c

Harness the wheel hub (3).
Partially extract the hub (3) using an extractor.

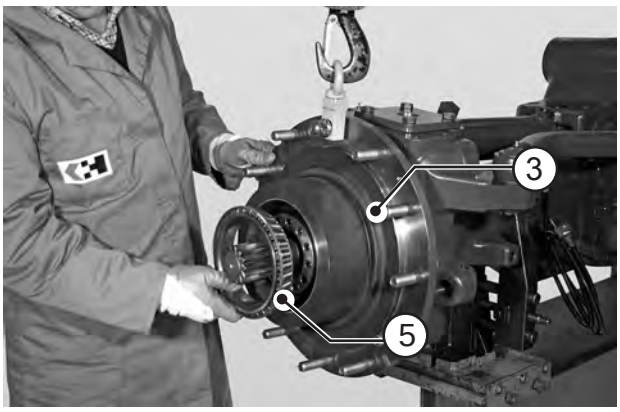

GB d

Remove the external bearing (5) and the hub (3).

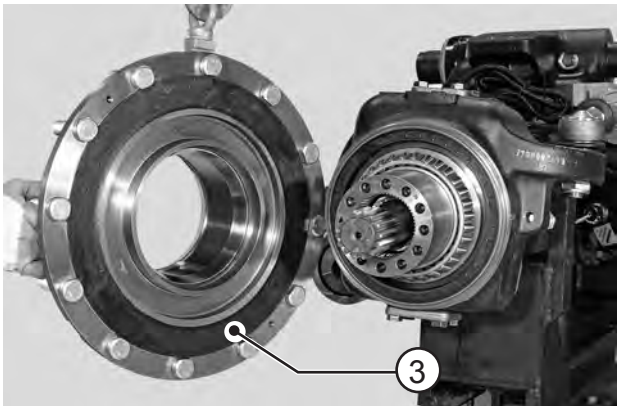

GB e

Remove the complete hub (3).

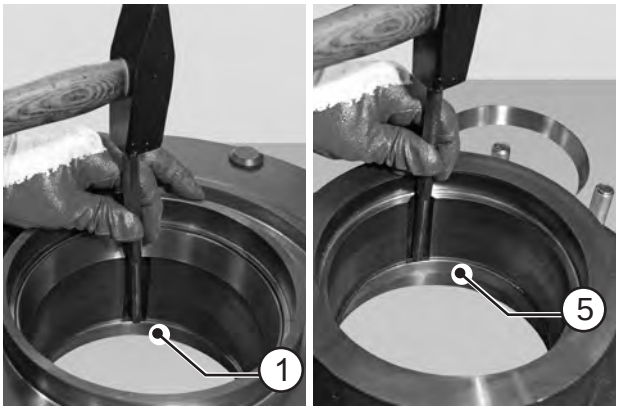

GB f

Remove the thrust blocks (5)(1) from the bearings and forcing a puller into the appropriate slots on the hub.
NOTE. Avoid crawling or deformation of the thrust blocks.

a

I Asportare l'anello elastico (6) di ritegno della corona (7).

D Den Kolbenring (6) vom Kranz (7) abnehmen.

E Sacar el anillo elastico (6) de retencion de la corona (7).

F Enlever l'anneau elastique (6) de retenue de la couronne (7).

b

I Rimuovere la flangia portacorona (8).

D Kranzhalterflansch (8) abnehmen.

E Remover la brida portacorona (8).

F Remover la flasque porte-couronne (8).

c

I Imbragare il mozzo portaruota (3).
Utilizzando un estrattore, sfilare parzialmente il mozzo portaruota (3).

D Die Radnabe (3) einschlingen.
Mit einem Abzieher, die Radhalternabe (3) etwas herausschieben.

E Embragar el cubo de rueda (3).
Utilizando un extractor, extraer parcialmente el cubo portarruedas (3).

F Élinguer le moyeu porte-roue (3).
A l'aide d'un extracteur, extraire partiellement le moyeu porte-roue (3).

d

I Asportare il cuscinetto esterno (5) e mozzo portaruota (3).

D Äußeres Lager (5) und Radhalternabe (3) abnehmen.

E Sacar el cojinete exterior (5) y cubo portarruedas (3).

F Enlever le palier externe (5) et le moyeu porte-roue (3).

e

I Sfilare il mozzo portaruota (3).

D Radhalternabe (3) herausziehen.

E Extraer el cubo portarruedas (3).

F Extraire le moyeu porte-roue (3).

f

I Rimuovere le ralle (5)(1) dei cuscinetti utilizzando un estrattore inserito nelle cave predisposte sul mozzo.
NOTA. Evitare impuntamenti e deformazione delle ralle.

D Die äußeren Scheiben (5)(1) der Lager mit einem Abzieher durch die Nabenlöcher herausschlagen.
BEMERKUNG. Verformungen zu vermeiden.

E Remover las ranguas exteriores (5)(1) de los cojinetes utilizando un extractor para clavijas insertado en las ranuras predispuestas en el cubo.
NOTA. Evitar danàos y deformaciones de las ranguas.

F Enlever les crapaudines externes (5)(1) des paliers à l'aide d'une extracteur inserè dans les évidages sûr le moyen.
NOTE. Éviter talonnage et déformation des crapaudines.

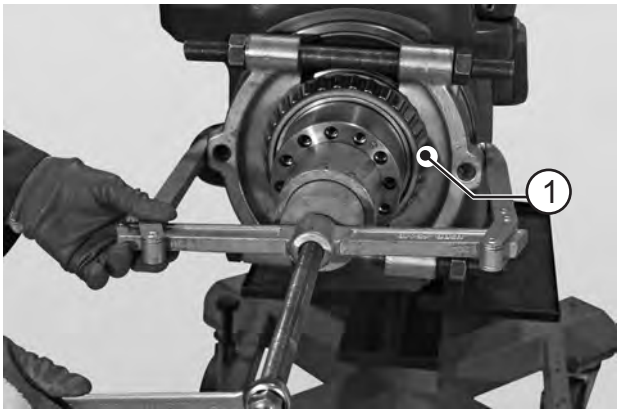

GB a

Using a puller, remove the bearing (1).

GB b

Protect the inside bearing seat with a metal ring or the bearing race

GB c

Using two levers, extract the seal ring (2).

a

I Utilizzando un estrattore rimuovere il cuscinetto (1).

D Mit einem Abzieher inneres Lager (1) abziehen.

E Usando un extractor sacar el rodamiento (1).

F Avec un extracteur òter le palier (1).

b

I Proteggere la sede del cuscinetto interno con un anello metallico o la stessa ralla del cuscinetto.

D Den Sitz des internen Lagers durch einen Metallring oder die Lagerscheibe selbst schützen

E Proteger el alojamiento del cojinete interno con un anillo metálico o con la misma corona de giro del cojinete.

F Protéger le logement du palier à l'intérieur avec une bague métallique ou avec la butée du palier.

c

I Utilizzando due leve estrarre l'anello di tenuta (2).

D Den Dichtring (2) mithilfe von zwei Hebeln ausheben.

E Utilizando dos palancas, extraer el anillo de estanqueidad.

F Extraire la bague de fixation à l'aide de deux leviers.

ASSEMBLY - ASSEMBLAGGIO - MONTIEREN - ENSAMBLAR - ASSEMBLER

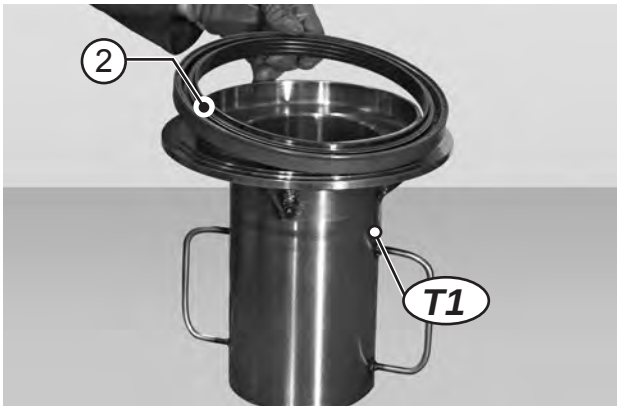

GB a

Position the sealing ring (2) on the special tool T1.
Check that the ring (2) is correctly oriented.

GB b

Position tool T1 and press the sealing ring (2) into its seat.
IMPORTANT: Check the flatness of seal ring.

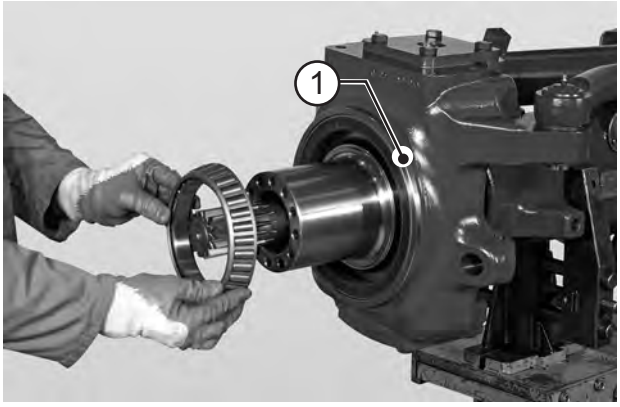

GB c

Install the internal bearing (2).
NOTE Move the bearing to the limit stop by hammering lightly all around the edge.

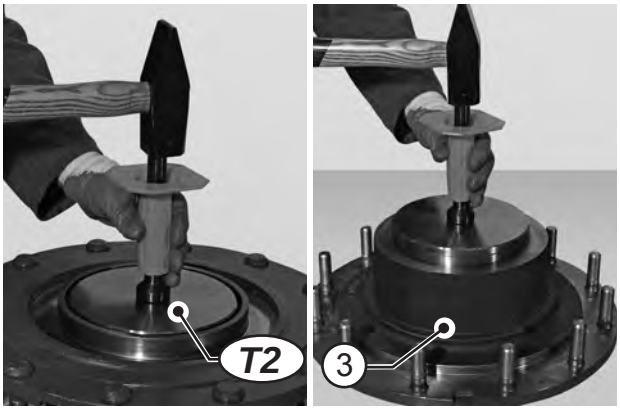

GB d

Position the upper part of tool T2 and press the thrust blocks (1) (5) into the hub (3) all the way down.

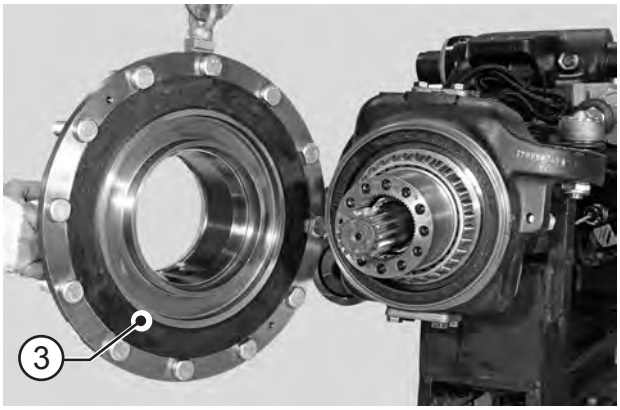

GB e

Install the wheel hub (3).
NOTE Move the bearing to the limit stop by hammering lightly all around the edge.

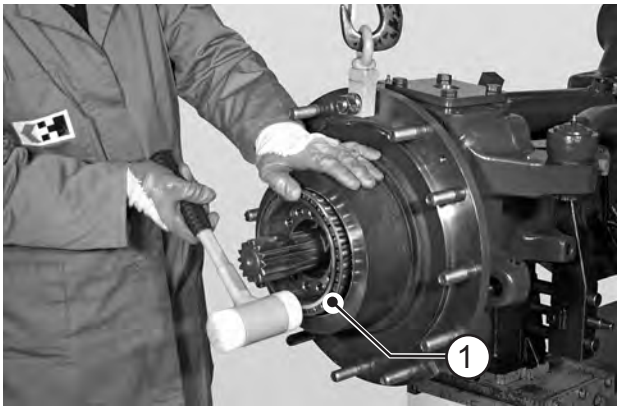

GB f

Install the external bearing (1).
NOTE. Using a plastic hammer, drive the bearing to the limit stop by lightly hammering around the edge.

a

I Posizionare l'anello di tenuta (2) sull'attrezzo speciale T1.
Controllare l'orientamento dell'anello (2).

D Den Kolbenring (2) in das Werkzeug T1 montieren.
Einbaurichtung des Ringes (2) beachten.

E Posicionar el segmento de compresión (2) en la herramienta T1.
Controlar la orientaciòn del anillo (2).

F Placer la bague d'étanchéité (2) dans l'outil T1.
Contròler le sens de la bague (2).

b

I Posizionare l'attrezzo T1 e pressare in sede l'anello di tenuta (2).
ATTENZIONE: Controllare la planarita dell'anello di tenuta.

D Das Werkzeug T1 positionieren und den Kolbenring (2) in seinen Sitz pressen.
ACHTUNG: Die Ebenheit den Dichtring.

E Posicionar la herramienta T1 y presionar en su alojamiento el segmento de compresión (2).
ATENCIÓN: Controlar la planaridad de el segmento de compresión.

F Placer l'outil T1 et presser dans son logement la bague d'étanchéité (2).
ATTENTION: Contrôler l'uniformite de l'anneau d'étanchéité.

c

I Montare il cuscinetto interno (2).
NOTA. Mandare a fondo corsa il cuscinetto con leggeri colpi di mazzuolo distribuiti su tutta la circonferenza.

D Innere Lager (2) montieren.
BEMERKUNG. Mit auf den Umfang verteilten leichten Schlägen eines Gummihammers das Lager bis zum Anschlag einsetzen.

E Montar el rodamiento (2).
NOTA. Mandar a tope el rodamiento con ligeros golpes de mar tillo repar tidos sobre toda la circunferencia.

F Monter le palier (2).
REMARQUE. Envoyer en butèe le palier avec de légers coups de maillet distribuès tout autour de la circonférence.

d

I Posizionare la parte superiore dell'attrezzo T2 e pressare a fondo le ralle (1)(5) nel mozzo portaruota (3).

D Das obere Teil des Werkzeugs T2 positionieren und die Scheiben (1)(5) in die Radhalternabe (3) fest eindrücken.

E Posicionar la parte superior T2 de la herramienta y presionar a fondo las ranguas (1)(5) en el cubo portarruedas (3).

F Placer la partie supérieure de l'outil T2, puis presser à fond les crapaudines (1)(5) du moyeu porte-roue (3).

e

I Montare il mozzo portaruota (3).
Mandare in battuta.
NOTA. Mandare a fondo corsa il cuscinetto con leggeri colpi di mazzuolo distribuiti su tutta la circonferenza.

D Radhalternabe montieren (3).
Bis zum Anschlag schieben.
BEMERKUNG. Mit auf den Umfang verteilten lei - chten Schlägen eines Gummihammers das Lager bis zum Anschlag einsetzen.

E Montar la maza lleva-rueda (3).
Llevar a tope.
NOTA. Mandar a tope el rodamiento con ligeros golpes de mar tillo repar tidos sobre toda la circunferencia.

F Monter le moyeu porte-roue (3).
Envoyer en butée.
REMARQUE. Envoyer en butèe le palier avec de légers coups de maillet distribuès tout autour de la circonférence.

f

I Montare il cuscinetto esterno (1).
NOTA. Mandare a fondo corsa il cuscinetto con leggeri colpi di mazzuolo distribuiti su tutta la circonferenza.

D Äußeres Lager (1) montieren.
BEMERKUNG. Das Lager bis zum Anschlag einsetzen; dazu einen Gummihammer verwenden und entlang der Kreislinie einschlagen.

E Montar el cojinete exterior (1).
NOTA. Llevar al fondo de carrera el cojinete con ligeros golpes de martillo distribuidos en toda la circunferencia.

F Monter le palier externe (1).
NOTE. Envoyer le palier en fin de course avec des petits coups de maillet distribués sur toute la circonférence.

GB a

Insert the flange (9) in the crown (11).

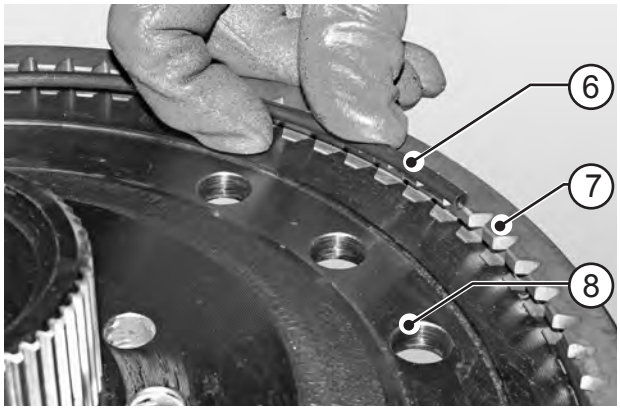

GB b

Insert the snap ring (6) in order to fix the flange (8) in the crown (7).
NOTE. Carefully check that ring (6) is properly inserted in the slot of the crown (7)

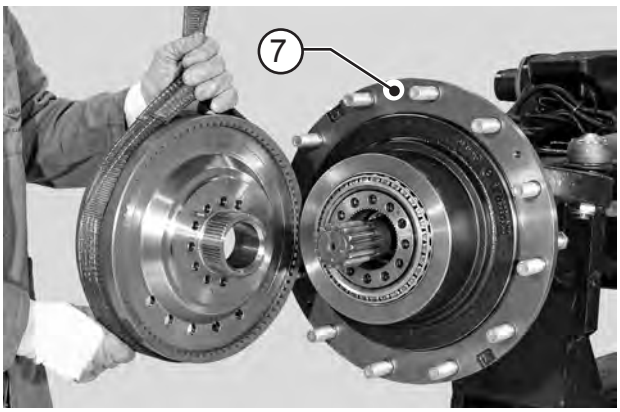

GB c

Fit the complete crown flange (7).
NOTE. 1 - Match up the punch marks on the joint case and the crown wheel carrier flange.
2 - In order to fasten the flange (7), use a plastic hammer and alternately hammer on several equidistant points.

GB d

If insertion is difficult, use a punch with a suitable diameter to drive it seat.

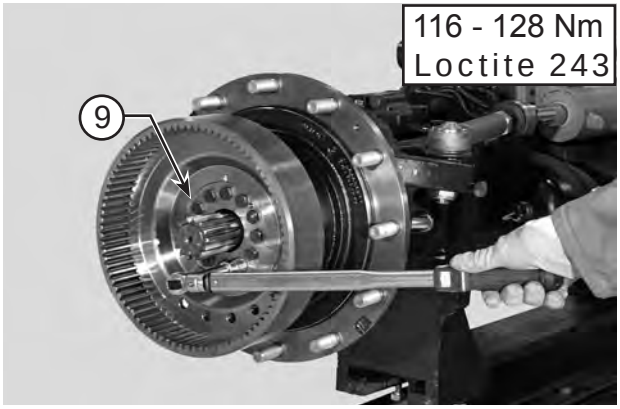

GB e

Coat the nuts (9) with Loctite 243 and screw them.
Tighten nuts (9) in two stages,using the criss-cross method.
Final torque wrench setting: 116 - 128 Nm

GB f

With the help of a drift, insert the bearing cone (13) into the cover (14).

a

I Inserire la flangia (9) nella corona (11).

D Flansch (9) in den Kranz (11) montieren.

E Introducir la brida (9) en la corona (11).

F Introduire la flasque (9) dans la couronne (11).

b

I Inserire l'anello elastico (6) per fissare la posizione della flangia (8) nella corona (7).
NOTA. Controllare attentamente l'inserimento dell'anello (6) nella cava della corona (7).

D Den Kolbenring (6) einsetzen, um die Position des Flansches (8) im Kranz (7) zu sichern.
BEMERKUNG. Sorgfältig kontrollieren, ob der Ring (6) in der Nut des Kranzes (7) richtig eingesetzt ist.

E Introducir el anillo elàstico (6) para fijar la posición de la brida (8) en la corona (7).
NOTA. Controlar atentamente la inserción del anillo (6) en la ranura de la corona (7).

F Introduire l'anneau élastique (6) pour fixer la position de la flasque (8) dans la couronne (7).
NOTE. Contròler soigneusement l'introduction de la bague (6) dans le creux de la couronne (7).

c

I Montare la flangia portacorona (7) completa.
NOTA. 1 - Far collimare le punzonature di montaggio poste sulla scatola snodo e flangia porta corona.
2 - Per mandare in battuta la flangia (7), usare un mazzuolo in materiale plastico battuto alternativamente in più punti equidistanti.

D Kompletter Kranzhlaterflansch (7) montieren.
BEMERKUNG. 1 - Dafür sorgen, dass die Lochstanzungen zur Montage auf dem Gelenkgehäuse und der Kranzhalterflansch übereinstimmen. 2 - Um den Flansch (7) bis zum Anschlag einzusetzen, einen Gummihammer verwenden undabwechselnd an gleich entfernten Stellen einschlagen.

E Montar la brida portacorona (7).
NOTA. 1 - Hacer concordar los punzonados de montaje situados sobre la caja articulada y la brida portacorona. 2 - Para llevar a tope la brida (7) usar un martillo de material plástico golpeándolo alternativamente en varios puntos equidistantes.

F Monter la flasque porte-couronne (7) compléte.
NOTE. 1 - Faire coïncider les repères poinçonnés de montage situés sur la boîte d'articulation et la bride porte-couronne.
2 - Pour envoyer la flasque (7) en butée, utiliser un maillet en matière plastique en battant sur plusieurs points èquidistants.

d

I Se l'inserimento risulta difficile utilizzare un punzone del diametro adatto e mandare a fondo corsa.

D Sollte das Einfügen mit Schwierigkeiten verbunden sein, verwenden Sie eine Punze geeigneten Durchmessers und fügen Sie diese bis zum Anschlag ein.

E Si resulta difícil de meter utilizar un punzón del diámetro adecuado y empujar hasta el tope.

F Si l'introduction se révèle difficile, utiliser un poinçon d'un diamètre adéquat et aller jusqu'en fin de course.

e

I Spalmare i dadi (9) con Loctite 243 ed avvitare.
Serrare i dadi (9) in due tempi e con il metodo del serraggio incrociato.
Coppia di serraggio finale: 116 - 128 Nm

D Die Muttern (9) mit Loctite 243 einschmieren und festschrauben.
Schritten fest ziehen.
Anzugsmoment am Ende: 116 - 128 Nm

E Untar los tornillos (9) con Loctite 243 y atornillarlos.
Apretar los tornillos (9) en dos tiempos con el metodo de torsion cruzada.
Par de torsion final: 116 - 128 Nm.

F Enduire les écrous (9) avec du Loctite 243 puis visser.
Serrer les écrous (9) en deux temps avec la méthode du serrage croisé.
Couple de serrage final: 116 - 128 Nm

f

I Utilizzando un punzone, inserire nel coperchio (14) il cuscinetto (13).

D Mit dem Dübel in den Deckel (14) den Lager (13) einsetzen.

E Utilizando un punzón introducir en la tapa (14) el cojinete (13).

F A l'aide d'un poussoir introduire dans le couvercle (14) le palier (13).

GB a

Fit the planetary gear (12) onto the planetary gear cover.

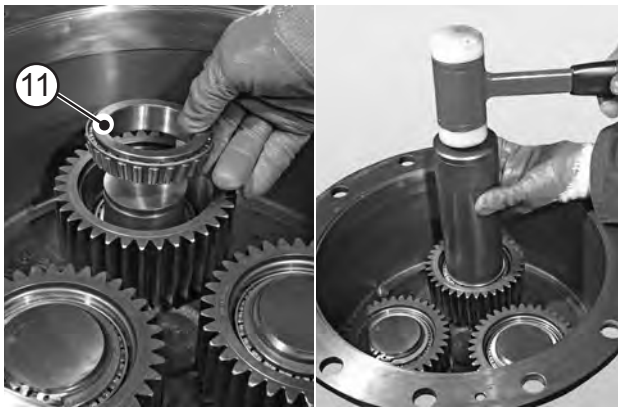

GB b

With the help of a drift, insert the bearing cone (11) into the cover (14).

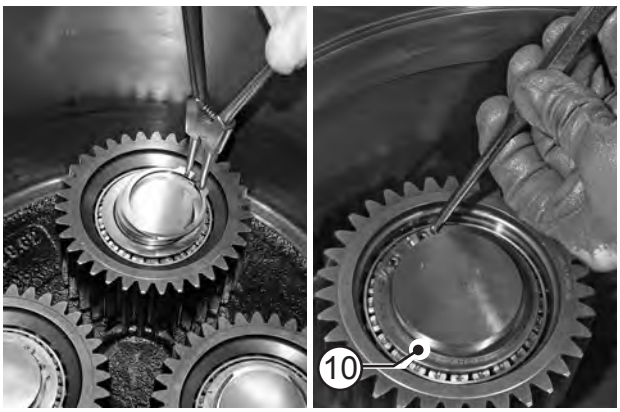

GB c

Lock into position the planetary gears (12) with the snap rings (10).
Carefully check that ring (10) is properly inserted.

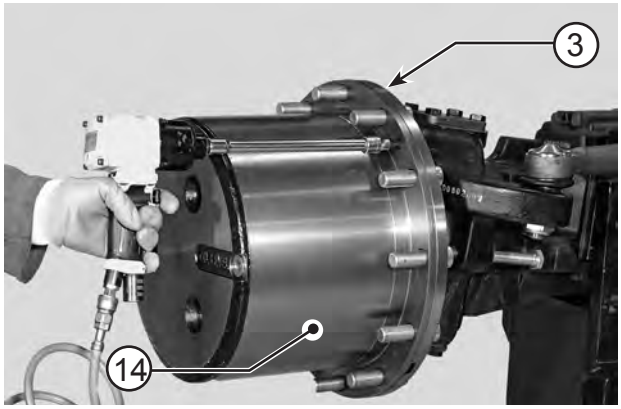

GB d

Fit the planetary gear cover (14) onto the wheel hub (3).
CAUTION! Check that the O-ring (4) is in good condition and in position.

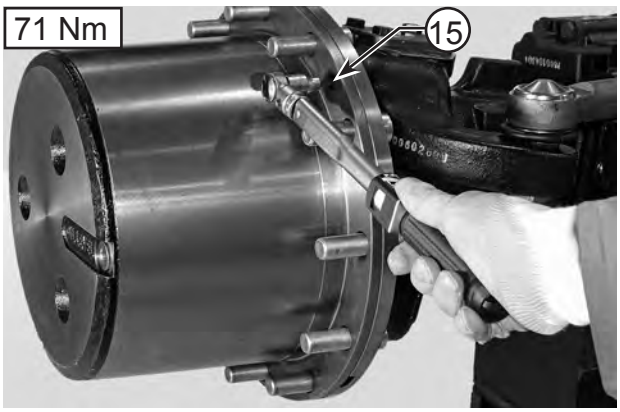

GB e

Lock the planetary carrier cover (15) by tightening the screws
Torque wrench setting for screws: 71 Nm.

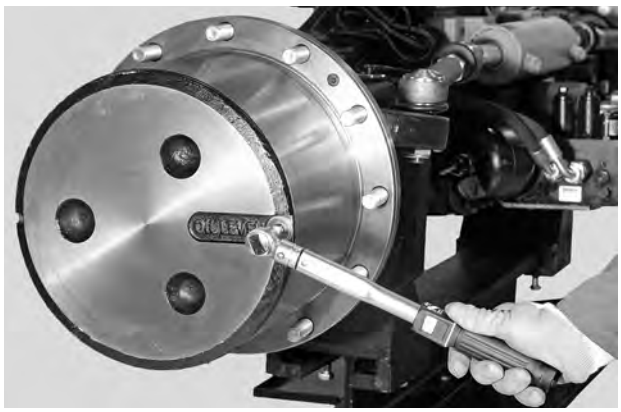

GB f

Install the oil-level plug.
Torque wrench setting for screws: 90 Nm

a

I Montare sui perni del coperchio portasatelliti gli ingranaggi planetari (12).

D Auf die Stifte des Deckels des Planetenradhalters die Planetengetriebe (12) montieren.

E Montar sobre los pernos de la tapa lleva-satelites los engranajes planetares (12).

F Monter sur les pivots du couvercle porte-satellites les engrenages planétaires (12).

b

I Utilizzando un punzone, inserire nel coperchio (14) il cuscinetto (11).

D Mit dem Dübel in den Deckel (14) den Lager (11) einsetzen.

E Utilizando un punzón introducir en la tapa (14) el cojinete (11).

F A l'aide d'un poussoir introduire dans le couvercle (14) le palier (11).

c

I Fissare la posizione degli ingranaggi satelliti (12) con gli anelli elastici (10).
Controllare attentamente l'inserimento dell'anello elastico (10)

D Die Position der Planetengetriebe (12) mit den Kolbenringen (10) festigen.
Controlar atentamente la inserción del anillo (10)

E Fijar la posiciòn de los engranajes satelites (12) con los anillos elasticos (10).
Controlar atentamente la inserción del anillo (10)

F Fixer les engrenages porte-satellites (12) à leur place avec les anneaux ressorts (10).
Contróler soigneusement l'introduction de la bague (10).

d

I Montare il coperchio portasatelliti (14) sul mozzo portaruota (3).
ATTENZIONE! Controllare lo stato e la posizione della guarnizione OR (4).

D Den Deckel des Planetenradhalters (14) auf die Nabe des Radhalters (3) montieren.
ACHTUNG! Den Zustand und die Position des ORinges (4) kontrollieren.

E Montar la tapa lleva-satelites (14) sobre el cubo lleva rueda (3).
CUIDADO! Controlar el estado y la posición de la junta OR (4).

F Monter le couvercle porte-satellite (14) sur le moyeu porte-roue (3).
ATTENTION! Contróler l'état et la position de la garniture OR (4).

e

I Bloccare il coperchio portasatelliti (14) con le viti (15).
Coppia di serraggio viti: 71 Nm

D Planetenhalterdeckel (14) mit den Schraube (15) fest-
schrauben. Anzugsmoment der Schrauben: 33 - 53 Nm

E Bloquear la tapa portasatélites (14) con los tornillos (15). Par de torsiòn tornillos: 71 Nm

F Bloquer le couvercle porte-satellites (14) avec les vis (15). Couple de serrage vis: 71 Nm

f

I Montare il tappo di livello olio.
Coppia di serraggio viti: 90 Nm

D Ölpegelstopfen montieren.
Anzugsmoment der Schrauben: 90 Nm

E Montar el tapón de carga de nivel aceite.
Par de torsiòn tornillos: 90 Nm

F Monter le bouchon de la jauge d'huile.
Couple de serrage vis: 90 Nm

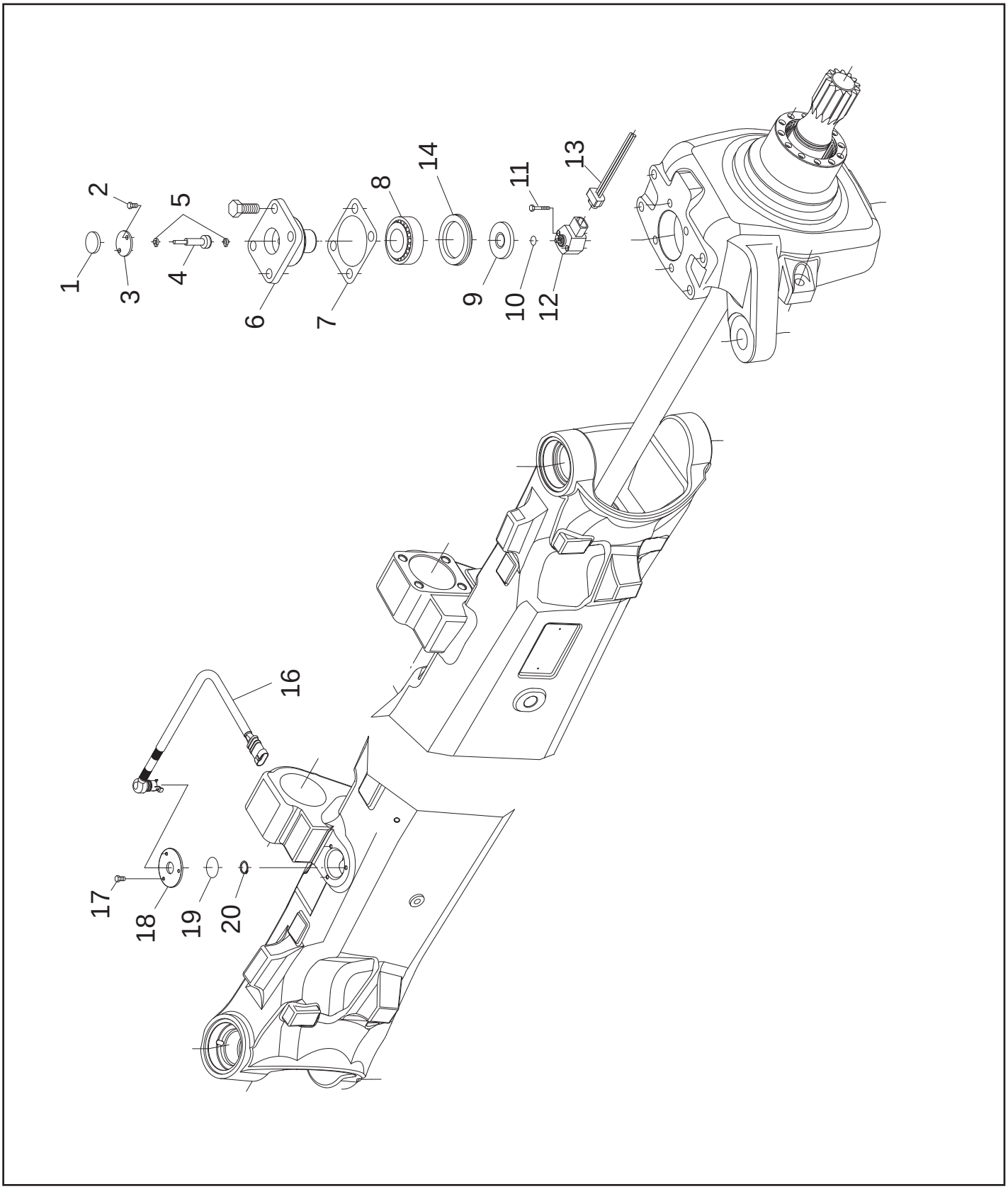
1
2
3
4
5
6
7
8
9
10
11
12
13
14
16
17
18
19
20

DISASSEMBLY - DISASSEMBLAGGIO - DEMONTIEREN - DESENSAMBLAR - DÉSASSEMBLER

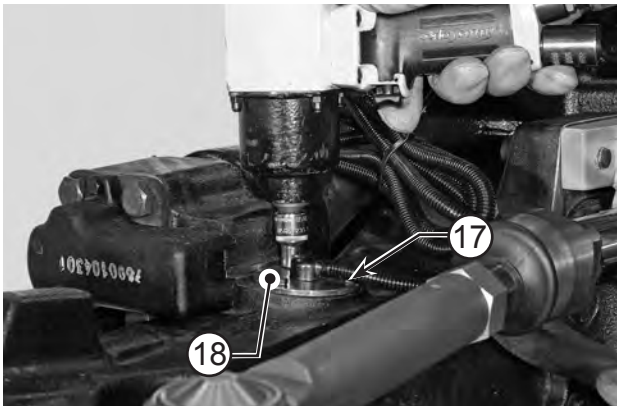

GB a

Slacken and remove the fastening screws (17) from the connector carrier cover (18).

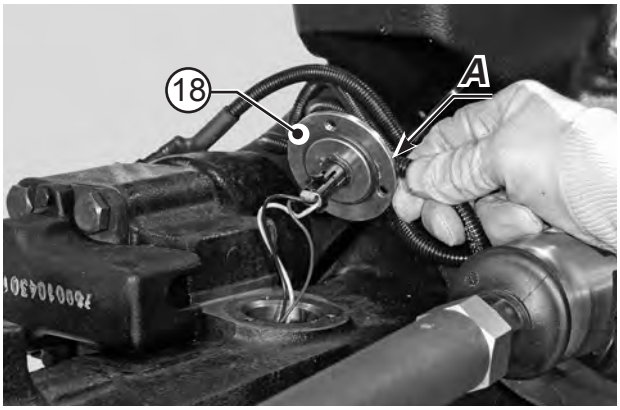

GB b

Remove from the axial body, the connector carrier cover (18). Using a screwdriver, unhook the connector catch “A” and disassemble.

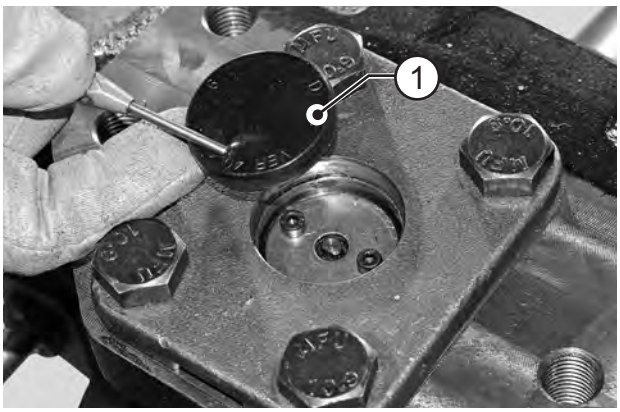

GB c

Remove the top cap (1).
NOTE. The cap must be replaced each time the unit is disassembled.

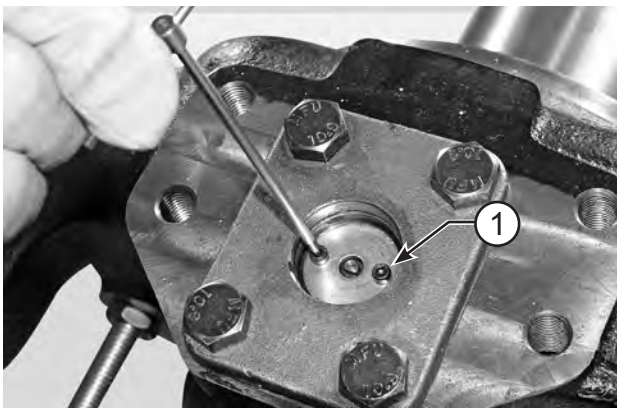

GB d

Unloose and remove the fittin screw (1).

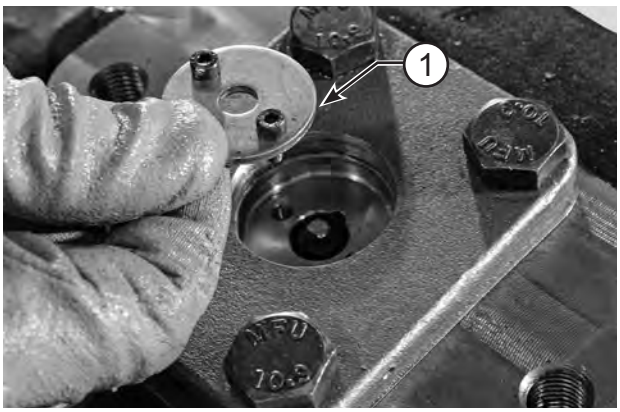

GB e

Remove the cover (3).

GB f

Unloose and remove the fittin screws from the articulation pin (6). Remove the upper articulation pin (6) complete with front seal ring (14) and shims (7).

a

I Allentare e rimuovere le viti (17) di fissaggio del coperchio porta connettore (18).

D Die Befestigungsschrauben (17) des Steckeraufnahmedeckels (18) lösen und entfernen

E Aflojar y quitar los tornillos (17) de fijación de la tapa porta conector (18).

F Desserrer et enlever les vis (17) de fixation du couvercle porte connecteur (18)

b

I Asportare dal corpo assale il coperchio porta connettore (18). Utilizzando un cacciavite sganciate il fermo “A” del connettore e disassemblare.

D Den Steckeraufnahmedeckel (18) vom Achsgehäuse entfernen. Mithilfe eines Schraubenziehers die Halterung des Steckers “A” ausrasten und diesen ausbauen.

E Sacar la tapa del porta conector (18) del cuerpo del eje. Utilizando un destornillador, desenganchar el tope del conector “A” y desensamblar.

F Retirer le couvercle porte connecteur (2) du corps de l’essieu. Décrocher la butée “A” du connecteur et démonter le tout à l’aide d’un tournevis.

c

I Rimuovere il tappo superiore (1).
NOTA. Il tappo deve essere sostituito ad ogni smontaggio.

D Unterer Stopfen (1) abnehmen.
BEMERKUNG. Der Stopfen muß jedesmal ausgewechselt werden, wenn er abmontiert wird.

E Remover la tapa superior (1).
NOTA. La tapa debe de ser sobstituida a cada desmontaje.

F Enlever le bouchon supéieur (1).
NOTE. Le bouchon doit étre remplacé á chaque démontage.

d

I Allentare ed asportare la vite (1).

D Schrauben (1) lockern und abschrauben.

E Aflojar y sacar los tornillo de retenciòn (1).

F Desserrer et enlever le vis de fixation (1).

e

I Rimuovere il coperchio (3).

D Den Deckel (3) abnehmen.

E Remover la tapa (3).

F Enlever le couvercle (3).

f

I Allentare ed asportare le viti di ritegno del perno snodo (6).
Rimuovere il perno snodo superiore (6) completo di anello di tenuta frontale (14) e spessori (7).

D Schrauben des oberen Gelenkstiftes (6) lockern und abschrauben.
Oberen Gelenkstift (6) samt frontalen Kolbenring (14) und Zwischenscheiben (7) abnehmen.

E Aflojar y sacar los tornillos de retenciòn de la ròtula (6).
Remover el perno rótula superior (6) completo con anillo de retén frontal (14) y espesores presente (7).

F Desserrer et enlever les vis de fixation du tourillon d’articulation (6). Enlever le tourillon supérieur d ’articulation (6) équipé de la bague d ’étanchéité frontale (14) et des cales (7).

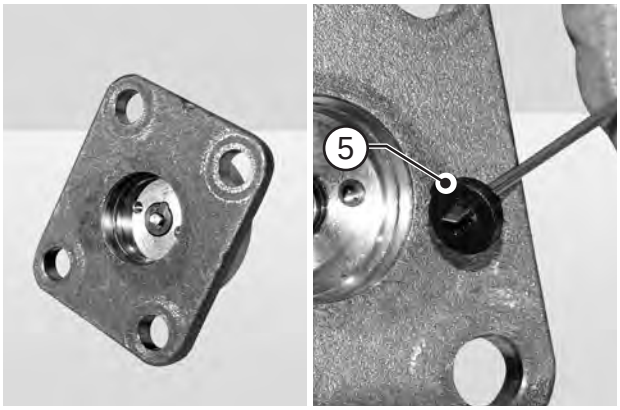

GB a

Remove the rubber joint (5).

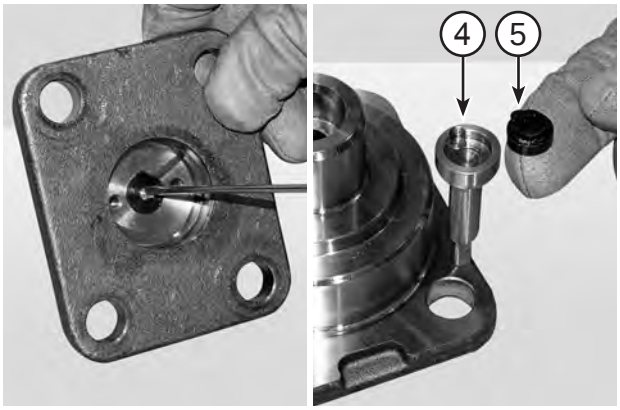

GB b

Remove the drag shaft of the sensor (4) and the rubber joint (5).

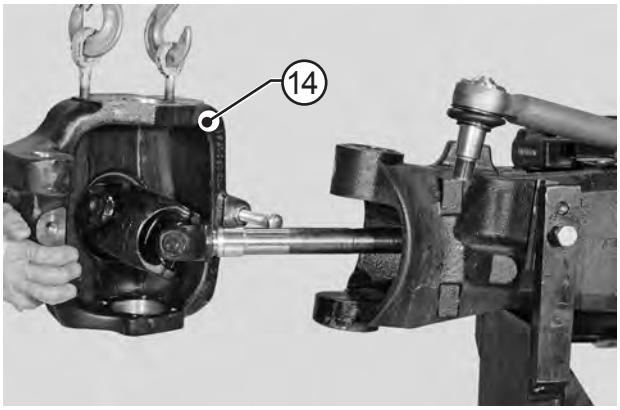

GB c

Remove the complete steering case (14).
For details, see: << HOW TO REMOVE THE COMPLETE STEERING CASE>>

GB d

Remove the sheet sensor (9).

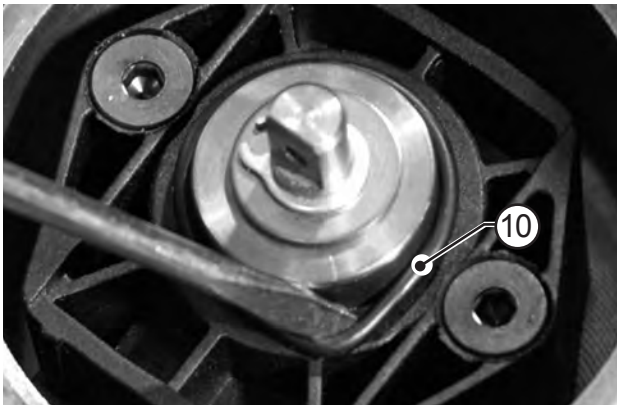

GB e

Remove the O-Ring (10).

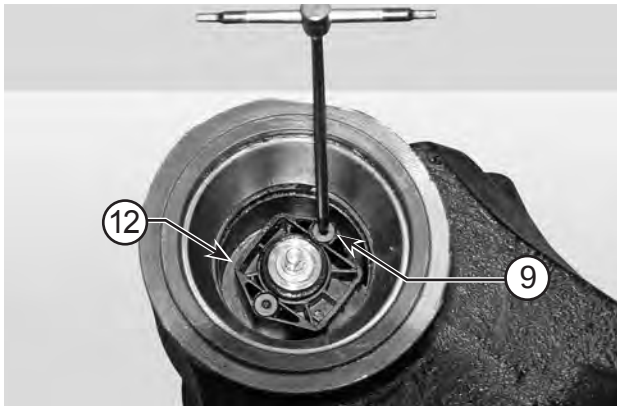

GB f

Remove the screws (9) fastening the steering sensor.
Remove the steering sensor (12).

a

I Rimuovere il giunto in gomma (5).

D Gelenk (5) abnehmen.

E Remover la junta (5).

F Enlever le joint (5).

b

I Rimuovere l'asta di trascinamento sensore (4) e il giunto in gomma (5).

D Nehmen Sie den Mitnehmerzapfen des Sensors (4) und das Gelek (5) abnehmen.

E Quitar la varilla de arrastre del sensor (4) y la junta (5).

F Retirer la tige d'entraînement du senseur (4) le joint (5).

c

I Rimuovere il gruppo snodo completo (14).
Per i dettagli, vedere: << RIMOZIONE SCATOLA SNODO COMPLETA>>

D Komplettes Gelenkaggregat (14) abnehmen.
Einzelheiten im Paragraph:<< KOMPLETTES GELENKGEHÄUSE ABMONTIEREN>>

E Remover el grupo ròtula completo (14).
Para los detalles, vease: << REMOCION CARTER DE ROTULA COMPLETO>>

F Enlever le groupe d'articulation complet (14).
Pour tout détail, voir:<< DEPOSE DU BOITIER ARTICULATION COMPLET>>

d

I Rimuovere la piastrina sensore (9).

D Die Scheibe (9) abmontieren.

E Sacar la placa del sensor (9).

F Enlever le plaquette (9).

e

I Rimuovere l'anello OR (10).

D Den O-Ring (10) abnehmen.

E Remover la junta OR (10).

F Enlever la garniture OR (10).

f

I Rimuovere le viti di fissaggio (9) del sensore sterzo.
Rimuovere il sensore dello sterzo (12).

D Die Befestigungsschrauben (9) des Sensors der Lenkung entfernen.
Den Sensor der Lenkung (12) entfernen.

E Retirar los tornillos de fijación (9) del sensor de dirección.
Retirar el sensor de la dirección (12).

F Enlever les vis de fixation (9) du capteur de la direction.
Enlever le capteur de la direction (12).

ASSEMBLY - ASSEMBLAGGIO - MONTIEREN - ENSAMBLAR - ASSEMBLER

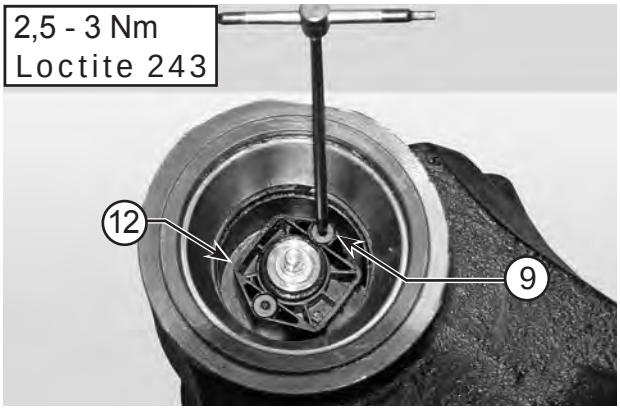

GB a

Apply Loctite 243 to the screws (11) and tighten.
Fasten the sensor (12) in position, tightening the screws (11) to 2,5 - 3 Nm.

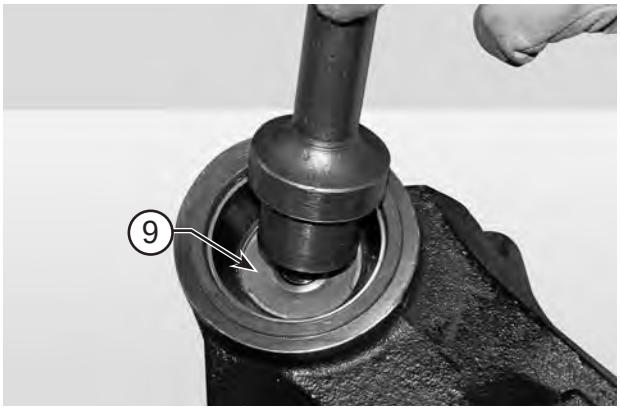

GB b

Install the sheet (9) in the right position.

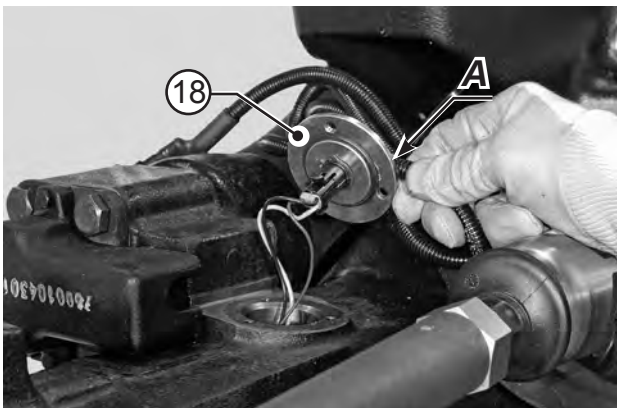

GB c

Push in the two connectors.
Note: make sure that the safety catch is in position.

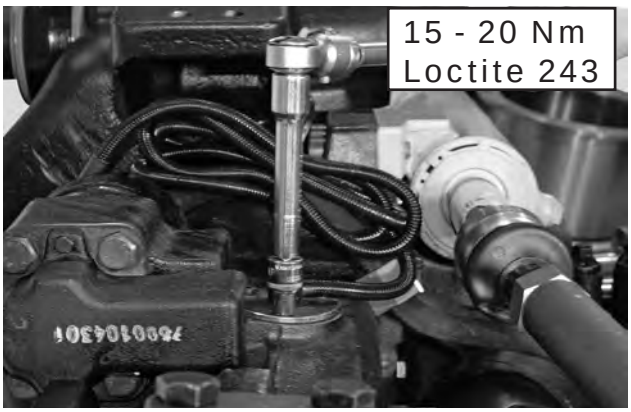

GB d

Coat the nuts (9) with Loctite 243 and screw them.
Tighten nuts (9) in two stages,using the criss-cross method.
Final torque wrench setting: 15 - 20 Nm
CAUTION! Check that the O-ring is in good condition and in position.

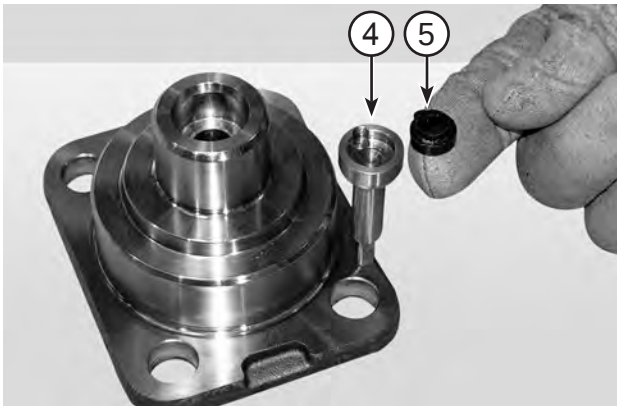

GB e

Lubricate and insert the sensor pin (4) and rubber joint (5).

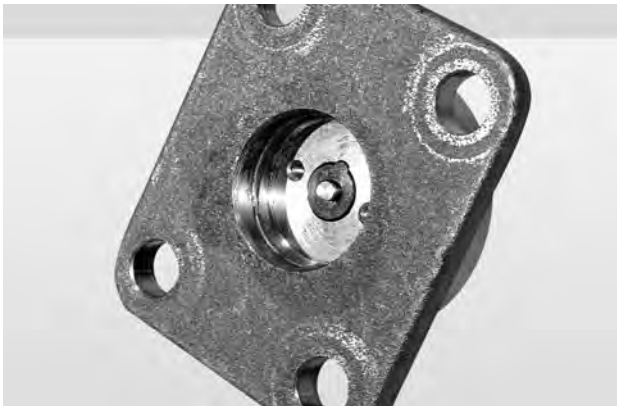

GB f

Insert the rubber joint (5).

a

I Spalmare le viti (11) con Loctite 243 ed avvitarle. Fissare la posizione del sensore (12) serrando le viti (11) a 2,5 - 3 Nm.

D Schrauben (11) mit Loctite 243 schmieren und im Kreuz anziehen.
Den Sensor (12) mit den Schrauben (11) auf Anzugsmoment 2,5 - 3 Nm festspannen.

E Pasar sobre los tornillos (11) Loctite 243 y atornillarlos. Fijar la posición del sensor (12) apretando los tornillos (11) a 3 Nm.

F Enduire les vis (11) avec du Loctite 243, et les visser en les serrant.
Fixer la position du capteur (12) en serrant les vis (11) à 3 Nm.

b

I Inserire la piastrina sensore (9) nella giusta posizione.

D Die Scheibe (9) montieren.

E Montar la piastra del sensor (9).

F Monter le plaquette (9).

c

I Facendo pressione collegare i due connettori.
NOTA Assicurarsi che il dente di sicurezza sia in posizione corretta.

D Die beiden Stecker durch Druck miteinander verbinden. HINWEIS: Sicher stellen, dass der Sicherungsstift sich in der richtigen Position befindet.

E Conectar los dos conectores haciendo presión.
NOTA: Asegurarse de que el diente de seguridad esté en posición correcta.

F Brancher les deux connecteurs en appuyant dessus.
NOTE S'assurer que la dent de sûreté soit dans la position voulue.

d

I Spalmare i dadi (9) con Loctite 243 ed avvitare.
Serrare i dadi (9) in due tempi e con il metodo del serraggio incrociato.
Coppia di serraggio finale: 15 - 20 Nm
ATTENZIONE! Controllare lo stato e la posizione della guarnizione OR .

D Die Muttern (9) mit Loctite 243 einschmieren und festschrauben. Schritten fest ziehen.
Anzugsmoment am Ende: 15 - 20 Nm
ACHTUNG! Den Zustand und die Position des ORinges kontrollieren.

E Untar los tornillos (9) con Loctite 243 y atornillarlos.
Apretar los tornillos (9) en dos tiempos con el metodo de torsion cruzada.
Par de torsion final: 15 - 20 Nm.
CUIDADO! Controlar el estado y la posición de la junta OR.

F Enduire les écrous (9) avec du Loctite 243 puis visser.
Serrer les écrous (9) en deux temps avec la méthode du serrage croisé.
Couple de serrage final: 15 - 20 Nm
ATTENTION! Contróler l'état et la position de la garniture OR.

e

I Lubrificare ed Inserirel'asta sensore (4) giunto in gomma (5).

D Gelenk (5) un Sensorstange fetten und einfügen (4).

E Lubricar y poner el eje del sensor (4) y la junta (5).

F Lubrifier et insérer le tigé du sensor (4) et le joint (5).

f

I Inserire il giunto in gomma (5).

D Gelenk (5) richten.

E Poner la junta (5).

F Positionner le joint (5).

GB a

CAUTION! Check that the O-ring is in good condition and in position.

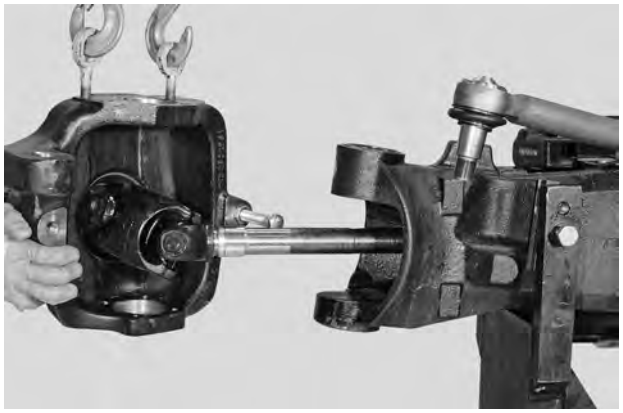

GB b

Pay attention don't damage the dust cover rings and the sealing rings.
Install the steering case.
For details, see: << HOW TO ASSEMBLE THE COMPLETE STEERING CASE>>

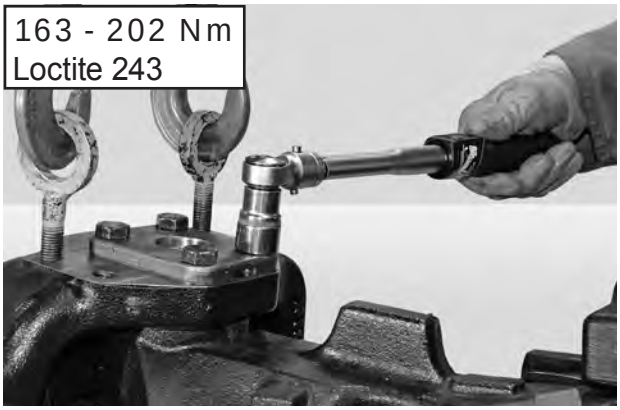

GB c

Tighten the new fittin screws (19) of bottom articulation pins in sequence using the cross tightening method.
Torque wrench setting: 163 - 202 Nm

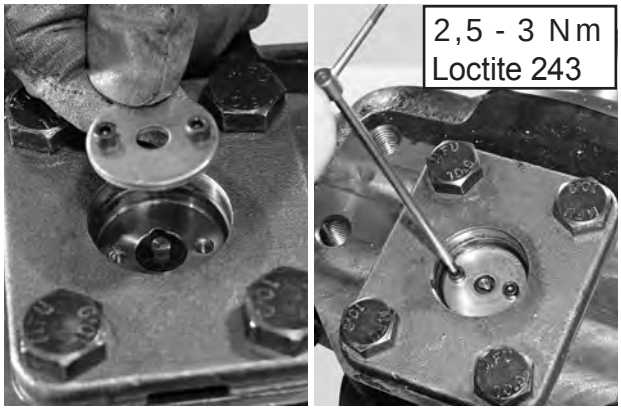

GB d

Install the cover (3).
Apply LOCTITE 243 to the screws (2) and screw into the relative holes. Tighten to a torque of 2,5 - 3 Nm.

GB e

Fit the new top cap (1).

a

I Posizionare il perno del sensore (12) conl'intaglio rivolto verso il differenziale.
ATTENZIONE! Controllare lo stato e la posizione della guarnizione OR.

D ACHTUNG! Den Zustand und die Position des ORinges kontrollieren.

E CUIDADO! Controlar el estado y la posición de la junta OR .

F ATTENTION! Contròler l'état et la position de la garniture OR.

b

I Prestare molta attenzione per non danneggiare gli anelli parapolvere e di tenuta.
Installare la scatola snodo.
Per i dettagli, vedere: << MONTAGGIO SCATOLA SNODO COMPLETA>>

D Vorsicht: Staubschutzringe und Dichtungsringe nicht beschaédigen.
Das Gelenkgehäuse-Aggregat montieren.
Einzelheiten im Paragraph:<< KOMPLETTES GELENKGEHAUSE MONTIEREN>>

E Tener mucho cuidado a fin de no danàr los segmentos de protecciòn.Montar el grupo caja de ròtula.
Para los detalles, vease: << MONTAJE CARTER DE ROTULA COMPLETO>>

F Faire très attention à ne pas abòmer les bagues antipoussiére et d'étanchéitè .
Monter le groupe du boîtier articulation.
Pour tout détail, voir:<< MONTAGE DU BOITIER ARTICULATION COMPLET>>

c

I Serrare in sequenza con il metodo incrociato, le nuove viti (19) di ritegno dei perni snodo inferiore.
Coppia di serraggio: 163 - 202 Nm

D Entgegengesetzt und abwechselnd die Schrauben (19) der unteren Gelenkstiften festschrauben.
Anzugsmoment: 163 - 202 Nm

E Apretar en secuencia con el método cruzado, los tornillos (19) de retenciòn de las ròtulas inferior .
Par de torsiòn: 163 - 202 Nm

F Serrer dans l'ordre, par le biais du mode croisè, les vis (19) de fixation des tourillons d'articulation inférieur.
Couple de serrage: 163 - 202 Nm

d

I Montare il coperchio (3).
Spalmare le viti (2) con LOCTITE 243 ed avvitarle nei fori predisposti.
Serrare ad una coppia pari a 2,5 - 3 Nm.

D Den Deckel (3) montieren.
LOCTITE 243 auf die Schraube (2) auftragen und diese im entsprechenden Bohrloch einschrauben.
Mit Anzugsmoment 2,5 - 3 Nm festziehen.

E Montar la tapa (3). Engrasar el tornillo (2) con LOCTITE 243 y atornillarlo en el orificio correspondiente.
Apretar a un par de fuerza aproximado de 2,5 - 3 Nm.

F Monter le couvercle (3).
Enduire les vis (2) de LOCTITE 243 et la visser dans le trou prévu pour cela.
Serrer avec un couple égal à 2,5 - 3 Nm.

e

I Montare il nuovo tappo superiore (1).

D Den neue Stopfen (1) montieren.

E Montar la nueva tapa superior (1).

F Monter le bouchon supérieur (1).

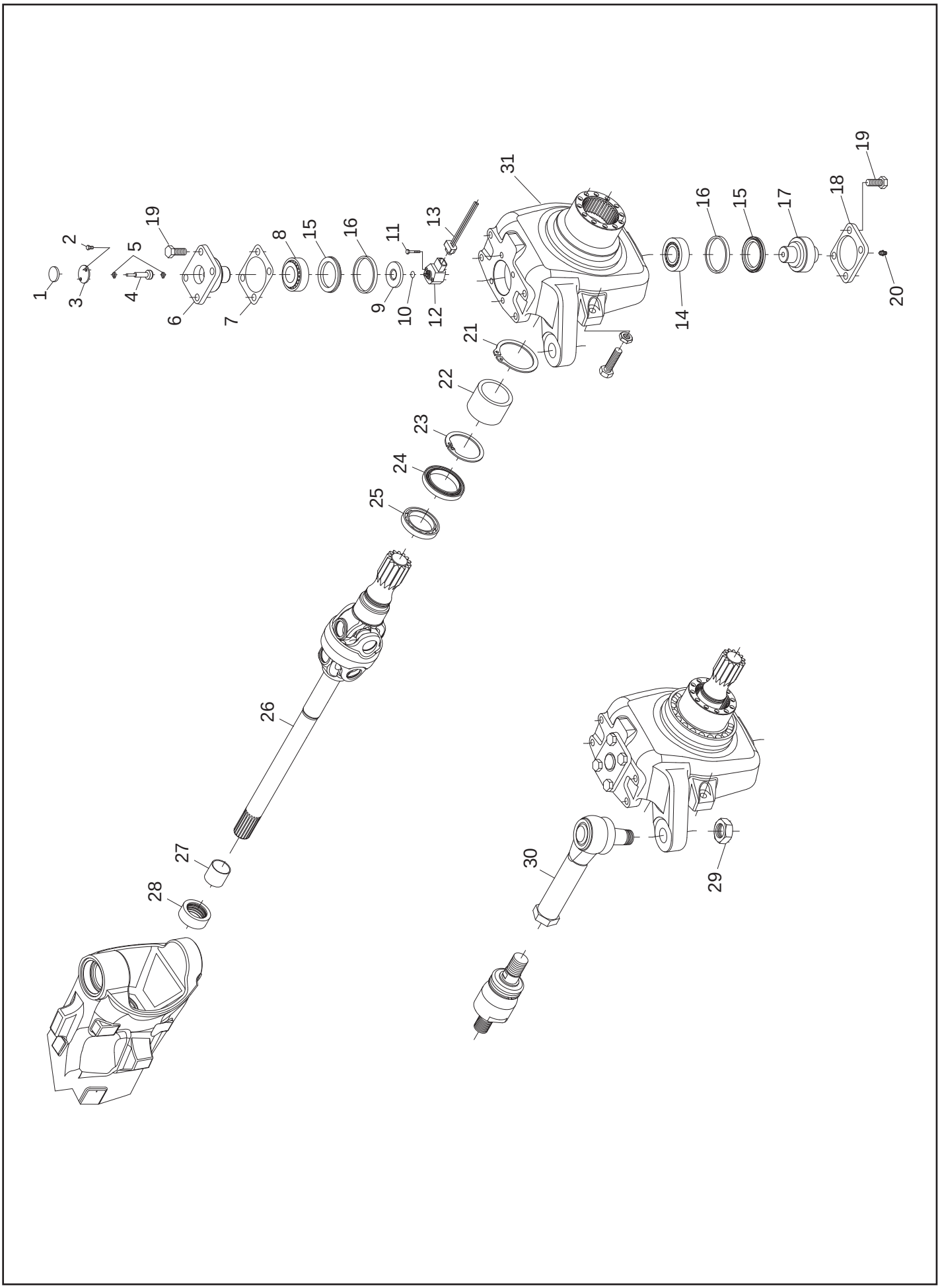
1
2
3
4
5
6
7
8
9
10
11
12
13
14
15
16
17
18
19
20
21
22
23
24
25
26
27
28
29
30
31

GB a

Remove the complete planetary carrier cover.
For details, see «HOW TO DISASSEMBLE THE PLANETARY REDUCTION».

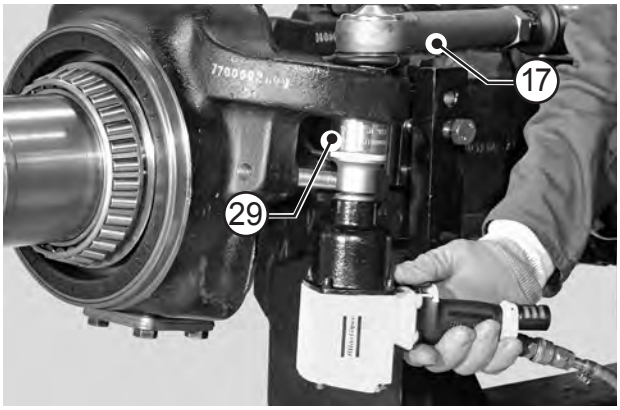

GB b

Remove the nuts (29) that lock the articulation pins (30).

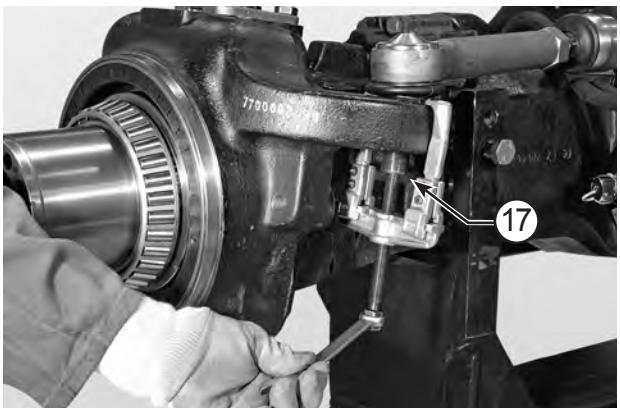

GB c

Disconnect the tapered pins of the articulation (30) from the steering case by means of a puller.

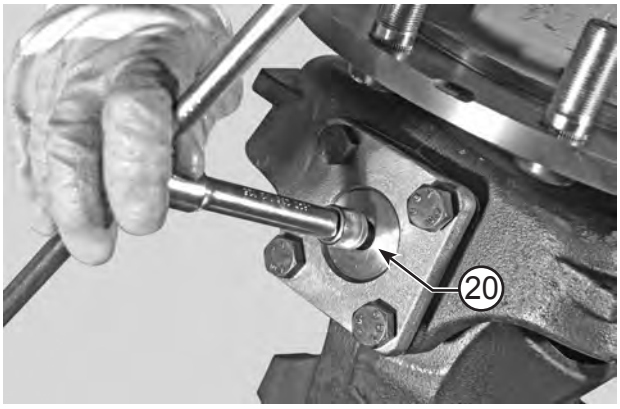

GB d

Remove the bleeding plug (20).

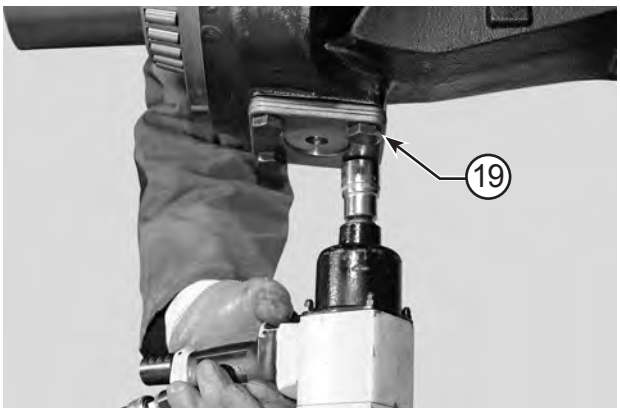

GB e

Unloose and remove the fittin screws (19) from the support articulation pin (18).

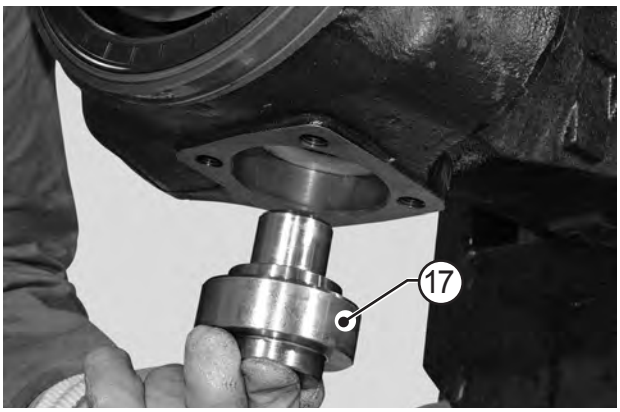

GB f

Remove the bottom articulation pin (17) .

a

I Asportare il coperchio portasatelliti completo.
Per i dettagli, vedere «SMONTAGGIO RIDUTTORE EPICICLOIDALE».

D Kompletten Planetenradhalterdeckel abnehmen.
Siehe «PLANETENGETRIEB ABMONTIEREN ».

E Sacar la tapa portasatélites completa.
Para los detalles, véase «DESMONTAJE REDUCTOR EPICICLOIDAL».

F Enlever le couvercle porte-satellites complet.
Pour de plus amples détails, voir «DESASSEMBLAGE DU REDUCTEUR EPICYCLOIDAL».

b

I Rimuovere i dadi di ritegno (29) perni snodo (30).

D Mutter (29) von den Gelenkstiften (30) abnehmen.

E Remover las tuercas (29) de retenciòn de las ròtulas (30).

F Enlever les écrous (29) de fixation des tourillons d'articulation (30).

c

I Utilizzando un estrattore, scollegare i perni conici dello snodo sterzo (30) dalla scatola snodo.

D Mit einem Abzieher, die Kegelstifte des Gelenks (30) von dem Gelenkgehàuse abnehmen.

E Utilizando un extractor, desconectar los pernos cònicos (30) de la ròtula de direcciòn del càrter de la ròtula.

F A l'aide d'un extracteur, débrancher les pivots coniques (30) d'articulation de braquage du boîtier articulation .

d

I Rimuovere tappo spurgo (20).

D Entlüfter (20) abnehmen.

E Remover (20) el tapon.

F Enlever le reniflard (20).

e

I Allentare ed asportare le viti di ritegno (19) della piastra perno snodo (18).

D Schrauben (19) des oberen Platte Gelenkstiftes (18) lockern und abschrauben.

E Aflojar y sacar los tornillos de retenciòn (19) de la placa de ròtula (18).

F Desserrer et enlever les vis de fixation (19) de support de tourillon d'articulation (18).

f

I Rimuovere il perno snodo inferiore (17).

D Unteren Gelenkstift (17) abnehmen.

E Remover la ròtula inferior (17).

F Enlever le tourillon inférieur d'articulation (17).

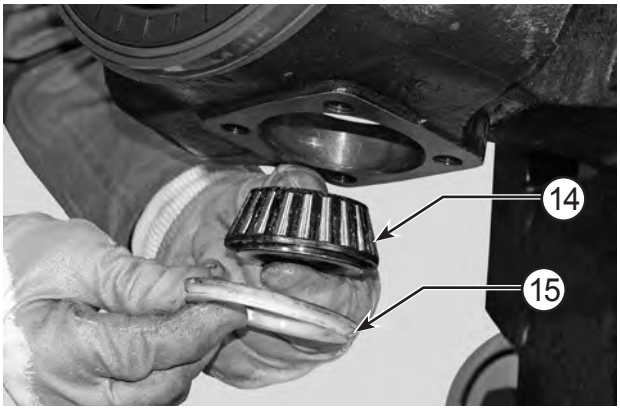

GB a

Remove the bottom front sealing ring (15) and bearing (14).

GB b

Unloose and remove the fittin screws (19) from the articulation pin (16).

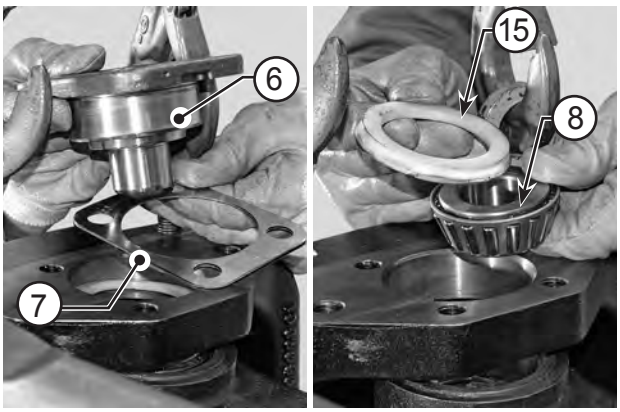

GB c

Remove the upper articulation pin (6) complete with front seal ring (15), shims (7) and bearing (8).

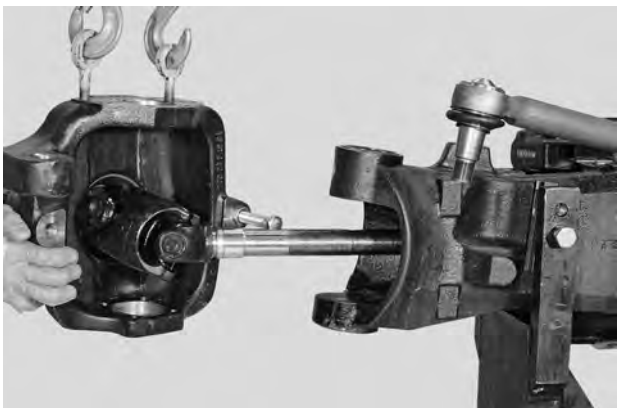

GB d

Remove the complete steering case (14).

GB e

Remove the sheet sensor (9).
Remove the screws (11) fastening the steering sensor.
Remove the steering sensor (12).
For details, see: << REPLACING THE STEERING SENSOR>>

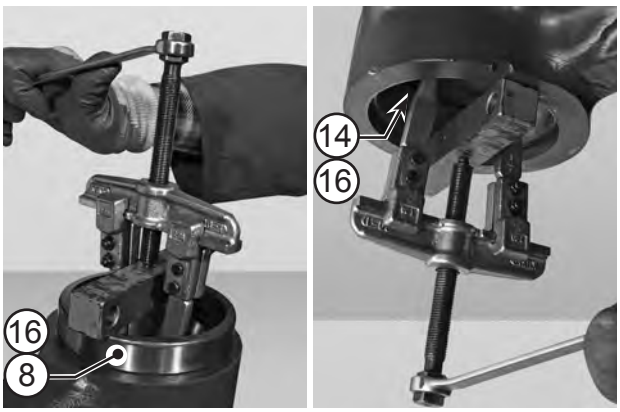

GB f

Using a puller for inner parts, remove the top thrust blocks (8) and bottom thrust block (14) complete with frictional resistance ring (16).

a

I Rimuovere l'anello di tenuta frontale inferiore (15) e cuscinetto (14).

D Unteren frontalem Kolbenring (15) und Lager (14) abnehmen.

E Remover completa de segmento de compresiòn frontal inferior (15) y cojinete (14).

F Enlever la bague d'ètanchéité frontal (15) et palier (14).

b

I Allentare ed asportare le viti di ritegno (19) del perno snodo (16).

D Schrauben (19) des oberen Gelenkstiftes (16) lockern und abschrauben.

E Aflojar y sacar los tornillos de retenciòn (19) de la ròtula (16).

F Desserrer et enlever les vis de fixation (19) du tourillon d'articulation (16).

c

I Rimuovere il perno snodo superiore (6) completo di anello di tenuta frontale (15), spessori (7) e cuscinetto (8).

D Oberen Gelenkstift (6) samt frontalen Kolbenring (15), Zwischenscheiben (7) und Lager (8) abnehmen.

E Remover el perno rótula superior (6) completo con anillo de retén frontal (15), espesores presente (7) y cojinette (8).

F Enlever le tourillon supérieur d 'articulation (6) équipé de la bague d 'étanchéité frontale (15), des cales (7) et le palier (8).

d

I Rimuovere il gruppo snodo completo (14).

D Komplettes Gelenkaggregat (14) abnehmen.

E Remover el grupo ròtula completo (14).

F Enlever le groupe d'articulation complet (14).

e

I Rimuovere la piastrina sensore (9).
Rimuovere le viti di fissaggio (11) del sensore sterzo.
Rimuovere il sensore dello sterzo (12).
Per i dettagli, vedere: << SOSTITUZIONE SENSORE STERZO>>

D Die Scheibe (9) abmontieren.
Die Befestigungsschrauben (11) des Sensors der Lenkung entfernen.
Den Sensor der Lenkung (12) entfernen.
Einzelheiten im Paragraph: << LENKSENSOR ERSETZEN>>

E Sacar la placa del sensor (9).
Retirar los tornillos de fijación (11) del sensor de dirección.
Retirar el sensor de la dirección (12).
Para los detalles, vease: << SUBSTITUTION SENSOR DE DIRECCIÓN>>

F Enlever le plaquette (9).
Enlever les vis de fixation (11) du capteur de la direction. Enlever le capteur de la direction (12).
Pour tout détail, voir: << SUBSTITUTION DU CAPTEUR DE LA DIRECTION>>

f

I Utilizzando un estrattore per interni, rimuovere la ralla del cuscinetto superiore (8) ed inferiore(14) e anello antiusura (16).

D Mit einem Abzieher, die obere und untere Lager (8) (14) und Verschleissfestigkeit Ring (16) herausnehmen.

E Utilizando un extractor, remover l'anillo antiusure (16) la rangua superior y inferior (8)(14).

F A l'aide d'un extracteur, enlever la crapaudine (8)(14) et la anneau résitant à l'usure supérieure et inférieure (16).

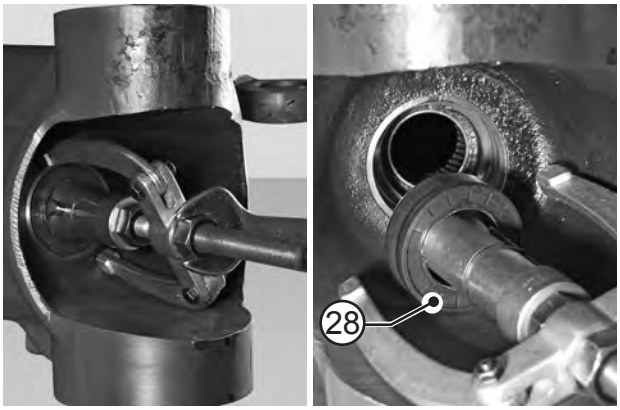

GB a

Remove the seal ring (28).
NOTE. Note down the direction of assembly of seal ring.

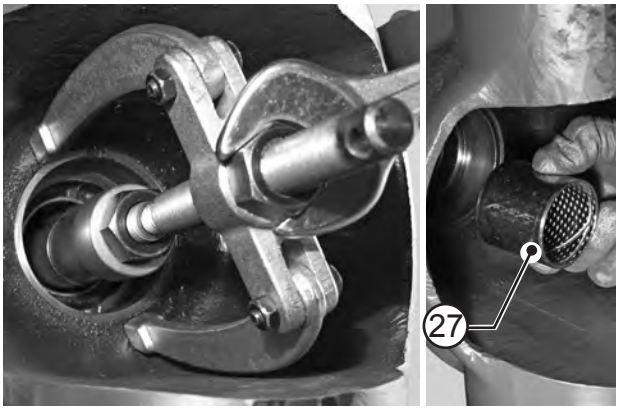

GB b

Using an extractor, remove the bushing (27).
NOTE. Note down the direction of assembly of bushing.

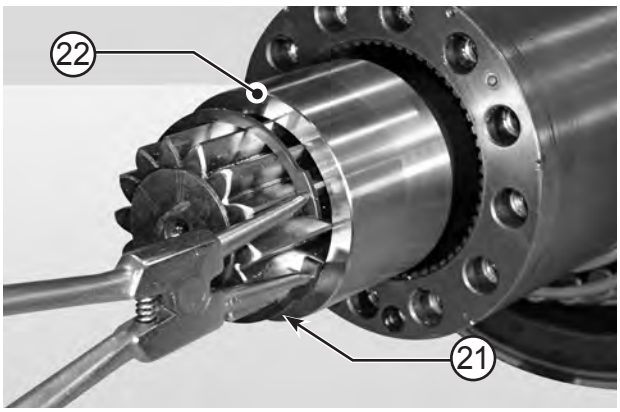

GB c

Remove snap ring (21) and the distance piece (22) from the steering case.

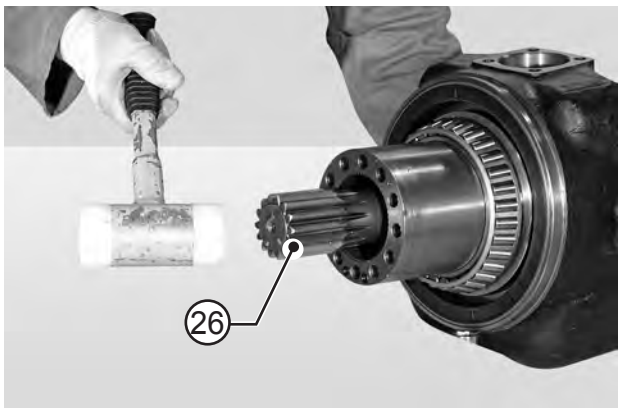

GB d

Remove the u-joint (26).

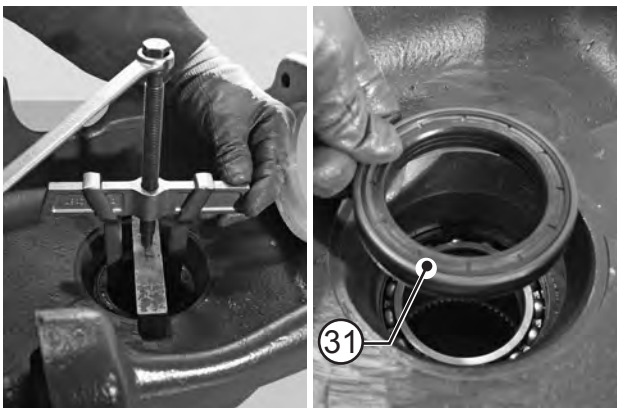

GB e

Using a puller, take off the sealing ring (24) from the steering case (31).

GB f

Remove the snap ring (7) from the steering case.
Remove the bearing (8).

a

I Rimuovere l'anello di tenuta (28).
NOTA. Annotare il senso di montaggio degli anelli di tenuta.

D Den Kolbenringes (28)abnehmen.
BEMERKUNG. Montagerichtung der Kolbenringes.

E Remover anillo de compresiòn (28).
NOTA. Anotar el sentido de montaje de los anillos de compresiòn.

F Enlever l'anneau d'étanchéitè (28).
REMARQUE. Prendre note du sens de montage des anneaux d'ètanchèitè.

b

I Utilizzando un estrattore, rimuovere la bronzina (27).
NOTA. Annotare il senso di montaggio degli anelli di tenuta.

D Mit einem Abzieher den Anlaufbuchse (27)Abnehmen.
BEMERKUNG. Montagerichtung der anlaufbuchse.

E Utilizando un extractor, remover la chumachera (27).
NOTA. Anotar el sentido de montaje de la chumachera

F A l'aide d'un extracteur enlever douille (27).
REMARQUE. Prendre note du sens de montage du douille

c

I Asportare anello elastico (21) e distanziale (22) dalla scatola snodo.

D Haltering (21) und Distanzring (22) von der gelenkgehäuse abnehmen.

E Sacar anillo elastico (21) y distancial (22).

F Enlever anneau elastique (21) et entretoise (22).

d

I Asportare il doppio giunto cardanico (26).

D Doppelgelenkwelle (26) abnehmen.

E Sacar el semi-eje (26).

F Extraire le joint de cardan double (26).

e

I Utilizzando un estrattore, asportare dalla scatola snodo (31) l'anello di tenuta (24).

D Dichtring (24) mit Hilfe eines Abziehers aus dem Lenkgehäuse (31) entfernen.

E Utilizando un extractor, quitar de la caja de la articulaciòn (31), el anillo (24).

F A l'aide un extracteur enlever du buite d'articulation (31) la bague d'étanchéité (24).

f

I Asportare l'anello elastico (7) dalla scatola snodo.

D Haltering (7) von der gelenkgehaeuse abnehmen.

E Sacar el anillo elastico (7).

F Enlever l'anneau elastique (7).

ASSEMBLY - ASSEMBLAGGIO - MONTIEREN - ENSAMBLAR - ASSEMBLER

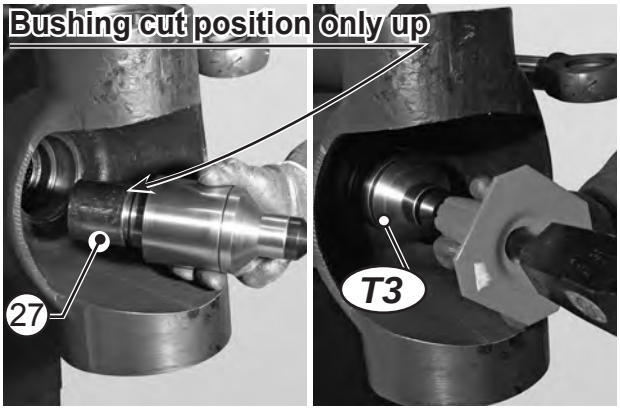

GB a

Lubricate the bushing (27) and the seat.
Install the bushing (27), using tool T3.

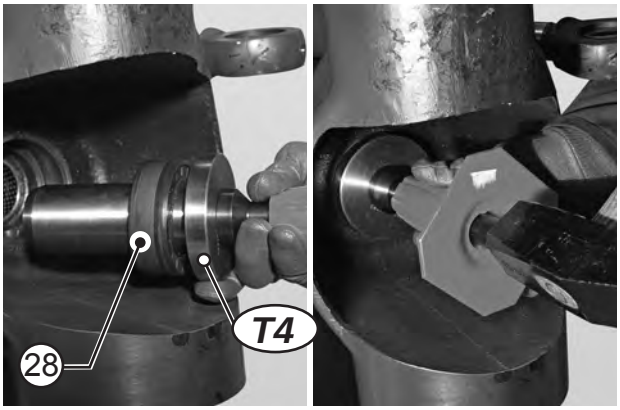

GB b

Lubricate and fit the sealing ring (28) onto tool T4; install the rings into the arm.
CAUTION! Pay particular attention to the direction of assembly of the rings..

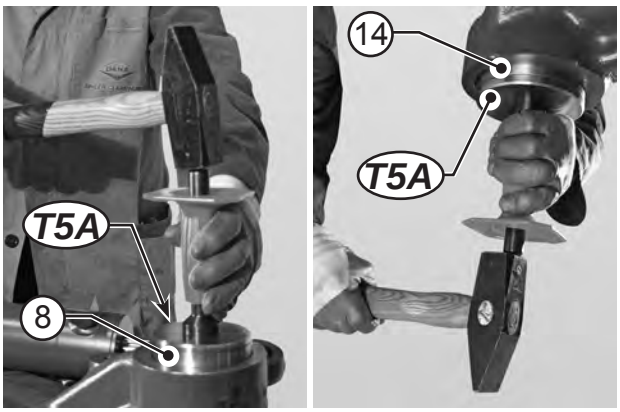

GB c

Lubricate the top thrust block (8) and bottom thrust block (14) and fit them into the fulcrum holes of the arm, using tool T5A.
NOTE: Check to be at end of stroke.

GB d

Using tool T5B install both frictional resistance rings (16).

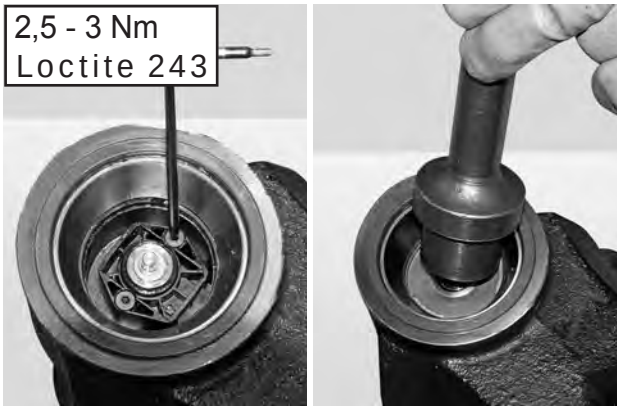

GB e

Apply Loctite 243 to the screws (11) and tighten.
Fasten the sensor (12) in position, tightening the screws (11) to 2,5 - 3 Nm.
Install the sheet (9) in the right position.
For details, see: << REPLACING THE STEERING SENSOR>>

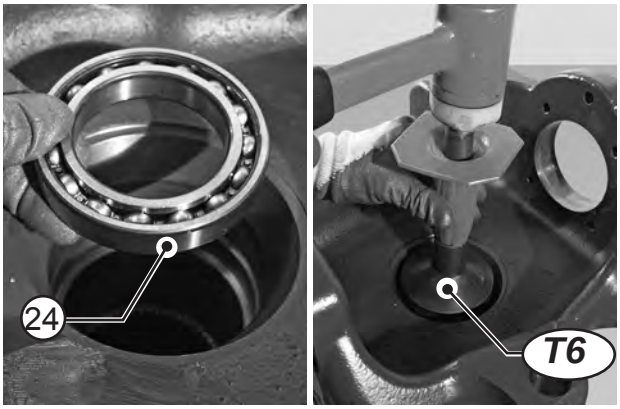

GB f

Using special tool T6 insert the bearing (24) in the steering case (31).

a

I Lubrificare la bronzina (27) e la sede.
Utilizzando l'attrezzo T3 montare la bronzina (27).

D Das Bronzelager (27) schmieren.
Mit einem Werkzeug T3 das Bronzelager (27) montieren.

E Lubricar la chumacera (27) y el alojamiento.
Montar la chumacera (27) utilizando la herramienta T3.

F Lubrifier le coussinet (27) et le logement.
A l'aide de l'outil T3 monter le coussinet (27).

b

I Lubrificare e montare sull 'attrezzo T4 l 'anello di tenuta (28);inserire gli anelli nel braccio.
ATTENZIONE! Controllare attentamente il senso di montaggio degli anelli.

D Den Dichtring (28) einfetten und auf das Werkzeug T4 montieren;die Ringe in den Arm einsetzen.
ACHTUNG! Montagerichtung der Ringe sorgfältig kontrollieren.

E Lubricar y montar sobre la herramienta T4 el anillo de retenciòn (28); montar los anillos en el eje.
ATENCION! Controlar atentamente el sentido de montaje de los anillos.

F Lubrifier et monter sur l 'outil T4 la bague (28); monter les anneaux dans le bras.
ATTENTION! Contròler attentivement le sens du montage des anneaux.

c

I Lubrificare la ralla del cuscinetto superiore (8) ed inferiore (14) e utilizzando l'attrezzo T5A montarle nei fori di fulcro del braccio.
NOTE: Assicurarsi che le ralle siano in battuta.

D Mit einem Werkzeug T5A ie die obere (8) und untere Lager (14) schmieren und in die Löcher des Arm.
HINWEIS: Darauf achten, daß sie am Anschlag anliegen.

E Lubricar la rangua superior (8) y inferior (14) y montarlos en los orificios de centro del brazo utilizando la herramienta T5A.
NOTA: Asegurarse que esten bien a fondo.

F Lubrifier la crapaudine supérieure (8) et inférieure (14), a l'aide de l'outil T5A puis monter celles-ci dans les trous du point d'appui du bras.
NOTE: s'assurer che les épaisseurs soivent en butée.

d

I Utilizzando l'attrezzo T5B installare gli anelli antiusura (16).

D Mit einem Werkzeug T5B verschleissfestigkeit Ring montieren (16).

E Utilizando la herramienta T5B instalar l'anillo antiusure (16).

F A l'aide de l'outil T5 installar la anneau résitant à l'usure (16).

e

I Spalmare le viti (11) con Loctite 243 ed avvitarle.
Fissare la posizione del sensore (12) serrando le viti (11) a 2,5 - 3 Nm. Inserire la piastrina sensore (9) nella giusta posizione.
Per i dettagli, vedere: << SOSTITUZIONE SENSORE STERZO>>

D Schrauben (11) mit Loctite 243 schmieren und im Kreuz anziehen. Den Sensor (12) mit den Schrauben (11) auf Anzugsmoment 2,5 - 3 Nm festspannen.
Die Scheibe (9) montieren.
Einzelheiten im Paragraph: << LENKSENSOR ERSETZEN>>

E Pasar sobre los tornillos (11) Loctite 243 y atornillarlos.
Fijar la posición del sensor (12) apretando los tornillos (11) a 3 Nm. Montar la piastra del sensor (9).
Para los detalles, vease: <<SUBSTITUTION SENSOR DE DIRECCIÓN>>

F Enduire les vis (11) avec du Loctite 243, et les visser en les serrant.Fixer la position du capteur (12) en serrant les vis (11) à 3 Nm. Monter le plaquette (9).
Pour tout détail, voir:<< SUBSTITUTION DU CAPTEUR DE LA DIRECTION>>

f

I Inserire nella scatola snodo (31) il cuscinetto (24) e utilizzando l'attrezzo speciale T6 montarlo in sede.

D Den Lager (24) in den Gelenkhäuse(31) montierenmit dem Werkzeug T6 in seite Position fügen.

E Introducir en el carter de rotula (31) el cojinette (24) y utilizando la herramienta T6 llevarlo al tope

F Introduire dans la boitier de direction (31) le palier (24) à l'aide de l'outil T6 monter en siege

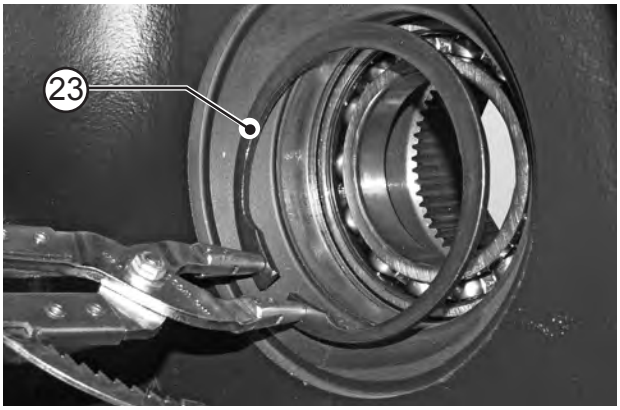

GB a

Fit the snap ring (23) of the bearing (24).
Carefully check that snap ring (23) is completely inserted

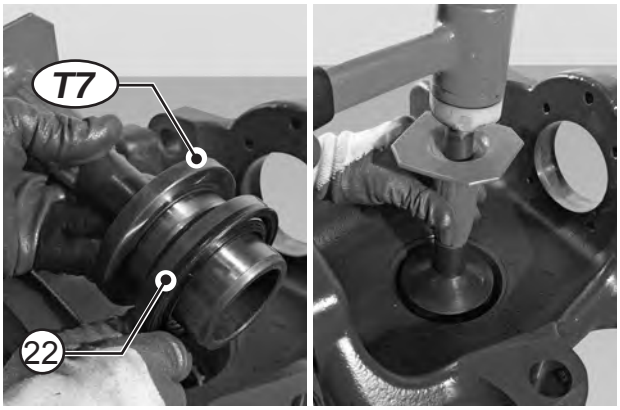

GB b

Lubricate the outer surface of the sealing ring (22) and using special tool T7 assembly it into it's position.

GB c

Lubricate the terminal of the u-joint (26) and install in the steering case (31).

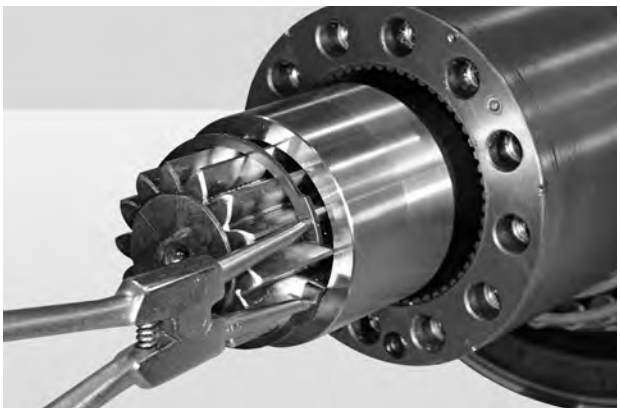

GB d

Install the distance piece (31) and snap ring (21) of the steering case.

GB e

NOTE. Apply grease to the inner lip of the seal ring.

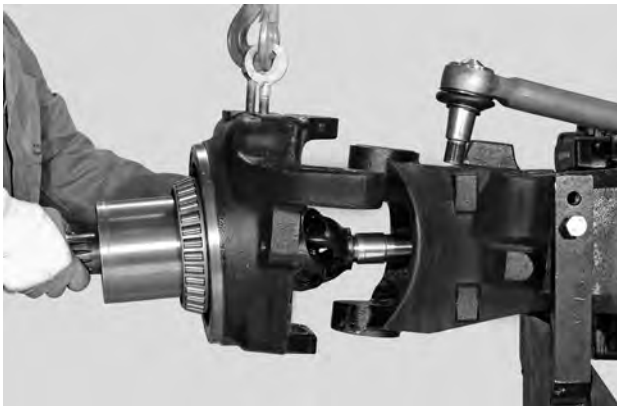

GB f

Pay attention don't damage the dust cover rings and the sealing rings.
Install the steering case.

a

I Montare l'anello elastico (23) di ritegno del cuscinetto (24).
Verificare il completo inserimento degli anelli di fermo (23).

D Haltering (23) auf das Lager (24) montieren.
Überprüfen daß die Sprengring (23) vollkommen hineingesteckt ist.

E Montar el anillo elastico (23) de retenciòn del cojinete (24).
Verifica que el anillo elástico (23) es completamente insertado.

F Monter l'anneau élastique (23) de retenue du palier (24).
Avec soin vérifie que le bague d'arrest (23) est complètement insérée.

b

I Lubrificare la superficie esterna dell'anello di tenuta (22) e utilizzando l'attrezzo speciale T7 montarlo in sede.

D Die Außenfläche des Dichtrings (22) schmieren und mit dem Werkzeug T7 in seite Position fügen.

E Lubricar la superficie externa del anillo de retenciòn (22) y utilizando la herramienta T7 llevarlo al tope.

F Lubrifier la surface exterieure de la bague d'etancheite (22) et puis à l'aide de l'outil T7 monter en siege.

c

I Lubrificare il terminale del doppio giunto cardanico (26) e montare nel gruppo scatola snodo (31).

D Das Endstück der Doppelgelenkwelle (26) schmieren und das Gelenkgehaéuse-Aggregat (31) montieren.

E Lubricar el terminal del semieje (26) y montar nel grupo caja de ròtula (31).

F Lubrifier l'extrémité de joint de cardan double (26), puis monter nel groupe du boõtier articulation (31).

d

I Montare il distanziale (21) e anello elastico (31).

D Das Distanzring (21) und Haltering (31) montieren.

E Montar el distancial (21) y el anillo elastico (31).

F Monter l'entretoise (21) et l'anneau élastique (31).

e

I **NOTA**. Lubrificare con grasso il labbro interno dell'anello di tenuta.

D **HINWEIS**: Die Innenlippe des Dichtrings mit Fett schmieren.

E **NOTA**. Lubrificar con grasa el borde interior del anillo de retención.

F **REMARQUE**: Lubrifier la lèvre interne de la bague d'étanchéité avec de la graisse.

f

I Prestare molta attenzione per non danneggiare gli anelli parapolvere e di tenuta.
Installare la scatola snodo.

D Vorsicht: Staubschutzringe und Dichtungsringe nicht beschaédigen.
Das Gelenkgehäuse-Aggregat montieren.

E Tener mucho cuidado a fin de no danàr los segmentos de protecciòn.Montar el grupo caja de ròtula.

F Faire très attention à ne pas abòmer les bagues anti-poussiére et d'étanchéitè .
Monter le groupe du boõtier articulation.

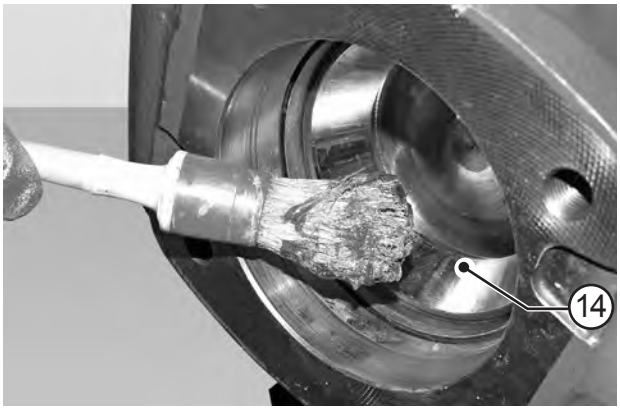

GB a

Lubricate the bearing thrust block (14).

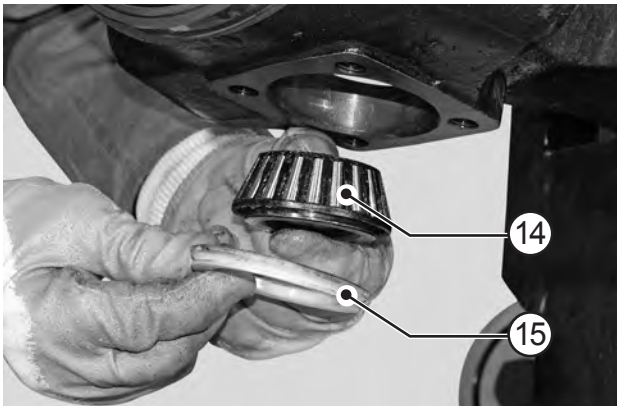

GB b

Lubricate bearing (14) and outer surface of the sealing ring (15) assemble it into it's position.
Carefully check that the rings (15) are properly oriented.

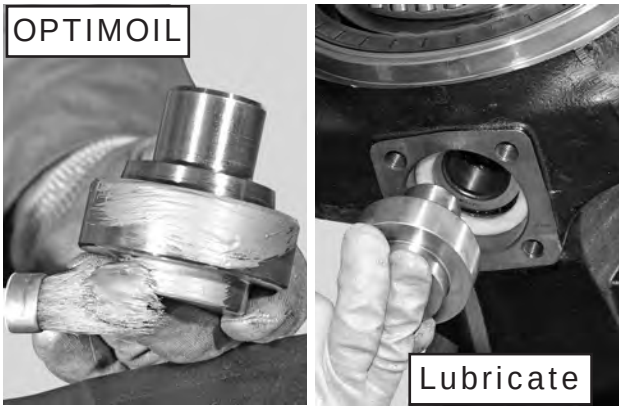

GB c

Lubricate the seats and the articulation pin (17).

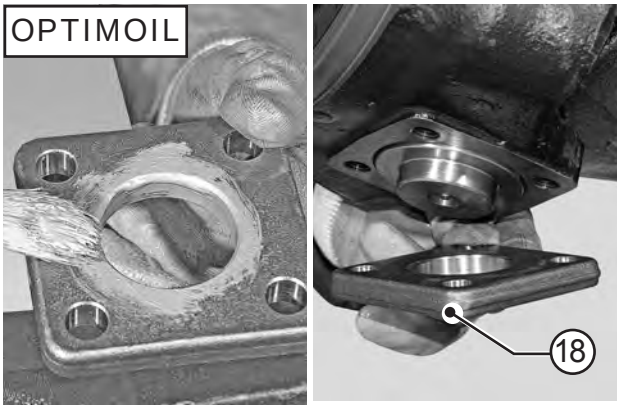

GB d

Lubricate e install the articulation pin support (18)

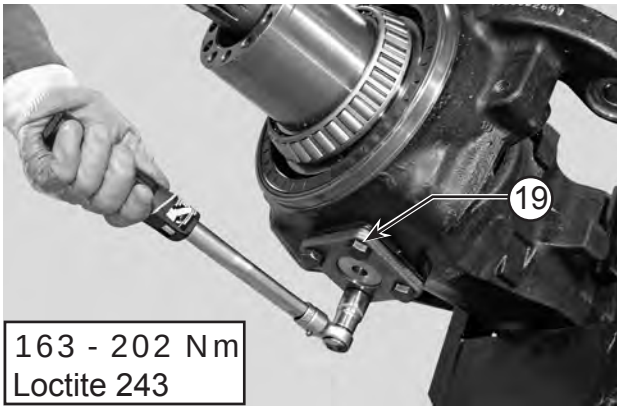

GB e

Tighten the new fittin screws (19) of bottom articulation pins in sequence using the cross tightening method.
Torque wrench setting: 163 - 202 Nm

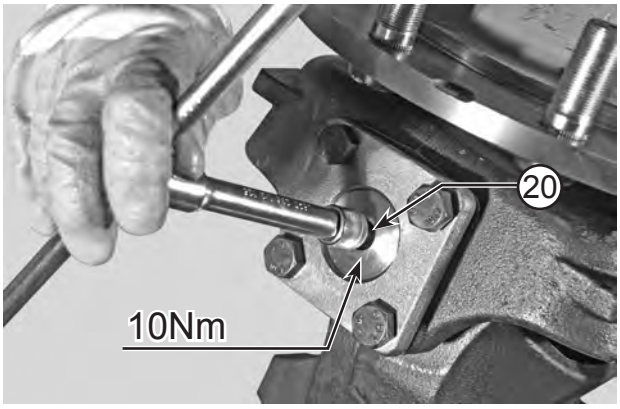

GB f

Install the grease fitting (20).
Torque wrench setting: 10 Nm

a

I Lubrificare la ralla del cuscinetto (14).

D Schmieren die Scheibe des Lager (14).

E Lubricar la rangua del cojinetes (14).

F Lubrifier a crapaudine du le palier (14).

b

I Lubrificare il cuscinetto (14) la superficie esterna dell'anello di tenuta (15) e montarli in sede. Controllare attentamente l'orientamento degli anelli (15).

D Das Lager (14) und die Außenfläche des Dichtrings (15) schmieren in seite Position fügen. Richtung der Ring (15) sorgfältig kontrollieren.

E Lubricar el cojinette (14), la superficie externa del anillo de retenciòn (15) y llevarlo al tope. Controlar atentamente la orientaciòn de los anillos (15).

F Lubrifier le palier (14) la surface exterieure de la bague d'etancheite (15) et monter en siege. Faire trés attention au sens des bagues (15).

c

I Lubrificare sede e perno snodo (17).

D Das Richting sitzt und das Bolzen (17) schmieren.

E Lubricar el alojamiento y el perno de fulcro (17).

F Lubrifier le logement et le boîtier de articulation (17).

d

I Lubrificare e installare la piastra supporto (18) del perno snodo.

D Des oberen Platte Gelenkstiftes (18) schmieren un montieren.

E Lubricar y montar la placa de ròtula (18).

F Lubrifier et monter le support de tourillon d'articulation (18).

e

I Serrare in sequenza con il metodo incrociato, le nuove viti (19) di ritegno dei perni snodo inferiore. Coppia di serraggio: 163 - 202 Nm

D Entgegengesetzt und abwechselnd die Schrauben (19) der unteren Gelenkstiften festschrauben. Anzugsmoment: 163 - 202 Nm

E Apretar en secuencia con el método cruzado, los tornillos (19) de retenciòn de las ròtulas inferior . Par de torsiòn: 163 - 202 Nm

F Serrer dans l'ordre, par le biais du mode croisè , les vis (19) de fixation des tourillons d'articulation inférieur. Couple de serrage: 163 - 202 Nm

f

I Installare l'ingrassatore (20). Coppia di serraggio: 10 Nm

D Den Schmiernippel (20) montieren. Anzugsmoment: 10 Nm

E Montar l'rgrasador (20). Par de torsiòn: 10 Nm

F Monter le graisseur (20). Couple de serrage: 10 Nm

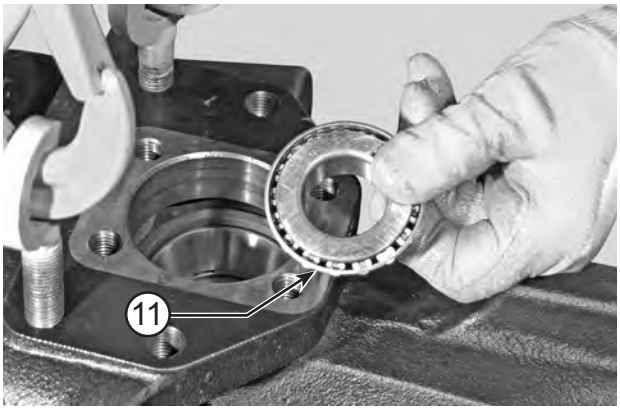

GB a

Install the bearing (11).

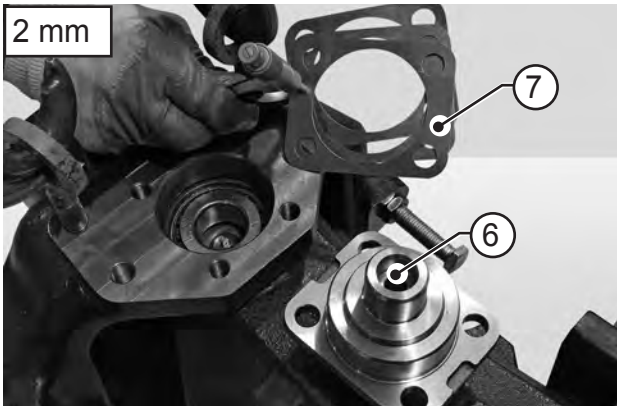

GB b

Prepare a series of shims (7) of 2 mm. to be assembled above the upper pin (6).

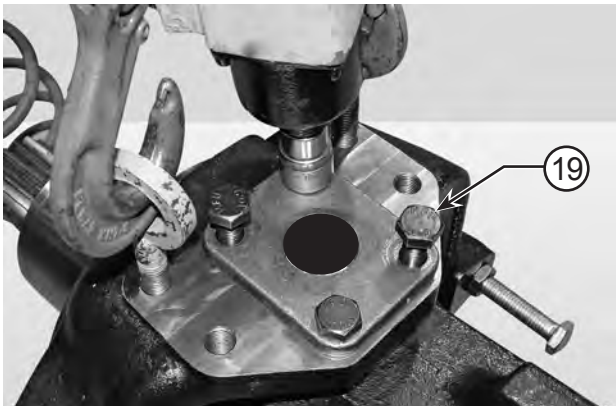

GB c

Tighten the new fittin screws (19) of top articulation pins in sequence using the cross tightening method.

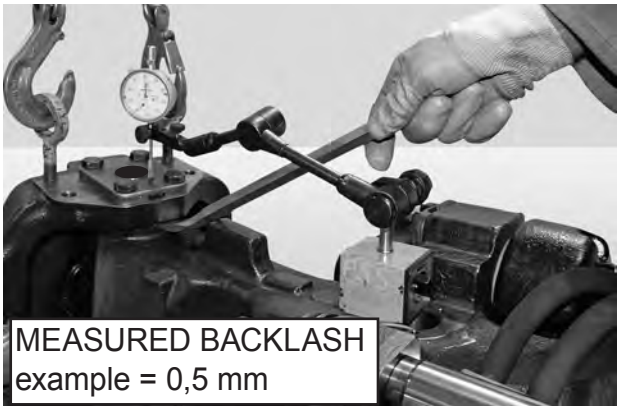

GB d

Check by means of a lever the vertical gap.

King pin Preload Drw = 0,5 - 0,8 mm
First step Shim = 2 mm
Measured Backlash = 0,5 mm
S = First step shim - Measured Backlash - Preload Drw =
EXAMPLE
S = 2 mm - 0,5 mm - 0,5 mm = 1,0 mm
S = 1,0 mm

GB e

Calculate the difference between sizes **"First step shim", "Measured Backlash"** and **"Preload Drw"** so as to obtain the size "S" of the shim (7) that will go under the king pin.

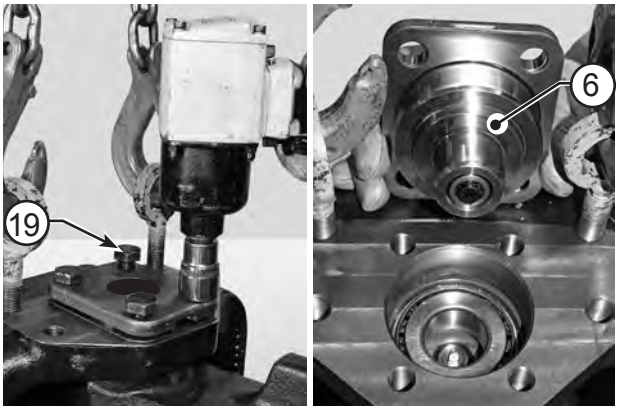

GB f

Unloose and remove the fittin screws (19) and the articulation pin (6) .

a

I Installare il cuscinetto (11).

D Den Lager (11) montieren.

E Montar el cojinetes (11).

F Monter le palier (11).

b

I Preparare una serie di spessori da 2 mm (7) da montare sopra il perno superiore (6).

D Eine Reihe von Überlegscheiben von 2 mm (7) zur Montage unter den oberen Bolzen (6) vorbereiten.

E Preparar una serie de espesores (7) de 2 mm para poner sobre el perno superior (6).

F Preparer un jeu de cales (7) 2 mm puor les monter sûr le tourillon superieur (6).

c

I Serrare in sequenza con il metodo incrociato, le nuoveviti (19) di ritegno del perno snodo superiore.

D Entgegengesetzt und abwechselnd die Schrauben (19) der oberen Gelenkstiften festschrauben.

E Apretar en secuencia con el método cruzado, los tornillos (19) de retenciòn de las ròtulas superior.

F Serrer dans l'ordre, par le biais du mode croisè , les vis (19) de fixation des tourillons d'articulation supérieur.

d

I Montare un comparatore centesimale e on l'aiuto di una leva verificare il gioco.

D Die hundertteilige Meßuhr montieren; mit Hilfe eines Hebels auf vertikale Spielfreiheit überprüfen.

E Montar un comparador centesimal y haciendo palanca, verificar el juego vertical.

F Monter un comparateur centésimal A l'aide d'un levier verifier le jeu vertical.

e

I Eseguire la differenza tra le misure **"First step shim", "Measured Backlash"** e **Preload Drw** per stabilire la misura "S" dello spessore (7) da inserire.

D Den Unterschied zwischen Maß **"First step shim", "Measured Backlash"** und **"Preload Drw"** ausrechnen, um das Distanzstück "S" (7) auszurechnen, das unter die Scheibe eingesetzt werden soll.

E Sacar la diferencia entre las medidas **"First step shim", "Measured Backlash"** y **"Preload Drw"** para establecer la medida "S" del espesor (7) a insertar.

F Effectuer la différence entre les mesures **"First step shim", "Measured Backlash"** et **"Preload Drw"** pour établir la mesure "S" de la cale (7) à introduire.

f

I Allentare ed asportare le viti di ritegno (19) e il perno snodo (6).

D Schrauben (19) und oberen Gelenkstiftes (6) lockern und abschrauben.

E Aflojar y sacar los tornillos de retenciòn (19) y la ròtula (6).

F Desserrer et enlever les vis de fixation (19) du tourillon et articulation (6).

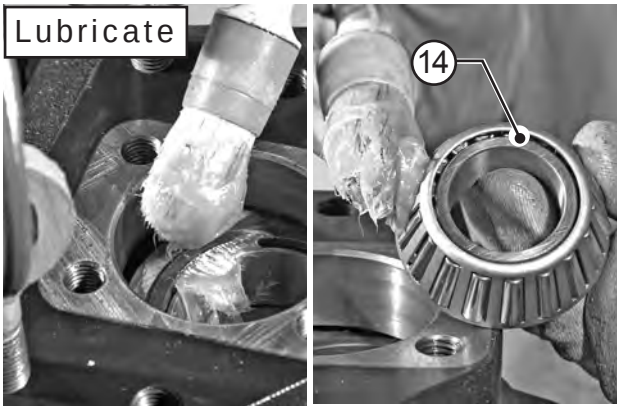

GB a

Lubricate the bearing thrust block (14) and bearing (14).

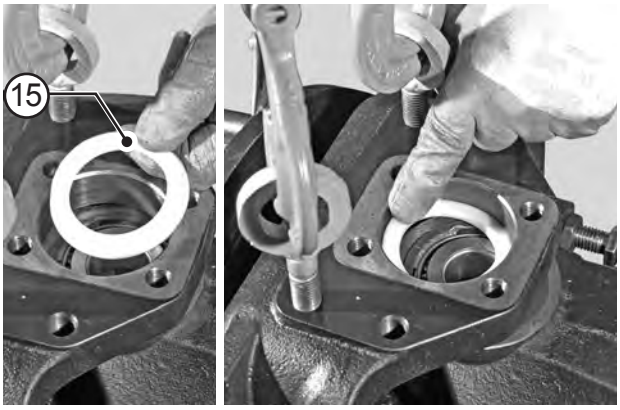

GB b

Fit the front sealing ring (15) into the steering case.
Carefully check that the rings (15) are properly oriented.

GB c

Lubricate the articulation pin (6).

GB d

Fit the unit (13) in the steering case (24).
Position the screws (12) and tightly tighten.

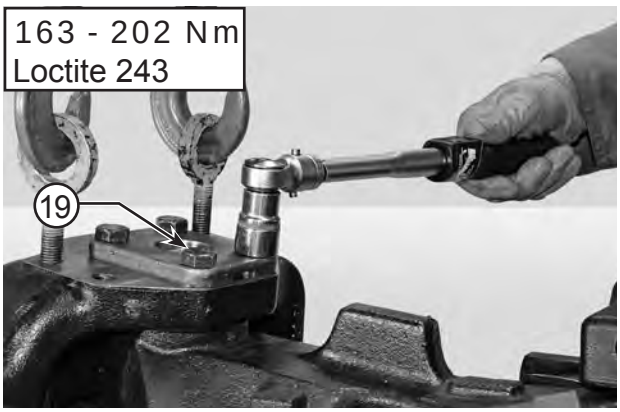

GB e

Tighten the new fittin screws (19) of bottom articulation pins in sequence using the cross tightening method.
Torque wrench setting: 163 - 202 Nm

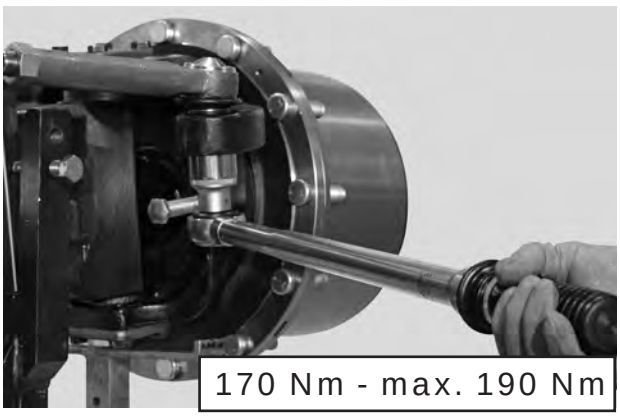

GB f

Insert the pins in the steering case (38) and lock into position using a torque wrench setting of 170 - 190 Nm.
CAUTION! Check that rubber guards are intact.

a

I Lubrificare la ralla del cuscinetto (14) e cuscinetto (14).

D Schmieren die Scheibe und Lager (14).

E Lubricar la rangua del cojinetes (14) y cojinette (14).

F Lubrifier a crapaudine du le palier (14) et le palier (14).

b

I Montare nella scatola snodo l' anello di tenuta frontale (15). Controllare attentamente l'orientamento degli anelli (15).

D In den Gelenkhäuse die frontalen Dichtringe (15) montieren. Richtung der Ring (15) sorgfältig kontrollieren.

E Montar en las ròtula de direccion el segmento de compresiòn frontal (15). Controlar atentamente la orientaciòn de los anillos (15).

F Monter les boitier de direction les bagues d'ètanchéité frontal (15). Faire trés attention au sens des bagues (15).

c

I Lubrificare il perno snodo (6).

D Schmieren das Bolzen (6).

E Lubricar el perno de fulcro (6).

F Lubrifier le bõitier articulation (6).

d

I Montare il gruppo (13) nella scatola snodo (24). Montare le viti (12) e serrarle leggermente.

D Schmieren und das Aggregat (13) in das Gelenkgehaéuse (24) montieren.

E Lubricar y montar el grupo (13) en la ròtula (24). Die Schrauben (12) anbringen und leicht zuschrauben.

F Lubrifier et monter le groupe (13) dans boõtier articulation (24).
Montar los tornillos (12) y apretarlos ligeramente.

e

I Serrare in sequenza con il metodo incrociato, le nuove viti (19) di ritegno dei perni snodo inferiore.
Coppia di serraggio: 163 - 202 Nm

D Entgegengesetzt und abwechselnd die Schrauben (19) der unteren Gelenkstiften festschrauben.
Anzugsmoment: 163 - 202 Nm

E Apretar en secuencia con el método cruzado, los tornillos (19) de retenciòn de las ròtulas inferior .
Par de torsiòn: 163 - 202 Nm

F Serrer dans l'ordre, par le biais du mode croisè , les vis (19) de fixation des tourillons d'articulation inférieur.
Couple de serrage: 163 - 202 Nm

f

I Inserire nella scatola snodo (38) i perni e bloccare la posizione serrandoli con una coppia di 170 - 190 Nm.

ATTENZIONE! Controllare l'integrità delle protezioni in gomma.

D In das Gelenkgehäuse (38) die Stifte einsetzen und mit einem Anzugsmoment von 170 - 190 Nm festschrauben.**ACHTUNG!** Kontrollieren ob die Gummiringe (A) in Ordnung sind.

E Introducir en el cárter de la rótula (38) los pernos y bloquear la posición apretándolos con un par de 170 - 190 Nm.
CUIDADO! Controlar la integridad de las protecciones de goma.

F Introduire dans le boîtier articulation (38) les tourillons, puis bloquer dans la position en serrant ceux-ci à un couple de 170 - 190 Nm.
ATTENTION! Contrôler le bon état des protections en caoutchouc.

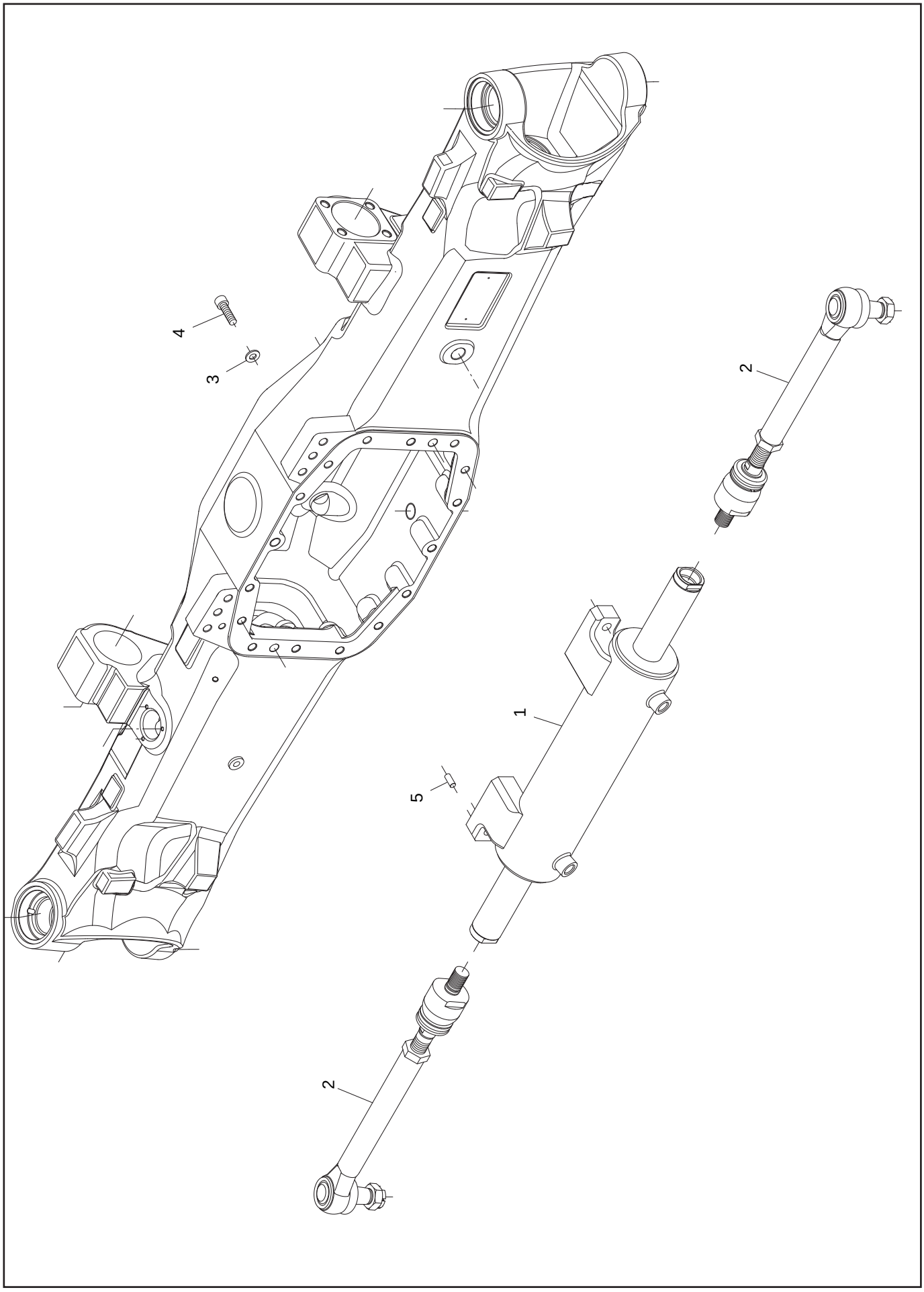
4
3
2
1
5
2

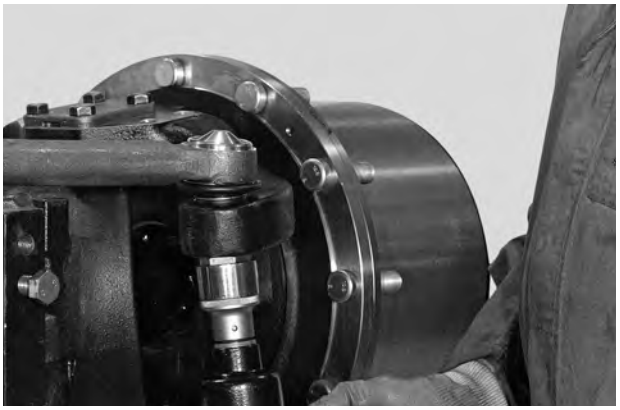

GB a

Remove the nuts that lock the articulation pins.

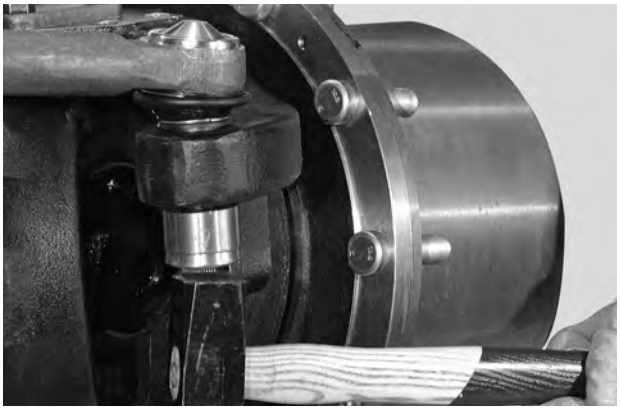

GB b

Disconnect the tapered pins of the articulation from the steering case by means of a puller.

GB c

Disconnect steering bars from the piston.

GB d

Remove the securing screws from the steering cylinder.

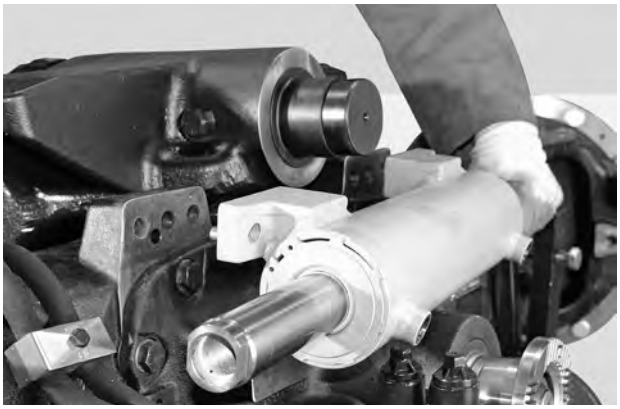

GB e

Extract the cylinder (1) using a plastic hammer.

GB f

ATTENTION! Before attempting to disassemble the unit, drain the oil in the cylinder chambers completely.
Remove the snap ring of the cylinder head.

a

I Rimuovere i dadi di ritegno perni snodo.

D Mutter von den Gelenkstiften abnehmen.

E Remover las tuercas de retenciòn de las ròtulas.

F Enlever les écrous de fixation des tourillons d'articulation.

b

I Utilizzando un estrattore, scollegare i perni conici dello snodo sterzo dalla scatola snodo.

D Mit einem Abzieher, die Kegelstifte des Gelenks von dem Gelenkgehàuse abnehmen.

E Utilizando un extractor, desconectar los pernos còonicos de la ròtula de direcciòn del càrter de la ròtula.

F A l'aide d'un extracteur, débrancher les pivots coniques d'articulation de braquage du boîtier articulation .

c

I Scollegare dal pistone le barre di sterzatura.

D Vom Kolben die Lenkstange abnehmen.

E Desconectar del pistòn las barras de direcciòn.

F Désassembler du piston les barres de braquage.

d

I Asportare le viti di fissaggio del cilindro di sterzatura.

D Die Befestigungsschrauben des Lenkzylinders abnehmen.

E Sacar los tornillos que fijan el cilindro de direcciòn .

F Enlever les vis de fixation du cylindre de braquage .

e

I Estrarre il cilindro (1) utilizzando un mazzuolo in materiale plastico.

D Den Zylinder (1) mit einem Gummihammer herausschlagen.

E Extraer el cilindro (1) utilizando un martillo de material plàstico.

F Extraire le cylindre (1) à l'aide d'un maillet en matiére plastique.

f

I ATTENZIONE! Prima dello smontaggio, scaricare completamente l'olio contenuto nelle camere del cilindro.
Rimuovere l'anello elastico di ritegno della testata.

D ACHTUNG! Bevor dieser abmontiert wird, das Úl aus den Zylinderkammern ganz ablassen.
Den Haltering des Kopfes abnehmen.

E ATENCION! Antes del desmontaje, descargar completamente el aceite contenido en las camaras del cilindro.
Remover el anillo elastico de retenciòn del cabezal .

F ATTENTION! Avant le démontage, laisser couler complètement l'huile contenue dans les chemises du cylindre.
Retirer la bague élastique de retenue de la culasse.

GB a

Lightly tap the cylinder head with a plastic hammer so as to push it inside the cylinder (1).
NOTE. Insert the cylinder head so it is flush with the cylinder.

GB b

Using a punch, force the stop ring located inside the cylinder (1) and extract ring using a screwdriver.

GB c

Hammer the piston on the rear of the head using a plastic hammer.
Continue hammering until the head is ejected from the cylinder.

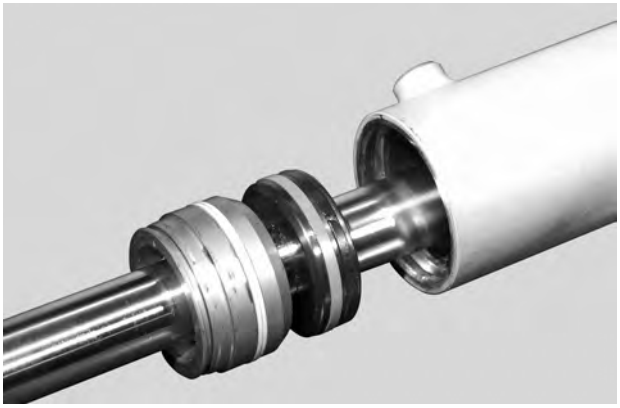

GB d

Remove all seals, anti-extrusion rings and scraper rings from head , cylinder and piston .
NOTE. 1 - All seals must be replaced every time the unit is disassembled. 2 - Particular attention must be paid not to damagethe seats of both seals and piston slide.

a

I Con leggeri colpi di un mazzuolo in materiale plastico, spingere la testata verso l'interno del cilindro (1).
NOTA. Inserire la testata fino a filo del cilindro.

D Mit leichten Schlägen eines Gummihammers, den Kopf in das Innere des Zylinders (1) drücken.
BEMERKUNG. Den Kopf bis zum Rande des Zylinders einsetzen.

E Con ligeros golpes de martillo plastico, empujar el cabezal hacia el interno del cilindro (1).
NOTA. Introducir el cabezal hasta el filo del cilindro.

F En donnant des coups légers avec un maillet en matière plastique, pousser la culasse vers l'intérieur du cylindre (1).
NOTE. Introduire la culasse jusqu'au ras du cylindre.

b

I Utilizzando un punteruolo, forzare l'anello di arresto interno al cilindro (1) ed estrarlo utilizzando un cacciavite.

D Mit einem Senkstift den Sperring im Inneren des Zylinders (1) forcieren und mit einem Schraubenzieher heraus nehmen.

E Utilizando un punzon, forzar el anillo de paro interno al cilindro (1) y sacarlo utilizando un destornillador.

F A l'aide d'une pointe, forcer la bague de retenue à l'intérieur du cylindre (1) et l'arracher en utilisant un tournevis.

c

I Con un mazzuolo in materiale plastico, mandare in battuta il pistone a ridosso della testata .
Proseguire fino all'espulsione della testata dal cilindro.

D Mit einem Gummihammer den Kolben bis zum Anschlag des Kopfes bringen.
Weiter schlagen, bis der Kopf aus dem Zylindergeschlagen worden ist.

E Con un martillo de material plàstico, mandar a tope el pistòn detràs de la culata .
Continuar hasta la expulsiòn de la culata del cilindro.

F A l'aide d'un maillet en matiére plastique, envoyer en butée le piston à l'abri de la culasse .
Continuer jusqu'à l'éjection de la culasse hors du cylindre.

d

I Rimuovere dalla testata , dal cilindro e dal pistone tutte le guarnizioni, gli anelli antiestrusione e gli anelli raschiatori.
NOTA. 1 - Tutte le tenute devono essere sostituite ad ogni smontaggio. 2 - Prestare molta attenzione per non rovinare le sedidelle guarnizioni e dello scorrimento del pistone.

D Vom Kopf , vom Zylinder und vom Kolben alle Dichtungen, Halteringe und Abschaber wegnehmen.
BEMERKUNG. 1 - Alle Dichtungen müssen jedesmal gewechselt werden, wenn der Zylinder zerlegt wird. 2 - Sehr vorsichtig vorgehen, um die Dichtungs- und Kolbensitze nicht zu beschädigen.

E Remover de la culata del cilindro y del pistón todas las juntas, los anillos antiextrusión y los anillos raspadores.
NOTA. 1 - Todas las estanqueidades tienen que ser sustituidas a cada desmontaje. 2 - Tener mucho cuidado a fin de no dañar los alojamientos de las juntas y del deslizamiento del pistón.

F Enlever de la culasse , du cylindre et du piston , toutes les garnitures, anneaux anti-extrusion et les anneaux racleurs.
NOTE. 1 - Toutes les étanchéités doivent étre remplacées à chaque démontage.
2 - Faire trés attention á ne pas abímer les logements des garnitures et de coulissement du piston.

ASSEMBLY - ASSEMBLAGGIO - MONTIEREN - ENSAMBLAR - ASSEMBLER

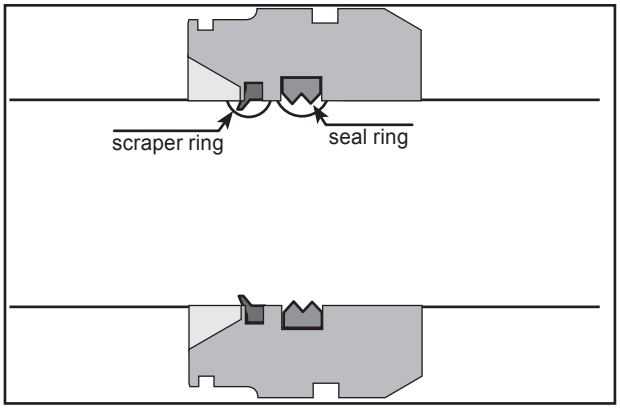

GB a

After applying grease, install the sealing ring of the shaft and the scraper ring in the head.
CAUTION! Thoroughly check that positioning of the anti-extrusion ring is correct.

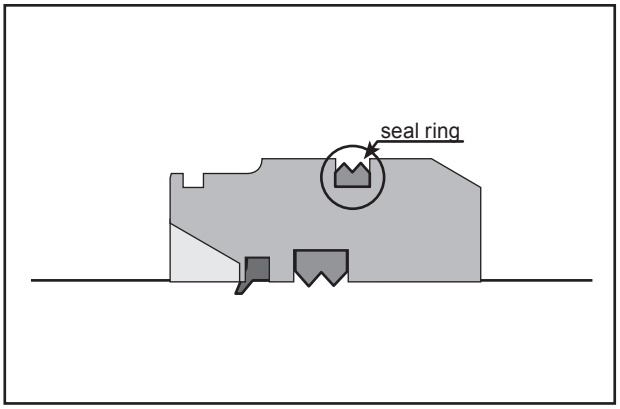

GB b

Fit the seal onto the outside of the head.
CAUTION!
1 - In order to facilitate assembly, apply grease to the outer surface of the piston.
2 - Do not roll the seal up.

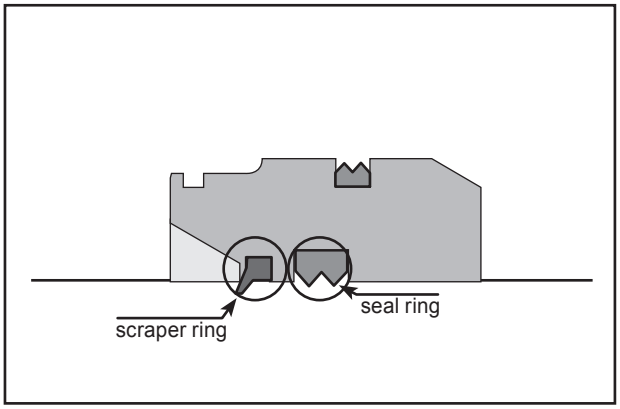

GB c

After applying grease, install the sealing ring of the shaft and the scraper ring in the head.

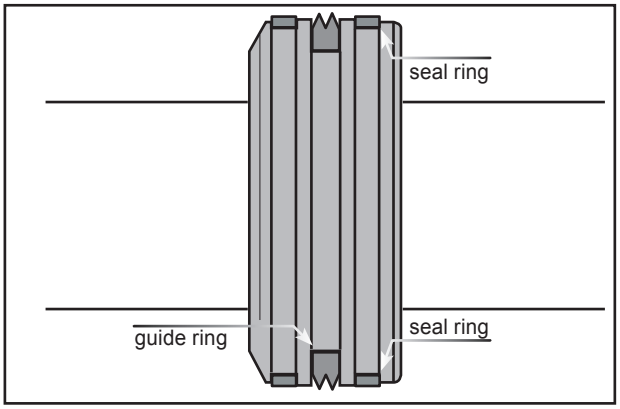

GB d

Prepare the piston by fitting it with the guide ring and the seal.
CAUTION!
1 - In order to facilitate assembly, apply grease.

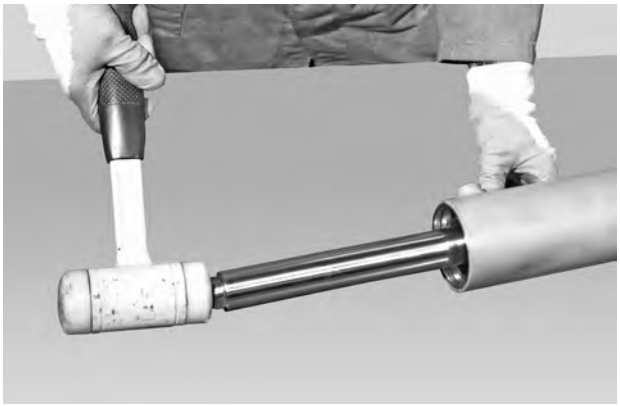

GB e

Push the piston into the cylinder.

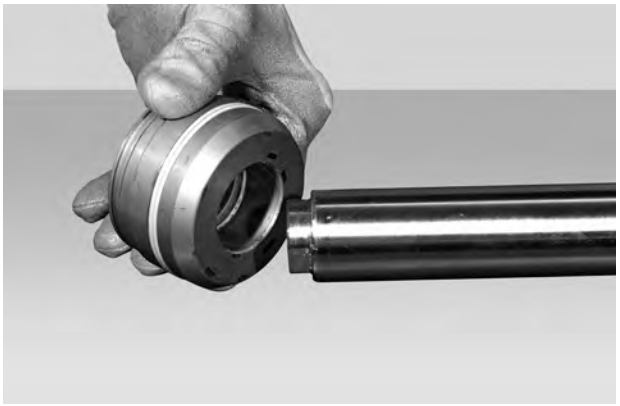

GB f

Lightly tap the cylinder head with a plastic hammer so as to push it inside the cylinder

a

I Lubrificare con grasso ed installare nel cilindro l'anello di tenuta dello stelo e l'anello raschiatore.
ATTENZIONE! Controllare attentamente il posizionamento dell'anello antiestrusione.

D Mit Fett die Dichtung des Schaftes und den Abschaber schmieren in den Zylinder montieren.
ACHTUNG! Sorgfältig die Position des Halterings kontrollieren.

E Lubricar con grasa e instalar en el cilindro el segmento de compresiòn del vàstago y el anillo raspador.
CUIDADO! Controlar atentamente el posicionamiento del anillo antiextrusiòn.

F Lubrifier avec du gras et installer dans le cylindre la bague d'étancheitè de la tige et l'anneau racleur.
ATTENTION! Contròler attentivement le positionnement de l'anneau anti-extrusion.

b

I Montare all'esterno della testata la guarnizione.
ATTENZIONE!
1 - Per facilitare il montaggio, lubrificare con grasso la superficie esterna del pistone.
2 - Non arrotolare la guarnizione.

D Außen am Kopf die Dichtung montieren.
ACHTUNG!
1 - Um die Montage zu erleichtern, die aÈußere KolbenflaÈche mit Fett schmieren.
2 - Die Dichtung nicht wickeln.

E Montar fuera de la culata la junta.
CUIDADO!
1 - Para facilitar el montaje, lubricar con grasa la superficie exterior del pistòn.
2 - No enrollar la junta.

F Monter à l'extérieur de la culasse la garniture.
ATTENTION!
1 - Pour rendre plus aisé le montage, lubrifier avec du gras la surface externe du piston.
2 - Ne pas enrouler les garnitures.

c

I Lubrificare con grasso ed installare nella testata l'anello di tenuta dello stelo e l'anello raschiatore.

D Mit Fett die Dichtung des Schaftes den Abschaber schmieren und in den Kopf montieren.

E Lubricar con grasa e instalar en la culata el segmento de compresión y el anillo raspador.

F Lubrifier avec du gras et installer dans le cylindre la bague d'étanchéité de la tige et l'anneau racleur.

d

I Preparare il pistone montando l'anello di guida e la guarnizione.
ATTENZIONE! 1 - Per facilitare il montaggio, lubrificare con grasso.

D Den Kolben mit dem Führungsring und der Dichtung vorbereiten.
ACHTUNG! 1 - Um die Montage zu erleichtern, mit Fett schmieren.

E Preparar el pistòn montando el anillo de guõa y la junta.
CUIDADO! 1 - Para facilitar el montaje, lubricar con grasa.

F Préparer le piston en montant l'anneau de guidage et la garniture.
ATTENTION! 1 - Pour rendre plus aiséle montage, lubrifier avec du gras.

e

I Inserire il pistone nel cilindro.

D Den Kolben in den Zylinder lang schlagen.

E Introducir el pistòn en el cilindro.

F Introduire le piston d'environ dans le cylindre.

f

I Con leggeri colpi di un mazzuolo in materiale plastico, spingere la testata verso l'interno del cilindro.

D Mit leichten Schlägen eines Gummihammers, den Kopf in das Innere des Zylinders drücken.

E Con ligeros golpes de martillo plastico, empujar el cabezal hacia el interno del cilindro

F En donnant des coups légers avec un maillet en matière plastique, pousser la culasse vers l'intérieur du cylindre.

GB a

Apply grease to head seals, fit the head onto the piston and push it into the cylinder using a plastic hammer.
NOTE. Insert the head as to line it up with the edge of the cylinder.

GB b

Introduce the stop ring and ensure that it sets in the seat of cylinder .

GB c

Force the head until it is seated against the stop ring .

GB d

Fit the snap ring on the head .
CAUTION! Make sure that the snap ring is securely fastened in its seat.
If necessary, force it into its seat using a drift and a hammer.

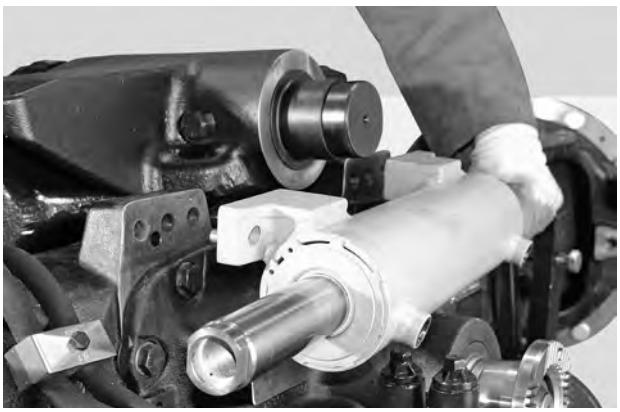

GB e

Fit the steering cylinder into its seat.

GB f

Lock the cylinder by cross- tightening the screws .
Torque wrench setting: 300 - 310 Nm

a

I Lubrificare con grasso le guarnizioni della testata , infilarla sul pistone e, con un mazzuolo in materiale plastico, inserirla nel cilindro.
NOTA. Inserire la testata fino a filo del cilindro.

D Die Dichtungen des Kopfes mit Fett schmieren. Den Kopf auf den Kolben schieben und mit einem Gummihammer in den Zylinder schlagen.
BEMERKUNG. Den Kopf bis zum Zylinderrand hinein schlagen.

E Lubricar con grasa las juntas de la culata, introducirla en el pistòn y, utilizando un martillo de material plastico, introducirla en el cilindro.
NOTA. Introducir la culata hasta nivel del cilindro.

F Lubrifier avec du gras les garnitures de la culasse. Enfiler celle-ci sur le piston, et à l'aide d'un maillet en matière plastique, introduire dans le cylindre.
NOTE. Introduire la culasse jusqu'au bord du cylindre.

b

I Inserire l'anello di arresto assicurandosi che si assesti nella sede del cilindro .

D Den Sperring einsetzen und kontrollieren, ob er im Sitz des Zylinders richtig sitzt.

E Introducir el anillo de paro asegurandose que se coloque en la sed del cilindro .

F Introduire la bague de retenue et s'assurant qu'elle s'arrête dans le siège du cylindre .

c

I Forzare la testata fino alla battuta sull'anello di arresto .

D Den Kopf bis zum Anschlag auf den Sperring forcieren.

E Forzar el cabezal hasta el final del anillo de paro .

F Forcer la culasse jusqu'à ce qu'elle aille en butée sur la bague d'arrêt .

d

I Montare l'anello elastico di ritegno della testata .
ATTENZIONE! Assicurarsi che l'anello elastico sia impegnato a fondo nella sede.
Se necessario, forzarlo in sede con un punteruolo ed un martello.

D Den Kolbenring des Kopfes montieren.
ACHTUNG! Kontrollieren ob der Kolbenring in seinem Sitz richtig sitzt.
Wenn notig, in seinen Sitz mit einem Dubel und einen Hammer schlagen.

E Montar el anillo elastico de retenciòn de la culata .
CUIDADO! Asegurarse de que el anillo elàstico està colocado a fondo en la sede.
Si fuera necesario, forzarlo en el alojamiento utilizando un punzòn y un martillo.

F Monter la bague élastique de retenue de la culasse .
ATTENTION! S'assurer que la bague élastique est engagée à fond dans son siège.
S'il y a lieu, la forcer dans son siège à l'aide d'une pointe et d'un marteau.

e

I Montare in sede il cilindro di sterzatura .

D Den Lenkzylinder in seinen Sitz montieren.

E Montar en el alojamiento el cilindro de direcciòn .

F Monter le logement du cylindre de braquage .

f

I Bloccare il cilindro con le viti serrate con il metodo incrociato.
Coppia di serraggio: 300 - 310 Nm

D Zylinder mit den Schrauben blockieren; dabei die Schrauben entgegengesetzt und abwechselnd festschrauben.
Anzugsmoment 300 - 310 Nm

E Bloquear el cilindro con los tornillos apretados con el mètodo cruzado.
Par de torsiòn: 300 - 310 Nm

F Bloquer le cylindre à l'aide des vis serrès par le biais du mode croisé .
Couple de serrage: 300 - 310 Nm

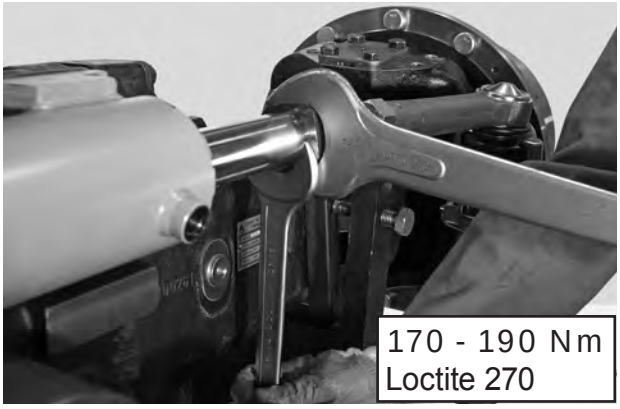

GB a

Apply LOCTITE 270 to the thread and connect the steering bars by screwing the terminals onto the piston stem.
Torque wrench setting: 170 - 190 Nm

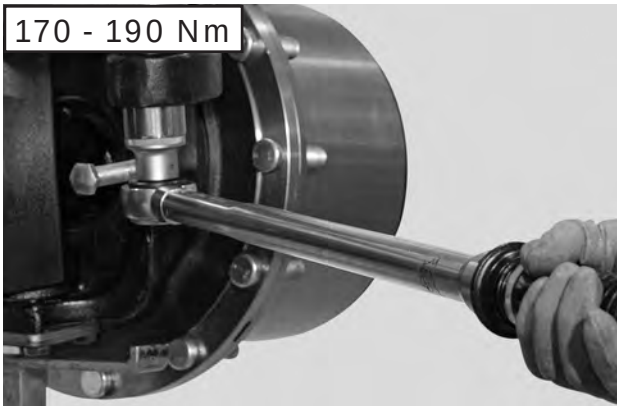

GB b

Insert the pins in the steering case and lock into position using a torque wrench setting of 170 - 190 Nm.
CAUTION! Check that rubber guards are intact.

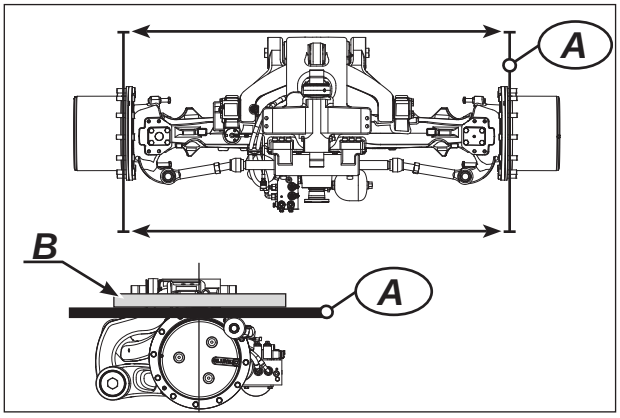

GB c

Apply tools “A” to the hubs and lock them.
Using a level “B”, check that tools are perfectly flat.
Tool “A” = 1 m long

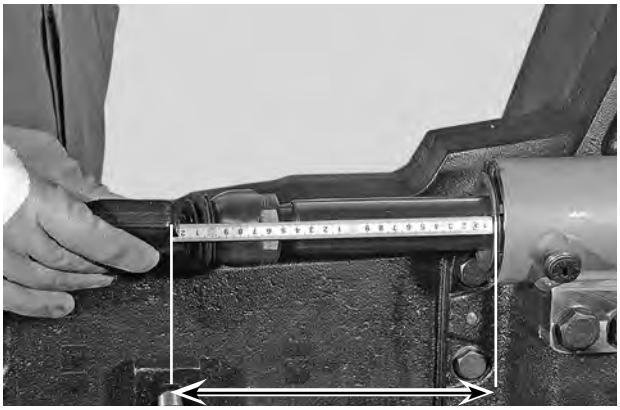

GB d

Centre the piston by slowly moving it first in one direction then in the other and position it half way on the stroke.

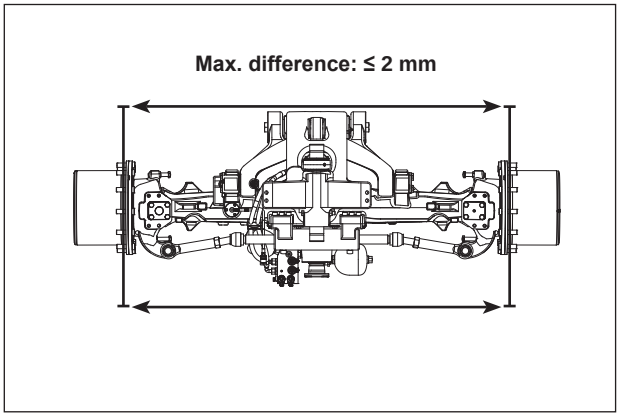

GB e

Without moving the piston, check front and rear size at the edge of tools.
Max. difference: ≤ 2 mm
NOTE. In order to check the rear size, rotate the bevel pinion and check that tools are flat.

GB f

CONVERGENCY ADJUSTMENT
Unloose the nuts and screw them onto the ball-and-socket joints. Hold the articulations still and rotate the ball-and-socket joints. Once the convergency has been adjusted, lock the nuts.
Torque wrench setting for nuts: 300 - 320 Nm

a

I Spalmare la filettatura con LOCTITE 270 e collegare le barre di sterzatura avvitando nello stelo del pistone i terminali.
Coppia di serraggio: 170 - 190 Nm

D Das Gewinde mit LOCTITE 270 schmieren und die Lenkstangen verbinden; dabei die Endstucke auf den Kolbenschaft festschrauben.
Anzugsmoment: 170 - 190 Nm

E Pasar por la rosca LOCTITE 270 y conectar las barras de direcciòn atornillando en el vastago del pistòn los terminales. Par de torsiòn: 170 - 190 Nm

F Enduire le filetage avec du LOCTITE 270 et brancher la barre de braquage en vissant les embouts dans la tige du piston.
Couple de serrage: 170 - 190 Nm

b

I Inserire nella scatola snodo i perni e bloccare la posizione serrandoli con una coppia di 170 - 190 Nm. ATTENZIONE! Controllare l'integrità delle protezioni in gomma

D In das Gelenkgehäuse die Stifte einsetzen un mit einem Anzugsmoment von 170 - 190 Nm fest-schrauben.
ACHTUNG! Kontrollieren ob die Gummiringe in Ordnung sind.

E Introducir en el càrter de la ròtula los pernos y bloquear la posiciòn apretàndolos con un par de 170 - 190 Nm.
CUIDADO! Controlar la integridad de las protecciones de goma.

F Introduire dans le boìtier articulation (7) les tourillons , puis bloquer dans la position en serrant ceux-ci un couple de 170 - 190 Nm.
ATTENTION! Contròler le bon état des protections en caoutchouc.

c

I Applicare sui mozzi portaruota gli attrezzi "A" e bloccarli.
Controllare con una livella "B" che gli attrezzi siano perfettamente in piano.
Attrezzo "A" = lunghezza 1m

D An den Radhalternaben die "A" Werkzeuge anbringen und blockieren.
Mit einer Libelle "B" kontrollieren, ob die Werkzeuge livelliert liegen.
Werkzeuge "A" = 1m lang

E Aplicar en los cubos portarruedas las herramientas "A" y bloquearlas.
Controlar utilizando un nivel "B" que las herramientas estén perfectamente niveladas entre sí.
Herramienta "A" = largo 1m

F Appliquer sur les moyeux des roues les outils "A" puis bloquer.
Contróler à l'aide d'un niveau "B" que les outils soient parfaitement à plat.
Outil "A" = 1m long

d

I Eseguire la centratura spostando lentamente il pistone prima in un senso e poi nell'altro, posizionandolo a metà della corsa.

D Die Zentrierung vornehmen, dabei den Kolben zuerst leicht in die eine, dann in die andere Richtung drehen und auf halbem Hubweg positionieren.

E Ejecutar el centraje desplazando lentamente el pistón primero en un sentido y después en el otro, posicionàndolo a mitad de la carrera.

F Effectuer le centrage en déplaçant lentement le piston d'abord dans un sens, puis dans l'autre, en le plaçant à mi-course.

e

I Senza spostare il pistone controllare la misura anteriore e posteriore all'estremità degli attrezzi.
Differenza max:≤ 2 mm
NOTA. Per controllare la misura posteriore, far ruotare il pignone conico e controllare planarità e parallelismo degli attrezzi.

D Ohne den Kolben zu verstellen, das vordere und hintere Maß am Endstück der Werkzeuge kontrollieren.
Max. Unterschied:≤ 2 mm
BEMERKUNG. Um das hintere Maß zu kontrollieren, das Kegelrad drehen und kontrollieren ob die Werkzeuge eben und parallel liegen.

E Sin desplazar el pistòn, controlar la medida anterior y posterior en los extremos de las herramientas.
Diferencia màx.: ≤ 2 mm
NOTA. Para controlar la medida posterior, hacer girar el pinòn cònico y controlar la planaridad y el paralelismo de las herramientas.

F Sans déplacer le piston, contròler les mesures avant et arriére de l'extrémitè des outils.
Différence max.: ≤ 2 mm
NOTE. Pour contròler la mesure arriére, faire tourner le pignon conique et contròler l'uniformité et le parallélisme des outils.

f

I REGOLAZIONE CONVERGENZA
Allentare i dadi ed avvitarli sui perni sferici.
Mantenendo fermi gli snodi, ruotare i perni sferici.
A convergenza regolata, bloccare i dadi.
Coppia di serraggio dadi: 300 - 320 Nm
NOTA: Agire in egual misura su entrambe le aste sterzo.

D KONVERGENZ EINSTELLEN
Die Muttern lockern und auf die kugeligen Stifte fest-schrauben. Die Gelenke festhalten und die kugeligen Stifte drehen. Wenn die Konvergenz eingestellt ist, die Muttern blockieren. Anzugsmoment der Muttern: 300 - 320 Nm.
HINWEIS: Bei beiden Lenkstangen auf die gleiche Weise vorgehen.

E REGULACIÓN CONVERGENCIA
Aflojar las tuercas y atornillarlas en los pernos esféricos.Manteniendo firmes las ròtulas, girar los pernos esféricos. Una vez regulada la convergencia, bloquear las tuercas . Par de torsiòn de las tuercas: 300 - 320 Nm. **NOTA:** Actuar con la misma medida en ambas varillas de dirección.

F REGLAGE DE LA CONVERGENCE
Desserrer les écrous puis visser les tourillons sphériques. Tout en maintenant fermement les articulations,tourner les tourillons sphériques. Lorsque la convergence est réglée, bloquer les écrous. Couple de serrage des écrous: 300 - 320 Nm. **REMARQUE :** Agir de la même mesure sur les deux tiges de la direction.

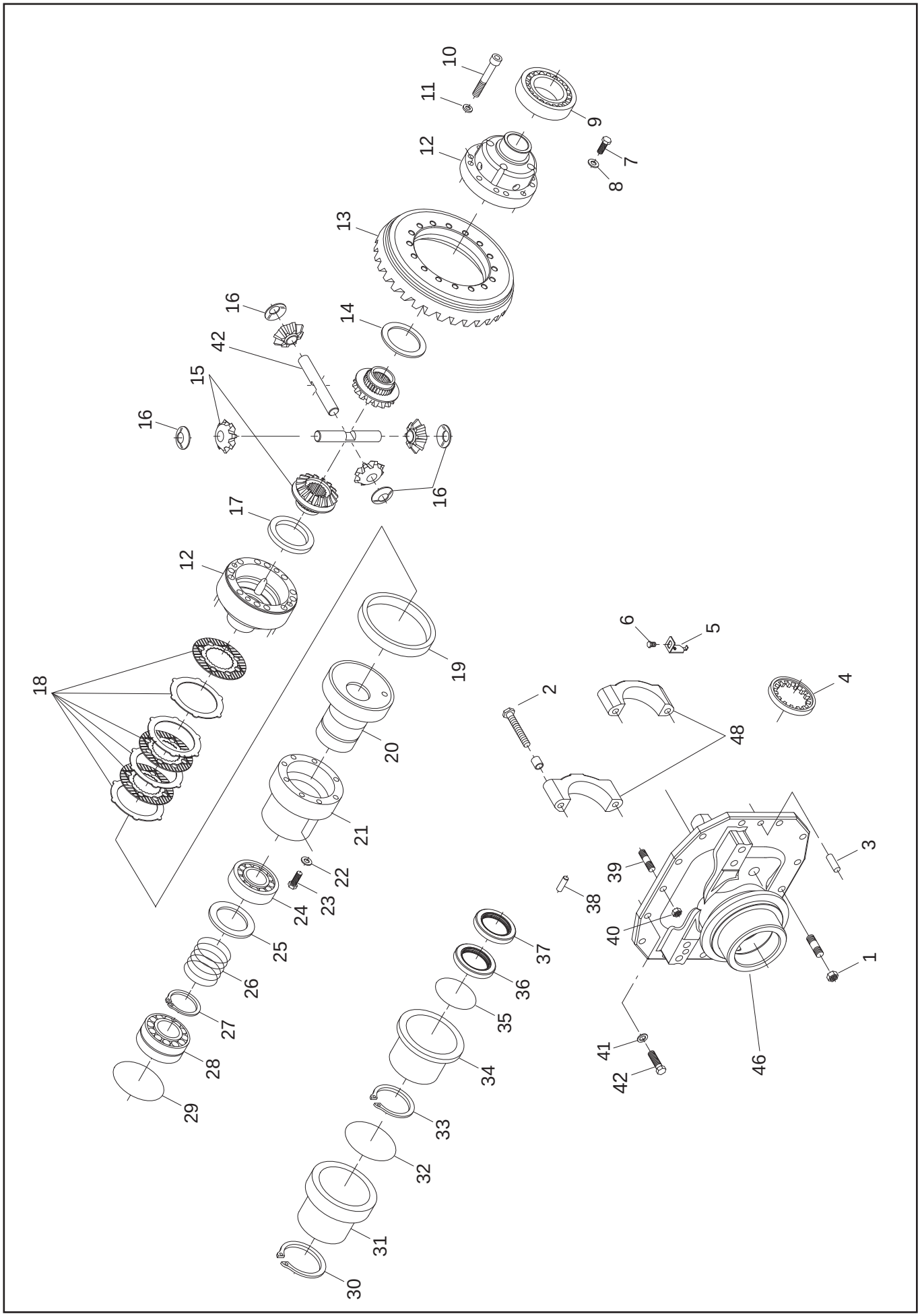
10
11
9
12
7
8
13
16
14
42
15
16
16
17
12
18
19
6
5
2
4
48
20
21
22
23
24
3
39
38
40
25
37
1
26
36
27
35
41
28
34
46
42
29
33
32
31
30

DISASSEMBLY - DISASSEMBLAGGIO - DEMONTIEREN - DESENSAMBLAR - DÉSASSEMBLER

GB a

Extract the cylinder (1) using a plastic hammer.
For details, see: HOW TO DISASSEMBLY THE STEERING CYLINDER

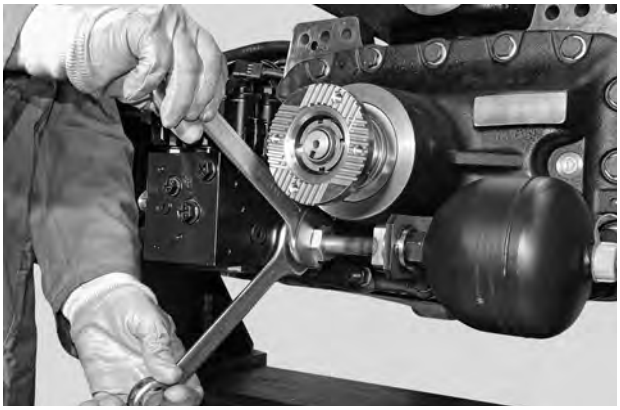

GB b

Loosen and remove the valve assembly retainer screws.
Remove the valve assembly.
For details, see: REMOVING THE CONTROL VALVE

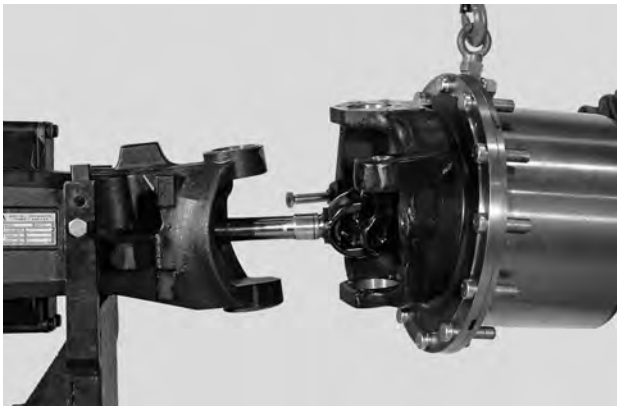

GB c

Remove the complete steering case.
For details, see: HOW TO REMOVE THE COMPLETE STEERING CASE.

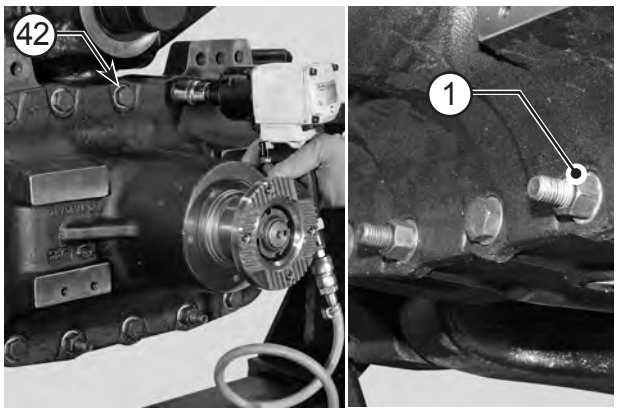

GB d

Unloose and remove the fittin screws (42), nuts (1) and relative washers (41) from the differential support (7).

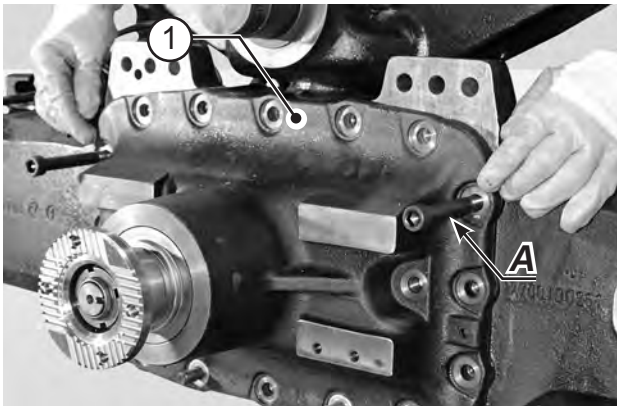

GB e

Tighten two safety studs ***"A"*** in the main body to avoid falling of the bevel gear pair.

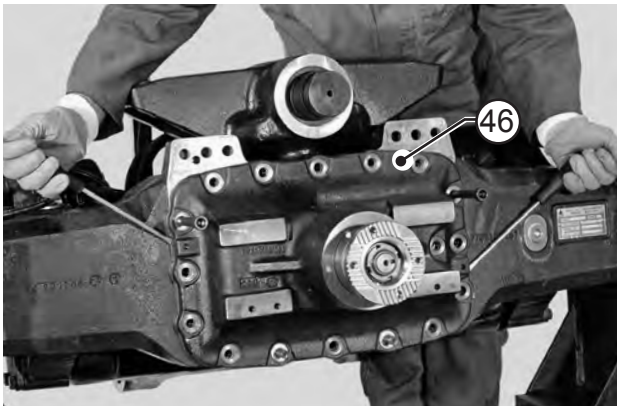

GB f

Using two levers, disjoin the cover (46).
Pay attention not to damage the surfaces.

a

I Estrarre il cilindro (1) utilizzando un mazzuolo in materiale plastico.
Per i dettagli, vedere: SMONTAGGIO CILINDRO DI STERZATURA

D Den Zylinder (1) mit einem Gummihammer herausschlagen.
Einzelheiten im Paragraph: LENKZYLINDER ABMONTIEREN

E Extraer el cilindro (1) utilizando un martillo de material plàstico.
Para los detalles, vease: DESMONTAJE CILINDRO DE DIRECCION

F Extraire le cylindre (1) à l'aide d'un maillet en matiére plastique.
Pour tout détail, voir: DEMONTAGE DU CYLINDRE DE BRAQUAGE

b

I Allentare e rimuovere le viti di fissaggio del gruppo valvole.
Rimuovere il gruppo valvole.
Per i dettagli, vedere: RIMOZIONE VALVOLA DI CONTROLLO

D Lösen Sie die Befestigungsschrauben des Venitlaggregats und nehmen Sie diese ab.
Entfernen Sie das Ventilaggregat.
Einzelheiten im Paragraph: ENTFERNEN DES KONTROLLVENTILS

E Aflojar y quitar los tornillos de fijación del grupo de válvulas.
Sacar el grupo de válvulas.
Para los detalles, vease: EXTRACCIÓN VÁLVULA DE CONTROL

F Desserrer et enlever les vis de retenue du groupe de soupapes.
Enlever le groupe de soupapes.
Pour tout détail, voir: EXTRACTION DE LA SOUPAPE DE CONTRÔLE

c

I Rimuovere il gruppo snodo completo.
Per i dettagli, vedere: RIMOZIONE SCATOLA SNODO COMPLETA.

D Komplettes Gelenkaggregat abnehmen.
Weitere Einzelheiten im Paragraph: KOMPLETTES GELENKGEHÄUSE ABMONTIEREN.

E Remover el grupo ròtula completo.
Para los detalles, vease: REMOCION CARTER DE ROTULA COMPLETO.

F Enlever le groupe d'articulation complet.
Pour tout détail, voir: DEPOSE DU BOITIER ARTICULATION COMPLET.

d

I Allentare ed asportare le viti di ritegno (42), dadi (1) e relative rondelle (41) del supporto differenziale (7).

D Schrauben (42), Muttern (1) die Zwischenlegscheibe (41) das Ausgleichsgetriebe (7) lockern und abschrauben.

E Aflojar y sacar los tornillos (42) de retención, las tuercas (1) y la arandela de espesor correspondiente (41) de soporte differential (7).

F Desserrer et enlever les vis (42), les ecrous (1) et la relative rondelle de rasage (41). de fixation du differentiel support (7).

e

I Avvitare nel corpo centrale due prigionieri ***"A"*** di sicurezza per evitare la caduta della supportazione coppia conica.

D In den zentralen Körper zwei Stiftschrauben ***"A"***, um das Herunterfallen der Befestigung des Kegelräderpaars zu vermeiden.

E Atornillar en el cuerpo dos prigionieros ***"A"*** de seguridad para evitar que caiga el soporte del par cónico.

F Dans le corps central, serrer deux goujons ***"A"*** de sécurité pour éviter la chute du support du couple conique

f

I Utilizzando due leve, staccare il coperchio (46).

D Mit Hilfe von zwei Hebeln, den Deckel (46) trennen . Achtung, die Flächen nicht verkratzen.

E Utilizando dos palancas, desprender la tapa (46). Tener cuidado a fin de no estropear las superficies.

F A l'aide de deux leviers, décrocher la tapa (46). Faire trés attention de ne pas abîmer les plateaux.

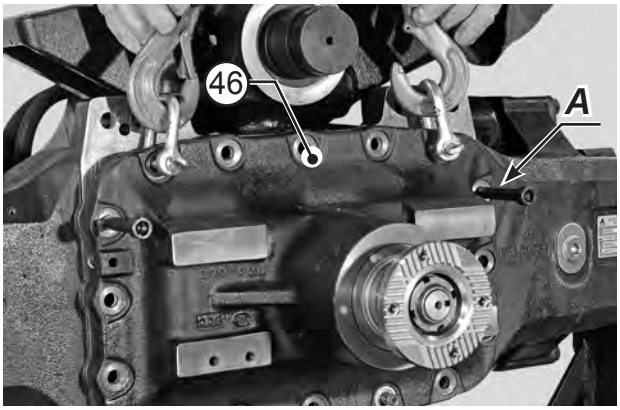

GB a

Connect the whole reduction gear body (46) to a hoist and remove the studs ***"A"*** previously left in place for safety.
Using a plastic hammer, pull away the whole reduction gear body (46).

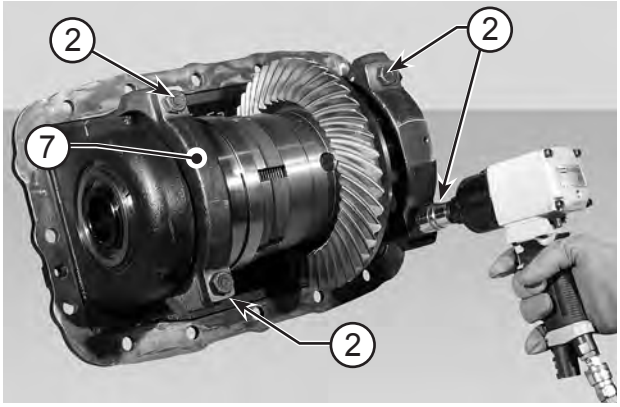

GB b

Unloose and remove the fittin screws (2) from the differential support (7).

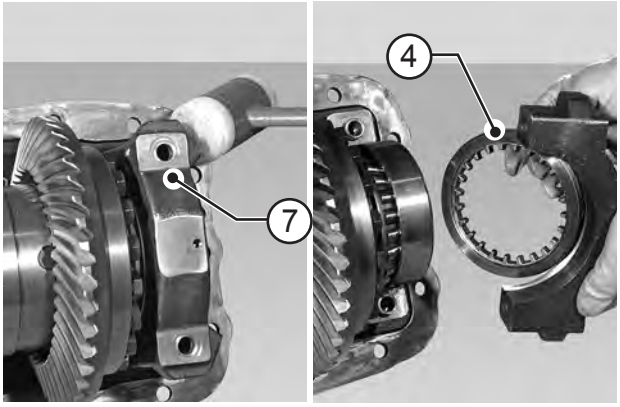

GB c

Disjoin and remove both differential support (7) complete with ring nut (4).

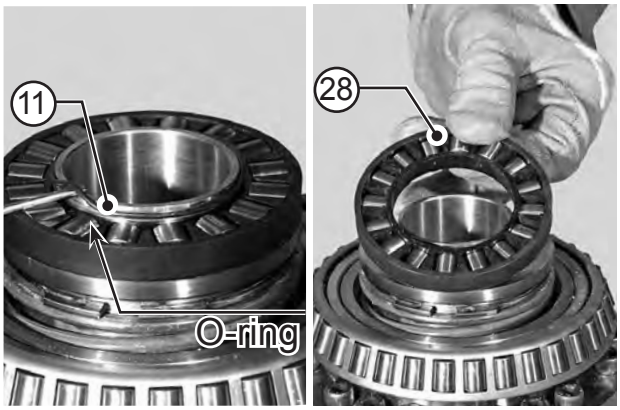

GB d

Remove the O-ring (11) and thrust bearing (28).

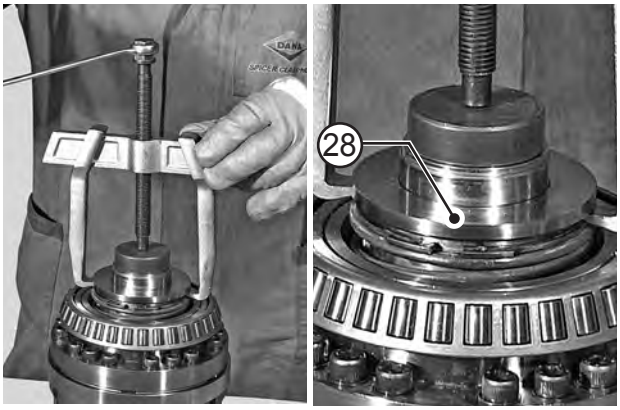

GB e

Remove the thrust block of the thrust bearing (28).

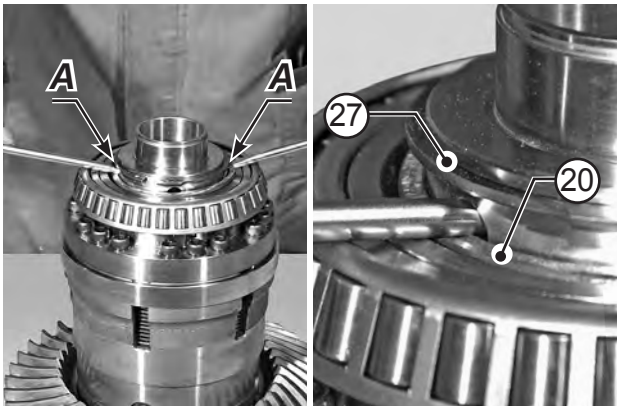

GB f

Insert two screwdrivers into the appropriate holes ***"A"*** on the pressure plate sleeve (20) to counteract the spring (26) when removing the retaining ring (27).

a

I Collegare il corpo riduttore completo (46) ad un mezzo di sollevamento ed asportare i prigionieri ***"A"*** lasciati in sicurezza.
Utilizzando un mazzuolo in materiale plastico, rimuovere il corpo riduttore (46) completo.

D Den kompletten Reduziererkörper (46) an ein Hebezeug befestigen und die zuvor zur Sicherheit zurückgelassenen Stiftschrauben ***"A"*** abschrauben.
Mit einem Gummihammer, den kompletten Reduziererkörper (46) abnehmen.

E Conectar el cuerpo reductor completo (46) a un medio de elevacion y sacar los prigionieros ***"A"*** dejadas en su lugar para seguridad.
Utilizando un martillo en material plastico, remover el cuerpo reductor (46) completo.

F Brancher le corps réducteur complet (46) à un moyen de relevage, puis enlever les goujons ***"A"*** laissée dans leursiége pour plus de sécurité .
A l'aide d'un maillet en matiére plastique, enlever le corps réducteur (46) complet.

b

I Allentare ed asportare le viti (2) di ritegno del supporto differenziale (7).

D Schrauben (2) das Ausgleichsgetriebe (7) lockern und abschrauben.

E Aflojar y sacar los tornillos (2) de retención de soporte differential (7).

F Desserrer et enlever les vis (2) de fixation du differentiel support (7).

c

I Rimuovere i supporti differenziale (7) e ghiera (4).

D Das Ausgleichsgetriebe (7) und die Nutmutter (4) trennen.

E Desprendert el soporte (7) y la virola (4).

F Décrocher le support (7) et le collier de serrage (4).

d

I Rimuovere anello OR (11) e cuscinetto reggispinta (28).

D O-ring (11) und Drucklager (28) entfernen.

E Sacar el anillo OR (11), rodamiento de regulacion del empuje (28).

F Enlever le bague OR (11) et butee d'embrayage (28).

e

I Rimuovere la ralla del cuscinetto reggispinta (28).

D Scheibe vom aüßeren Drucklager (28) abnehmen.

E Remover la rangua del cojinete (28).

F Enlever la crapaudine de butee d'embrayage (28).

f

I Inserire due cacciaviti negli appositi fori ***"A"*** sul manicotto spingidisco (20) per contrastare la molla (26) al momento della rimozione dell'anello di ritegno (27).

D Führen Sie beim Entfernen des Dichtrings (27) zwei Schraubenzieher in die entsprechenden Bohrungen ***"A"*** an der Muffe der Kupplungsscheibe ein (20).

E Meter dos destornilladores en los agujeros ***"A"*** del manguito empuja-disco (20) para retener el muelle (26) cuando se quita el anillo de retén (27).

F Introduire deux tournevis adéquats dans les trous prévus ***"A"*** pour cela sur le manchon plateau d'embrayage (20) pour réussir à maîtriser le ressort (26) au moment de retirer l'anneau de blocage (27).

GB a

Remove snap ring (27) and the piston return spring (26).

GB b

Extract the bearing (24) from the differential carrier.

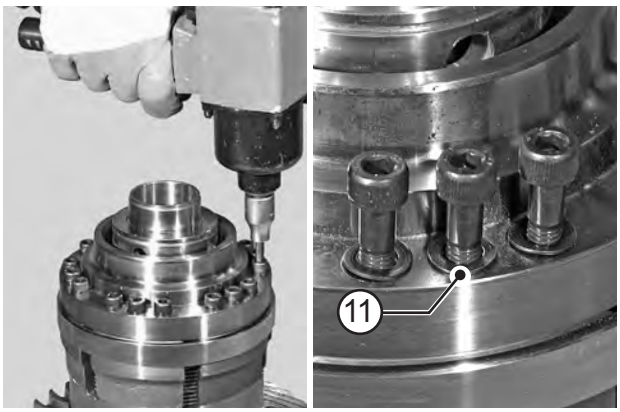

GB c

Remove the fittin screws (23) and relative washers (22) from the differential.

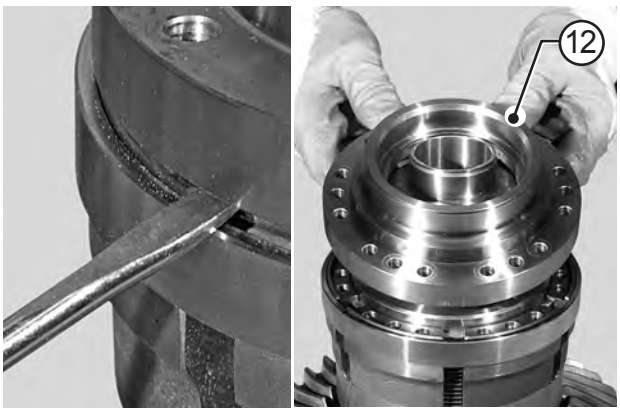

GB d

Remove the cover (12) from the blocking side of the differential unit.

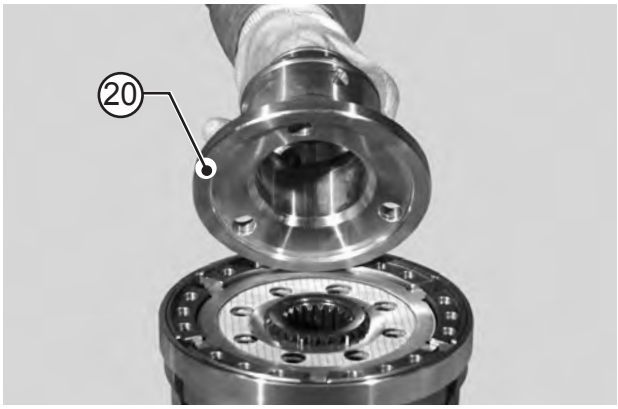

GB e

Remove the pressure plate sleeve (20)

GB f

Remove the hydraulic block discs (18) one after the other.
NOTE. If the disks do not need replacing, avoid switching their position.

a

I Rimuovere anello elastico (27) e la molla (26) di ritorno del pistone.

D Spannring (26) und die Rückholfeder (26) des Kolbens entfernen.

E Sacar el anillo elastico (27) y el muelle (26) de retorno del pistón.

F Enlever la bague èlastique (27) et le ressort (26) de retour du piston.

b

I Estrarre il cuscinetto (24) dalla scatola differenziale.

D Lager (24) aus dem Differentialgehause abnehmen.

E Extraer los cojinete (24) de la caja del diferencial.

F Enlever les palier (24) du differentiel support.

c

I Allentare ed asportare le viti di ritegno (23) e relative rondelle (22) dal differenziale.

D Die Schrauben (23) und die Zwischenlegscheibe (22) aus dem Differentialgehause entfernen.

E Aflojar y sacar los tornillos (23) de retención y la arandela de espesor correspondiente (22) del differential.

F Desserrer et enlever les vis (23) et es ecrous (1) et la relative rondelle de rasage (22) du differentiel.

d

I Rimuovere il coperchio (12) lato bloccaggio differenziale.

D Den Deckel auf der Blockierungsseite (12) des Differentials ent fernen.

E Extraer la tapa (12) que bloca el diferencial.

F Enlever le couvercle (12) de la coté du blocage differential.

e

I Rimuovere il manicotto spingidisco (20)

D Der Muffe der Kupplungsscheibe ein (20) entfernen.

E Remover el manguito empuja-disco (20)

F Enlever les le manchon plateau d'embrayage (20).

f

I Estrarre in sequenza i dischi bloccaggio idraulico (18).
NOTA. Se i dischi non vanno sostituiti, evitare lo scambio di posizione.

D Die Bremslamellen (18) der hydraulischen Blockierung einzeln herausnehmen.
BEMERKUNG. Sollen die Scheiben nicht ausgewechselt werden, diese in der richtigen Reihenfolge zur Seite legen.

E Extraer secuencialmente los discos (18) de blocaje hidráulico.
NOTA. Si los discos no tienen que ser sustituidos, evitar el intercambio de posición.

F Extraire en séquence les disques blocage hydraulique (18).
NOTE. Si les disques ne sont pas à remplacer, éviter le changement de position.

GB a

Extract the bearings (9) from the differential carrier.

GB b

Remove the fittin screws (10) and relative washers (11) of the crown (28)

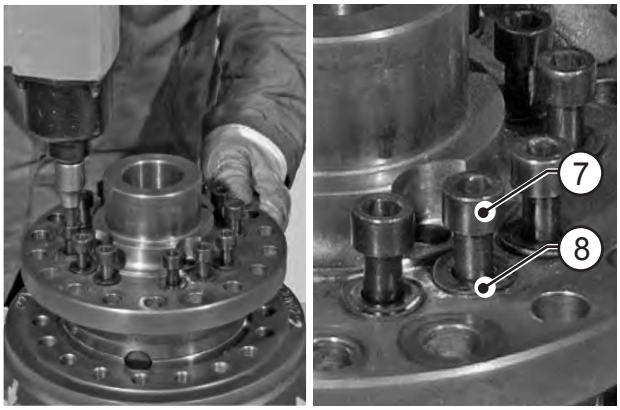

GB c

Remove the screws (7) and relative washers (8) jointing the differential unit half box .

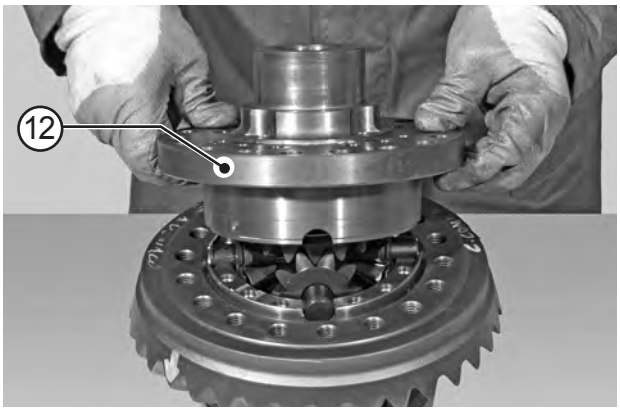

GB d

Using a plastic hammer, take the half box (12) to pieces.
NOTE. Note down the coupling marks.

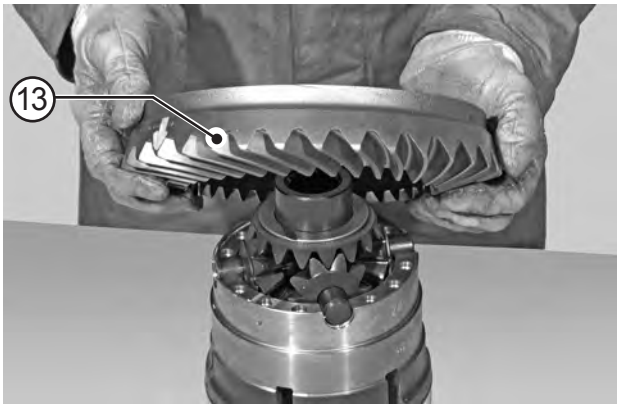

GB e

Extract the crown wheel (13).

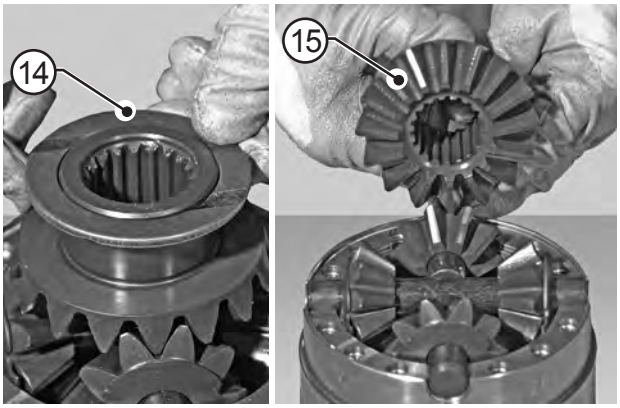

GB f

Remove the shim washer (14) and the planetary gear (15) on the crown wheel side.

a

I Estrarre il cuscinetto (9) dalla scatola differenziale.

D Lager (9) aus dem Differentialgehause abnehmen.

E Extraer los cojinete (9) de la caja del diferencial.

F Enlever les palier (9) du differentiel support.

b

I Allentare ed asportare le viti di ritegno (10) di ritegno della corona (28) e relative rondelle (11).

D Die Schrauben (10) und die Zwischenlegscheibe (11) des Kranzes (28) abschrauben.

E Aflojar y sacar los tornillos (10) de retención de retenciòn de la corona (28)y la arandela de espesor correspondiente (11) .

F Desserrer et enlever les vis (10 de fixation de la couronne (28)) et le relative rondelle de rasage (11).

c

I Rimuovere le viti (7) di unione della semiscatola differenziale e relative rondelle (8).

D Schrauben (7) und die Zwischenlegscheibe (8) abnehmen, die das halbe Differentialgehause zusammen halten.

E Remover los tornillos (7) de union de la semi-caja diferencialy la arandela de espesor correspondiente (8) .

F Enlever les vis (7) d'union de la moitié du boîtier différentiel et) et le relative rondelle de rasage (8).

d

I Utilizzando un mazzuolo in materiale plastico scomporre la semiscatola differenziale (12).
NOTA. Annotare la marcatura di accoppiamento.

D Mit einem Gummihammer das halbe Differentialgehause (12) zerlegen.
BEMERKUNG. Die Kupplungsmarkierung notieren.

E A l'aide d'un maillet en matiére plastique décomposer la moitié du boîtier différentiel (12).
REMARQUE. Prendre note de la marque d'accoumplement.

F Utilizando un martillo en material plastico decomponer la semicaja diferencial (12).
NOTA. Anotar la marcatura de acoplamiento.

e

I Estrarre la corona (13).

D Das Kegelrad (13) abnehmen.

E Sacar la corona (13).

F Extraire la couronne (13).

f

I Asportare la rondella di rasamento (14) e l'ingranaggio planetario (15) lato corona.

D Die Passscheibe (14) und das Planetenzahnrad (15) auf der Kranzseite abnehmen.

E Quitar la arandela de desgaste (14) y el engranaje planetario (15) lado corona.

F Enlever la rondelle de frottement (14) et l'engrenage planétaire (15) côté couronne.

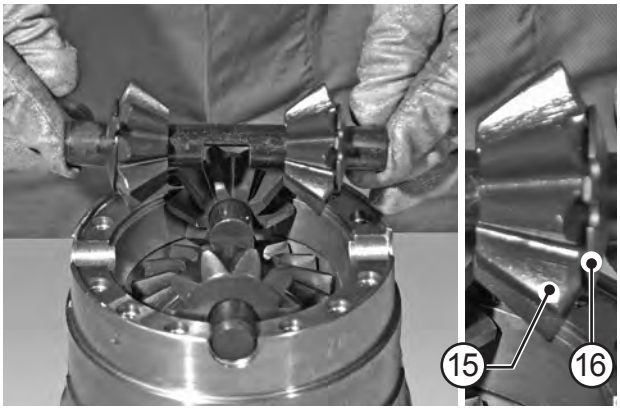

GB a

Remove shafts (47), complete with planet wheels (15) and spherical shoulder washers (16).

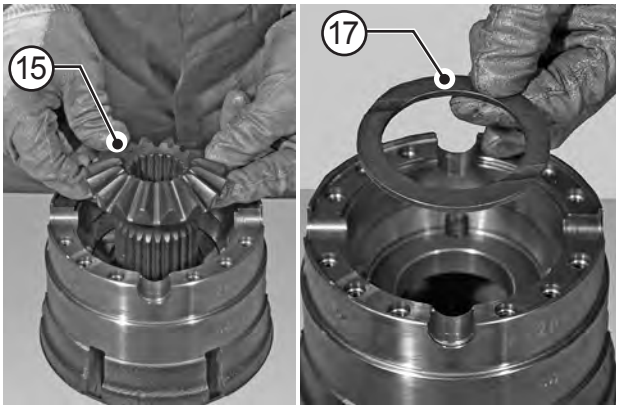

GB b

Remove the shoulder washer (17) and the planetary gear (15) from the differential lock side.

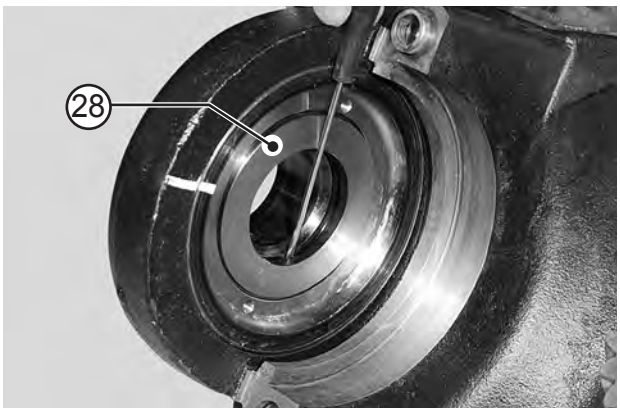

GB c

Remove the disc of the thrust bearing (28) of the differential lock piston.

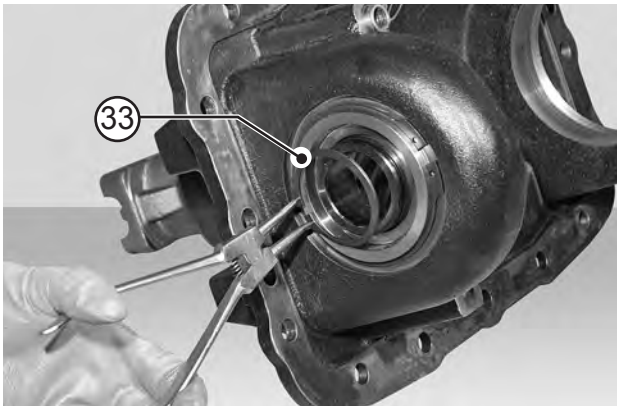

GB d

Remove the snap ring (33).

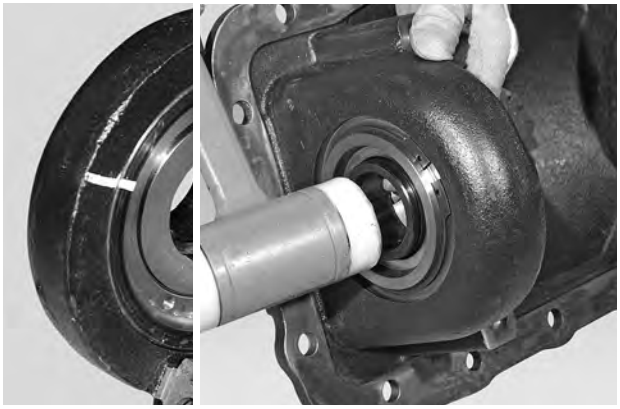

GB e

Remove the piston (11).
Mark the position of the piston (3) relative to the differential support(47).

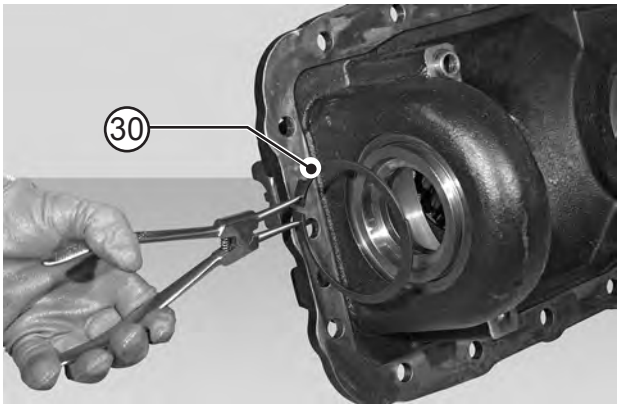

GB f

Remove the snap ring (30).

a

I Asportare gli alberi (47) completi di satelliti (15) e rondelle sferiche di spallamento (16).

D Die Wellen (47) samt Satelliten (15) und Bordscheiben (16) abnehmen.

E Sacar los ejes (47) completos de satelites (15) y arandelas esfericas del respaldo (16).

F Retirer les arbres (47) munis de leurs satellites (15) et les rotules d'épaulement (16).

b

I Asportare lo spallamento (17) e l' ingranaggio planetario (15) lato blocco differenziale.

D Das Schulterlager (17) und das Planetenzahnrad (15) auf der Seite der Differentialsperre abnehmen.

E Quitar el apoyo (17) y el engranaje planetario (15) lado dispositivo de bloqueo.

F Enlever l'épaulement (17) et l'engrenage planétaire (15) côté dispositif de blocage du différentiel.

c

I Rminuovere la ralla del cuscinetto reggispinta (28) del pistone blocco differenziale.

D Den Kranz des Axiallagers (28) des Kolbens der Differentialsperre entfernen.

E Retirar la rangua del cojinete de tope (28) del pistón dispositivo de bloqueo del diferencial.

F Enlever la rondelle de butée du palier de butée (28) du piston de blocage du différentiel.

d

I Rimuovere anello elastico (33).

D Den Spannring (33) entfernen.

E Sacar el anillo elastico (33).

F Enlever bague élastique (33).

e

I Rimuovere il pistone (11).
Segnare la posizione del pistone (3) rispetto al supporto differenziale (7).

D Des Kolben (11) entfernen.
Die Position des Kolbens (3) zur das Ausgleichsgetriebe (7) anzeichnen.

E Sacar el piston (11).
Marcar la posición del pistón (3) respecto al soporte differential (7)

F Enlever el piston (11).
Repérer la position du piston (3) par rapport au differentiel support (7).

f

I Rimuovere anello elastico (30).

D Den Spannring (30) entfernen.

E Sacar el anillo elastico (30).

F Enlever bague élastique (30).

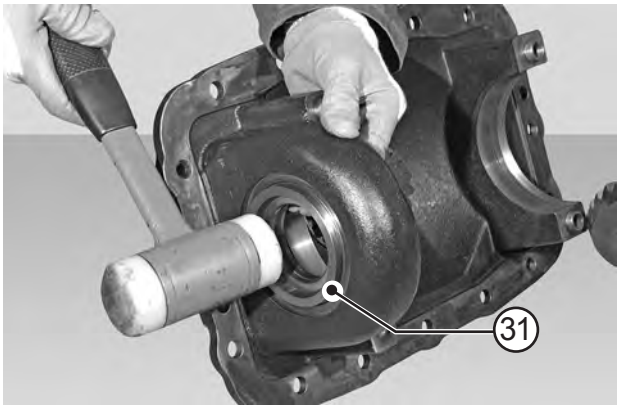

GB a

Remove bush (31) along with O-ring (32).

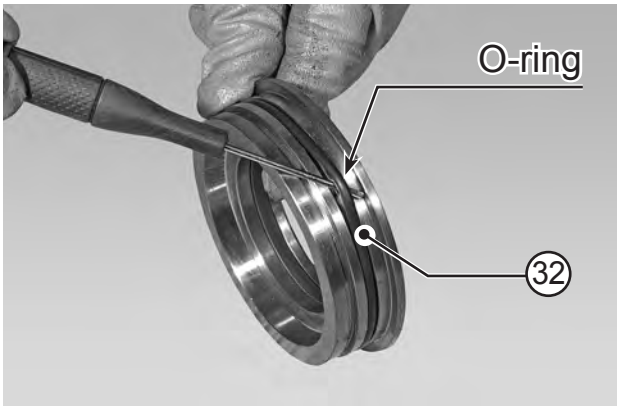

GB b

Remove the O-Ring (32).

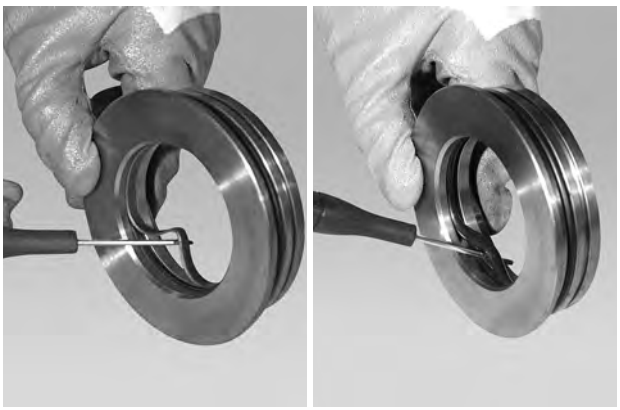

GB c

Remove rings and seal rings from bush (31).
NOTE. 1 - All seals must be replaced every time the unit is disassembled. 2 - Particular attention must be paid not to damage the seats of both seals and piston slide.

GB d

Remove rings and seal rings from cylinder.
NOTE. 1 - All seals must be replaced every time the unit is disassembled.
2 - Particular attention must be paid not to damage the seats of both seals and piston slide.

a

I Rimuovere la boccola (31) completa di guarnizione OR (32).

D Buchse (31) samt ORing (32) abnehmen.

E Remover el casquillo (31) completo de guarniciones OR (32).

F Extraire la douille (31) équipée de garnitures OR (32).

b

I Rimuovere anello O-Ring (32).

D O-ring (32) abnehmen.

E Remover el segmento OR (32).

F Enlever le bague OR (32).

c

I Rimuovere dalla boccola (31) gli anelli O-ring e l'anello di tenuta.
NOTA. 1 - Tutte le tenute devono essere sostituite ad ogni smontaggio.
2 - Prestare molta attenzione per non rovinare le sedi delle guarnizioni e dello scorrimento del pistone.

D Vom Buchse (31) O-ringe und Abschaber wegnehmen.
BEMERKUNG. 1 - Alle Dichtungen müssen jedesmal gewechselt werden, wenn der Zylinder zerlegt wird.
2 - Sehrvorsichtig vorgehen, um die Dichtungs- und Kolbensitze nicht zu beschädigen.

E Remover del casquillo (31) los anillos OR y los anillos raspadores.
NOTA. 1 - Todas las estanqueidades tienen que ser sustituidas a cada desmontaje. 2 - Tener mucho cuidado a fin de no danàr los alojamientos de las juntas y del deslizamiento del pistón.

F Enlever du douille (31) anneaux OR et les anneaux racleurs.
NOTE. 1 - Toutes les étanchèités doivent étre remplacèes à chaque démontage. 2 - Faire très attention à ne pas abîmer les logements des garnitures et de coulissement du piston.

d

I Rimuovere dal cilindro gli anelli O-ring e l'anello di tenuta.
NOTA. 1 - Tutte le tenute devono essere sostituite ad ogni smontaggio.
2 - Prestare molta attenzione per non rovinare le sedi delle guarnizioni e dello scorrimento del pistone.

D Vom Zylinder (3) O-ringe und Abschaber wegnehmen.
BEMERKUNG. 1 - Alle Dichtungen müssen jedesmal gewechselt werden, wenn der Zylinder zerlegt wird.
2 - Sehrvorsichtig vorgehen, um die Dichtungs- und Kolbensitze nicht zu beschädigen.

E Remover del cilindro los anillos OR y los anillos raspadores.
NOTA. 1 - Todas las estanqueidades tienen que ser sustituidas a cada desmontaje. 2 - Tener mucho cuidado a fin de no danàr los alojamientos de las juntas y del deslizamiento del pistòn.

F Enlever du cylindre (3) anneaux OR et les anneaux racleurs.
NOTE. 1 - Toutes les étanchèités doivent étre remplacèes à chaque démontage. 2 - Faire très attention à ne pas abîmer les logements des garnitures et de coulissement du piston.

ASSEMBLY - ASSEMBLAGGIO - MONTIEREN - ENSAMBLAR - ASSEMBLER

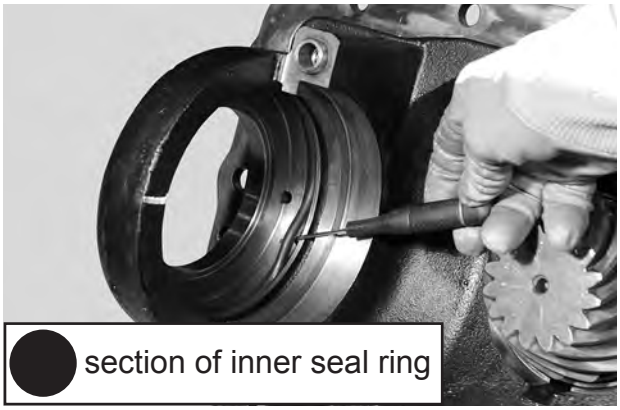

GB a

Install a new seal-inner piston (O-ring).
Lubricate the O-ring before fitting.

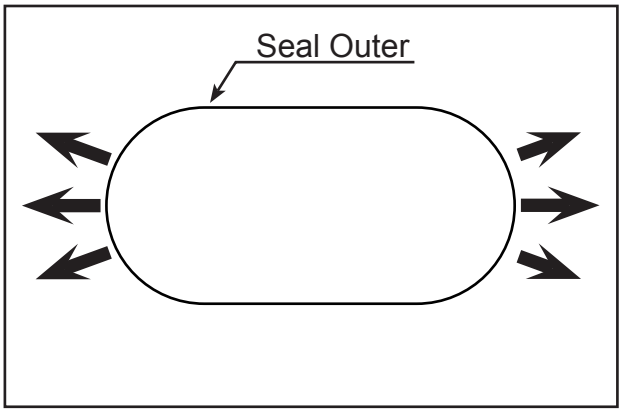

GB b

TO ENSURE CORRECT INSTALLATION
Before installing the new external piston sealing ring, stretch the diameter manually by a few millimetres.

GB c

After applying grease, install the seal ring inside the cylinder.

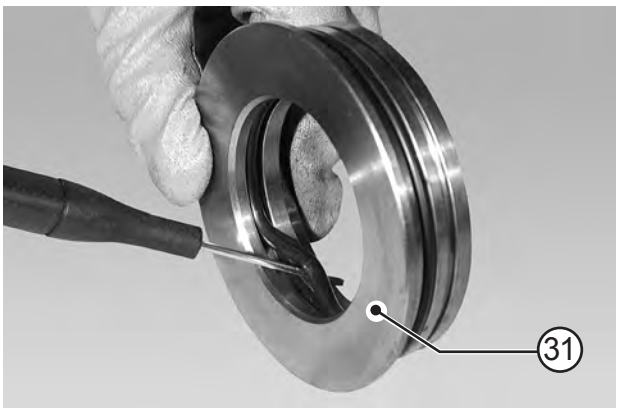

GB d

After applying grease, install the O-ring of the piston inside the bush (31) .

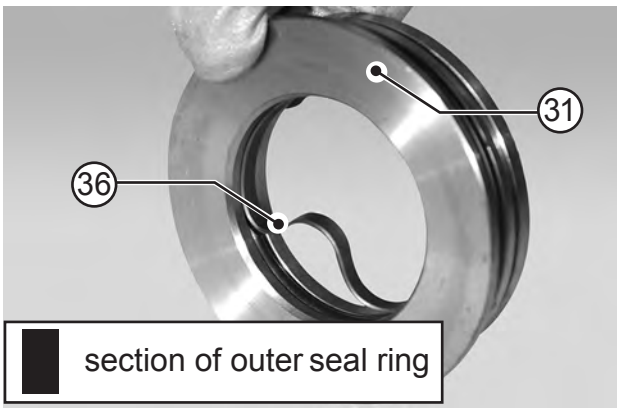

GB e

After applying grease, install the seal ring (36) inside the bush (31).

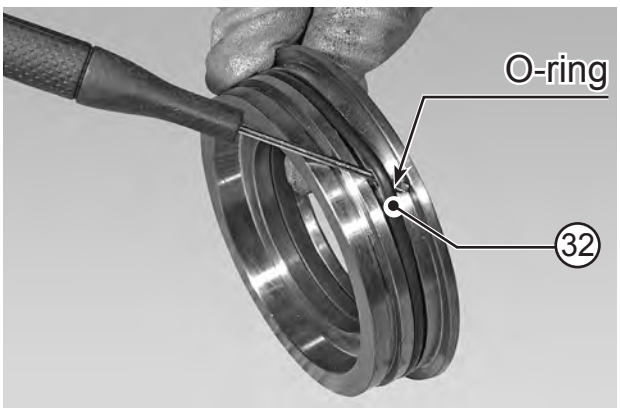

GB f

Install O-Ring (32).

a

I Montare l'anello di tenuta interno del pistone (O-ring).
Lubrificare l'anello O-ring prima del montaggio.

D Neuer innerer Siegelring des Kolbens (O-ring) montieren.
Schmieren Sie den O-Ring vor der Montage.

E Lubrifique la junta tórica (O-ring) antes del montaje.

F Lubrifier l'anneau torique (O-ring) avant de l'installer.

b

I ***PER UNA CORRETTA INSTALLAZIONE***
Prima di installare il nuovo anello di tenuta esterno del pistone, aumentare il diametro di qualche millimetro effettuando una trazione con le mani.

D ***ZUR FEHLERFREIEN INSTALLATION*** den Durchmesser des neuen Dichtungsrings vor dessen Anbringen um einige Millimeter durch das Auseinanderziehen mit den Händen vergrößern.

E ***PARA UNA CORRECTA INSTALACIÓN***
Antes de instalar la nueva anilla de fijación externa del pistón, aumentar el diámetro en unos milímetros realizando una tracción con las manos.

F ***POUR EFFECTUER UN MONTAGE CORRECT***, avant de monter la nouvelle bague d'étanchéité externe du piston, en augmenter le diamètre de quelques millimètres en tirant un peu dessus avec les mains.

c

I Lubrificare con grasso ed installare nel cilindro l'anello di tenuta.

D Mit Fett die Siegelring schmieren und in den Zylinder montieren.

E Lubricar con grasa e instalar en el cilindro el anillo raspador.

F Lubrifier avec du gras et installer dans le cylindre l'anneau racleur.

d

I Lubrificare con grasso ed installare nella boccola (31) l'anello OR .

D Mit Fett den O-ring schmieren und in den Kolben montieren.

E Lubricar con grasa e instalar en el casquillo (31) el anillo OR .

F Lubrifier avec du gras et installer dans la douille (31) l'anneau OR .

e

I Lubrificare con grasso ed installare nella boccola (31) l'anello di tenuta (36).

D Mit Fett die Siegelring(36) schmieren und in den Buchse (31) montieren.

E Lubricar con grasa e instalar en el casquillo (31) el anillo raspador.

F Lubrifier avec du gras et installer dans la douille (31) l'anneau racleur (36).

f

I Installare anello O-Ring (32).

D O-Ring (32) montieren.

E Insertar el segmento OR (32).

F Inserer le bague OR (32).

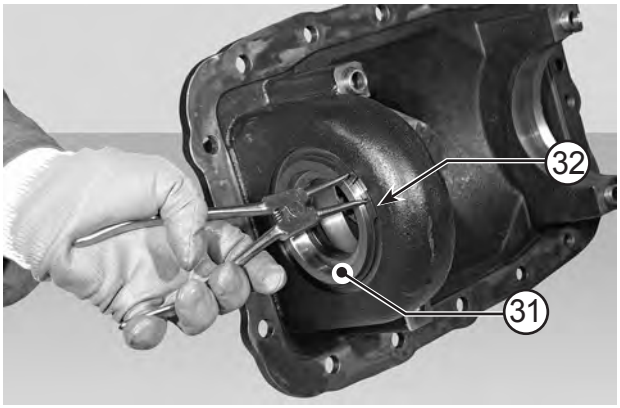

GB a

Install the bush (31) along with O-ring (32).
Install the snap ring (30).
NOTE. Make sure that the ring is properly set in its seat.

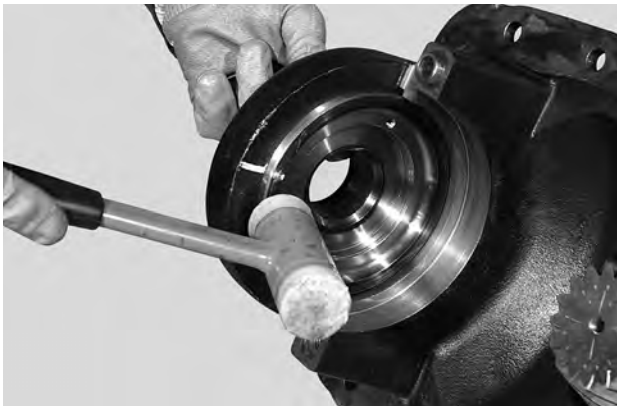

GB b

Mind the position of assemblage.
Lubricate the piston seating.
Install the piston pack

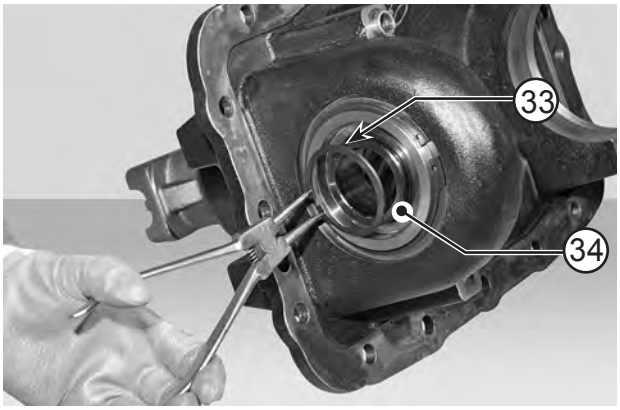

GB c

Install the snap ring (33).
NOTE. Make sure that the ring is properly set in its seat.

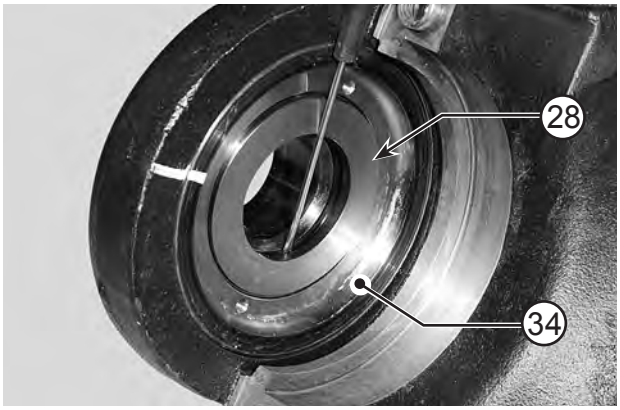

GB d

Fit the thrust bearing disc (28) in the piston (34).

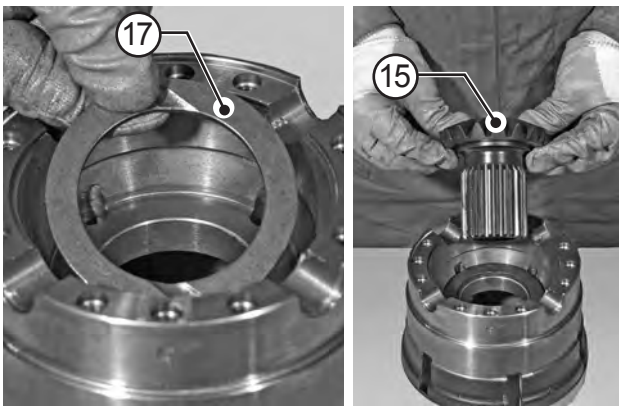

GB e

Insert planetary gear wheel (15) together with washer (17).

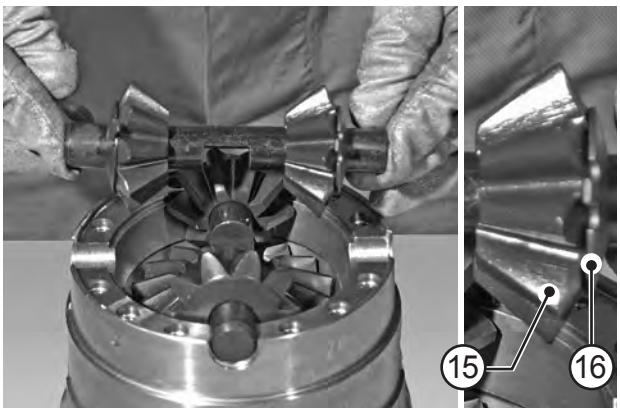

GB f

Install the planetary gears (15) and spherical shoulder washers (16) onto the shafts (47).

a

I Installare la boccola (31) completa di guarnizione OR (32). Montare l'anello elastico di fermo (30) .
NOTA. Assicurarsi che l'anello elastico sia perfettamente in sede.

D Buchse (31) samt ORing (32) installieren.
Den elastischen Ring (30) montieren.
BEMERKUNG. Sicherstellen, daû der Federring richtig sitzt.

E Instalar el casquillo (31) completo de guarniciones OR (32).
Montar el anillo elástico (30).
NOTA. Asegurarse de que el anillo elastico se encuentra perfectamente en sede.

F Installer la douille (31) équipée de garnitures OR (32).
Monter la bague élastique (30).
NOTE. S'assurer que l'anneau soit parfaitement dans son logement.

b

I Rispettare la posizione di montaggio.
Lubrificare la sede del pistone.
Installare il gruppo pistone.

D Die Position der Montage beachten.
Die Aufnahme des Kolbens schmieren.
Gruppe Kolbengruppe installieren.

E Respetar la posición de montaje.
Lubrificar la ubicación del pistón.
Instalar el grupo piston.

F Respecter la position d'assemblage.
Installer le groupe piston.
Lubrifier le logement du piston.

c

I Montare l'anello elastico di fermo (33) .
NOTA. Assicurarsi che l'anello elastico sia perfettamente in sede.

D Den elastischen Ring (33) montieren.
BEMERKUNG. Sicherstellen, daû der Federring richtig sitzt.

E Montar el anillo elástico (33).
NOTA. Asegurarse de que el anillo elastico se encuentra perfectamente en sede.

F Monter la bague élastique (33).
NOTE. S'assurer que l'anneau soit parfaitement dans son logement.

d

I Montare nel pistone (34) la ralla del cuscinetto reggispinta (28).

D Den Lagerkäfig des Axiallagers (28) im Kolben (34) montieren.

E Montar en el pistón (34) la rangua del cojinete de tope (28).

F Monter dans le piston (34) la rondelle de butée du palier de butée (28).

e

I Montare il planetario (15) completo di rondella di spallamento (17).

D Zentralzahnrad (15) zusammen mit der Bordscheibe montieren (17).

E Montar el planetaro (15) completo con anillo de adaptación (17).

F Monter le planétaire (15) complet de rondelle de support (17).

f

I Montare sugli alberi (47) gli ingranaggi satelliti (15) e le rondelle sferiche di spallamento (16).

D Auf die Welle (47) die Planetengetriebe (15) und die Bordscheiben (16) montieren.

E Montar sobre los ejes (47) los engranajes satelites (15) y las arandelas esfericas del respaldo (16).

F Monter sur les arbres (47) les pignons satellites (15) et les rotules d'épaulement (16).

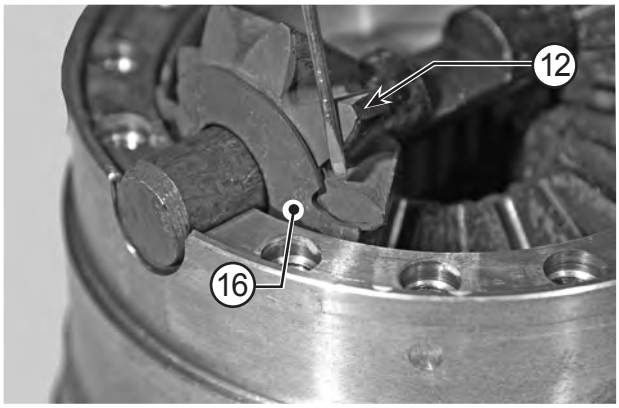

GB a

Insert the anti-rotation tooth of the spherical washer (16) into the special slot of the differential semi-box (12).

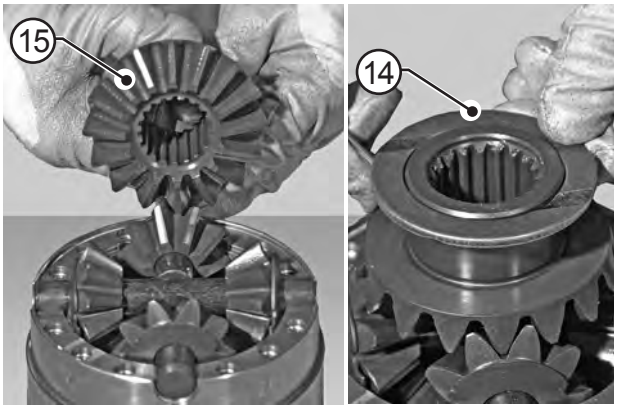

GB b

Insert planetary gear wheel (15) together with washer (12).

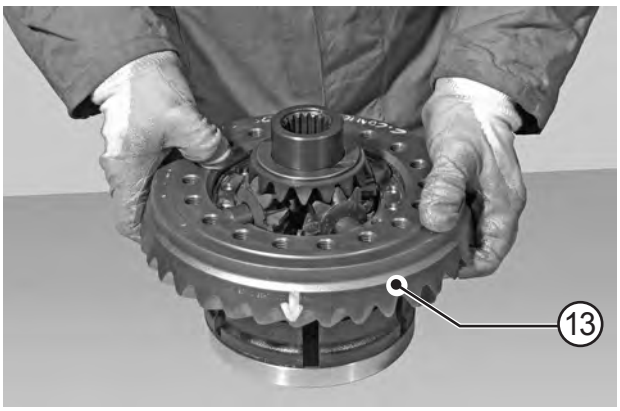

GB c

Install the crown wheel (13).

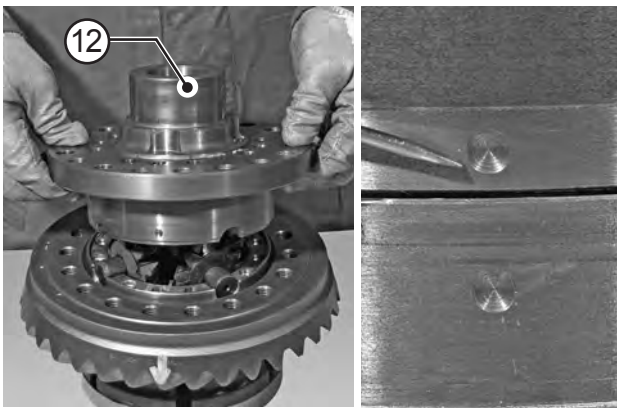

GB d

Mount the locking half-box (12) onto the half-box.
ATTENTION! The match marks on the two half-boxes must correspond.

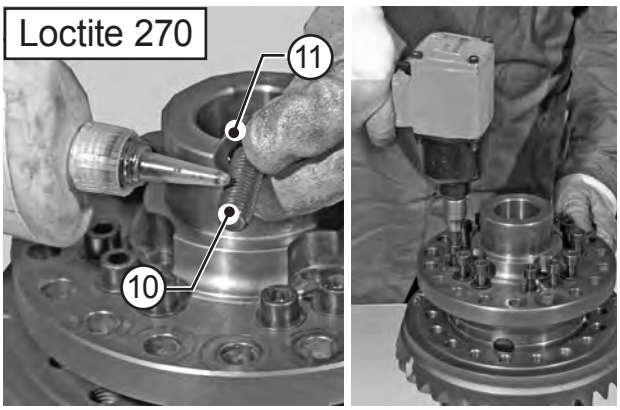

GB e

Coat the screws (10) with Loctite 270 together with washer (11) and screw them.
ATTENTION! Use only new screws.

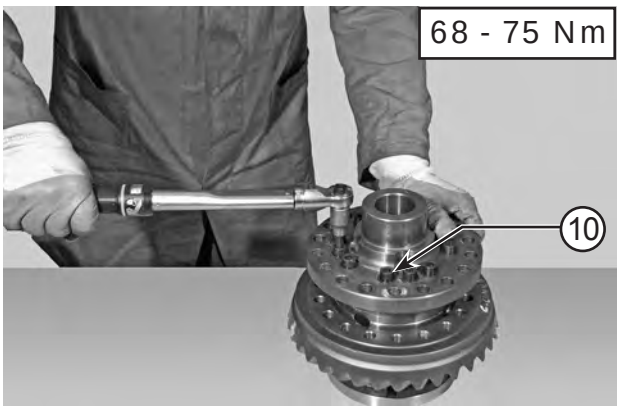

GB f

Tightening the screws (10) to a torque of 68 - 75 Nm.
Use the alternate and criss-cross tightening method.

a

I Inserire il dente antirotazione della rondella sferica (16) nell'apposita cava della semiscatola differenziale (12).

D Führen Sie den Feststellstift der sphärischen Zentrierscheibe (16) in die vorgesehene Nut des Differentialgehäuseteils ein (12).

E Meter el diente antirotación de la arandela esférica (16) en su ranura en la semicaja diferencial (12).

F Introduire la dent anti-rotation de la rondelle sphérique (16) dans la gorge prévue pour cela, située sur la demi-sphère du différentiel (12).

b

I Montare il planetario (15) completo di rondella di spallamento (14).

D Zentralzahnrad (15) zusammen mit der Bordscheibe montieren (14).

E Montar el planetaro (15) completo con anillo de adaptación (14).

F Monter le planétaire (15) complet de rondelle de support (14).

c

I Montare la corona (13).

D Zahnrad montieren (13).

E Montar la corona (13).

F Monter la couronne (13).

d

I Montare sulla semiscatola (12) la semiscatola di chiusura.
ATTENZIONE! Far coincidere i contrassegni delle due semiscatole.

D Auf das halbe Gehäuse (12) das halbe Verschlussgehäuse montieren.
ACHTUNG! Die Markierungen der beiden Gehäusehälften aufeinander legen.

E Montar sobre la semicaja (12) la semicaja de cierre.
ATENCION! Hacer coincidir los contrasignos de las dos semi-cajas.

F Monter sur le demi-boîtier (12) le demi-boîtier de fermeture.
ATTENTION! Faire coìncider les repères des deux demi-boîtiers.

e

I Spalmare le viti (10) con Loctite 270 ed avvitarle complete di rondelle (11).
ATTENZIONE! Usare solo viti nuove.

D Die Schrauben (10) mit Loctite 270 einschmieren und mit der Bordscheibe (11) festschrauben.
ACHTUNG! Nur neue Schrauben verwenden. Durch

E Untar los tornillos (10) con Loctite 270 y anillo de adaptación (11) atornillarlos.
ATENCION! Utilizar solo tornillos nuevos.

F Enduire les écrous (10) avec Loctite 270 puis et complet de rondelle de support (11) visser.
ATTENTION! Employer exclusivement des vis neuves.

f

I Bloccare serrando le viti (10) ad una coppia di 68 - 75 Nm.
Utilizzare il metodo di serraggio alternato ed incrociato.

D Festziehen der Schrauben (10) mit einem Anzugsmoment von 68 - 75 Nm blockieren. Die Schrauben abwechselnd und im Kreuz festziehen.

E Bloquear serrando los tornillos (10) a un par de 68 - 75 Nm.
Utilizando el metodo de serraje alternado y cruzado.

F Immobiliser en serrant les vis (10) au couple de 68 - 75 Nm.
Serrer les vis en diagonale.

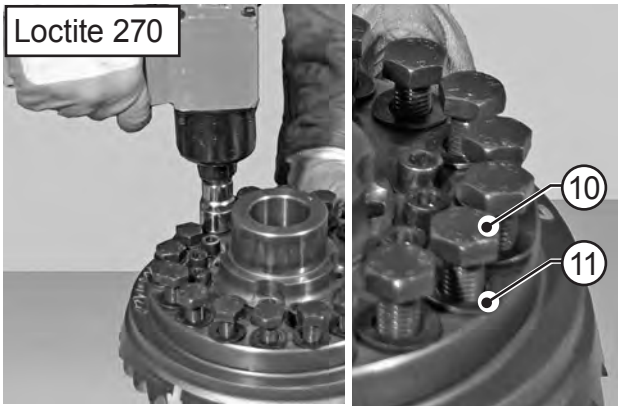

GB a

Coat the screws (7) with Loctite 270 together with washer (8) and screw them.
ATTENTION! Use only new screws.

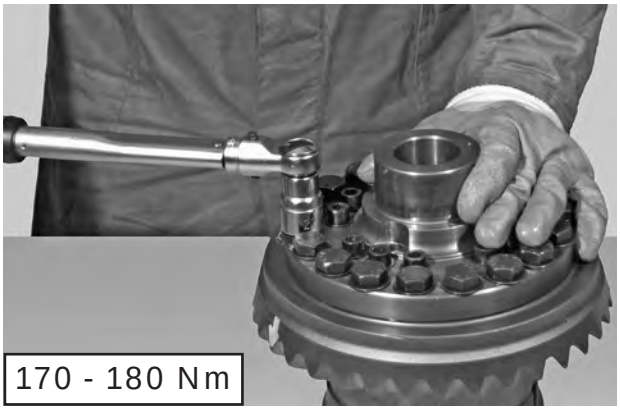

GB b

Lock the gear ring (13) by tightening the screws (7) to a torque of 170 - 180 Nm.
Use the alternate and criss-cross tightening method.

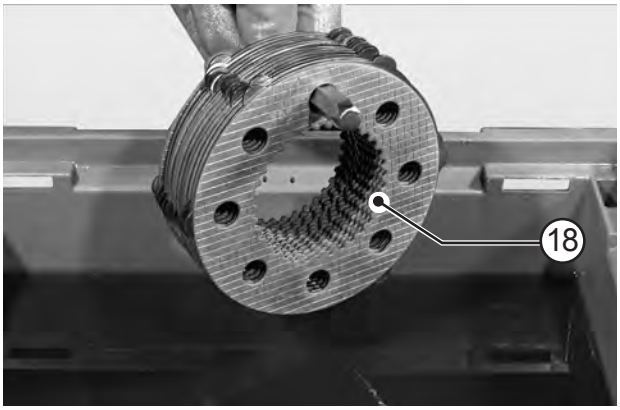

GB c

Immerse the clutch plate pack (18) in oil.

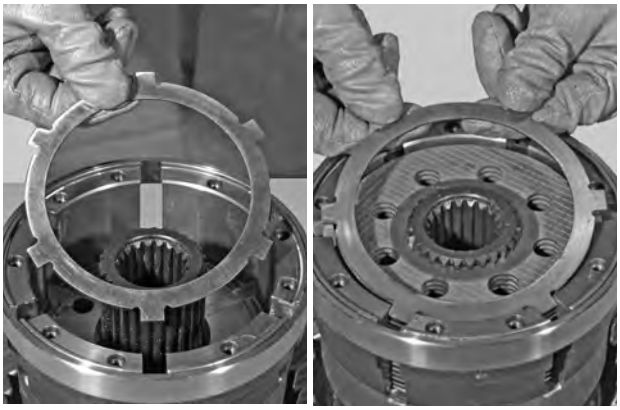

GB d

Insert and substitute, if necessary, the discs (18) of the differential lock.
ATTENTION: First and last disc have to be of steel.
NOTE. Align the lubrication ports.

GB e

Preload the spring (26).

GB f

Insert two screwdrivers into the special holes on the pressure plate sleeve to counteract the spring when installing the stop-ring. Assemble the snap ring (27) in it´s seat.

a

I Spalmare le viti (7) con Loctite 270 ed avvitarle complete di rondelle (8).
ATTENZIONE! Usare solo viti nuove.

D Die Schrauben (7) mit Loctite 270 einschmieren und mit der Bordscheibe (8) festschrauben.
ACHTUNG! Nur neue Schrauben verwenden. Durch

E Untar los tornillos (7) con Loctite 270 y anillo de adaptación (8) atornillarlos.
ATENCION! Utilizar solo tornillos nuevos.

F Enduire les écrous (7) avec Loctite 270 puis et complet de rondelle de support (8) visser.
ATTENTION! Employer exclusivement des vis neuves.

b

I Bloccare la corona (13) serrando le viti (7) ad una coppia di 170 - 180 Nm. Utilizzare il metodo di serraggio alternato ed incrociato.

D Den Kranz (13) durch Festziehen der Schrauben (7) mit einem Anzugsmoment von 170 - 180 Nm blockieren. Die Schrauben abwechselnd und im Kreuz festziehen.

E Bloquear la corona (13) serrando los tornillos (7) a un par de 170 - 180 Nm.
Utilizando el metodo de serraje alternado y cruzado.

F Immobiliser la couronne (13) en serrant les vis (7) au couple de 170 - 180 Nm.
Serrer les vis en diagonale.

c

I Immergere il pacco dischi frizione (18) a bagno d'olio.

D Das Kupplungsscheibenpaket (18) in ein Ölbad eintauchen.

E Sumergir el paquete discos fricción (18) en un baño de aceite.

F Plonger le groupe de disques d'embrayage (18) dans un bain d'huile.

d

I Inserire e sostituire se necessario i dischi bloccaggio differenziale (18).
ATTENZIONE: primo e ultimo disco in acciaio.
NOTA. Allineare i fori di lubrificazione.

D Die Lamellen (18) der Differentialsperre einsetzen und nötigenfalls ersetzen.
ACHTUNG: Erste und letzte Lamelle aus Stahl.
HINWEIS: Die Schmieröffnungen fluchten.

E Poner y substituir si fuese necesario, los discos que blocan el diferencial (18).
ATENCION: El primer y el ultimo disco deben ser de acero.
NOTA. Alinear los orificios de lubrificación.

F Insérer et remplacer si nécessaire les disques blocage différentiel (18).
ATTENTION: premier et dernier disque en acier.
REMARQUE : Aligner les trous de lubrification.

e

I Assemblare il manicotto spingidisco (20) nel coperchio differenziale (21) ed inserire la molla di ritorno del pistone (26).

Precaricare la molla (26).

D Die Feder (26) vorspannen.

E Comprimir el resorte (26).

F Precharger le ressort (26).

f

I Inserire due cacciaviti negli appositi fori sul manicotto spingidisco per contrastare la molla al momento dell'installazione dell'anello di fermo.
Montare l'anello elastico (27) in sede.

D Führen Sie beim Anbringen des Feststellrings zwei Schraubenzieher in die entsprechenden Bohrungen an der Muffe der Kupplungsscheibe ein, um so der Feder entgegenzuwirken.
Den Spannring (27) in seine Nut einsetzen.

E Meter dos destornilladores en los agujeros del manguito empuja-disco para retener el muelle cuando se instala el anillo de retén.
Montar el anillo elástico (27) en sede.

F Introduire deux tournevis adéquats dans les trous prévus pour cela sur le manchon plateau d'embrayage pour maîtriser le ressort au moment de la mise en place de l'anneau de blocage.
Monter la bague élastique (27) en siège.

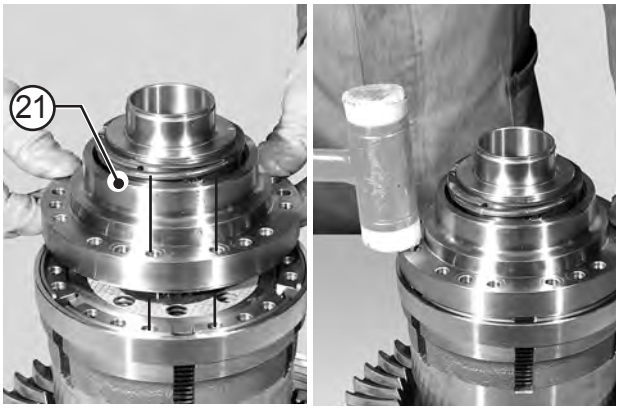

GB a

Fit the differential case cover (21).
NOTE: Align the holes for the screws.

GB b

Coat the screws (23) with Loctite 270 together with washer (22) and screw them.
Tightening the screws (23) to a torque of 40 - 50 Nm.
Use the alternate and criss-cross tightening method.

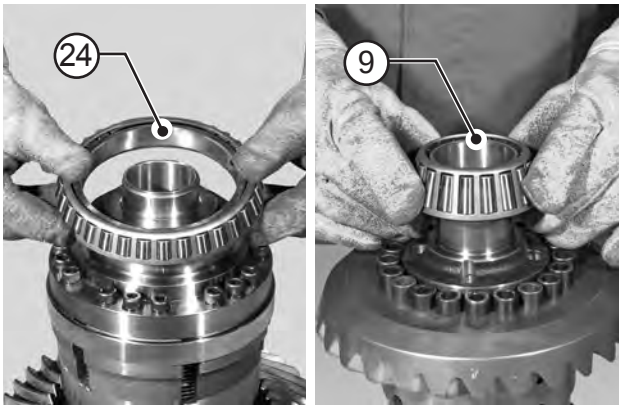

GB c

Heat the bearings (9)(24) to about 100 C° and fit it to the differential box.
NOTE: Once the bearing has cooled down, lightly lubricate bearing (9)(24) with SAE85W90 oil.

GB d

Fit the thrust bearing disc (28).
Tap lightly with a mallet to seat completely.
NOTE: Accurately check the orientation.

GB e

Insert thrust bearing (28) and O-ring (29).
CAUTION! Install and check that the O-ring is in good condition and in position.

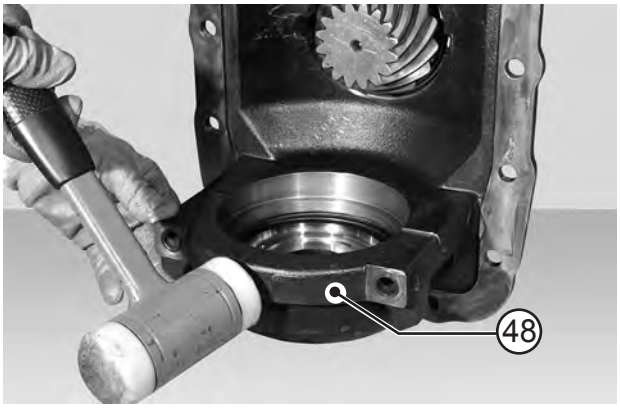

GB f

Install the differential support (48).
NOTE: Check to be at end of stroke.

a

I Montare il coperchio scatola differenziale (21).
NOTA: Allineare i fori delle viti.

D Den Differentialdeckel (21) montieren.
HINWEIS: Die Öffnungen der Schrauben fluchten.

E Montar la cubierta caja diferencial (21).
NOTA. Alinear los orificios de los tornillos.

F Monter le couvercle de la boîte du différentiel (21).
REMARQUE Aligner les trous des vis.

b

I Spalmare le viti (23) con Loctite 270 ed avvitarle complete di rondelle (22).
Bloccare serrando le viti (23) ad una coppia di 40 - 50 Nm. Utilizzare il metodo di serraggio alternato ed incrociato.

D Die Schrauben (23) mit Loctite 270 einschmieren und mit der Bordscheibe (22) festschrauben.
Festziehen der Schrauben (23) mit einem Anzugsmoment von 40 - 50 Nm blockieren. Die Schrauben abwechselnd und im Kreuz festziehen.

E Untar los tornillos (23) con Loctite 270 y anillo de adaptación (22) atornillarlos.
Bloquear serrando los tornillos (23) a un par de 40 - 50 Nm. Utilizando el metodo de serraje alternado y cruzado.

F Enduire les écrous (23) avec Loctite 270 puis et complet de rondelle de support (22) visser.Immobiliser en serrant les vis (23) au couple de 40 - 50 Nm.
Serrer les vis en diagonale.

c

I Scaldare a circa 100 C° i cuscinetti (9)(24) e montarli sul differenziale.
NOTA: Dopo il raffreddamento, lubrificare leggermente i cuscinetti con olio SAE 85W90.

D Das Lager (9)(24) auf ca. 100 C° erhitzen und auf das Differential montieren.
HINWEIS: Nach dem Abkühlen, das Lager mit etwas SAE 85W90 schmieren.

E Calentar a 100 C° approx el cojinetes (9)(24) y montarlo sobre el diferencial.
NOTA. Despues del enfriamiento, lubrificar ligermente el cojinete con aceite SAE 85W90.

F Calentar a 100 C° approx el cojinete (9)(24) y montarlo sobre el différentiel.
REMARQUE. Despues del enfriamiento, lubrificar ligermente el cojinete con aceite SAE 85W90.

d

I Montare la ralla del cuscinetto reggispinta (28).
Con leggeri colpi di mazzuolo verificare che sia a fondo corsa.
NOTA: Controllare attentamente l'orientamento.

D Den Lagerkäfig des Axiallagers (28) montieren.
Mit leichten Hammerschlägen sicherstellen, dass er bis zum Anschlag eingesetzt wurde.
HINWEIS: Die Position sorgfältig kontrollieren.

E Montar la rangua del cojinete de tope (28). Con ligeros golpes de martillo, verificar que esté a final de carrera.
NOTA. Controlar atentamente la orientación.

F Monter la rondelle de butée du palier de butée (28).
Avec de légers coups de maillet en matière plastique contrôler qu'elle aille en butée.
REMARQUE Contrôler attentivement le sens.

e

I Inserire cuscinetto reggispinta (28) e anello OR (29).
ATTENZIONE! Installare e controllare lo stato e la posizione della guarnizione OR.

D Drucklager (28) und O-ring einsetzen (29).
ACHTUNG! Den Zustand und die Position des ORinges montieren und kontrollieren.

E Poner el rodamiento que regula el empuje (28) y el anillo OR (29).
CUIDADO! Montar y controlar el estado y la posiciòn de la junta OR .

F Insérer palier de butée (28) et bague OR (29).
ATTENTION! Monter et contròler l'état et la position de la garniture OR.

f

I Montare il supporto differenziale (48).
NOTE: Assicurarsi che siano in battuta.

D Das Ausgleichsgetriebe montieren (48).
HINWEIS: Darauf achten, daß sie am Anschlag anliegen.

E Monter el soporte (48).
NOTA: Asegurarse que esten bien a fondo.

F Introduir le support (48).
NOTE: s'assurer che les épaisseurs soivent en butée.

GB a

SETTING OF THE CROWN WHEEL AND PINION
Insert the thrust block of the bearing (45) opposit side of the crown wheel first step shims .

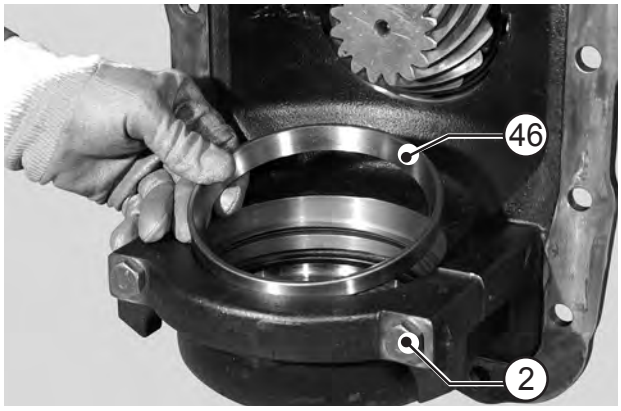

GB b

Position the screws (2) and lightly tighten.
Insert the thrust block and the shims (46) into the differential support.
NOTE: Check to be at end of stroke.

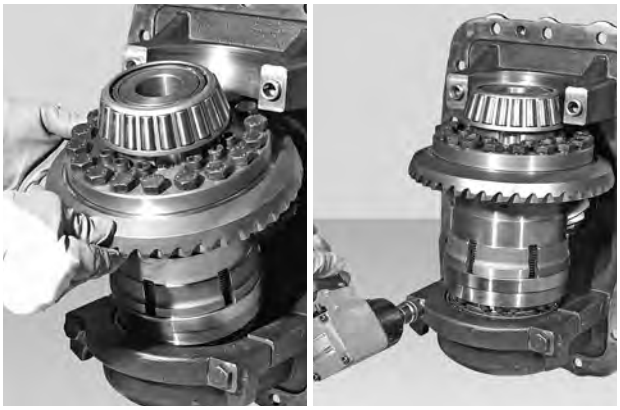

GB c

Install the whole differential unit.

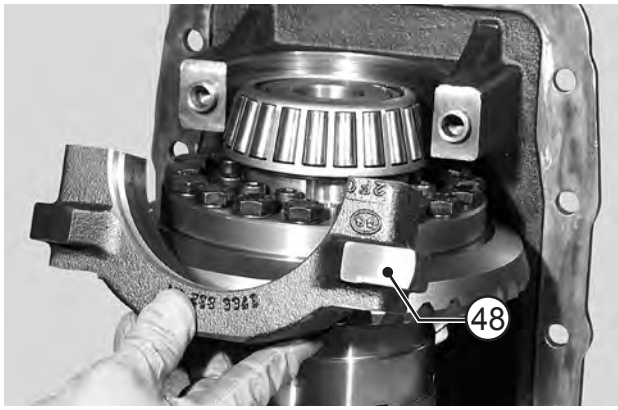

GB d

Install the differential support (48) and bearing thrust block (9).

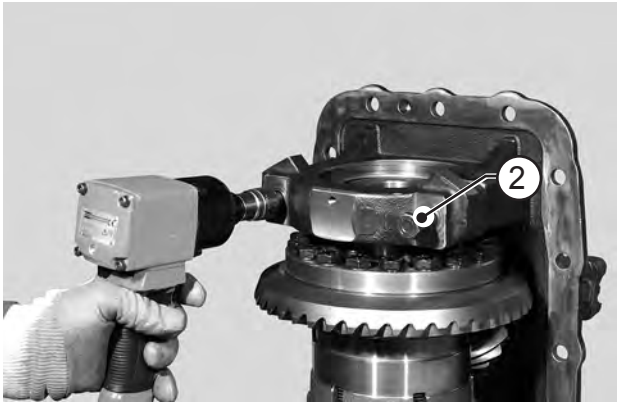

GB e

Position the screws (2) and lightly tighten.

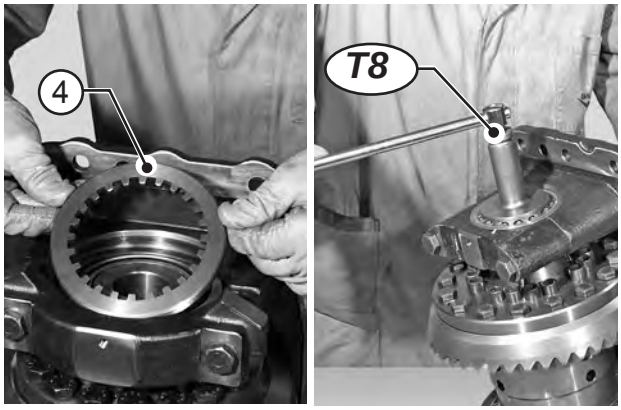

GB f

Use special tool T8, tighten ring nut (4) on the crown side and adjust carefully.

a

I **REGISTRAZIONE COPPIA CONICA**
Inserire sotto la ralla del cuscinetto lato opposto (45) corona una quantità di spessori iniziali.

D **EINSTELLUNG DES ACHSGETRIEBES**
Insert the thrust block of the bearing (45) opposit side of the crown wheel firt step shims

E **REGISTRACIÓN DEL PAR CONICO**
Poner detras del retén del rodamiento del lado opuesto a la corona (45), espesores de prima instalación.

F **RÉGLAGE COUPLE CONIQUE**
Inserer sous la butée du palier (45) de coté opposé couronne des épaisseurs de première étape.

b

I Montare le viti (2) e serrarle leggermente.
Montare la ralla e gli spessori (46) nel supporto differenziale.
NOTE: Assicurarsi che siano in battuta.

D Die Schrauben (2) anbringen und leicht zuschrauben.
Anlaufscheibe und Unterlegscheiben (46) im Ausgleichsgetriebe montieren.
HINWEIS: Darauf achten, daß sie am Anschlag anliegen.

E Montar los tornillos (2) y apretarlos ligeramente.
Montar el retén y los espesores (46) en el soporte.
NOTA: Asegurarse que esten bien a fondo.

F Monter les vis (2) et serrer légèrement.
Monter la butée et les épaisseurs (46) dans le support .
NOTE: s'assurer che les épaisseurs soivent en butée.

c

I Inserire il gruppo differenziale completo.

D Das komplette Differentialaggregat montieren.

E Montar el grupo diferencial completo.

F Monter le groupe differentiel tout entier.

d

I Montare il supporti differenziale (48) e la ralla del cuscinetto (9).

D Das Ausgleichsgetriebe (48) un Lager (9) montieren.

E Monter el soporte (48) y la rangua del cojinette (9).

F Introduir le support (48) la crapudine du palier (9).

e

I Montare le viti (2) e serrarle leggermente.

D Die Schrauben (2) anbringen und leicht zuschrauben.

E Montar los tornillos (2) y apretarlos ligeramente.

F Monter les vis (2) et serrer légèrement.

f

I Utilizzando l'attrezzo speciale T8, serrare la ghiera (4) dal lato corona ed assestare accuratamente.

D Mit dem Spezialwerkzeug T8, die Nutmutter (4) sorgfältig ausrichten.

E Con la ayuda de la herramienta especial T8, apretar las virolas (4) del lado corona hastat arreglar.

F À l'aide de l'outil spécial T8, serrer les anneaux de fixation (4) du côté couronne et arranger soigneusement.

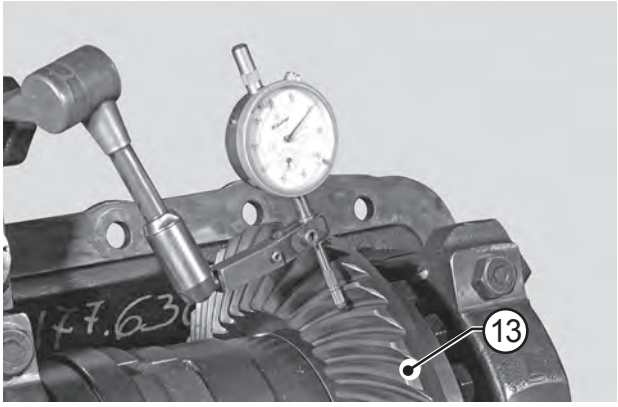

GB a

Position the comparator on the centre of one of the teeth of the crown (13), pre-set it to 1mm and reset it.

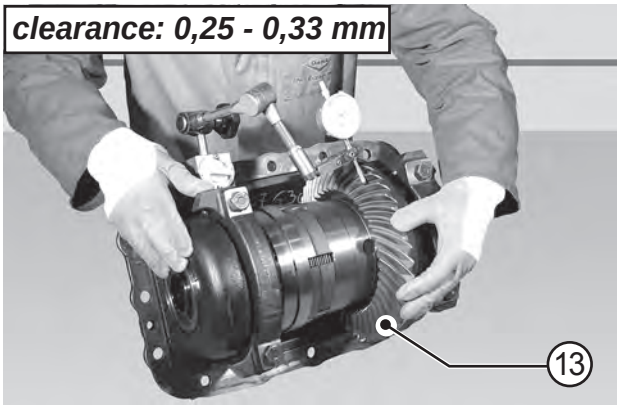

GB b

Manually move the crown (13) in both directions in order to check the existing backlash between the pinion and the crown.

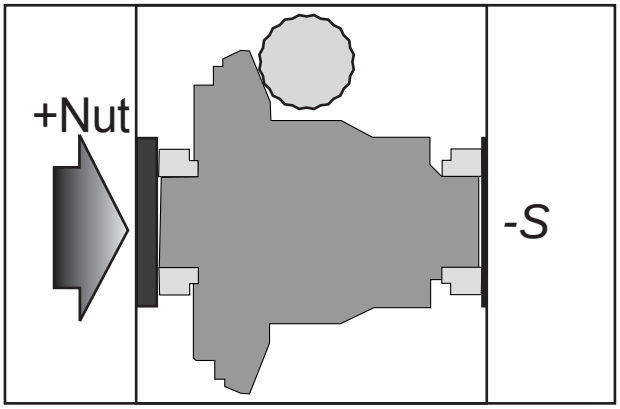

GB c

- Shims (25) / +Nut (4) = reduction clearance crown and pinion

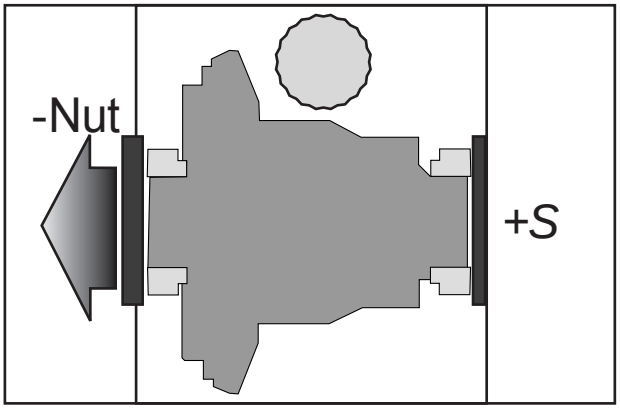

GB d

+ Shims (25) - Nut (4) = increase clearance crown and pinion

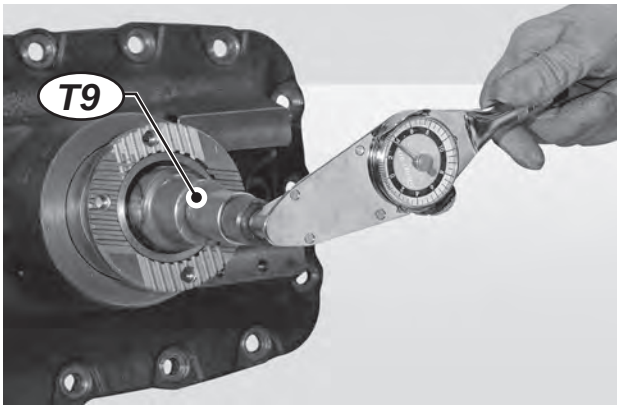

GB e

Apply onto the pinion the bar-hold T9 and with the help of a torque metre, check the torque.

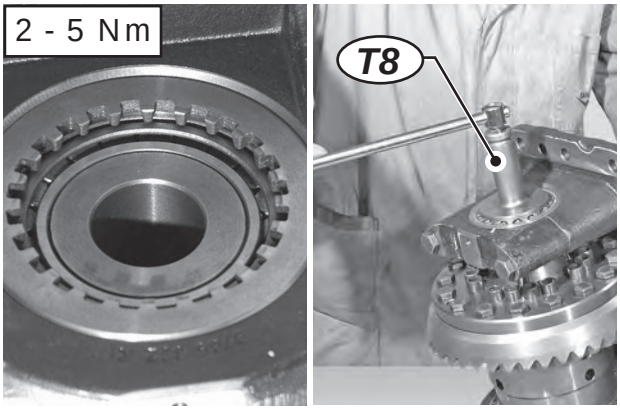

GB f

Apply onto the pinion (12) the bar-hold T9 and with the help of a torque metre and check that torque will increase by **0,5 - 1,0 Nm** as a result of differential bearing preload. Example: pinion torque: 2 - 4 Nm
Pinion + differential torque: 2,5 - 5 Nm.
CAUTION! If bearings are not new, check the static torque; if bearings are new, check the continuous torque.

a

I Posizionare un comparatore a tasto orientabile. Posizionarlo sul centro di un dente della corona (13), precaricarlo di circa 1 mm ed azzerarlo.

D Durch das eine schwenkbare Meßuhr. in der Mitte eine Kranzzahnes (13) anbringen. Die Meßuhr auf 1 mm vorladen und auf Null stellen.

E Posicionar un comparador de tecla orientable. Posicionarlo en el centro de un diente de la corona (13), precargarlo de aproximadamente 1 mm y ponerlo a cero.

F Placer un comparateur à touche orientable. Placer ce dernier au centre d'une dent de la couronne (13), précharger d'environ 1 mm, puis le mettre à zéro.

b

I Muovere manualmente nei due sensi la corona (13) per controllare il gioco esistente tra pignone e corona.

D Den Kranz(13)von Handin beideRichtungen bewegen und das Spiel zwischen Rad und Kranz prüfen.

E Mover manualmente en los dos sentidos la corona (13) para controlar el juego que hay entre el pinõn y la corona.

F Dè placer la couronne (13) manuellement dans les deux sens pour contròler le jeu existant entre pignon et couronne.

e

I Applicare sul pignone la chiave e con un torsiometro T9, controllare la coppia di rotazione.

D Den Shaft T9 montieren auf das Rad und mit einem Drehungsmesser das Drehmoment kontrollieren.

E Aplicar el mango T9 en el piniòn y con un torsiòmetro, controlar el par de rotaciòn.

F Appliquer la queue T9 sur le pignon et l'aide d'un torsiométre, contròler le couple de rotation.

f

I Applicare sul pignone (12) la chiave T9 e con un torsiometro, e controllare che la coppia di rotazione subisca un incremento di **0,5 - 1,0 Nm** dovuto al precarico dei cuscinetti del differenziale.
Esempio: Coppia pignone: 2 - 4 Nm
Coppia pignone + differenziale: 2,5 - 5 Nm
ATTENZIONE! Con cuscinetti usati, controllare la coppia di spunto;con cuscinetti nuovi, controllare la coppia di rotazione continua.

D Den Shaft T9 montieren auf das Rad (12) und kontrollieren, ob das Anzugsmoment durch die Vorbelastung der Differentiallager um **0,5 - 1,0 Nm** erhöht wird. Beispiel:,Anzugsmoment des Rads: 2 - 4 Nm Radpaar + Differential: 2,5 - 5 Nm
ACHTUNG! Bei verbrauchten Lagern, das Anlaufdrehmoment kontrollieren; bei neuen Lagern, das kontinuierliche Drehmoment kontrollieren.

E Aplicar el mango en el piniòn (12) y con un torsiòmetro y controlar que el par de rotaciòn tenga un incremento de **0,5 - 1,0 Nm** debido al la pre-carga de los cojinetes del diferencial.
Exemplo: Par pinon: 2 - 4 Nm Par pinon + diferencial: 2,5 - 5 Nm
CUIDADO! Con cojinetes usados, controlar el par de inicio, con cojinetes nuevos, controlar el par de rotaciòn continua.

F Appliquer la queue sur le pignon (12) et l'aide d'un torsiométre et contrôler que le couple de rotation subit un accroissement de **0,5 - 1,0 Nm** à la précharge des roulements du différentiel.
Exemple: Couple pignon: 2 - 4 Nm
Couple pignon + différentiel: 2,5 - 5 Nm
ATTENTION! Avec les paliers usè s, contròler le couple de pointe; avec les paliers neufs, contròler le couple de rotation continu.

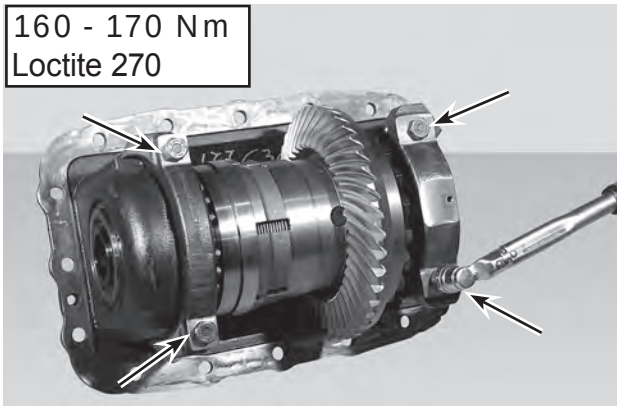

GB a

REMOVE ONE SCREW AT TIME
Apply Loctite 270 on the threaded portion of screws (2) and fix. Tighten screws to a torque of 160 - 170 Nm.

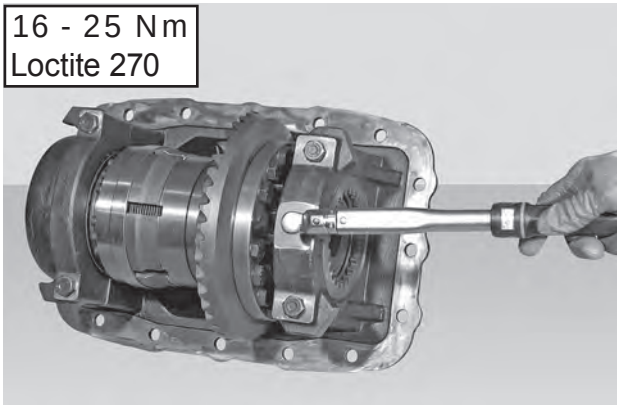

GB b

Install in correct position the safety plate (5).
Engage screw (6) in the slot to the holes provided for the check screws. Coat screws with Loctite 270 and tighten.
Tighten screw to a torque of 16 - 25 Nm.

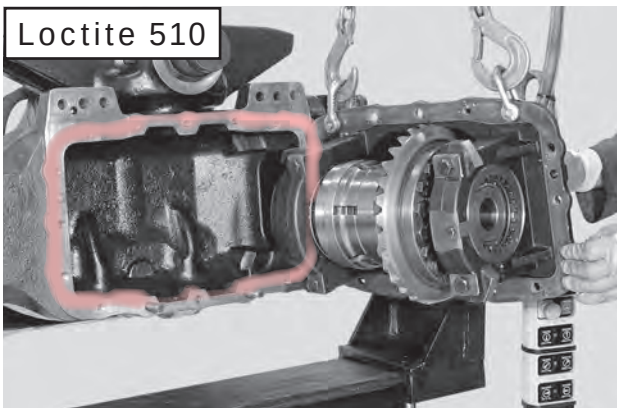

GB c

Tighten two safety studs ***"A"*** in the main body to avoid falling of the bevel gear pair. Coat the machined contact surface of the main body with Loctite 510 and install the support (45).
NOTE. Make sure that a continuous layer of sealant runs around the locking holes.

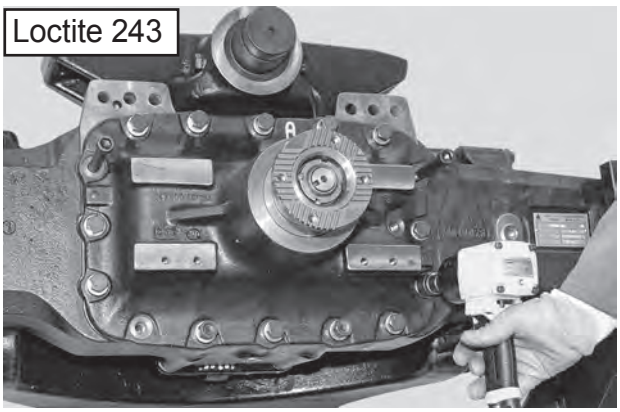

GB d

Coat the screws (42) with Loctite 243 together with washer (41) and screw them.

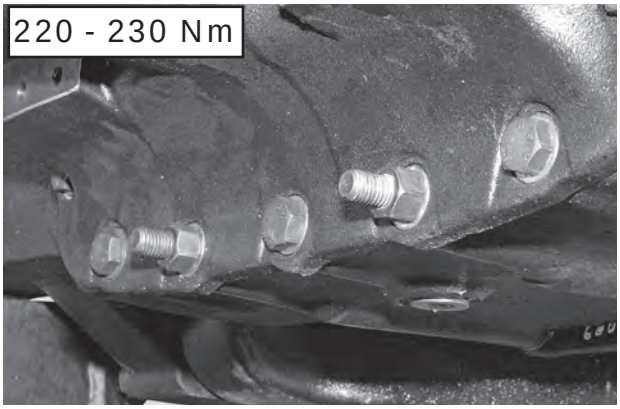

GB e

Tightening torque of 220 - 230 Nm.

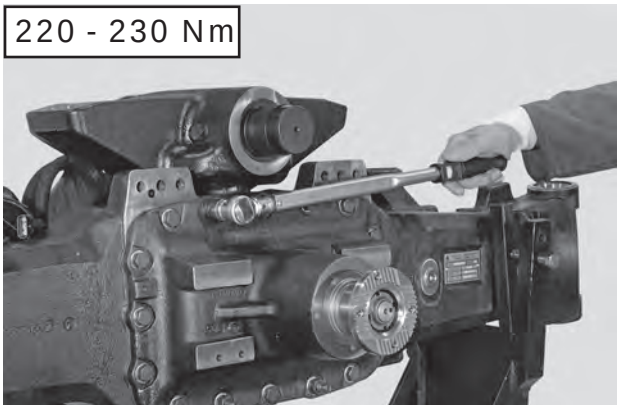

GB f

Using the criss-cross method and a tightening torque of 220 - 230 Nm.

a

I **RIMUOVERE LE VITI UNA ALLA VOLTA**
Spalmare la porzione fi lettata delle viti (2) con Loctite 270 e fissare
Serrare le viti alla coppia di 160 - 170 Nm.

D **LÖSCHEN SIE EINE SCHRAUBE ZUR ZEIT**
Die Schrauben (2) mit Loctite 270 schmieren und in eines der beiden vorgesehenen Löcher schrauben.
Anzugsmomente der Schrauben 160 - 170 Nm.

E **QUITE UN TORNILLO EN EL TIEMPO**
Pasar Loctite 270 en los tornillos (2) y atornillarlos en uno de los dos orifi cios predispuestos.
Apretar los tornillos al par de 160 - 170 Nm.

F **RETIREZ UNE VIS AU TEMPS**
Enduire les vis (2) avec du Loctite 270, puis visser celles-ci dans l'un des deux trous prèdisposès.
Serrer les vis au couple de 160 - 170 Nm.

b

I Installare nella corretta posizione la piastrina di sicurezza (2).Montare le viti avvitandole nel foro di fissaggio.
Spalmare le viti con Loctite 270 e serrarle.
Serrare le viti alla coppia di 16 - 25 Nm.

D Sicherungsplättchen an der richtigen Stelle anbringen (2).Die Halterungen der Nutmuttern montieren.
Die Schrauben mit Loctite 270 schmieren und fest-ziehen.
Anzugsmomente der Schrauben 16 - 25 Nm.

E Instalar en la posición correcta la plancha de seguridad (2).Montar los virolas empleandolos en la ranura de fisaje.
Pasar los tornillos con Loctite 270 y apretarlas.
Apretar los tornillo al par de 16 - 25 Nm.

F Monter les rondelles de butée pour les couronnes en les engageant dans l'encoche pour les vis de fixation.
Enduire les vis de Loctite 270 et les serrer.
Serrer le vis au couple de 16 - 25 Nm.

c

I Avvitare nel corpo centrale due prigionieri ***"A"*** di sicurezza per evitare la caduta della supportazione coppia conica. Spalmare la superficie di contatto del corpo centrale con Loctite 510 ed installare il coperchio (45).
NOTA. Assicurarsi che il sigillante crei un velo continuo attorno ai fori di fissaggio.

D In den zentralen Körper zwei Stiftschrauben ***"A"***, um das Herunterfallen der Befestigung des Kegelräderpaars zu vermeiden.Die Spiegelfläche des Zentralkörpers mit Loctite 510 schmieren und den Deckel (45) installieren.
BEMERKUNG. Sicherstellen, daß die Dichtmasse einen Film um die Befestigungslöcher herum bildet.

E Atornillar en el cuerpo dos prigionieros ***"A"*** de seguridad para evitar que caiga el soporte del par cónico. Pasar la superficie de contacto del cuerpo central con Loctite 510 y instalar la tapa (45).
NOTA. Asegurarse que el sigilante cree una pelicula continua alrededor a los agujeros de fisaje.

F Dans le corps central, serrer deux goujons ***"A"*** de sécurité pour éviter la chute du support du couple conique. Enduire la superficie de contact du corps central avec du Loctite 510, installer le couvercle (45).
REMARQUE. S'assurer que la couche de colle entoure bien les trous de fixation.

d

I Spalmare le viti (42) con Loctite 243 ed avvitarle complete di rondelle (41).

D Die Schrauben (42) mit Loctite 243 einschmieren und mit der Bordscheibe (41) festschrauben.

E Untar los tornillos (42) con Loctite 243 y anillo de adaptación (41) atornillarlos.

F Enduire les écrous (42) avec Loctite 243 puis et complet de rondelle de support (41) visser.

e

I Serrare i dadi ad una coppia di serraggio di 220 - 230 Nm.

D Anzugsmoment von 220 - 230 Nm festziehen.

E Par de torsion de 220 - 230 Nm.

F Couple de serrage de 220 - 230 Nm.

f

I Serrare le viti (9) con il metodo incrociato ad una coppia di serraggio di 220 - 230 Nm.

D Die Schrauben (38) im Kreuz mit einem Anzugsmoment von 220 - 230 Nm festziehen.

E Serrer les vis (9) avec la méthode croisée à un couple de serrage de 220 - 230 Nm.

F Apretar los tornillos (9) con el metodo cruzado y un par de torsion de 220 - 230 Nm.

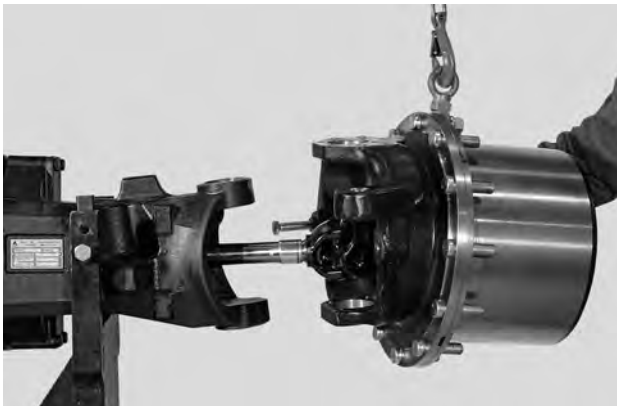

GB a

Pay attention don't damage the dust cover rings and the sealing rings. Install the steering case.
For details, see: HOW TO ASSEMBLE THE COMPLETE STEERING CASE.

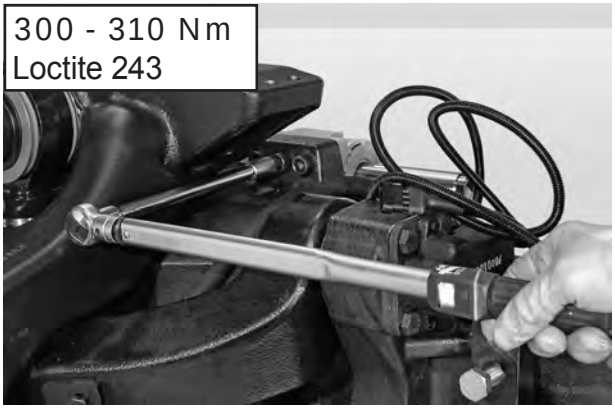

GB b

Fit the steering cylinder into its seat.
Lock the cylinder by cross- tightening the screws .
Torque wrench setting: 300 - 310 Nm
For details, see: HOW TO ASSEMBLY THE STEERING CYLINDER

GB c

Secure the valve assembly.
For details, see: ASSEMBLING AND INSTALLING THE CONTROL VALVE

a

I Prestare molta attenzione per non danneggiare gli anelli parapolvere e di tenuta.
Installare la scatola snodo.Per i dettagli, vedere: MONTAGGIO SCATOLA SNODO COMPLETA.

D Vorsicht: Staubschutzringe und Dichtungsringe nicht beschädigen.
Das Gelenkgehäuse-Aggregat montieren.Weitere Einzelheiten im Paragraph: KOMPLETTES GELENKGEHÄUSE MONTIEREN.

E Tener mucho cuidado a fin de no danàr los segmentos de protecciòn.Montar el grupo caja de ròtula.Para los detalles, vease: MONTAJE CARTER DE ROTULA COMPLETO.

F Faire très attention à ne pas abîmer les bagues anti-poussiére et d'étanchéitè .
Monter le groupe du boõtier articulation.
Pour tout détail, voir: MONTAGE DU BOITIER ARTICULATION COMPLET.

b

I Montare in sede il cilindro di sterzatura .
Bloccare il cilindro con le viti serrate con il metodo incrociato.
Coppia di serraggio: 300 - 310 Nm
Per i dettagli, vedere: ASSEMBLAGGIO CILINDRO DI STERZATURA

D Den Lenkzylinder in seinen Sitz montieren.
Zylinder mit den Schrauben blockieren; dabei die Schrauben entgegengesetzt und abwechselnd fest-schrauben. Anzugsmoment 300 - 310 Nm
Einzelheiten im Paragraph: LENKZYLINDER MONTIEREN

E Montar en el alojamiento el cilindro de direcciòn .
Bloquear el cilindro con los tornillos apretados con el mètodo cruzado. Par de torsiòn: 300 - 310 Nm
Para los detalles, vease: MONTAJE CILINDRO DE DIRECCION

F Monter le logement du cylindre de braquage .
Bloquer le cylindre à l'aide des vis serrès par le biais du mode croisé. Couple de serrage: 300 - 310 Nm
Pour tout détail, voir: ASSEMBLAGE DU CYLINDRE DE BRAQUAGE

c

I Fissare il gruppo valvole.
Per i dettagli, vedere: ASSEMBLAGGIO E INSTALLAZIONE VALVOLA DI CONTROLLO

D Fixieren Sie das Ventilaggregat.
Einzelheiten im Paragraph: MONTAGE UND EINBAU DES KONTROLLVENTILS

E Fijar el grupo de válvulas.
Para los detalles, vease: ENSAMBLAJE E INSTALACIÓN VÁLVULA DE CONTROL

F Fixer le groupe de soupapes.
Pour tout détail, voir: ASSEMBLAGE ET MISE EN PLACE DE LA SOUPAPE DE CONTRÔLE

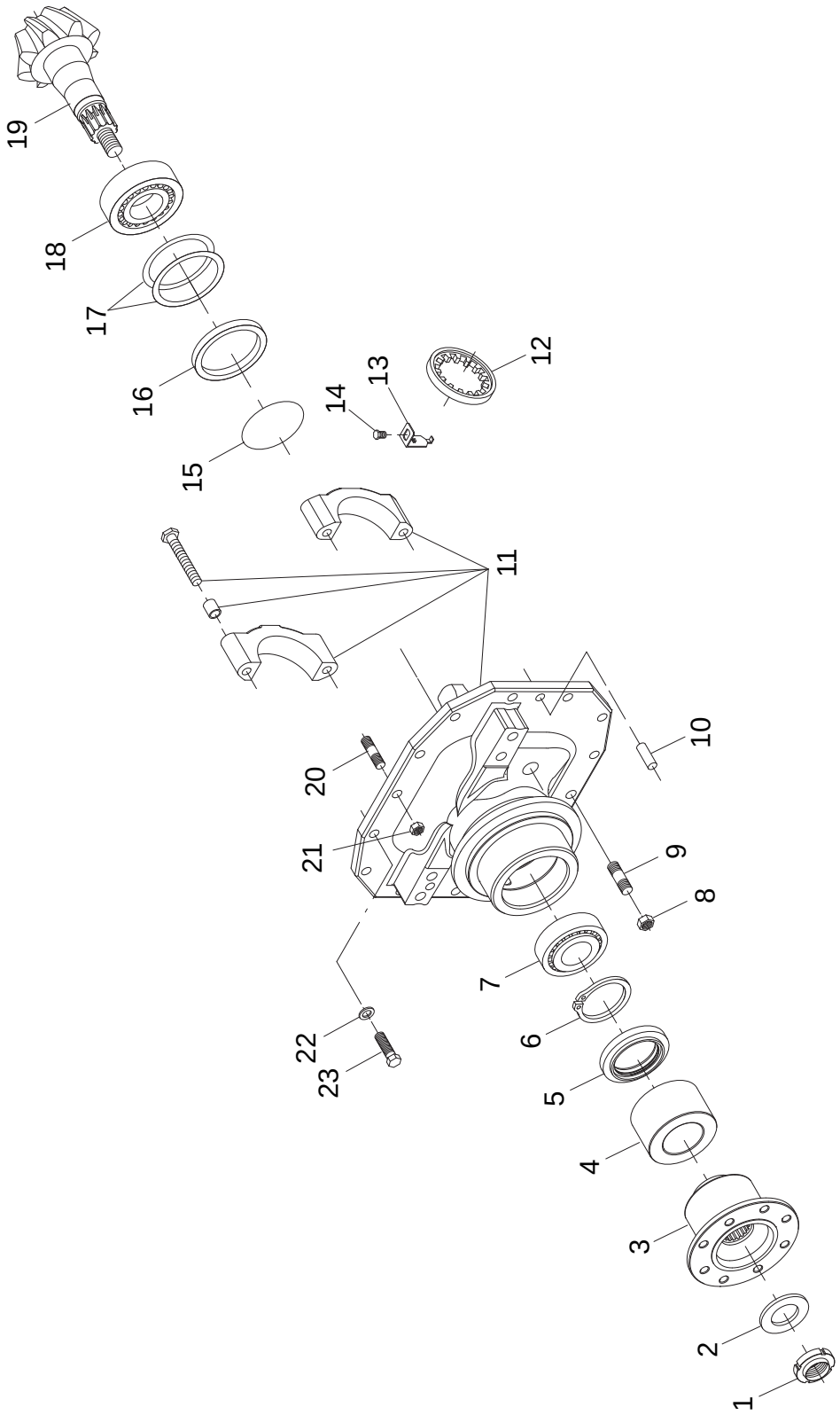
19
18
17
16
15
14
13
12
11
20
21
22
23
10
9
8
7
6
5
4
3
2
1

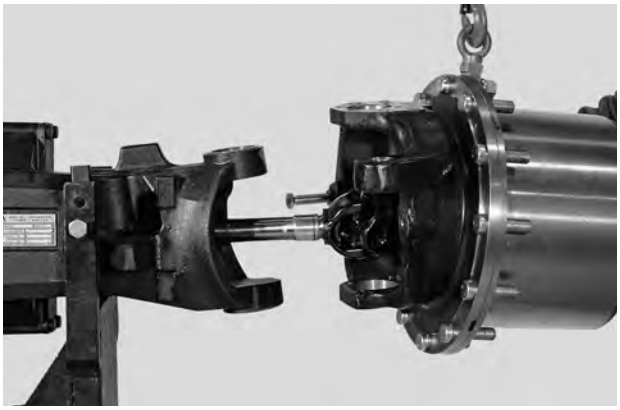

GB a

Remove the complete steering case.
For details, see: HOW TO REMOVE THE COMPLETE STEERING CASE.

GB b

Remove the securing screws from the steering cylinder.
For details, see: HOW TO DISASSEMBLY THE STEERING CYLINDER

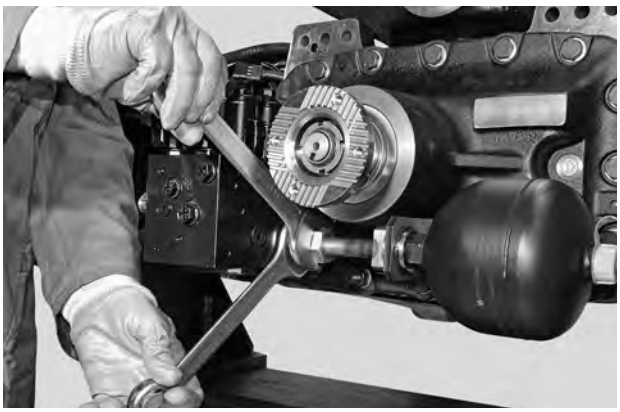

GB c

Loosen and remove the valve assembly retainer screws.
Remove the valve assembly.
For details, see: REMOVING THE CONTROL VALVE

GB d

Remove the calking in order to preserve the screw cutting of the pinion during the ring nut (1) removal.

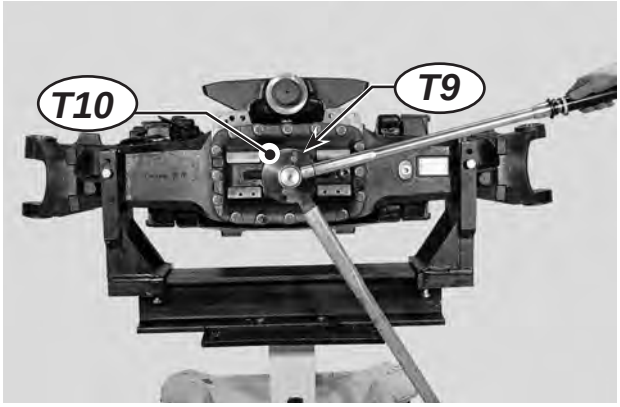

GB e

Position wrench T9 onto the ring nut (1) and apply bar hold to the flange (3). Stop wrench T10 and rotate the nut to release it.
NOTE. If disassembly proves awkward, weld the ring nut at approx.80°.

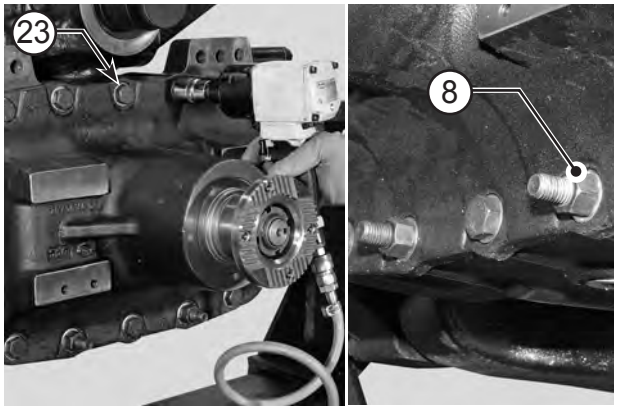

GB f

Unloose and remove the fittin screws (23), nuts (8) and relative washers (6) from the differential support (11).

a

I Rimuovere il gruppo snodo completo.
Per i dettagli, vedere: RIMOZIONE SCATOLA SNODO COMPLETA.

D Komplettes Gelenkaggregat abnehmen.
Weitere Einzelheiten im Paragraph: KOMPLETTES GELENKGEHÄUSE ABMONTIEREN.

E Remover el grupo ròtula completo.
Para los detalles, vease: REMOCION CARTER DE ROTULA COMPLETO.

F Enlever le groupe d'articulation complet.
Pour tout détail, voir: DEPOSE DU BOITIER ARTICULATION COMPLET.

b

I Asportare le viti di fissaggio del cilindro di sterzatura.
Per i dettagli, vedere: SMONTAGGIO CILINDRO DI STERZATURA

D Die Befestigungsschrauben des Lenkzylinders abnehmen.
Einzelheiten im Paragraph: LENKZYLINDER ABMONTIEREN

E Sacar los tornillos que fijan el cilindro de direcciòn .
Para los detalles, vease: DESMONTAJE CILINDRO DE DIRECCION

F Enlever les vis de fixation du cylindre de braquage.
Pour tout détail, voir: DEMONTAGE DU CYLINDRE DE BRAQUAGE

c

I Allentare e rimuovere le viti di fissaggio del gruppo valvole.
Rimuovere il gruppo valvole.
Per i dettagli, vedere: RIMOZIONE VALVOLA DI CONTROLLO

D Lösen Sie die Befestigungsschrauben des Venitlaggregats und nehmen Sie diese ab.
Entfernen Sie das Ventilaggregat.
Einzelheiten im Paragraph: ENTFERNEN DES KONTROLLVENTILS

E Aflojar y quitar los tornillos de fijación del grupo de válvulas.
Sacar el grupo de válvulas.
Para los detalles, vease: EXTRACCIÓN VÁLVULA DE CONTROL

F Desserrer et enlever les vis de retenue du groupe de soupapes.
Enlever le groupe de soupapes.
Pour tout détail, voir: EXTRACTION DE LA SOUPAPE DE CONTRÔLE

d

I Rimuovere totalmente la cianfrinatura, onde evitare lo sfilettamento del pignone durante la rimozione della ghiera (1).

D Die Verstemmung richtig entfernen, um während der Beseitigung der Nutmutter (1) des Kegelrad nicht zu beschädigen.

E Sacar totalmente la mellatura para evitar que se dañen las roscas del piñón cuando se sacan la virola (1).

F Enlever entièrement la clouage pour ne pas abîmer le filetage du bras pendant l'enlevement du collier de serrage (1).

e

I Impegnare la chiave speciale T9 sulla ghiera (1) ed applicare sulla flangia (3) la chiave speciale T10 .
Fermare la chiave T10 e ruotare la ghiera per allentarla.
NOTA. Se lo smontaggio risulta faticoso, scaldare la ghiera a circa 80°C.

D Den speziellen Schlüssel T9 in die Nutmutter (1) setzen und Flansch (12) den speziellen Schlüssel T10 anbringen.
Schlüssel T10 festhalten und Flansch drehen zu lockern.
BEMERKUNG. Falls die Nutmutter zu fest sitzt, diese auf ca. 80°C erhitzen.

E Bloquear la llave especial T9 en la virola (1) y aplicar en el brida (12) la llave especial T10 .
Bloquear la llave T10 y girar la virola para aflojar.
NOTA. Si el desmontaje resulta difícil, calentar la virola a unos 80° C.

F Engager la clé spèciale T9 sur le collier de serrage (1) et appliquer sur le pignon (12) la clé spèciale T10.
Bloquer la clé T10, tourner le collier de serrage (1) pour relâcher.
NOTE. Si le désassemblage est rendu difficile, chauffer la bague à une chaleur de 80° C.

f

I Allentare ed asportare le viti di ritegno (23), dadi (8) e relative rondelle (6) del supporto differenziale (11).

D Schrauben (23), Muttern (8) die Zwischenlegscheibe (6) das Ausgleichsgetriebe (11) lockern und abschrauben.

E Aflojar y sacar los tornillos (23) de retención, las tuercas (8) y la arandela de espesor correspondiente (6) de soporte differential (11).

F Desserrer et enlever les vis (23), les ecrous (8) et la relative rondelle de rasage (6). de fixation du differentiel support (11).

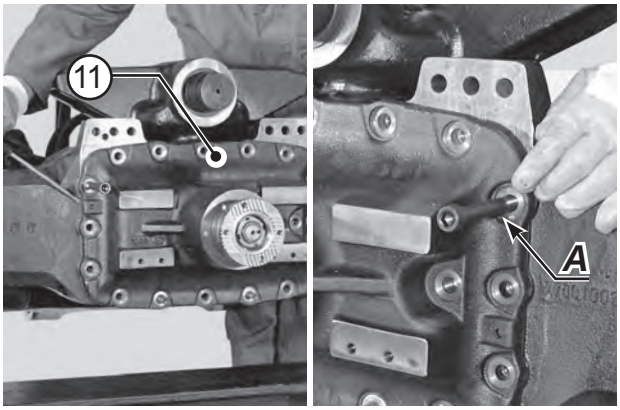

GB a

Tighten two safety studs ***"A"*** in the main body to avoid falling of the bevel gear pair.
Using two levers, disjoin the support (11).
Pay attention not to damage the surfaces.

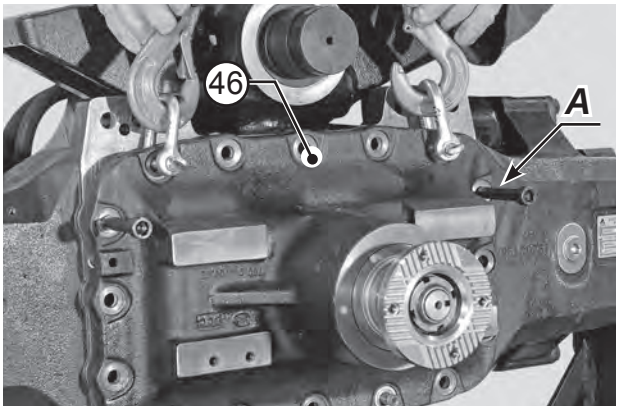

GB b

Connect the whole reduction gear body (11) to a hoist and remove the studs ***"A"*** previously left in place for safety.
Using a plastic hammer, pull away the whole reduction gear body (11).

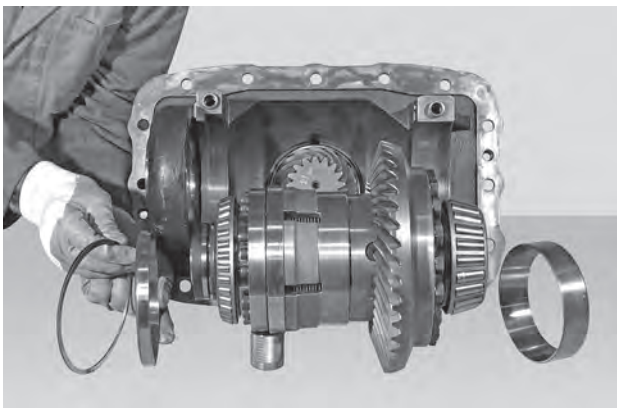

GB c

Extract the whole differential unit.
For details, see «REMOVAL OF DIFFERENTIAL UNIT».

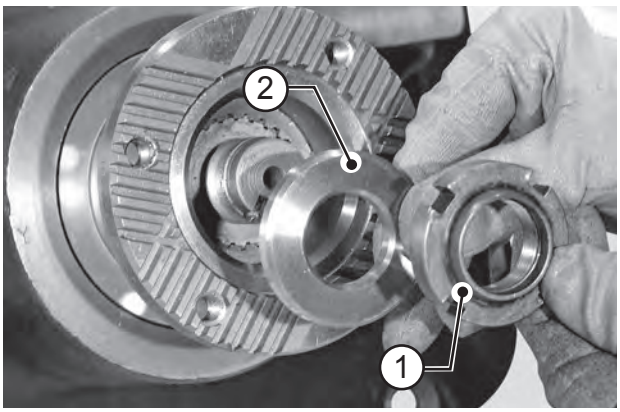

GB d

Remove the ring nut (1); also remove the washer (2).

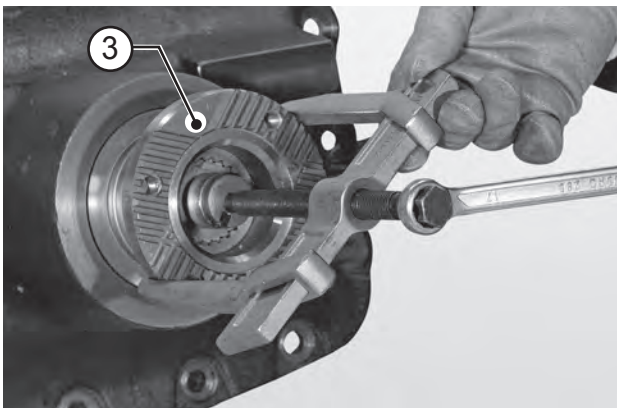

GB e

Remove the flange (3) complete with guard by means of a puller.

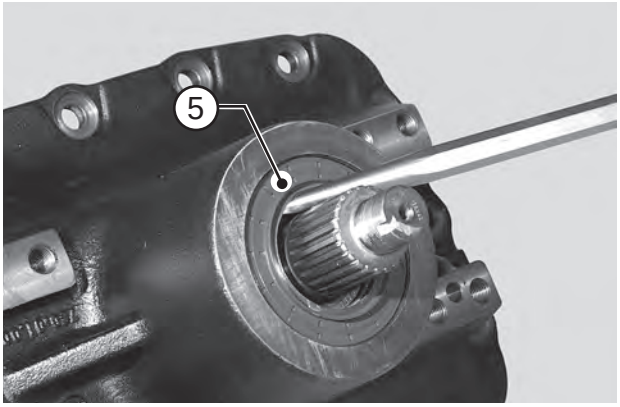

GB f

Remove the sealing ring (5).

a

I Avvitare nel corpo centrale due prigionieri ***"A"*** di sicurezza per evitare la caduta della supportazione coppia conica. Utilizzando due leve, staccare il support (11).
Prestare attenzione a non danneggiare i piani.

D In den zentralen Körper zwei Stiftschrauben ***"A"***, um das Herunterfallen der Befestigung des Kegelräderpaars zu vermeiden. Mit Hilfe von zwei Hebeln, den Deckel (11) trennen .
Achtung, die Flächen nicht verkratzen.

E Atornillar en el cuerpo dos prigionieros ***"A"*** de seguridad para evitar que caiga el soporte del par cónico. Utilizando dos palancas, desprender la tapa (11).
Tener cuidado a fin de no estropear las superficies.

F Dans le corps central, serrer deux goujons ***"A"*** de sécurité pour éviter la chute du support du couple conique A l'aide de deux leviers, décrocher la tapa (11).
Faire trés attention de ne pas abîmer les plateaux.

b

I Collegare il corpo riduttore completo (11) ad un mezzo di sollevamento ed asportare i prigionieri ***"A"*** lasciati in sede per sicurezza.
Utilizzando un mazzuolo in materiale plastico, rimuovere il corpo riduttore (11) completo.

D Den kompletten Reduziererkörper (11) an ein Hebezeug befestigen und die zuvor zur Sicherheit zurückgelassenen Stiftschrauben ***"A"*** abschrauben.
Mit einem Gummihammer, den kompletten Reduziererkörper (11) abnehmen.

E Conectar el cuerpo reductor completo (11) a un medio de elevacion y sacar los prigionieros ***"A"*** dejadas en su lugar para seguridad.
Utilizando un martillo en material plastico, remover el cuerpo reductor (11) completo.

F Brancher le corps réducteur complet (11) à un moyen de relevage, puis enlever les goujons ***"A"*** dans leur siége pour plus de sécurité .
A l'aide d'un maillet en matiére plastique, enlever le corps réducteur (11) complet.

c

I Estrarre il gruppo differenziale completo.
Per i dettagli, vedere «RIMOZIONE GRUPPO DIFFERENZIALE».

D Das komplette Differentialaggregat abziehen.
Siehe «ZUSAMMENBAU UND INSTALLATION DES DIFFERENTIALAGGREGATS».

E Sacar el grupo diferencial completo.
Para los detalles, vease «ASEMBLAJE Y INSTALACION GRUPO DIFERENCIAL».

F Extraire le groupe différentiel (7) ou (8) tout entier.
Pour de plus amples détails, voir "ASSEMBLAGE ET INSTALLATION DU GROUPE DIFFERENTIEL".

d

I Asportare la ghiera (1) e rondella (2).

D Nutmutter (1) abschrauben; Scheibe (2) ebenfalls abnehmen.

E Sacar la virola (1); sacar también la arandela (2).

F Relàcher et enlever le collier de serrage (1) enlever également la cale et rondelle (2).

e

I Utilizzando un estrattore, rimuovere la flangia (3) completa della protezione .

D Mit einem Abzieher, Flansch (3) samt Schutzteil abnehmen.

E Utilizando un extractor, remover la brida (3) completa con la protecciòn .

F A l'aide d'un extracteur, enlever la flasque (3) complète de la protection .

f

I Rimuovere l'anello di tenuta (5).

D Kolbenring (5) entfernen.

E Remover el segmento de compresiòn (5).

F Enlever la bague d'étanchété (5).

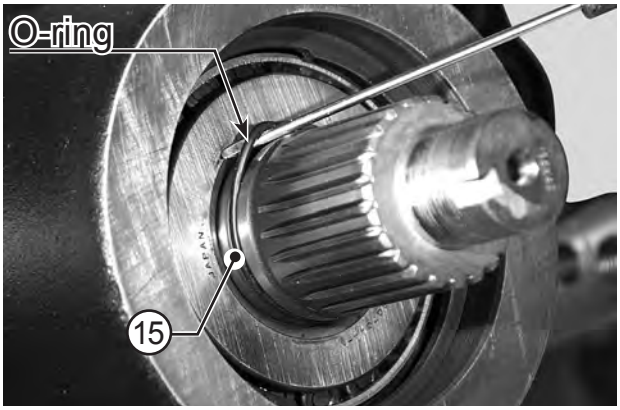

GB a

Remove the O-ring (15).

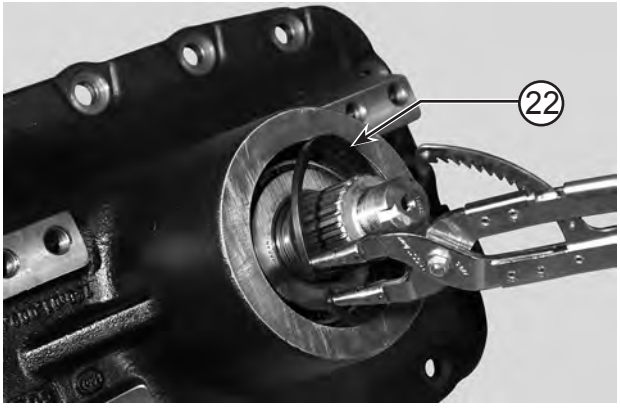

GB b

Remove the snap ring (6).

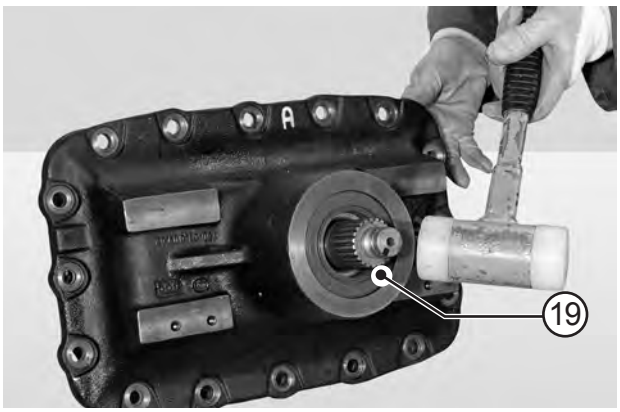

GB c

Using a plastic hammer, remove the pinion (19).

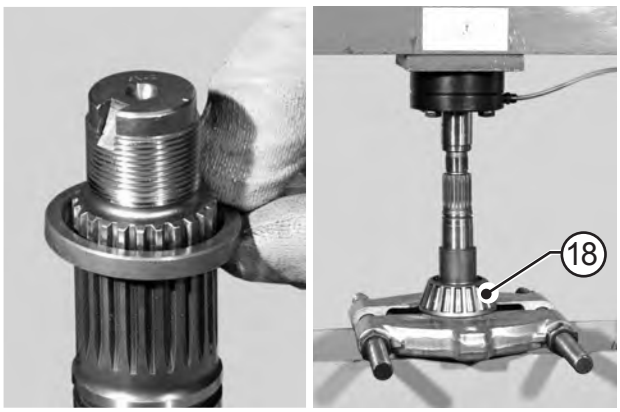

GB d

Using a puller and a press, remove the inner bearing (18) from the pinion (19).

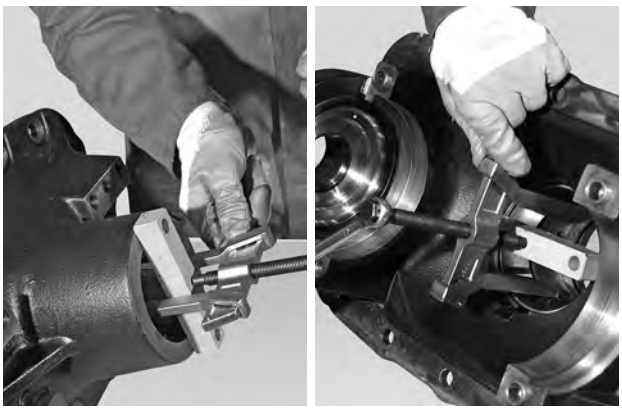

GB e

Remove the thrust block of external (7) and external bearing (18).

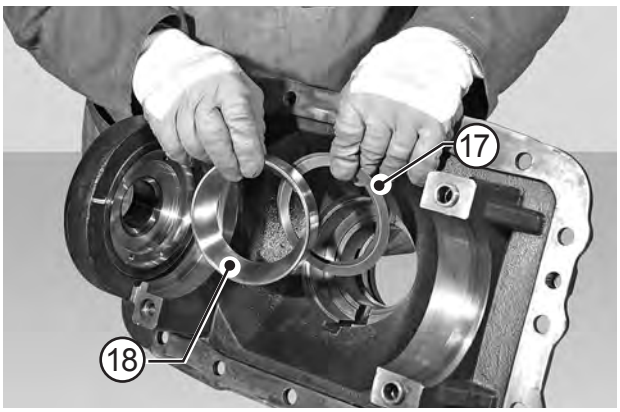

GB f

Remove the thrust block of the internal bearing (18) as well as the shim washers (17).

a

I Rimuovere anello OR (15).

D O-ring (15) entfernen.

E Sacar el anillo OR (15).

F Enlever le bague OR (15).

b

I Rimuovere l'anello elastico (6).

D Spannring (6) entfernen.

E Sacar el anillo elastico (6).

F Enlever la bague élastique (6).

c

I Utilizzando un mazzuolo in materiale plastico, estrarre il pignone (19).

D Mit einem Gummihammer herausschlagen, das Rad (19) abnehmen.

E Utilizando un martillo de material plàstico, extraer el pinòn (19).

F A l'aide d'un maillet en matiére plastique, enlever le piñón (19).

d

I Utilizzando un separatore ed una pressa, rimuovere dal pignone (19) il cuscinetto interno (18).

D Mit einem Abzieher und einer Presse, vom Rad (19) das innere Lager (18) abnehmen.

E Utilizando un extractor y una prensa, remover del pinòn (19) el cojinete interior (18).

F A l'aide de l'extracteur et d'une presse, òter du pignon (19) le palier interne (18).

e

I Rimuovere la ralla del cuscinetto esterno (7) ed interno (18).

D Scheibe vom aüßeren (7) und inneren Lager (18) abnehmen.

E Remover la rangua del cojinete exterior (7) y exterior (18).

F Enlever la crapaudine du palier externe (7) et interieur (18)

f

I Rimuovere la ralla del cuscinetto interno (18) e gli spessori di rasamento (17).

D Scheibe des inneren Lagers (18) und die Zwischen legscheiben (17) entfernen.

E Remover la rangua del cojinete interior (18) y los espesores (17).

F Enlever la crapaudine du palier interieur (18) et les cales de centrage (17).

ASSEMBLY - ASSEMBLAGGIO - MONTIEREN - ENSAMBLAR - ASSEMBLER

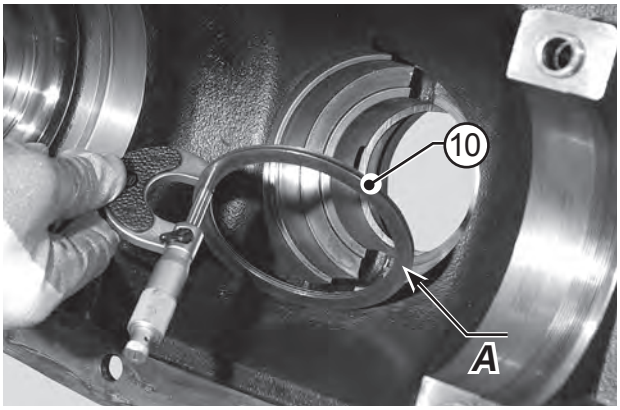

GB a

Check the thickness of first step pinion shims (17).
Example: A = 1,1 mm

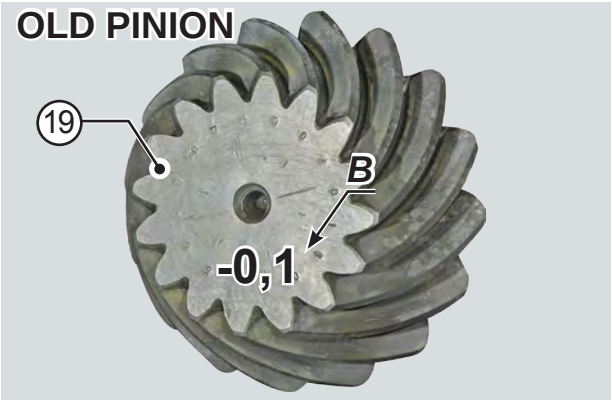

GB b

Check nominal dimension “B” as marked on the old pinion.
Execute the calculation following the indicated formula to obtain the necessary value to the successive calculation.
C = A ± B =
EXAMPLE: C = 1,1 - 0,1 = 1 mm **C = 1 mm**

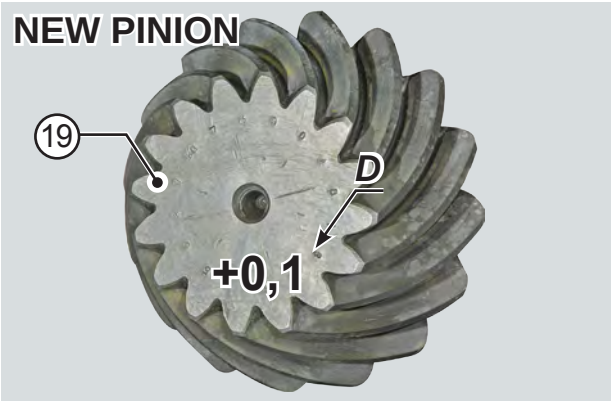

GB c

Check nominal dimension “D” as marked on the new pinion (19).
Execute the calculation following the indicated formula to obtain the value of necessary shims.
S = C - (D) =
Example: S = 1 - (+0,1) = 0,9 mm **S = 0,9 mm**

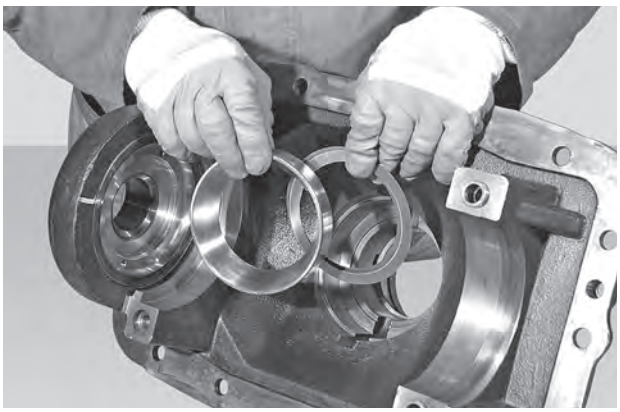

GB d

Partially insert the thrust block of the bearings (9) and shims (8).
NOTE. The smaller shims must be placed in between the thicker ones.

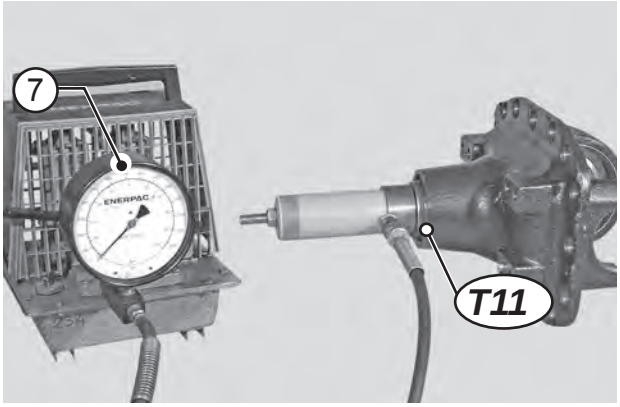

GB e

Connect the tension rod to the press and move the thrust block of the external (7) and external (18) bearing into its seat.
Disconnect the press and remove the tension rod.
NOTE. Before starting the next stage, make sure that the thrust blocks has been completely inserted into its seat.

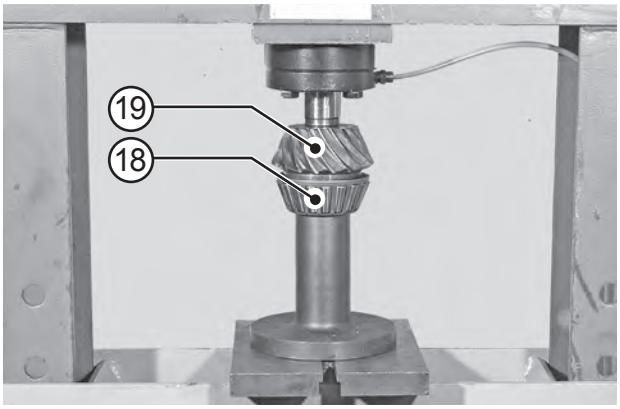

GB f

Position the inner bearing (18) and the pinion (19) under a press; force the bearing onto the pinion.

a

I Rilevare la quota degli spessori (17) del pignone installati in origine.
Esempio: A = 1,1 mm

D Das Maß der Passscheiben (17) des ursprünglich installierten Ritzels erfassen.
Beispiel: A = 1,1 mm

E Medir la cota de los espesores (17) del piñón instalados originariamente.
Ejemplo: A = 1,1 mm

F Relever la cote des cales d'épaisseur (17) installées à l'origine sur le pignon.
Exemple: A = 1,1 mm

b

I Controllare la misura nominale "B " segnata sul pignone di prima installazione (12) (OLD PINION) ed eseguire il calcolo secondo la formula indicata per ottenere il valore necessario al calcolo successivo.
C = A ± B =
Esempio: C = 1,1 - 0,1 = 1 mm C = 1 mm

D Das auf dem Ritzel der Erstinstallation (12) (OLD PINION) angegebene Nennmaß "B " kontrollieren und die Berechnung nach der angegebenen Formel vornehmen, um den für die nächste Berechnung notwendigen Wert zu erzielen. **C = A ± B = Beispiel: C = 1,1 - 0,1 = 1 mm C = 1 mm**

E Controlar la medida nominal "B" indicada en el piñón instalado originariamente (12) (OLD PINION) y efectuar el cálculo según la fórmula indicada para obtener el valor necesario al cálculo siguiente. C = A ± B = Ejemplo: C = 1,1 - 0,1 = 1 mm C = 1 mm

F Contrôler la mesure nominale "B " reportée sur le pignon installé à l'origine (12) (OLD PINION) et exécuter le calcul d'après la formule indiquée pour obtenir la valeur nécessaire pour le calcul successif. C = A ± B = Exemple: C = 1,1 - 0,1 = 1 mm C = 1 mm

c

I Controllare la misura nominale "D " segnata sul pignone nuovo (19) (NEW PINION) ed eseguire il calcolo secondo la formula indicata per ottenere il valore degli spessori da inserire.
S = C - (D) =
Esempio: S = 1 - (+0,1) = 0,9 mm S = 0,9 mm

D Das auf dem neuen Ritzel (19) (NEW PINION) angegebene Nennmaß "D " kontrollieren und die Berechnung nach der angegebenen Formel vornehmen, um den Wert der einzulegenden Passscheiben zu erzielen. **S = C - (D) = Beispiel: S = 1 - (+0,1) = 0,9 mm S = 0,9 mm**

E Controlar la medida nominal "D" marcada en el piñón nuevo (19) (NEW PINION) y efectuar el cálculo según la fórmula indicada para obtener el valor de los espesores por insertar. **S = C - (D) = Ejemplo: S = 1 - (+0,1) = 0,9 mm S = 0,9 mm**

F Contrôler la mesure nominale "D" reportée sur le nouveau pignon (19) (NEW PINION) et exécuter le calcul d'après la formule indiquée pour obtenir la valeur des cales d'épaisseur à mettre en place. **S = C - (D) = Exemple: S = 1 - (+0,1) = 0,9 mm S = 0,9 mm**

d

I Inserire parzialmente nel corpo centrale la ralla dei cuscinetti (26).
NOTA. Gli spessori più fini devono essere contenuti tra quelli più spessi.

D Mit dem Werkzeug auf den zentralen Körper die Scheibe (10) des Lagers (26) befestingen.
BEMERKUNG. Die dünneren Unterlegscheiben müssen zwischen den stärkeren gelegt werden.

E Introducir parcialmente en el cuerpo central la rangua el cojinete (26).
NOTA. Los espesores màs delgados tienen que colocarse entre los màs gruesos.

F Introduire partiellement dans le corps central, la crapaudine du palier (26).NOTE. Les cales plus minces doivent ètre intercalès parmi les plus èpaisses.

e

I Collegare il tirante alla pressa e mandare in sede la ralla del cuscinetto esterno (7) ed interno (18).
Scollegare la pressa e rimuovere il tirante.
NOTA. Prima di proseguire, assicurarsi dell'inserimento totale delle ralle.

D Spannstange mit der Presse verbinden und die Scheibe in ihren Sitz im Äußeren un Inneren (18) Lager (7) einsetzen. Von der Presse abnehmen und Spannstange abnehmen. BEMERKUNG. Sorgfältig kontrollieren, ob die Scheibe richtig eingesetzt worden ist.

E Conectar el tirante a la prensa y colocar en el alojamiento la rangua del cojinete exterior (7) y interior (18).Sacar la prensa y remover el tirante.
NOTA. Antes de continuar, asegurarse de que la rangua està completamente insertada.

F Brancher la tringle à la presse, puis envoyer dans son logement la crapaudine du palier externe (7) et interieur (18).
Débrancher la presse et enlever la tringle.
NOTE. Avant de continuer, s'assurer que la crapaudine est complétement insérée.

f

I Posizionare il cuscinetto interno (18) e pignone (19) sotto una pressa; forzare sul pignone il cuscinetto.

D Das innere Lager (18) und das Rad (19) unter eine Presse setzen; auf das Rad das Lager drücken.

E Posicionar el cojinete interior (18) y el piñón (19) debajo de una prensa; forzar en el piñón el cojinete.

F Placer le palier interne (18) et le pignon (19) sous presse; forcer sur pignon et palier.

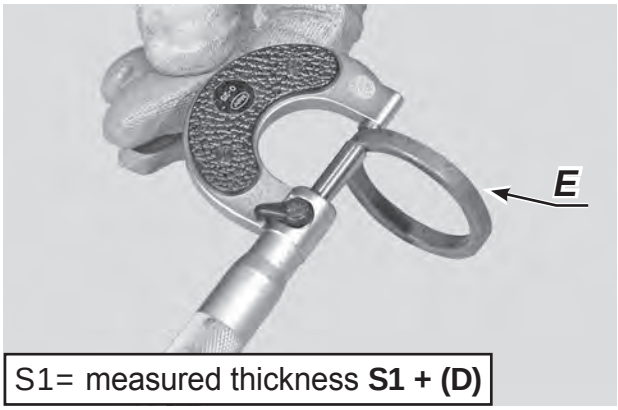

GB a

Check the thickness of first step pinion shims E (6).
Example: E = 1,6 mm

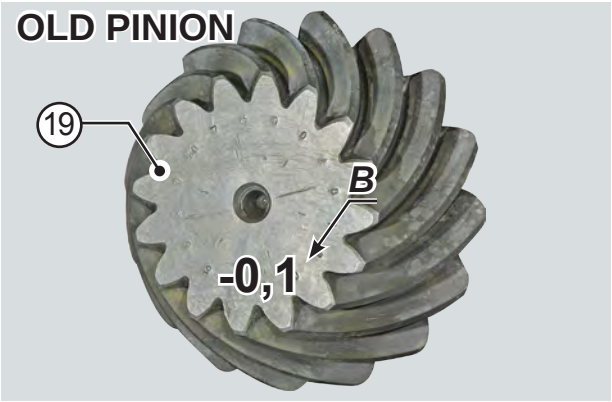

GB b

Check nominal dimension “B” as marked on the old pinion.
Execute the calculation following the indicated formula to obtain the necessary value to the successive calculation.
D = E ± B =
Example: D = 1,6 - 0,1 = 1,5 mm D = 1,5 mm

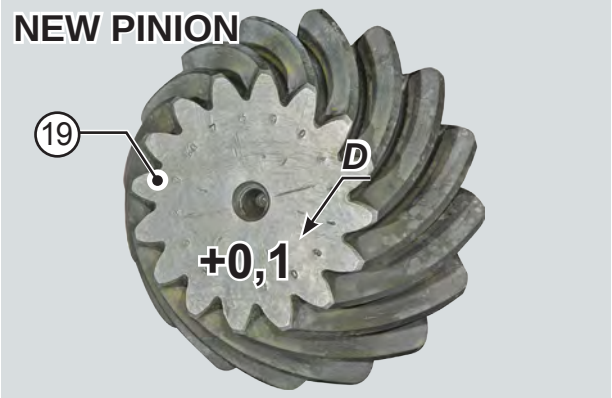

GB c

Check nominal dimension “D” as marked on the old pinion.
Execute the calculation following the indicated formula to obtain the value of necessary shims.
S1 = E - (D) =
Example: S1 = 1,5 - (+0,1) = 1,4 mm S1 = 1,4 mm

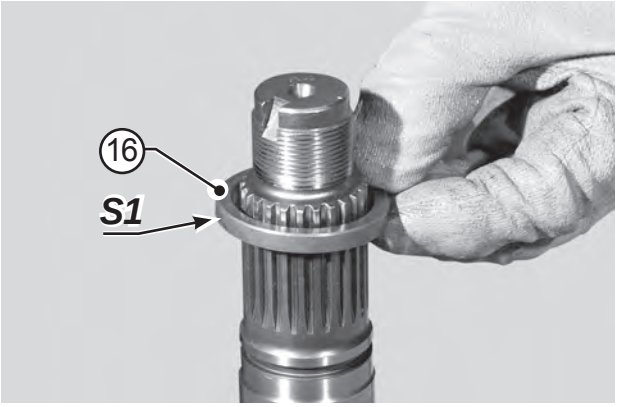

GB d

Install calibrated distance piece ***“S1”*** (16).

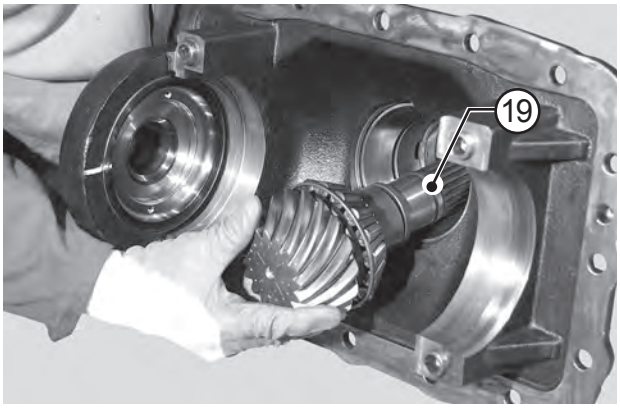

GB e

Fit the pinion (19) in the main body.

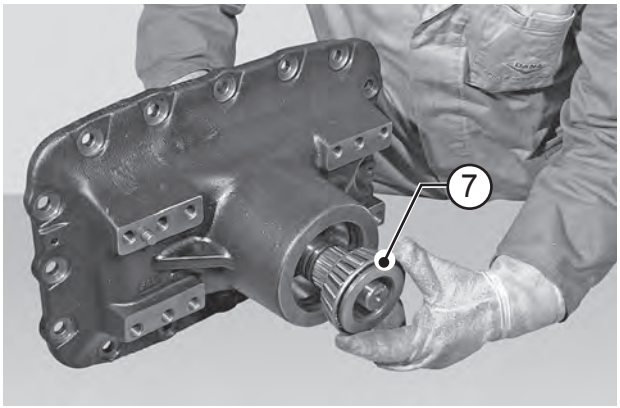

GB f

Heat the outer bearing (7) to a temperature of about 80C° and fit it on to the pinion (19) so as to complete the pack as shown in the figure.
NOTE. Lightly lubricate bearing (7) with SAE85W90 oil.

a

I Rilevare la quota degli spessori E (6) installati in origine.
Esempio: E = 1,6 mm

D Das Maß der Passscheiben (6) des ursprünglich installierten Ritzels erfassen.
Beispiel: E = 1,6 mm

E Medir la cota de los espesores (6) del piñón instalados originariamente.
Ejemplo: E = 1,6 mm

F Relever la cote des cales d'épaisseur (6) installées à l'origine sur le pignon.
Exemple:E = 1,6 mm

b

I Controllare la misura nominale "B " segnata sul pignone di prima installazione (OLD PINION) ed eseguire il calcolo secondo la formula indicata per ottenere il valore necessario al calcolo successivo.
D = E ± B =
Esempio: D = 1,6 - 0,1 = 1,5 mm D = 1,5 mm

D Das auf dem Ritzel der Erstinstallation (12) (OLD PINION) angegebene Nennmaß "B " kontrollieren und die Berechnung nach der angegebenen Formel vornehmen, um den für die nächste Berechnung notwendigen Wert zu erzielen. **D = E ± B =** = Beispiel: **D = 1,6 - 0,1 = 1,5 mm**
D = 1,5 mm

E Controlar la medida nominal "B" indicada en el piñón instalado originariamente (12) (OLD PINION) y efectuar el cálculo según la fórmula indicada para obtener el valor necesario al cálculo siguiente. **D = E ± B =** Ejemplo: **D = 1,6 - 0,1 = 1,5 mm D = 1,5 mm**

F Contrôler la mesure nominale "B " reportée sur le pignon installé à l'origine (12) (OLD PINION) et exécuter le calcul d'après la formule indiquée pour obtenir la valeur nécessaire pour le calcul successif. **D = E ± B =** Exemple:
D = 1,6 - 0,1 = 1,5 mm D = 1,5 mm

c

I Controllare la misura nominale "D " segnata sul pignone nuovo (NEW PINION) ed eseguire il calcolo secondo la formula indicata per ottenere il valore degli spessori da inserire.
S1 = E - (D) =
Esempio: S1 = 1,5 - (+0,1) = 1,4 mm S1 = 1,4 mm

D Das auf dem neuen Ritzel (12) (NEW PINION) angegebene Nennmaß "D " kontrollieren und die Berechnung nach der angegebenen Formel vornehmen, um den Wert der einzulegenden Passscheiben zu erzielen.
S1 = E - (D) = Beispiel: S1 = 1,5 - (+0,1) = 1,4 mm
S1 = 1,4 mm

E Controlar la medida nominal "D" marcada en el piñón nuevo (12) (NEW PINION) y efectuar el cálculo según la fórmula indicada para obtener el valor de los espesores por insertar. **S1 = E - (D) =**
Ejemplo: S1 = 1,5 - (+0,1) = 1,4 mm S1 = 1,4 mm

F Contrôler la mesure nominale "D" reportée sur le nouveau pignon (12) (NEW PINION) et exécuter le calcul d'après la formule indiquée pour obtenir la valeur des cales d'épaisseur à mettre en place. **S1 = E - (D) =**
Exemple: S1 = 1,5 - (+0,1) = 1,4 mm S1 = 1,4 mm

d

I Inserire il distanziale calibrato ***"S1"*** (16).

D Distanzstück ***"S1"*** (16) montieren.

E Montar espesores ***"S1"*** (16).

F Monter cales ***"S1"*** (16).

e

I Inserire il pignone (19).

D Rad (19) einsetzen.

E Montar le piñón (19).

F Monter le piñón (19).

f

I Montare nel corpo centrale, il pignone (19).Scaldare a circa 80 C° il cuscinetto esterno (7) e montarlo sul pignone (19).
NOTA. Lubrificare leggermente con OLIO SAE 85W90 il cuscinetto.

D Zentralen Kòrper, Rad (19) montieren.
Das Lager (7) auf ca. 80 C° erhitzen und auf das Rad (7) montieren.
BEMERKUNG. Das Lager mit etwas SAE 85W90 schmieren.

E Montar en el cuerpo central el piniòn (19).
Calentar a 80 C° approx el cojinete (7) y montarlo sobre el pignon (19).
NOTA. Despues del enfriamiento, lubrificar ligermente el cojinete (7) con aceite SAE 85W90.

F Monter le corps central, le pignon (7).
Chauffer à environ 80 C° le roulement extérieur (7) et le monter sur le pignon (19) de manière à compléter le paquet composé comme illustré dans la figure.
NOTE. Lubrifier légèrement le roulement (7) à l'HUILE SAE 85W90.

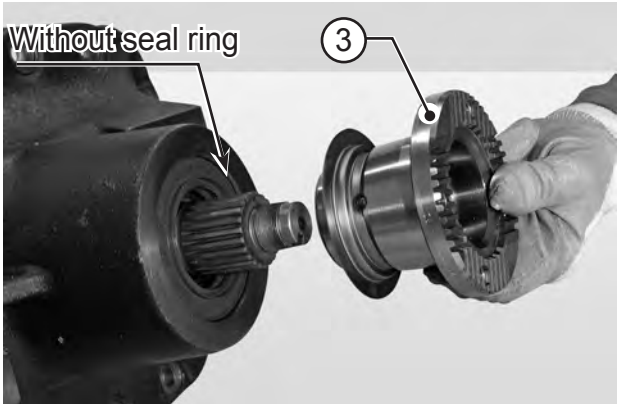

GB a

Install the flange (3) onto the pinion (19) without sealing ring (5).

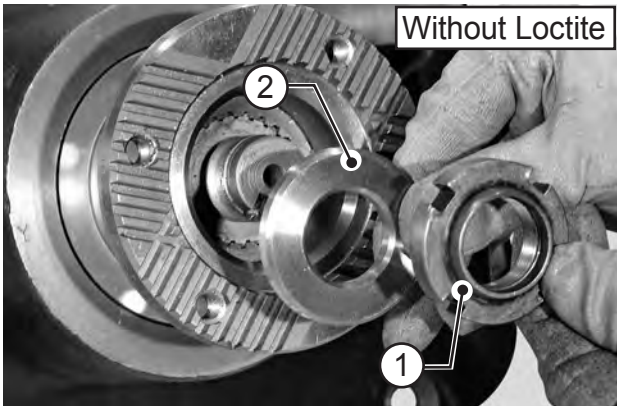

GB b

Assemble washer (18) and ring nut (1).

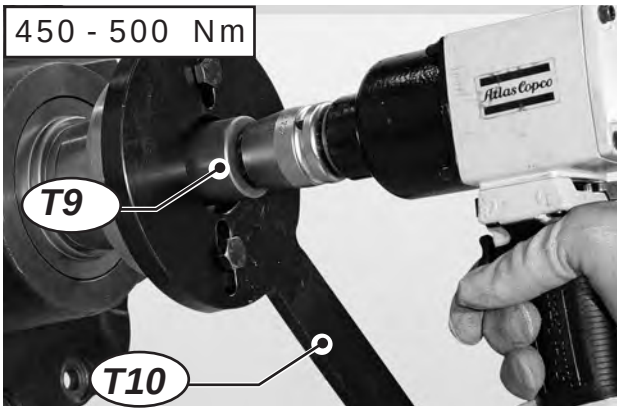

GB c

Position wrench T9 onto the ring nut (1) and apply bar hold to the flange (3). Stop wrench T10 and rotate the nut using a dynamometric
wrench, up to required torque setting of 450 - 500 Nm.

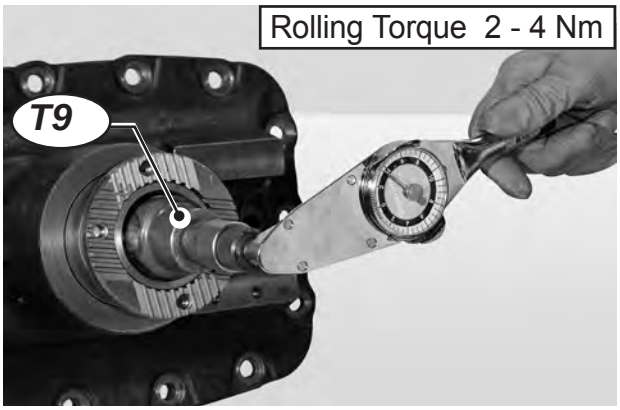

GB d

Apply onto the pinion (19) the bar-hold and with the help of a torque metre, check the torque of the pinion (19).
Torque: 2 -4 Nm
CAUTION! If torque exceeds the maximum value, then the size of shim “S1 ” (16) needs to be increased.
CAUTION!If torque does not reach the minimum value, then the size of shim “S1 ” (16) needs to be reduced.

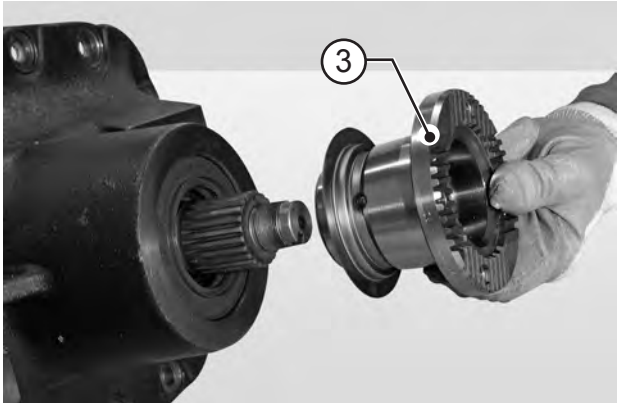

GB e

Remove the flange (19).

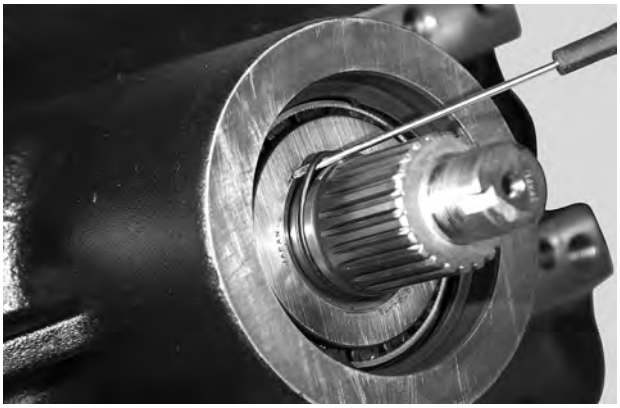

GB f

Lubricate with grease and replace the outer O-ring (15).

a

I Montare la flangia (3) sul pignone (19) senza anello di tenuta.

D Das Gewinde der Nutmutter (3) und auf das Rad (19) schrauben (5).

E Montar la brida (3) en el piniòn (19) sin la junta (5).

F Montar la bride (3) sur le pignon (19) sans la bague d'étanchéité (5).

b

I Montare rondella (18) e ghiera (1).

D Scheibe (18) und Nutmuttern (1) montieren.

E Poner la arandela (18) y la virola (1).

F Monter rondelle (18) et le collier de serrage (1).

c

I Impegnare la chiave T9 sulla ghiera ed applicare la chiave T10 sulla flangia.
Fermare la chiave e ruotare il pignone con una chiave dinamometrica fino alla coppia minima richiesta di 450 - 500 Nm.

D Den speziellen Schlüssel T9 in die Nutmutter (1) setzen und Flansch (12) den speziellen Schlüssel T10 anbringen. Schlüssel T9 festhalten und Flansch mit einem Momentenschlüssel drehen zu Anzugsmoment von 450 - 500 Nm erreicht worden ist.

E Bloquear la llave especial T9 en la virola (1) y aplicar en el brida (12) la llave especial T10.
Bloquear la llave T9 y girar la virola con una llave dinamométrica hasta el par requerido de 450 - 500 Nm

F Engager la clé spèciale T9 sur le collier de serrage (1) et appliquer sur le pignon (12) la clé spèciale T10.
Bloquer la clé T9, tourner le collier de serrage (1) avec une clé dynamométrique jusqu'au couple requis de 450 - 500 Nm.

d

I Applicare sul pignone (19) il codolo e con un torsiometro, controllare la coppia di rotazione del pignone. Coppia di rotazione: 2 - 4 Nm
ATTENZIONE! Se la coppia supera il valore massimo bisogna aumentare lo spessore "S1 " (16).
ATTENZIONE!Se la coppia di rotazione non raggiunge il valore minimo, è necessario diminuire lo spessore "S1 " (16).

D Den Schaft auf die Welle (16) montieren und mit einem Drehmomentmessgerät das Drehmoment der Welle kontrollieren. Drehmoment: 2 - 4 NmACHTUNG!Falls das Drehmoment größer als der maximale Wert sein sollte,müssen mehr Unterlegscheiben "S1 " (16) werden. ACHTUNG!Falls das Drehmoment den minimalen Wert nicht erreicht,muß das Distanzstück "S1 " (16) kleiner gewäehlt werden.

E Aplicar el mango en el piñón (19) y con un torsiòmetro,controlar el par de rotaciòn del piñón.Par de rotaciòn: 2 - 4 Nm.
CUIDADO! Si el par supera el valor màximo,hay que aumentar el espesor "S1 " (16).
CUIDADO! Si el par de rotaciòn no alcanza el valor monimo,hay que disminuir el espesor "S1 " (16).

F Appliquer la queue sur le pignon (19)et l 'aide d 'un torsiométre,contròler le couple de rotation dupignon. Couple de rotation:2 - 4 Nm
ATTENTION! Si le couple dépasse la valeur maximale,il faut augmenter la cale "S1 " (16).
ATTENTION! Si le couple de rotation n 'atteint pas la valeur minimale,il faut diminuer la cale "S1 " (16).

e

I Rimuovere la flangia (19).

D Flansch (19) abnehmen.

E Remover la brida (19).

F Enlever la flasque (19).

f

I Lubrificare con grasso ed installare l'anello OR (15).

D Mit Fett den O-ring (15) schmieren und montieren.

E Lubricar con grasa e instalar el anillo OR (15).

F Lubrifier avec du gras et installer OR (15).

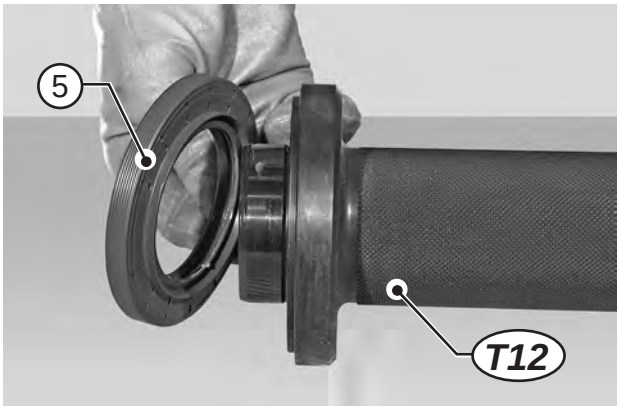

GB a

Lubricate and fit the sealing ring (5) onto tool T12.

GB b

Install the ring into the pinion support.

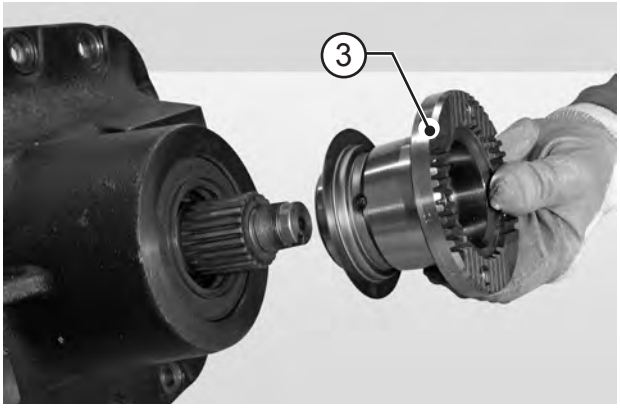

GB c

Fit the flange (3) complete with the guard and fasten it.
For keying the flange (3), use a plastic hammer if necessary.
NOTE. Make sure that the guard is securely fastened onto the flange and that it is not deformed.

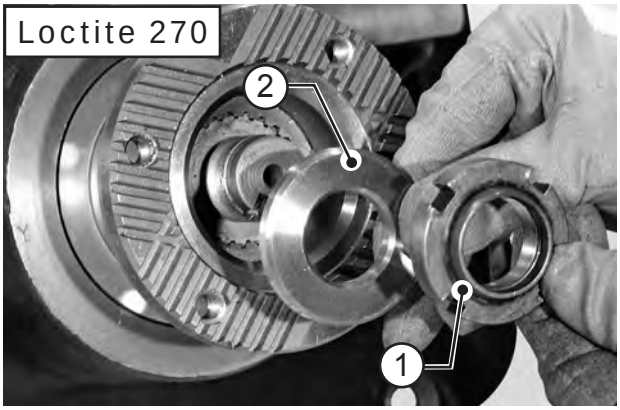

GB d

Apply Loctite 270 to the threaded part of the pinion (19).
Assemble washer (2) and ring nut (1).

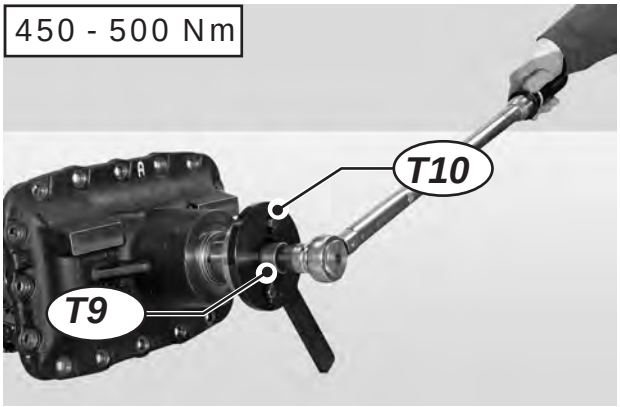

GB e

Position wrench T10 onto the ring nut (1) and apply bar hold to the flange (3). Stop wrench T9 and rotate the nut using a dynamometric
wrench, up to required torque setting of 450 - 500 Nm.

GB f

Caulk the ring nut (1).
CAUTION! If the ring nut (1) is re-used, caulk the second position. Do not re-caulk the same portion.

a

I Lubrificare e montare sull 'attrezzo T12 l 'anello di tenuta (5).

D Den Dichtring (5) einfetten und auf das Werkzeug T12 montieren.

E Lubricar y montar sobre la herramienta T12 el anillo de retenciòn (5).

F Lubrifier et monter sur l 'outil T12 la bague (5).

b

I Inserire l' anello nel supporto pignone.

D Die Ringe in den Getriebe einsetzen.

E Montar los anillos en el soporte.

F monter les anneaux dans le bras.

c

I Montare la flangia (3) completa della protezione e mandarla in battuta.
Se necessario, per il calettamento della flangia (3), usare un mazzuolo in materiale plastico.
NOTA. Controllare che la protezione sia ben forzata sulla flangia e che non sia deformata.

D Flansch (3) samt Schutzteil montieren und bis zumAnschlag bringen.
Wenn nötig, den Flansch (3) mit einem Gummihammereinschieben.BEMERKUNG. Kontrollieren ob das Schutzteil richtig auf dem Flansch sitzt und nicht verformt ist.

E Montar la brida (3) con su protecciòn y llevarla hasta el tope.
Si fuera necesario, para ensamblar de la brida (3) usarun martillo de material plástico.
NOTA. Controlar que la protección está bien forzada en la brida y que no está deformada.

F Monter la flasque (3) équipée de protection , puisenvoyer celle-ci en butée.
Si besoin, pour caler la flasque (3) utiliser un maillet en matiére plastique.
NOTE. Veiller à ce que la protection est bien forcée sur la flasque et qu'elle n'est pas déformée.

d

I Spalmare la porzione filettata del pignone (19) con Loctite 270. Montare rondella (2) e ghiera (1).

D Das Gewinde des Rads (19) mit Loctite 270 schmieren. Scheibe (2) und Nutmuttern (1) montieren.

E Pasar en la parte roscada del piñón (19) Loctite 270. Poner la arandela (2) y la virola (1).

F Enduire la partie filetée du pignon (19) avec du Loctite 270. Monter rondelle (2) et le collier de serrage (1).

e

I Impegnare la chiave T9 sulla ghiera ed applicare la chiave T10 sulla flangia .
Fermare la chiave e ruotare il pignone con una chiave dinamometrica fino alla coppia minima richiesta di 450 - 500 Nm.

D Den speziellen Schlüssel T10 in die Nutmutter (1) setzen und Flansch (12) den speziellen Schlüssel T9 anbringen. Schlüssel T9 festhalten und Flansch mit einem Momentenschlüssel drehen zu Anzugsmoment von 450 - 500 Nm erreicht worden ist.

E Bloquear la llave especial T10 en la virola (1) y aplicar en el brida (12) la llave especial T9 .
Bloquear la llave T9 y girar la virola con una llave dinamométrica hasta el par requerido de 450 - 500 Nm

F Engager la clé spèciale T10 sur le collier de serrage (1) et appliquer sur le pignon (12) la clé spèciale T9.
Bloquer la clé T9, tourner le collier de serrage (1) avec une clé dynamométrique jusqu'au couple requis de 450 - 500 Nm.

f

I Cianfrinare la ghiera (1).
ATTENZIONE! Se la ghiera (1) viene riutilizzata, cianfrinare la seconda posizione.
Non ripetere la cianfrinatura sopra quella precedente.

D Verstemmen Sie die Nutmutter (1).
ACHTUNG! Sollte dir Nutmutter (1) wieder verwendet werden,
verstemmen Sie die zweite Position.
Verstemmen Sie die zweite Position nicht über der vorangehend beschriebenen

E Recalcar la virola (1).
¡ATENCIÓN! Si la virola (1) se vuelve a utilizar, recalcar la segunda posición.
No repetir la recalcadura sobre la anterior.

F Chanfreiner la bague-manchon (1).
ATTENTION ! Si la bague-manchon (1) est réutilisée, chanfreiner la deuxième position.
Ne pas refaire un chanfrein sur le précédent chanfrein.

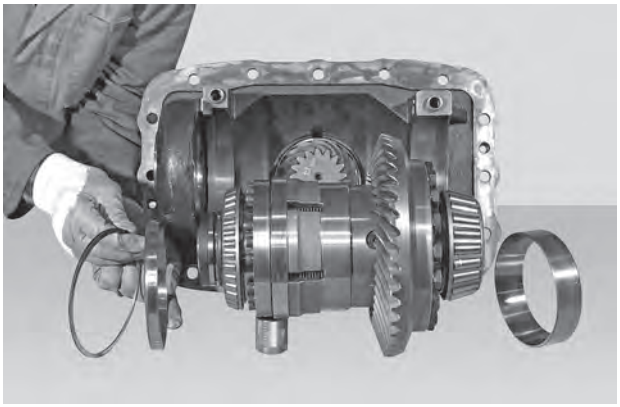

GB a

Install the whole differential unit.
For details, see «ASSEMBLY AND INSTALLATION OF THE DIFFERENTIAL UNIT».

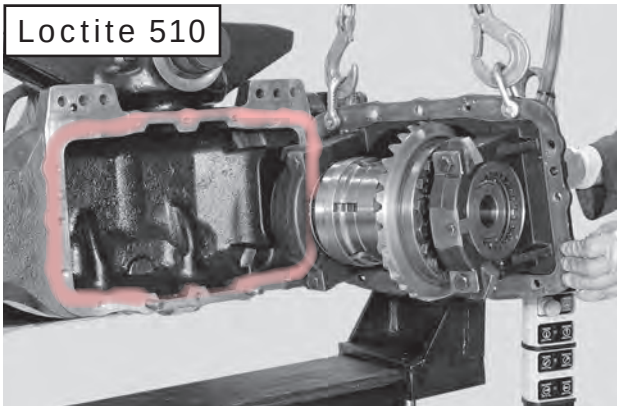

GB b

Tighten two safety studs ***"A"*** in the main body to avoid falling of the bevel gear pair. Coat the machined contact surface of the main body with Loctite 510 and install the support (45).
NOTE. Make sure that a continuous layer of sealant runs around the locking holes.

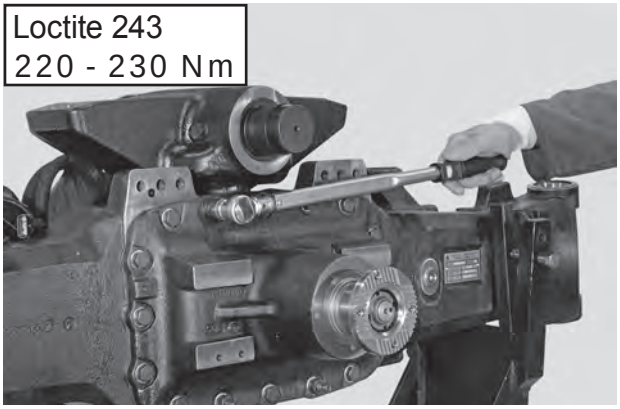

GB c

Coat the screws (23) with Loctite 243 together with washer (41) and screw them.
Using the criss-cross method and a tightening torque of 220 - 230 Nm.

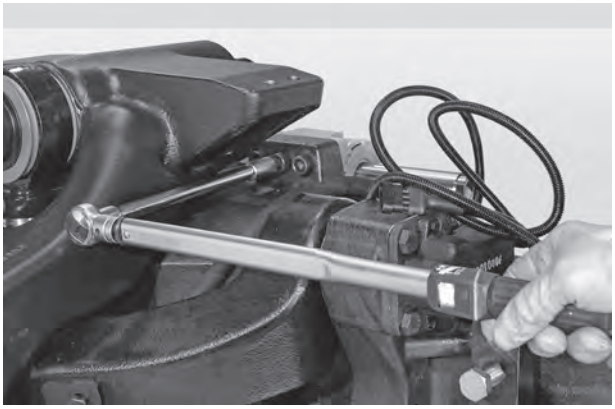

GB d

Fit the steering cylinder into its seat.
Lock the cylinder by cross- tightening the screws .
Torque wrench setting: 220 - 230 Nm
For details, see: HOW TO ASSEMBLY THE STEERING CYLINDER

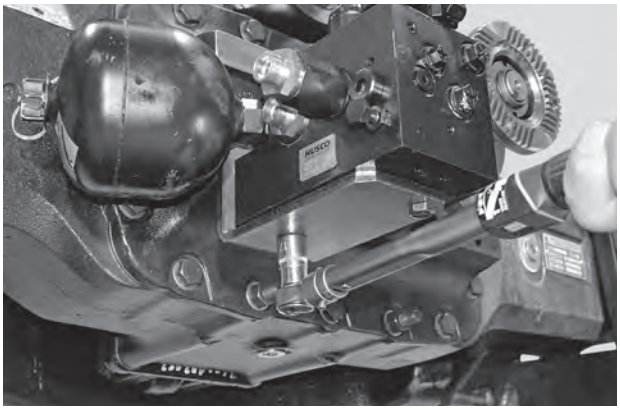

GB e

Secure the valve assembly.
For details, see: ASSEMBLING AND INSTALLING THE CONTROL VALVE

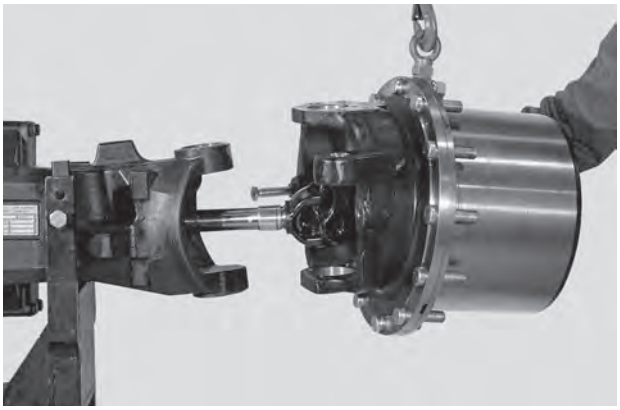

GB f

Pay attention don't damage the dust cover rings and the sealing rings.
Install the steering case.
For details, see: HOW TO ASSEMBLE THE COMPLETE STEERING CASE.

a

I Montare il gruppo differenziale completo.
Per i dettagli, vedere «ASSEMBLAGGIO ED INSTALLAZIONE GRUPPO DIFFERENZIALE».

D Das komplette Differentialaggregat montieren.
Siehe «ZUSAMMENBAU UND INSTALLATION DES DIFFERENTIALAGGREGATS».

E Monter el grupo diferencial completo.
Para los detalles, vease «ASEMBLAJE Y INSTALACIONGRUPO DIFERENCIAL».

F Monter le groupe différentiel out entier.
Pour de plus amples détails, voir “ASSEMBLAGE ET INSTALLATION DU GROUPE DIFFERENTIEL”.

b

I Avvitare nel corpo centrale due prigionieri ***“A”*** di sicurezza per evitare la caduta della supportazione coppia conica. Spalmare la superficie di contatto del corpo centrale con Loctite 510 ed installare il coperchio (45).
NOTA. Assicurarsi che il sigillante crei un velo continuo attorno ai fori di fissaggio.

D In den zentralen Körper zwei Stiftschrauben ***“A”***, um das Herunterfallen der Befestigung des Kegelräderpaars zu vermeiden.Die Spiegelfläche des Zentralkörpers mit Loctite 510 schmieren und den Deckel (45) installieren.
BEMERKUNG. Sicherstellen, daß die Dichtmasse einen Film um die Befestigungslöcher herum bildet.

E Atornillar en el cuerpo dos prigionieros ***“A”*** de seguridad para evitar que caiga el soporte del par cónico. Pasar la superficie de contacto del cuerpo central con Loctite 510 y instalar la tapa (45).
NOTA. Asegurarse que el sigilante cree una pelicula continua alrededor a los agujeros de fisaje.

F Dans le corps central, serrer deux goujons ***“A”*** de sécurité pour éviter la chute du support du couple conique. Enduire la superficie de contact du corps central avec du Loctite 510, installer le couvercle (45).
REMARQUE. S’assurer que la couche de colle entoure bien les trous de fixation.

c

I Spalmare le viti (23) con Loctite 243 ed avvitarle complete di rondelle (41).
Serrare le viti (9) con il metodo incrociato ad una coppia di serraggio di 220 - 230 Nm.

D Die Schrauben (23) mit Loctite 243 einschmieren und mit der Bordscheibe (41) festschrauben.
Die Schrauben (38) im Kreuz mit einem Anzugsmoment von 220 - 230 Nm festziehen.

E Untar los tornillos (23) con Loctite 243 y anillo de adaptación (41) atornillarlos.Serrer les vis (9) avec la méthode croisée à un couple de serrage de 220 - 230 Nm.

F Enduire les écrous (23) avec Loctite 243 puis et complet de rondelle de support (41) visser.
Apretar los tornillos (9) con el metodo cruzado y un par de torsion de 220 - 230 Nm.

d

I Montare in sede il cilindro di sterzatura .
Bloccare il cilindro con le viti serrate con il metodo incrociato.
Coppia di serraggio: 220 - 230 Nm
Per i dettagli, vedere: ASSEMBLAGGIO CILINDRO DI STERZATURA

D Den Lenkzylinder in seinen Sitz montieren.
Zylinder mit den Schrauben blockieren; dabei die Schrauben entgegengesetzt und abwechselnd festschrauben. Anzugsmoment 220 - 230 Nm
Einzelheiten im Paragraph: LENKZYLINDER MONTIEREN

E Montar en el alojamiento el cilindro de direcciòn .
Bloquear el cilindro con los tornillos apretados con el mètodo cruzado. Par de torsiòn: 220 - 230 Nm
Para los detalles, vease: MONTAJE CILINDRO DE DIRECCION

F Monter le logement du cylindre de braquage .
Bloquer le cylindre à l’aide des vis serrès par le biais du mode croisé. Couple de serrage: 220 - 230 Nm
Pour tout détail, voir: ASSEMBLAGE DU CYLINDRE DE BRAQUAGE

e

I Fissare il gruppo valvole.
Per i dettagli, vedere: ASSEMBLAGGIO E INSTALLAZIONE VALVOLA DI CONTROLLO

D Fixieren Sie das Ventilaggregat.
Einzelheiten im Paragraph: MONTAGE UND EINBAU DES KONTROLLVENTILS

E Fijar el grupo de válvulas.
Para los detalles, vease: ENSAMBLAJE E INSTALACIÓN VÁLVULA DE CONTROL

F Fixer le groupe de soupapes.
Pour tout détail, voir: ASSEMBLAGE ET MISE EN PLACE DE LA SOUPAPE DE CONTRÔLE

f

I Prestare molta attenzione per non danneggiare gli anelli parapolvere e di tenuta.
Installare la scatola snodo.Per i dettagli, vedere: MONTAGGIO SCATOLA SNODO COMPLETA.

D Vorsicht: Staubschutzringe und Dichtungsringe nicht beschädigen.
Das Gelenkgehäuse-Aggregat montieren.Weitere Einzelheiten im Paragraph: KOMPLETTES GELENKGEHÄUSE MONTIEREN.

E Tener mucho cuidado a fin de no danàr los segmentos de protecciòn.Montar el grupo caja de ròtula.Para los detalles, vease: MONTAJE CARTER DE ROTULA COMPLETO.

F Faire très attention à ne pas abîmer les bagues antipoussiére et d’étanchéitè .
Monter le groupe du boõtier articulation.
Pour tout détail, voir: MONTAGE DU BOITIER ARTICULATION COMPLET.

REMOVE - RIMOZIONE - ABMONTIEREN - REMOCION - DEPOSE

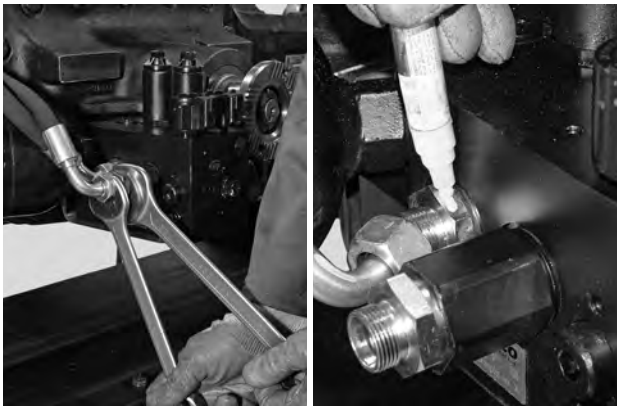

GB a

Loosen and remove hydraulic connectors.
NOTE: Mark the position of the hydraulic connectors.

GB b

Mark the positions of the hydraulic lines and relative mountings.

GB c

Loosen the expansion tank connector.

GB d

Loosen and remove the retainer screws on the expansion tank mounting then remove the expansion tank.

GB e

Loosen and remove the valve assembly retainer screws.
Remove the valve assembly.

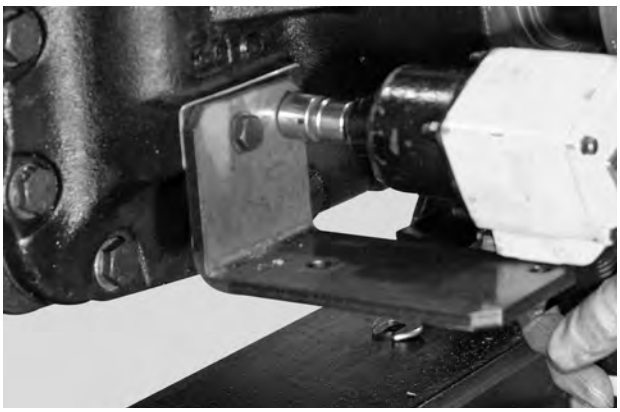

GB f

Loosen and remove the screws fastening the mountings.
Mark the positions of the mountings.

a

I Allentare e rimuovere i raccordi idraulici.
NOTA: Contrassegnare la posizione dei raccordi idraulici.

D Lösen Sie die Wasseranschlussstücke und nehmen Sie diese ab.
BEMERKUNG: Position die Wasseranschlussstücke markieren

E Aflojar y quitar los racores hidráulicos.
NOTA: Marcar la posición de los racores hidráulicos.

F Desserrer et enlever les raccords hydrauliques.
NOTE: Marquer la position du les raccords hydrauliques.

b

I Segnare le posizioni delle tubazioni idrauliche (67)(68) e dei relativi supporti.

D Die Positionen der Hydraulikleitungen und der entsprechenden Halterungen anzeichnen.

E Marcar las posiciones de los conductos hidráulicos y de los respectivos soportes.

F Repérer les positions des conduites hydrauliques et des supports correspondants.

c

I Allentare il raccordo del vaso di espansione.

D Lösen Sie den Anschluss des Ausdehnungsgefäßes

E Aflojar el racor del vaso de expansión.

F Desserrer le raccord du vase d'expansion.

d

I Allentare e rimuovere le viti di fissaggio del supporto del vaso di espansione, quindi rimuovere il vaso di espansione.

D Lösen und entfernen Sie die Befestigungsschrauben des Gestells des Ausdehnungsgefäßes; nehmen Sie dann das Ausdehnungsgefäß ab.

E Aflojar y quitar los tornillos de fijación del soporte del vaso de expansión, luego sacar el vaso de expansión.

F Dévisser et enlever les vis de retenue du support du vase d'expansion, puis enlever le vase d'expansion.

e

I Allentare e rimuovere le viti di fissaggio del gruppo valvole.
Rimuovere il gruppo valvole.

D Lösen Sie die Befestigungsschrauben des Venitlaggregats und nehmen Sie diese ab.
Entfernen Sie das Ventilaggregat.

E Aflojar y quitar los tornillos de fijación del grupo de válvulas.
Sacar el grupo de válvulas.

F Desserrer et enlever les vis de retenue du groupe de soupapes.
Enlever le groupe de soupapes.

f

I Allentare e rimuovere le viti di fissaggio dei supporti .Segnare la posizione dei supporti.

D Die Schrauben zur Befestigung der Halterungen lösen und abnehmen. Die Positionen der Halterungen anzeichnen.

E Aflojar y retirar los tornillos de fijación de los soportes. Marcar la posición de los soportes.

F Desserrer et enlever les vis de fixation des supports. Repérer la position des supports.

ASSEMBLY - ASSEMBLAGGIO - MONTIEREN - ENSAMBLAR - ASSEMBLER

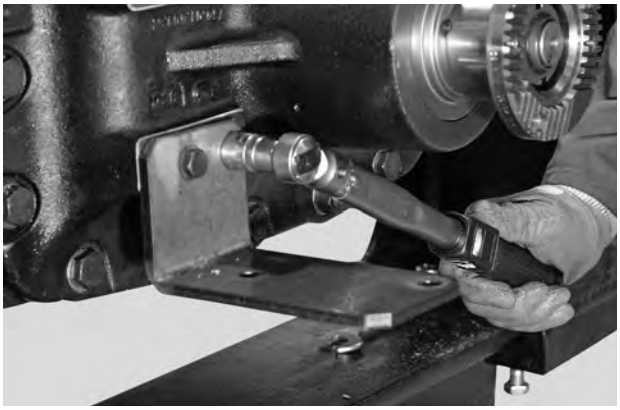

GB a

Fit the mounting for the hydraulic lines onto the central case.
Apply LOCTITE 243 to the fastener screw.
Torque wrench setting: 80 - 100 Nm.
NOTE. Fit as originally mounted, using the markings made previously as reference.

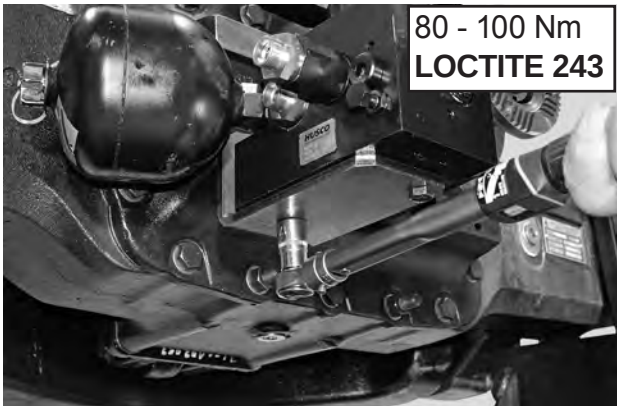

GB b

Secure the valve assembly.
Apply LOCTITE 243 to the fastener screw.
Fit the fastener screws and tighten to a torque of 80 - 100 Nm.

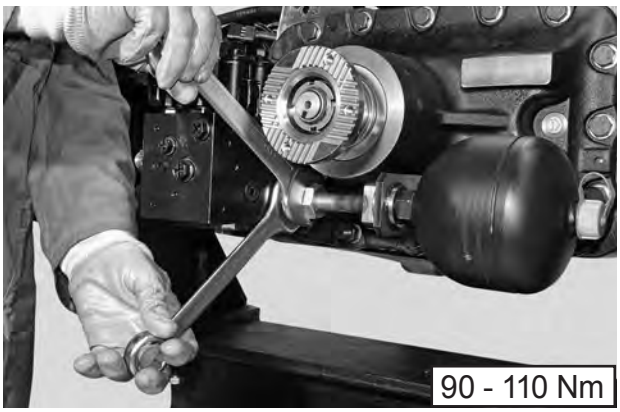

GB c

Secure expansion tank onto its mounting.
Torque wrench setting: 90 - 110 Nm.

GB d

Secure the expansion tank.
Apply LOCTITE 243 to the fastener screw.
Fit the fastener screws and tighten to a torque of 80 - 100 Nm.

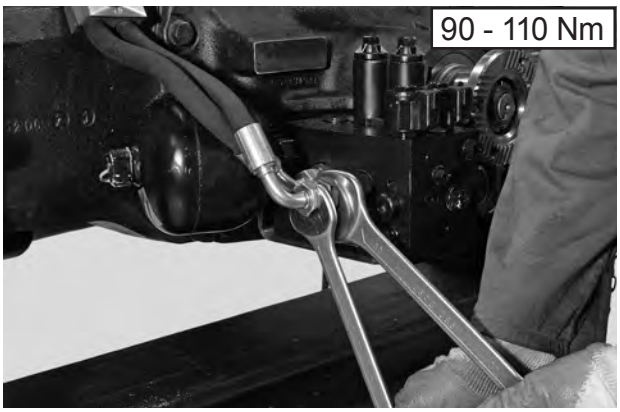

GB e

Secure hydraulic connectors correctly.
Torque wrench setting: 90 - 110 Nm
NOTE. Fit as originally mounted, using the markings made previously as reference, do not swap.

GB f

Fit the hydraulic lines onto the mounting.
Fasten in position with the plate (62) and screw (61).
NOTE. Fit as originally mounted, using the markings made previously as reference.

a

I Montare sulla scatola centrale il supporto delle tubazioni idrauliche.
Applicare LOCTITE 243 alla vite di fissaggio.
Coppia di serraggio: 80 - 100 Nm
NOTA. rispettare la posizione segnata in precedenza.

D Die Halterung der Hydraulikleitungen auf dem mittleren Gehäuse montieren.
LOCTITE 243 auf die Befestigungsschraube geben.
Anzugsmoment: 80 - 100 Nm
HINWEIS: Die zuvor markierte Position einhalten.

E Montar sobre la caja central el soporte de los conductos hidráulicos.
Aplicar LOCTITE 243 en los tornillos de fijación.
Anzugsmoment: 80 - 100 Nm
NOTA. Respetar la posición indicada antes.

F Monter sur la boîte centrale le support des conduites hydrauliques.
Appliquer de la LOCTITE 243 à la vis de fixation.
Couple de serrage: 80 - 100 Nm
REMARQUE : respecter la position précédemment repérée.

b

I Fissare il gruppo valvole.
Applicare LOCTITE 243 alla vite di fissaggio.
Avvitare le viti di fissaggio e serrare ad una coppia di 80 - 100 Nm.

D Fixieren Sie das Ventilaggregat.
LOCTITE 243 auf die Befestigungsschraube geben.
Die Befestigungsschrauben eindrehen und mit Anzugsmoment 80 - 100 Nm festziehen.

E Fijar el grupo de válvulas.
Aplicar LOCTITE 243 en los tornillos de fijación.
Fijar los tornillos de fijación y apretar con un par de 80 - 100 Nm.

F Fixer le groupe de soupapes.
Appliquer de la LOCTITE 243 à la vis de fixation.
Visser les vis de fixation et serrer à un couple de 80 - 100 Nm.

c

I Fissare il vaso di espansione al supporto.
Coppia di serraggio: 90 - 110 Nm

D Fixieren Sie das Ausdehnungsgefäß am Gestell.
Anzugsmoment: 90 - 110 Nm

E Fijar el vaso de expansión al soporte.
Anzugsmoment: 90 - 110 Nm

F Fixer le vase d'expansion au support.
Couple de serrage: 90 - 110 Nm

d

I Fissare il vaso di espansione.
Applicare LOCTITE 243 alla vite di fissaggio.
Avvitare le viti di fissaggio e serrare ad una coppia di 80 - 100 Nm.

D Fixieren Sie das Ventilaggregat.
LOCTITE 243 auf die Befestigungsschraube geben.
Die Befestigungsschrauben eindrehen und mit Anzugsmoment 80 - 100 Nm festziehen.

E Fijar el grupo de válvulas.
Aplicar LOCTITE 243 en los tornillos de fijación.
Fijar los tornillos de fijación y apretar con un par de 80 - 100 Nm.

F Fixer le groupe de soupapes.
Appliquer de la LOCTITE 243 à la vis de fixation.
Visser les vis de fixation et serrer à un couple de 80 - 100 Nm.

e

I Fissare adeguatamente i raccordi idraulici.
Coppia di serraggio: 90 - 110 Nm
NOTA. Rispettare la posizione segnata in precedenza

D Fixieren Sie die Wasseranschlussstücke auf angemessene Weise.
Anzugsmoment: 90 - 110 Nm
HINWEIS: Die zuvor markierte Einbaulage einhalten

E Fijar adecuadamente los racores hidráulicos.
Par de torsiòn: 90 - 110 Nm
NOTA. Respetar la posición indicada antes

F Fixer les raccords hydrauliques de façon appropriée.
Couple de serrage: 90 - 110 Nm
REMARQUE: Respecter la position précédemment repérée

f

I Posizionare le tubazioni idrauliche sul supporto.
Bloccare in posizione con piastra e vite.
NOTA. rispettare la posizione segnata in precedenza.

D Die Hydraulikleitungen auf der Halterung positionieren.
Mit der Platte und den Schraube festspannen.

E Colocar los conductos hidráulicos sobre el soporte.
Bloquear en posición con placa y tornillo.

F Positionner les conduites hydrauliques sur le support.
Bloquer en position avec plaque et vis.

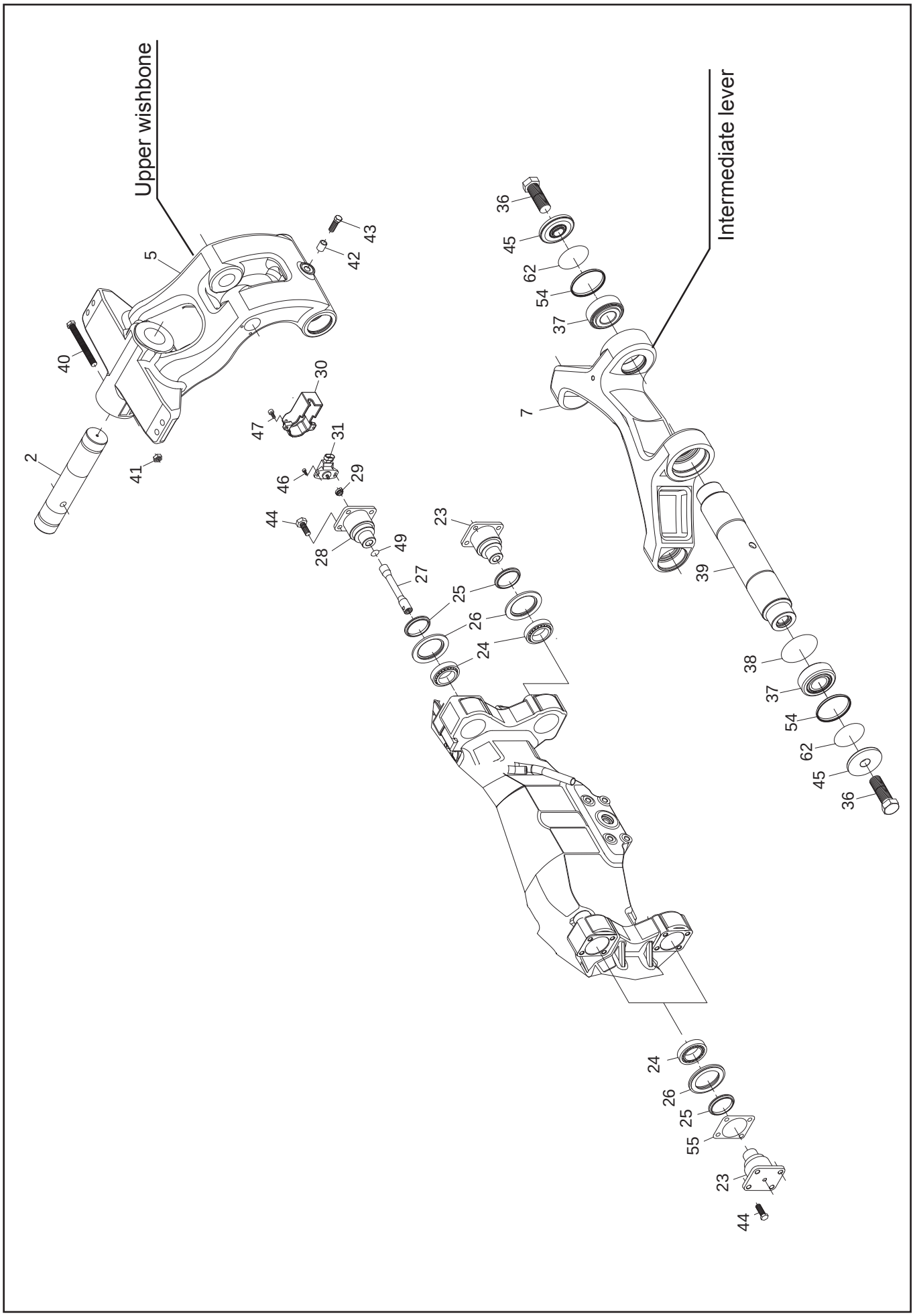
Upper wishbone
Intermediate lever
2
5
7
23
24
25
26
27
28
29
30
31
36
37
38
39
40
41
42
43
44
45
46
47
49
54
55
62

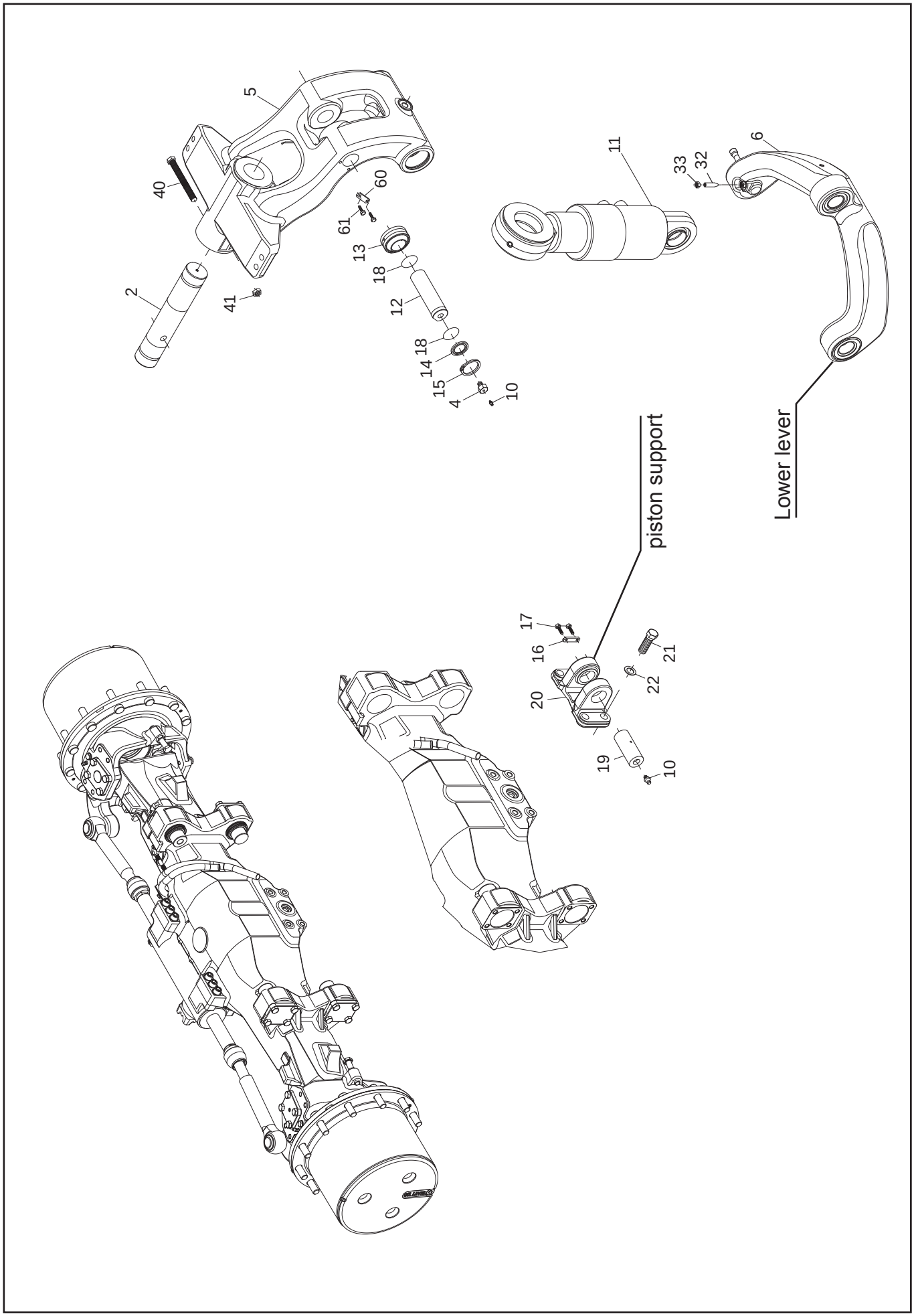
5
40
2
41
60
61
13
18
12
18
14
15
4
10
11
33
32
6
piston support
Lower lever
17
16
20
19
10
21
22

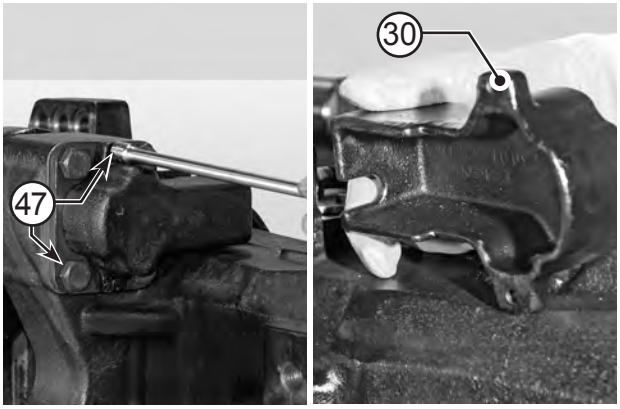

GB a

Unloose and remove the screws (47) and the cover (30).

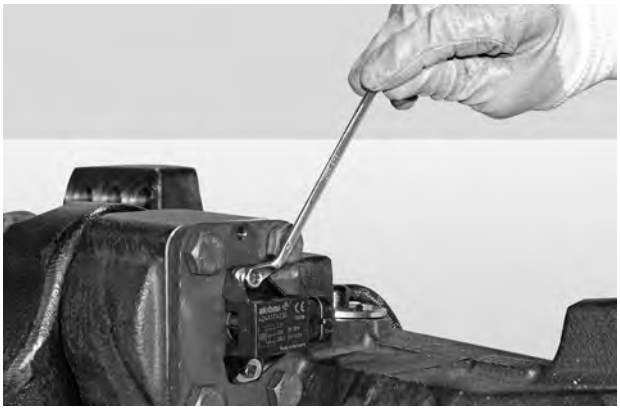

GB b

Tighten the screws (46) fastening the suspension sensor.
WARNING! When reinstalling the suspension sensor after removal from its mounting, the sensor must always be adjusted correctly, failure to adjust the sensor may lead to damage or injury.

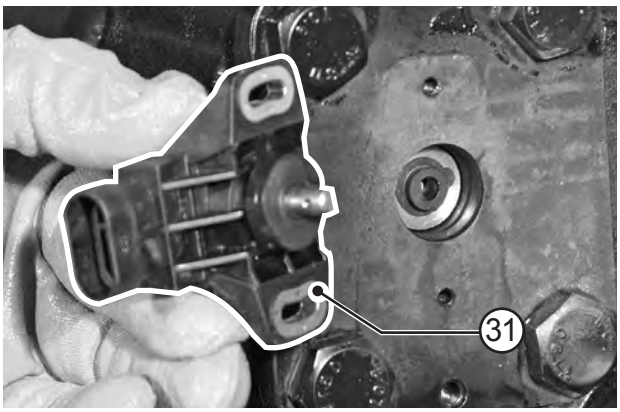

GB c

Remove the suspension sensor (31).

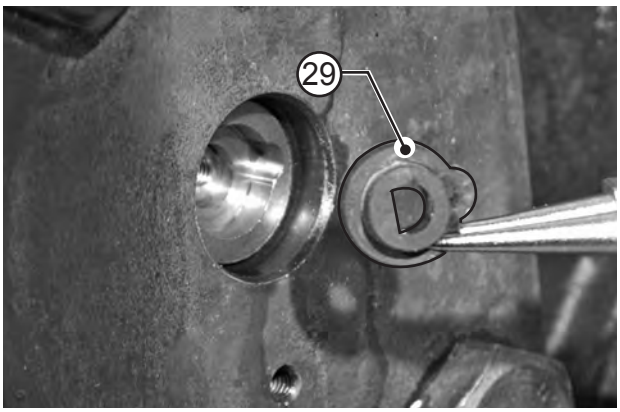

GB d

Remove the rubber joint (29).

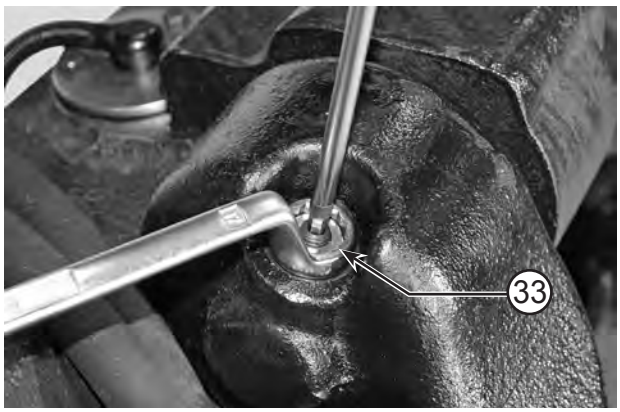

GB e

Unloose and remove the bolt (33) .

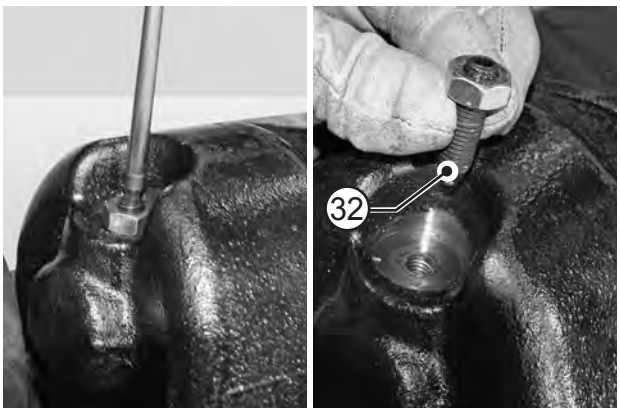

GB f

Unloose and remove the fittin screw (32).

a

I Rimuovere le viti di fissaggio (47) e il coperchio di protezione (30).

D Schraube (47) und Schutzblech (30) abschrauben.

E Aflojar y extraer los tornillos (47) y la proteccion (30).

F Desserrer et enlever les vis (47) les protection en tole (30).

b

I Rimuovere le viti di fissaggio (46) del sensore sospensione.

ATTENZIONE! Una volta rimosso il sensore dalla sede, in fase di montaggio é obbligatorio procedere alla registrazione, ***la mancata regolazione dello stesso potrebbe causare danni a persone o cose.***

D Die Befestigungsschrauben (46) den Sensor der Aufhängung entfernen.

ACHTUNG! Wenn den Sensor der Aufhängung abmontiert wird, ist er beim Einbauen wieder einzustellen. Anderenfalls können Sach- oder Personenschäden verursacht werden.

E Retirar los tornillos de fijación (46) del sensor de suspensión.

¡ATENCIÓN! Una vez retirado el sensor de suspensión de su sitio, en fase de montaje es obligatorio proceder al ajuste. El no ajuste del mismo podría causar daños a personas o cosas.

F Enlever les vis de fixation (46) du capteur de la suspension.

ATTENTION ! Après avoir enlevé le capteur de la suspension de son logement, en phase de montage il est obligatoire de procéder à son réglage, le non-réglage de ce dernier risquerait de causer des dommages aux personnes et/ou aux choses.

c

I Rimuovere il sensore sospensione (31).

D Den Sensor (31) der Aufhängung ausbauen.

E Retirar el sensor (31) de suspensión.

F Enlever le capteur (31) de suspension.

d

I Rimuovere il giunto in gomma (29).

D Gelenk (29) abnehmen.

E Remover la junta (29).

F Enlever le joint (29).

e

I Allentare e rimuovere il dado (33).

D Mutter (33) abschrauben.

E Aflojar y extraer la tuerca (33).

F Desserrer et enlever l'écrou (33).

f

I Allentare ed asportare la vite di ritegno (32).

D Schrauben (32) lockern und abschrauben.

E Aflojar y sacar los tornillo (32).

F Desserrer et enlever le vis (32).

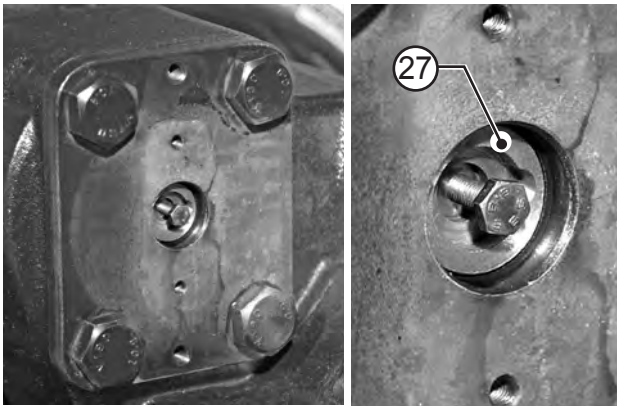

GB a

Screw a fitting screw into the sensor drag shaft (27).

GB b

Remove the drag shaft of the sensor (27).

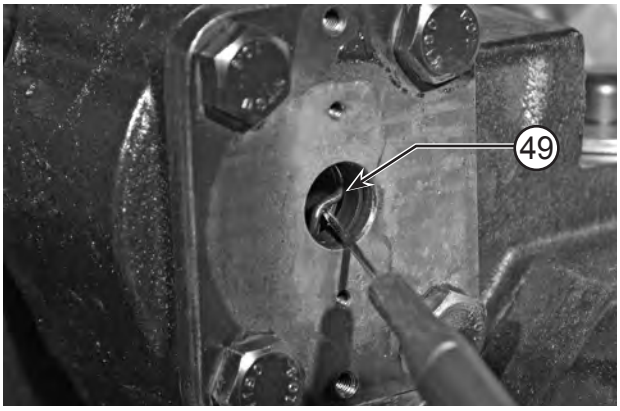

GB c

Exchange the O-ring (49).

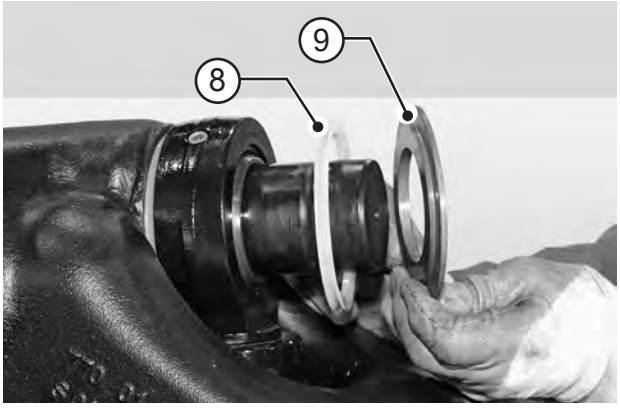

GB d

Remove the front sealing ring (8) and centre ring (9).

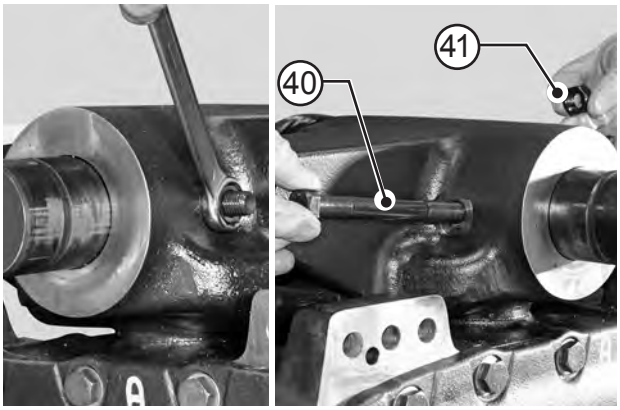

GB e

Unloose and remove the bolt (41) and remove the fittin screw (40).

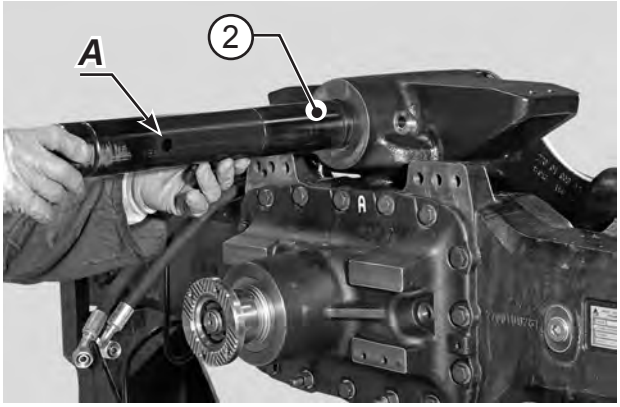

GB f

Remove the upper pin (2).
Mark the position on the head of intermediate pin of the position pin seat ***"A"***.

a

I Avvitare nell'asta di trascinamento sensore (27) una vite di fissaggio.

D Schrauben Sie eine Fixierschraube am Mitnehmer-zapfen des Sensors (27) an.

E Atornillar en la varilla de arrastre del sensor (27) un tornillo de fijación.

F Visser une vis de fixation sur la tige d'entraînement (27).

b

I Rimuovere l'asta di trascinamento sensore (27).

D Nehmen Sie den Mitnehmerzapfen des Sensors (27) ab.

E Quitar la varilla de arrastre del sensor (27).

F Retirer la tige d'entraînement du senseur (27).

c

I Sostituire anello O-Ring (49).

D Den O-Ring (49) ersetzen.

E Substituir el anillo O-Ring (49).

F Remplacer la condition O-Ring (49).

d

I Rimuovere l'anello di tenuta frontale (8) e anello centratore (9).

D Frontalem Kolbenring (8) und den Zentrierring (9) abnehmen.

E Remover completa de segmento de compresiòn fron-tal (8) y el anillo de centraje (9).

F Enlever la bague d'ètanchéité frontal (8) et l'anneau de centrage (16).

e

I Allentare e rimuovere il dado (41) ed asportare la vite di ritegno (40).

D Mutter (41) abschrauben und Schrauben (40) lockern.

E Aflojar y extraer la tuerca (41) y sacar los tornillo (40).

F Desserrer et enlever l'écrou (41) et enlever le vis (40).

f

I Rimuovere il perno superiore (2) dalla leva superiore. Segnare sulla testa del perno superiore la posizione della sede del perno ***"A".***

D Die obere Kegelstifte (2) abnehmen.
Auf dem Kopf des oberen Bolzens die Position der Aufnahme des Bolzens ***"A"*** markieren

E Remover lo perno superior (2) de la palanca superior. Marcar en la cabeza del perno superior la posición del alojamiento del perno ***"A"***.

F Remover le pivot supérieur (2).
Faire un signe sur la tête du pivot supérieur pour indi-quer la position du logement du pivot ***"A".***

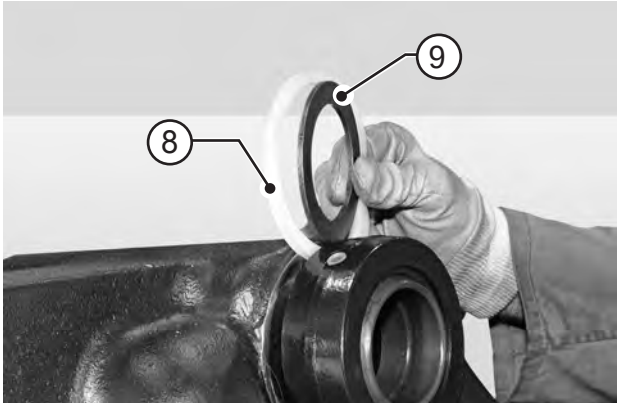

GB a

Remove the front sealing ring (8) and centre ring (9).

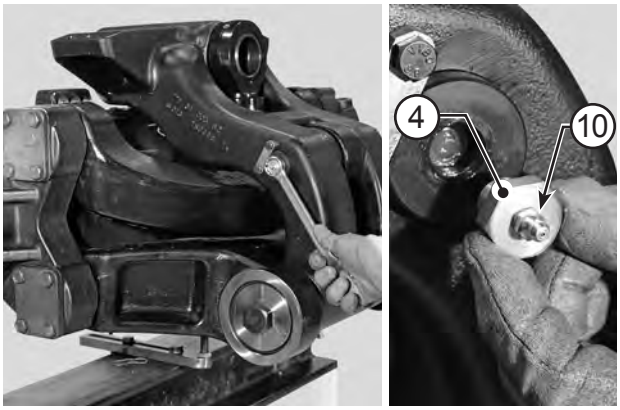

GB b

Remove the plug (4) complete with grease pin (10).

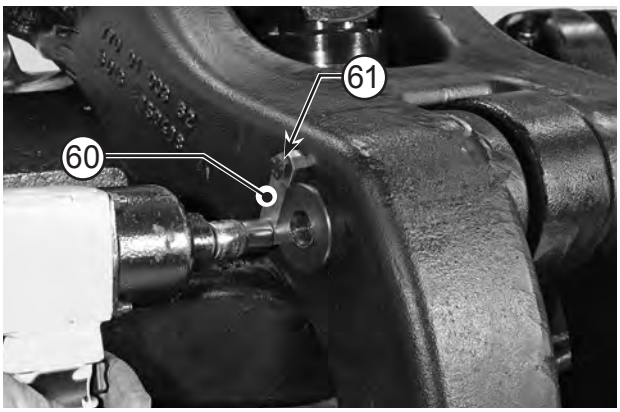

GB c

Remove screw (61) and safety plate (60).

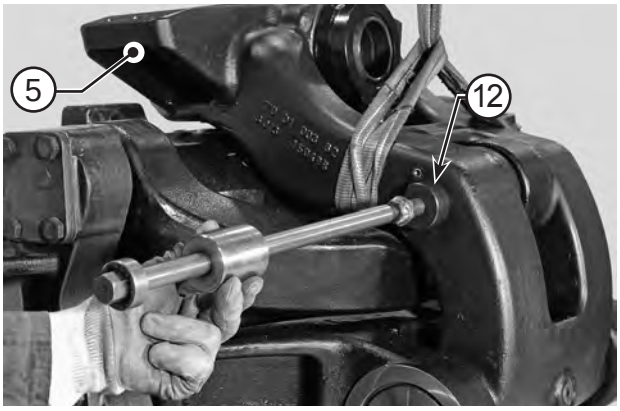

GB d

Harness and balance the upper wishbone (5), and attach to a hoistput the rod under slight tension. Screw a threated bar on a extractor, end remove the articulation pin (12).

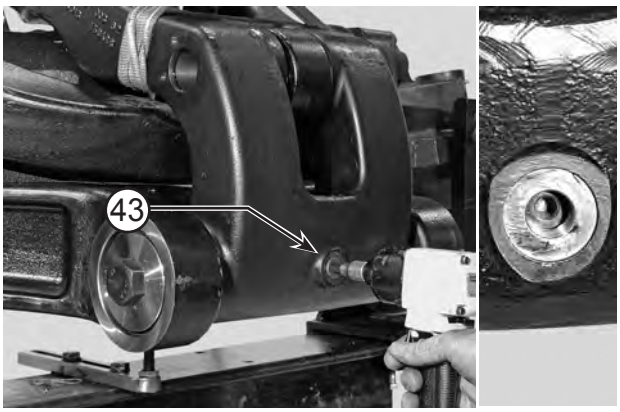

GB e

Remove the plug (43).

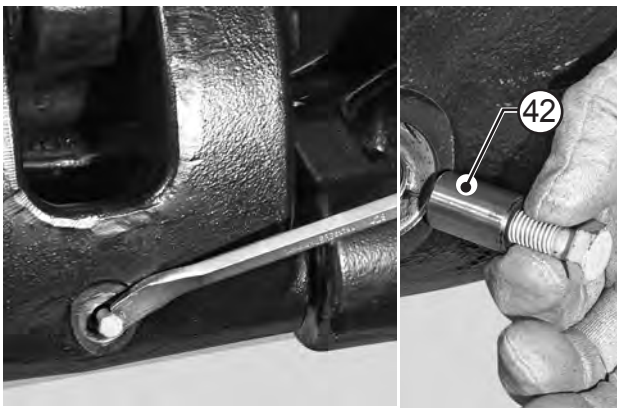

GB f

Using a screw M6 remove the bolt (42).

a

I Rimuovere l'anello di tenuta frontale (8) e anello centratore (9).

D Frontalem Kolbenring (8) und den Zentrierring (9) abnehmen.

E Remover completa de segmento de compresiòn frontal (8) y el anillo de centraje (9).

F Enlever la bague d'ètanchéité frontal (8) et l'anneau de centrage (16).

b

I Rimuovere il tappo (4) completo dell'ingrassatore (10).

D Entluefter (4) und die Schmierbüchse (10) abschrauben.

E Remover el tapon (4) y engrasador (10).

F Enlever le reniflard (4) et legraisseur (10).

c

I Smontaggio viti (61) e fermo (60).

D Die Schraube (61) und Sicherheit (60) abnehmen.

E Remover los tornillos (60) y seguridad (61).

F Retirer la vis (60) et arrét de sùréte (61).

d

I Imbragare e bilanciare la leva superiore (5) e collegarla ad un mezzo di sollevamento, mettere in leggera tensione la fune. Avvitare una barra filettata su un estrattore e rimuovere il perno snodo (12).

D Den obere Hebel (5) einschlingen, ausgleichen und mit einer Hubvorrichtung anschlagen und das Seil spannen. Auf dem Abzieher die Gewindstange festschrauben und den Gelenkstift (12) abnehmen.

E Embragar y equilibrar la palanca superior (5) y conectarlo a un medio elevador y poner en tensión ligera el cable.. Atornillar una barra roscada en un extractor y remover la rótula (12).

F Élinguer et équilibrer le levier supérieur (5) puis le relier à un moyen de levage et mettre légèrement en tension lacorde. Sur l'extracteur visser une barre filetée et enlever la boîtier d'articulation (12).

e

I Rimuovere tappo (43).

D Entluefter (43) abnehmen.

E Remover (43) el tapon.

F Enlever le reniflard (43).

f

I Con una vite M6 estrarre il perno (42).

D Mit einer Schraube M6, die Bolzen (42) herausziehen.

E Utilizando una vid M6 extraer los perno (42).

F A l'aide d'una vis M6 extraire le pivot (42).

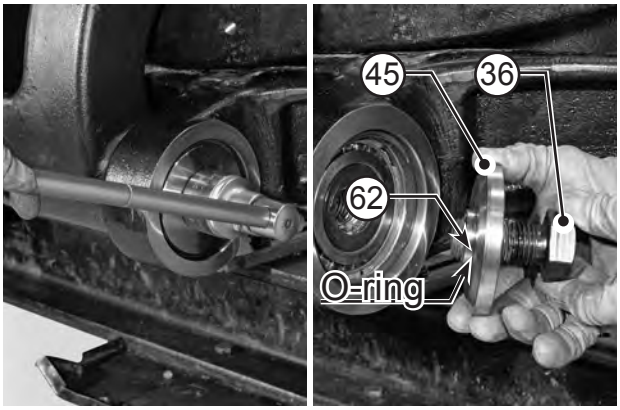

GB a

REPEAT ON BOTH SIDES.
Loose the fixing bolt (36) of lower pin (39).
Remove the bolt (36) complete with spacer (45) and O-ring (62).

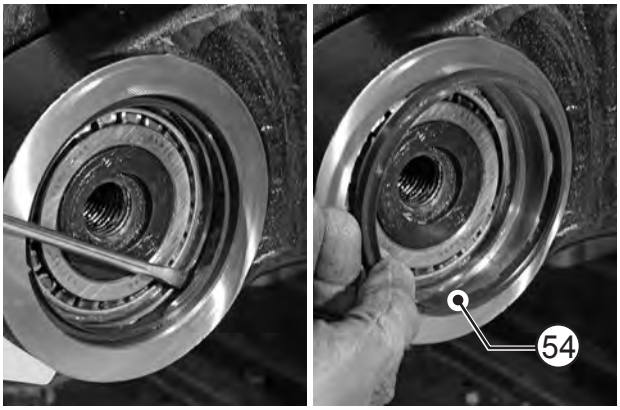

GB b

REPEAT ON BOTH SIDES.
Remove the scraper rings (54).
NOTE. 1 - All seals must be replaced every time the unit is disassembled.
2 - Particular attention must be paid not to damage the seats of both seals.

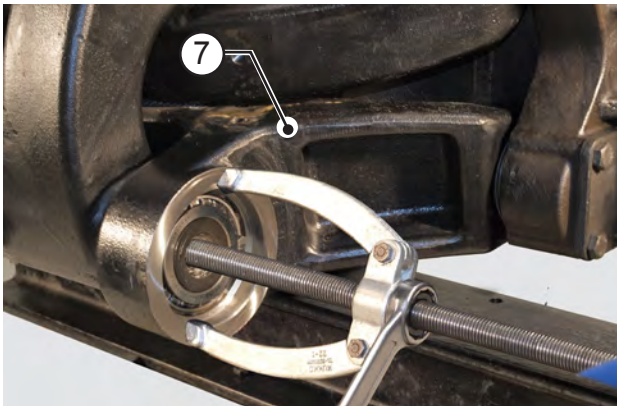

GB c

Fit a suitable extractor onto lower wishbone (7) on left side, as shown in the picture, to disassembly the bearing (37) on hte opposite side.

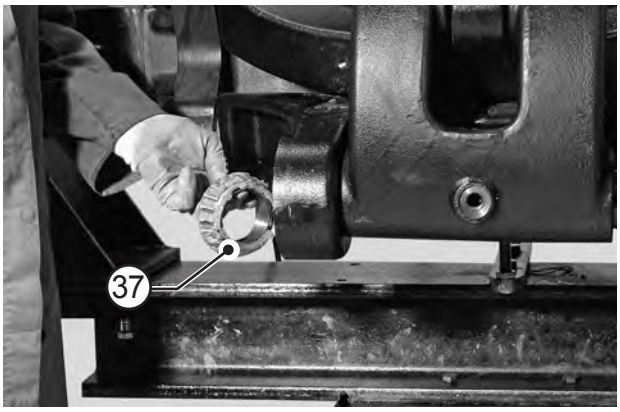

GB d

Remove thrust block (37) from right side.

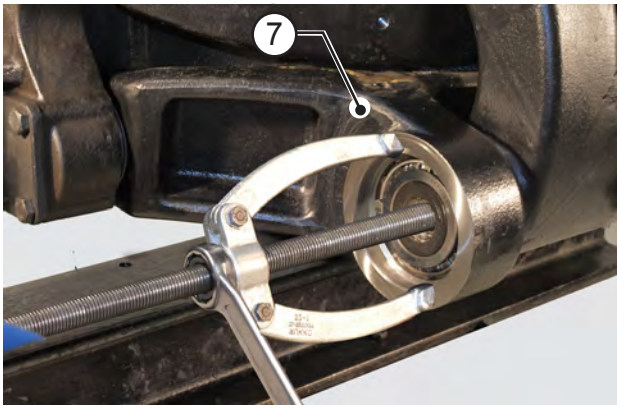

GB e

Fit a suitable extractor on the lower wishbone (7) on right side, as shown in the picture, to disassembly the bearings (37) and thrust block on the left side.

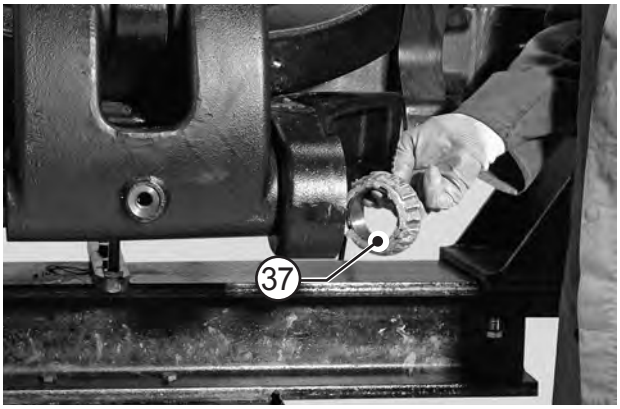

GB f

Remove the bearing (37).

a

I **RIPETERE L'OPERAZIONE SU ENTRAMBE I LATI.**
Allentare e rimuovere la vite di fissaggio (36) completa di distanziale (45) e anello O-ring (62).

D **WIEDERHOLEN SIE DIESEN VORGANG AN BEIDEN SEITEN.**
Die Befestigungsschraube (36) mit Distanzstück (45) und O-RInge (62) lockern und entfernen.

E **REPETIR LA OPERACIÓN EN AMBOS LADOS.**
Aflojar y quitar el tornillo de fijación (36) completo con distancial (45) y la junta OR (62).

F **EFFECTUER CETTE MÊME OPÉRATION SUR LES DEUX CÔTÉS.**
Desserrer et enlever la vis de fixation (36) avec la bague d'espacement (45) et le garniture OR (62).

b

I **RIPETERE L'OPERAZIONE SU ENTRAMBE I LATI.**
Rimuovere gli anelli raschiatori (54).
NOTA. 1 - Tutte le tenute devono essere sostituite ad ogni smontaggio. 2 - Prestare molta attenzione per non rovinare le sedi delle guarnizioni.

D **WIEDERHOLEN SIE DIESEN VORGANG AN BEIDEN SEITEN.**
Abschaber (54) wegnehmen.
BEMERKUNG. 1 - Alle Dichtungen müssen jedesmal gewechselt werden. 2 - Sehr vorsichtig vorgehen, um die Dichtungs.

E **REPETIR LA OPERACIÓN EN AMBOS LADOS.**
Remover los anillos raspadores (54).
NOTA. 1 - Todas las estanqueidades tienen que ser sustituidas a cada desmontaje. 2 - Tener mucho cuidado a fin de no dañar los alojamientos de las juntas y del deslizamiento del pistón.

F **EFFECTUER CETTE MÊME OPÉRATION SUR LES DEUX CÔTÉS.**
Enlever les anneaux racleurs (54).
NOTE. 1 - Toutes les étanchéités doivent être remplacées à chaque démontage. 2 - Faire très attention à ne pas abîmer les logements des garnitures.

c

I Posizionare come mostrato i figura, un estrattore sul lato sinistro della leva inferiore (7) per disassemblare il cuscinetto (37) sul lato opposto.

D Laut Abbildung eine Ausziehvorrichtung an der linken Seite dem unteren Hebel (7) ansetzen, um das Lager (37) auf der gegenüber liegenden Seite zu zerlegen.

E Como se ilustra en la figura, posicionar un extractor en el lado izquierdo de la palanca inferior (7) para desensamblar el cojinete (37) en el lado opuesto.

F Positionner un extracteur, comme le montre la figure, du côté gauche du levier inférior (7) pour démonter le palier (37) de l'autre côté.

f

I Rimuovere la ralla esterna del cuscinetto (37) lato destro.

D Die Gehäusescheibe des rechten Lagers (37) entfernen.

E Remover la corona de giro externa del cojinete (37) lado derecho.

F Enlever la sellette à l'extérieur du palier (37) du côté droit.

e

I Posizionare un estrattore sul lato destro della leva inferiore (7) per rimuovere ralla e cuscinetto (37) sul lato sinistro.

D Eine Ausziehvorrichtung an der rechten Seite dem unteren Hebel (7) ansetzen, um die Gehäusescheibe und das Lager (37) auf der linken Seite zu entfernen.

E Posicionar un extractor en el lado derecho de la palanca inferior (7) para quitar la corona de giro y el cojinete (37) en el lado izquierdo.

F Positionner un extracteur du côté droit du levier inférior (7) pour enlever la sellette et le palier (37) du côté gauche.

f

I Rimuovere il cuscinetto (37).

D Das Lager (37) abnehemen.

E Remover el cojinette (37).

F Enlever le palier (37).

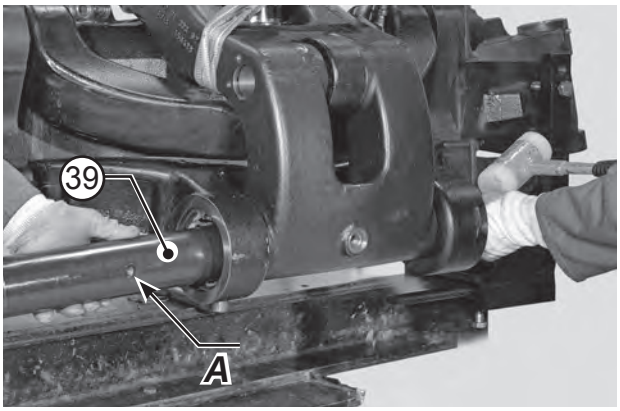

GB a

Use a punch with a suitable length to drive out the lower pin (39).
Extract the pin completely (39).
Mark the position on the head of lower pin (39) of the position pin seat ***"A"***.

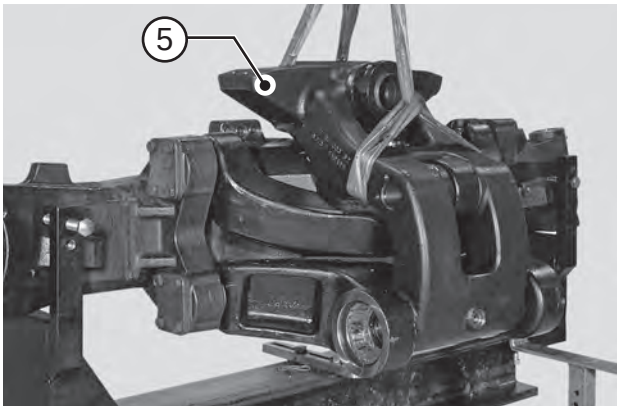

GB b

Harness and balance the upper wishbone (5), and attach to a hoist.
Remove the upper wishbone (5) and the O-ring (18) and (38).

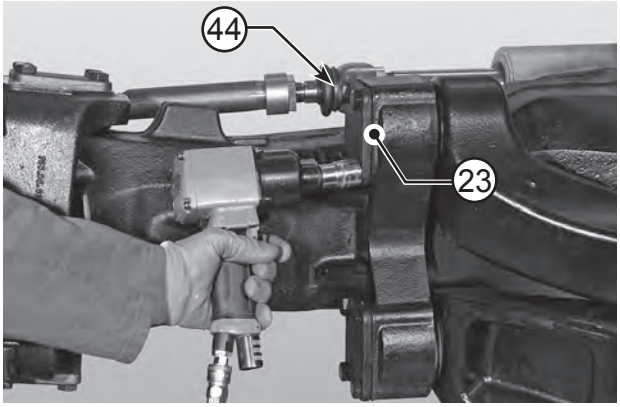

GB c

REPEAT ON BOTH SIDES.
Unloose and remove the fittin screws (44) from the articulation pin (23).

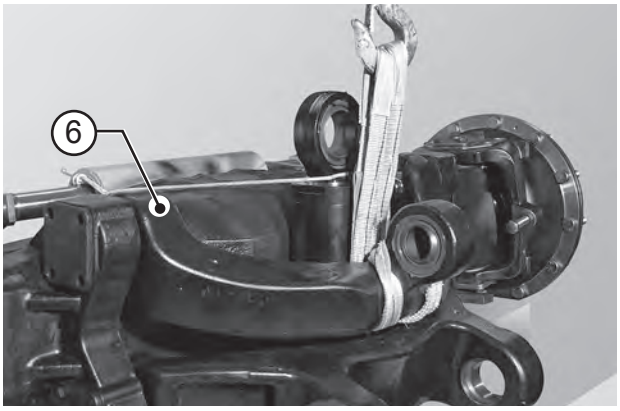

GB d

Sling the entire unit (6) and connect it to the hoist, putting the rod under light tension.

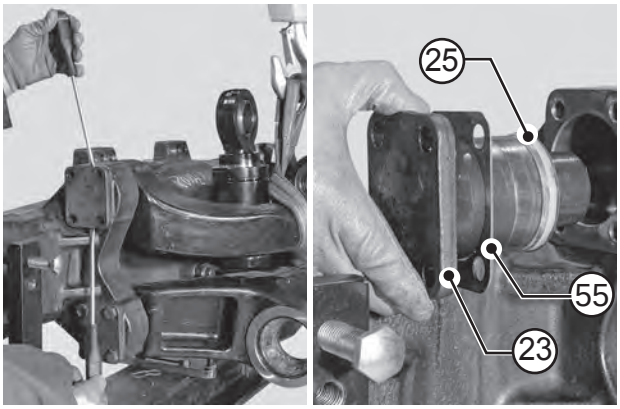

GB e

Using two levers, remove the articulation pin (23) complete with front seal (25) and shims (55) .
Pay attention not to damage the surfaces.

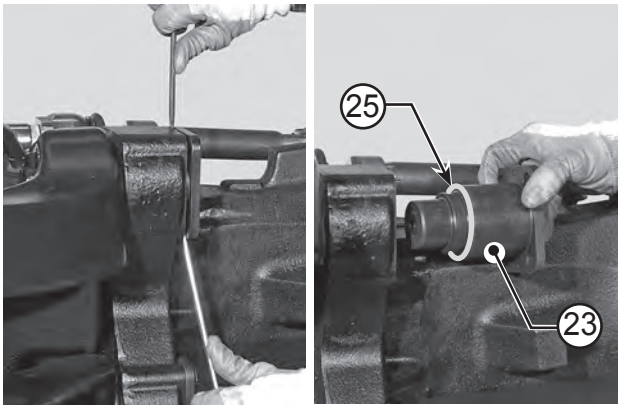

GB f

Using two levers, remove the articulation pin (23) complete with front seal (25).
Pay attention not to damage the surfaces.

a

I Utilizzando un punzone di lunghezza adatta rimuovere il perno inferiore (39). Estrarre completamente il perno (39).
Segnare sulla testa del perno inferiore (39) la posizione della sede del perno ***"A".***

D Mit einem angemessen langen Stempel den unteren Bolzen (39) entfernen.
Nehmen Sie den Stift (39) vollständig heraus .
Auf dem Kopf den unteren Bolzen (39) die Position der Aufnahme des Bolzens ***"A"*** markieren.

E Usando un punzón de longitud apropiada, quitar el perno inferior (39).
Extraer completamente el pivote (39).
Marcar en la cabeza del perno inferior (39) la posición del alojamiento del perno ***"A"***.

F Enlever le pivot inférior (39) en utilisant un poinçon de longueur appropriée.
Extraire complètement l'axe (39).
Faire un signe sur la tête du pivot inférior (39) pour indiquer la position du logement du pivot ***"A".***

b

I Imbragare e bilanciare la leva superiore (5) e collegarlo ad un mezzo di sollevamento.
Rimuovere la leva superiore (5) e anello O-Ring (18) e (38).

D Den obere Hebel (5) einschlingen, ausgleichen und mit einer Hubvorrichtung anschlagen.
Nehmen Sie den oberen Hebel ab (5) und den O-Ring (18)(38).

E Embragar y equilibrar la palanca superior (5) y conectarlo a un medio elevador.
Quitar la palanca superior (5) y el el anillo O-Ring (18) (38).

F Élinguer et équilibrer le levier supérieur (5) puis le relier à un moyen de levage.
Retirer le levier supérieur (5) et le bague O-Ring (18) (38).

c

I **RIPETERE L'OPERAZIONE SU ENTRAMBE I LATI.**
Allentare ed asportare le viti di ritegno (44) del perno snodo (23).

D **WIEDERHOLEN SIE DIESEN VORGANG AN BEIDEN SEITEN.**
Schrauben (44) des Gelenkstiftes (23) lockern und der Distanzstücke (55) und abschrauben.

E **REPETIR LA OPERACIÓN EN AMBOS LADOS.**
Aflojar y sacar los tornillos de retención (44) de la rótula (23).

F **EFFECTUER CETTE MÊME OPÉRATION SUR LES DEUX CÔTÉS.**
Desserrer et enlever les vis de fixation (44) du tourillon d'articulation (23).

d

I Imbragare il gruppo completo (6) e collegarlo al mezzo di sollevamento mettendo in leggera tensione la fune.

D Komplettes Aggregat (6) anschlagen und an das Hebemittel hängen. Das Seil spannen.

E Eslingar el grupo completo (6) y conectarlo al medio de elevación con el cable en ligera tensión.

F Elinguer le groupe complet (6) puis le hisser au moyen de relevage en tendant légérement la corde.

e

I Utilizzando due leve, rimuovere il perno snodo (23) completo di guarnizione frontale (25) e spessori (55)
Prestare attenzione per non rovinare i piani.

D Mit Hilfe von zwei Hebeln, Gelenkstift (23) samt frontalem Kolbenring (25) und der Distanzstücke (55) abnehmen. Achtung, die Flächen nicht verkratzen.

E Utilizando dos palancas, remover la ròtula (23) completa de junta frontal (25) y los espesores (55).
Tener cuidado a fin de no estropear las superficies.

F A l'aide de deux leviers, enlever le tourillon d'articulation (23) équipé de la garniture frontale (25) et les cales (55).
Faire trés attention de ne pas abîmer les plateaux.

f

I Utilizzando due leve, rimuovere il perno snodo (23) completo di guarnizione frontale (25).
Prestare attenzione per non rovinare i piani.

D Mit Hilfe von zwei Hebeln, Gelenkstift (23) samt frontalem Kolbenring (25) abnehmen.
Achtung, die Flächen nicht verkratzen.

E Utilizando dos palancas, remover la ròtula (23) completa de junta frontal (25).
Tener cuidado a fin de no estropear las superficies.

F A l'aide de deux leviers, enlever le tourillon d'articulation (23) équipé de la garniture frontale (25).
Faire trés attention de ne pas abîmer les plateaux.

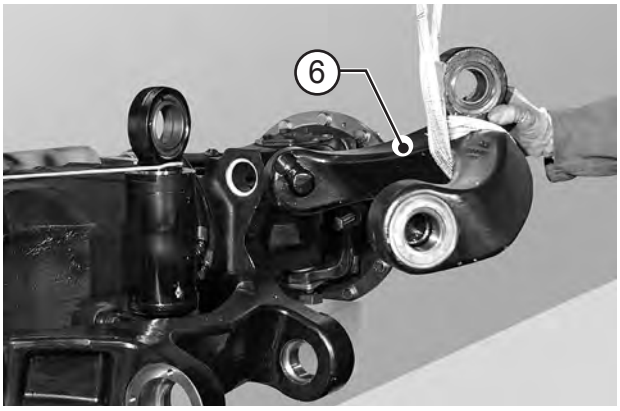

GB a

Harness and balance the intermediate wishbone (6), and attach to a hoist.
Remove the intermediate wishbone (6).

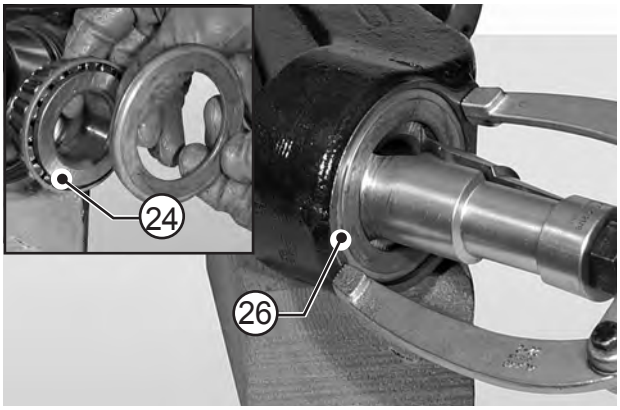

GB b

Repeat on both sides.
Using a puller for inner parts, remove the frictional resistance ring (26) and bearing (24).

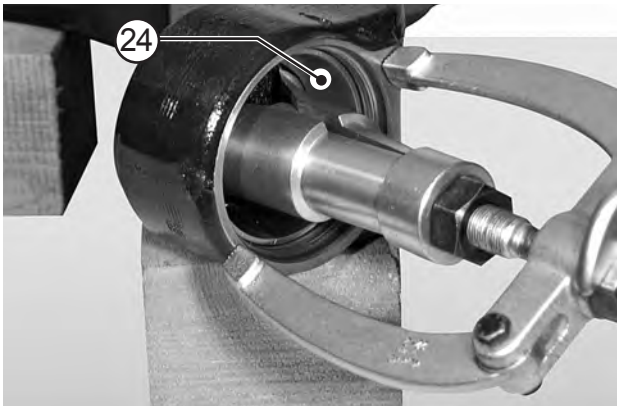

GB c

Repeat on both sides.
Using a puller for inner parts, remove the thrust block (24).

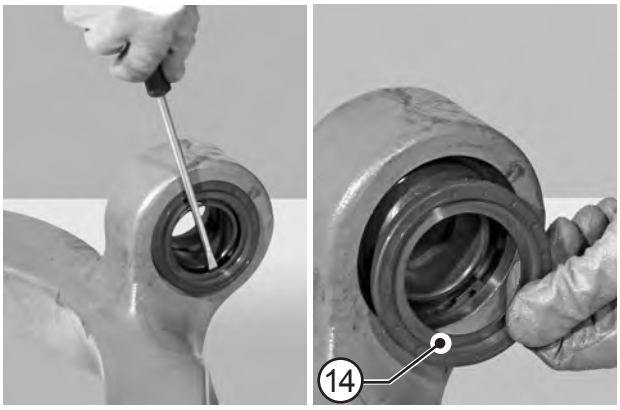

GB d

Remove the sealing ring (14).
Repeat on both sides.

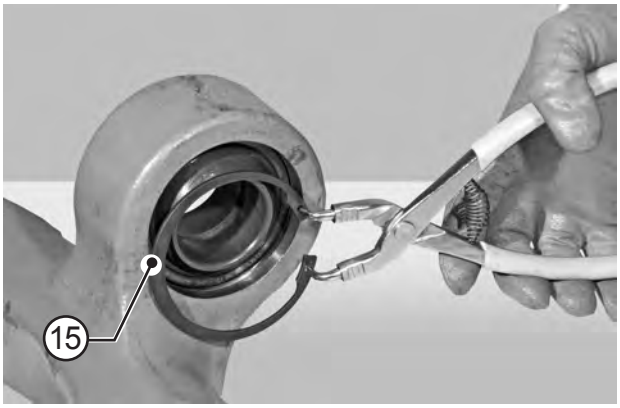

GB e

Remove the snap rings (15).
Repeat on both sides.

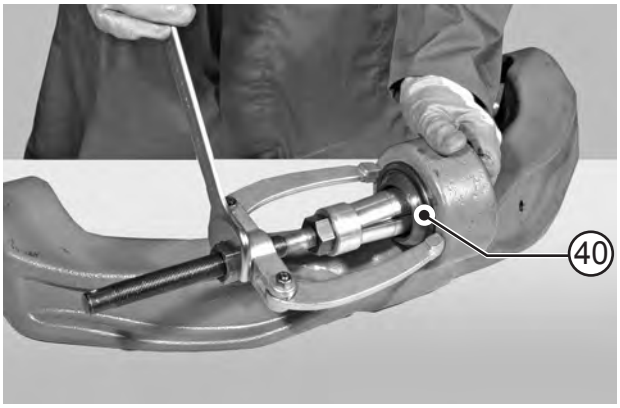

GB f

Using a threaded rod and an extractor, remove the bushing (13).

a

I Imbragare e bilanciare la leva intermedia (6) e collegarlo ad un mezzo di sollevamento.
Rimuovere la leva superiore (6).

D Wiederholen Sie diesen Vorgang an beiden Seiten.
Der Zwischenhebel (6) einschlingen, ausgleichen und mit einer Hubvorrichtung anschlagen.
Nehmen Sie der Zwischenhebel ab (6).

E Repetir la operación en ambos lados.
Embragar y equilibrar la palanca intermedia (6) y conectarlo a un medio elevador.
Quitar la palanca superior (6).

F Effectuer cette même opération sur les deux côtés.
Élinguer et équilibrer le levier intermédiaire (6) puis le relier à un moyen de levage.
Retirer le levier intermédiaire (6).

b

I Ripetere l'operazione su entrambe i lati.
Utilizzando un estrattore per interni, rimuovere l'anello antiusura (26) e cuscinetto (24).

D Wiederholen Sie diesen Vorgang an beiden Seiten.
Mit einem Abzieher, die obere Verschleissfestigkeit Ring (26) und das Lager (24) herausnehmen.

E Repetir la operación en ambos lados.
Utilizando un extractor, remover l'anillo antiusure (26) y el cojinete (24).

F Effectuer cette même opération sur les deux côtés.
A l'aide d'un extracteur, enlever la anneau résitant à l'usure (26) et le palier (24).

c

I Ripetere l'operazione su entrambe i lati.
Utilizzando un estrattore per interni, rimuovere la ralla del cuscinetto (24).

D Wiederholen Sie diesen Vorgang an beiden Seiten.
Mit einem Abzieher, die Lager (24) herausnehmen.

E Repetir la operación en ambos lados.
Utilizando un extractor, remover la rangua (24).

F Effectuer cette même opération sur les deux côtés.
A l'aide d'un extracteur, enlever la crapaudine (24).

d

I Rimuovere l'anello di tenuta (14).
Ripetere l'operazione su entrambe i lati.

D Den Kolbenring abnehmen (14).
Wiederholen Sie diesen Vorgang an beiden Seiten.

E Remover el segmento de compresiòn (14).
Repetir la operación en ambos lados.

F Effectuer cette même opération sur les deux côtés.
Enlever la bague d'étanchéité (14).
Effectuer cette même opération sur les deux côtés.

e

I Asportare l'anello elastico (15).
Ripetere l'operazione su entrambe i lati.

D Haltering (15) abnehmen.
Wiederholen Sie diesen Vorgang an beiden Seiten.

E Sacar el anillo elastico (15).
Repetir la operación en ambos lados.

F Enlever l'anneau elastique (15).
Effectuer cette même opération sur les deux côtés.

f

I Tramite l'utilizzo di una barra filettata e di un estrattore, rimuovere la bussola (13).

D Mit einem Abzieher, Zwischenbuchse (13) abnehmen.

E Utilizando una varilla roscada y un extractor, remover el manguito (13).

F À l'aide d'une barre filetée et un extracteur, enlever le douille (13).

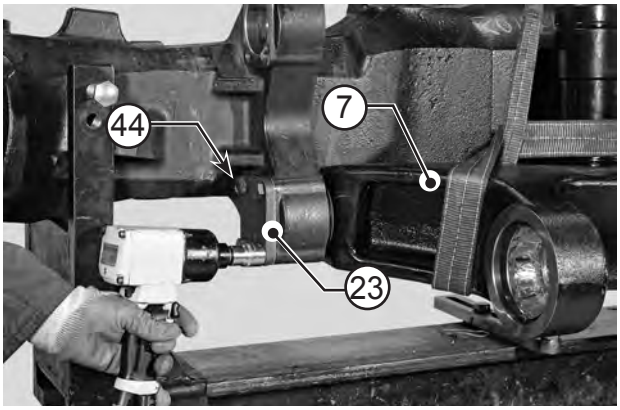

GB a

Sling the entire unit (7) and connect it to the hoist.
Unloose and remove the fittin screws (44) from the articulation pin (23).

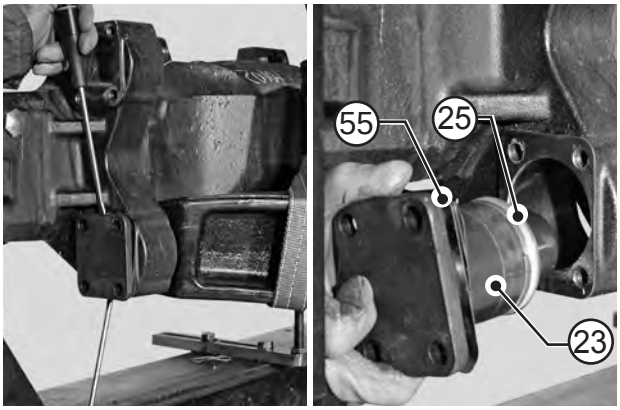

GB b

Using two levers, remove the articulation pin (23) complete with front seal (25) and shims (55).
Pay attention not to damage the surfaces.

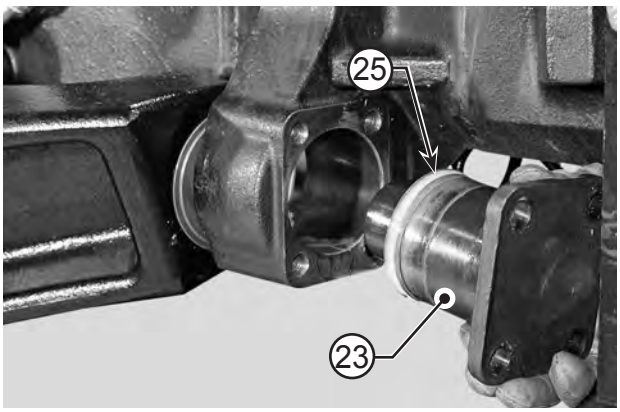

GB c

Using two levers, remove the articulation pin (23) complete with front seal (25).
Pay attention not to damage the surfaces.

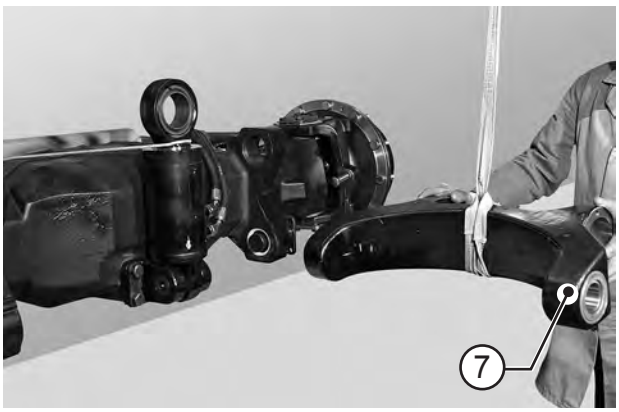

GB d

Remove the lower lever (7).

GB e

Using a puller for inner parts, remove the frictional resistance ring (26) and bearing (24).

GB f

Repeat on both sides.
Using a puller, remove the thrust block (24).

a

I Imbragare il gruppo completo (7) e collegarlo al mezzo di sollevamento. Allentare ed asportare le viti di ritegno (44) del perno snodo (23).

D Komplettes Aggregat (7) anschlagen und an das Hebemittel hängen.
Schrauben (44) des Gelenkstiftes (23) lockern und abschrauben.

E Eslingar el grupo completo (7) y conectarlo al medio de elevación.
Aflojar y sacar los tornillos de retención (44) de la rótula (23).

F Elinguer le groupe complet (7) puis le hisser au moyen de relevage.
Desserrer et enlever les vis de fixation (44) du tourillon d'articulation (23).

b

I Utilizzando due leve, rimuovere il perno snodo (23) completo di guarnizione frontale (25) e spessori (55). Prestare attenzione per non rovinare i piani.

D Mit Hilfe von zwei Hebeln, Gelenkstift (23) samt frontalem Kolbenring (25) und der Distanzstücke (55) abnehmen. Achtung, die Flächen nicht verkratzen.

E Utilizando dos palancas, remover la ròtula (23) completa de junta frontal (25) y los espesores (55). Tener cuidado a fin de no estropear las superficies.

F A l'aide de deux leviers, enlever le tourillon d'articulation (23) équipé de la garniture frontale (25) et les cales (55).
Faire trés attention de ne pas abîmer les plateaux.

c

I Utilizzando due leve, rimuovere il perno snodo (23) completo di guarnizione frontale (25).
Prestare attenzione per non rovinare i piani.

D Mit Hilfe von zwei Hebeln, Gelenkstift (23) samt frontalem Kolbenring (25)abnehmen.
Achtung, die Flächen nicht verkratzen.

E Utilizando dos palancas, remover la ròtula (23) completa de junta frontal (25).
Tener cuidado a fin de no estropear las superficies.

F A l'aide de deux leviers, enlever le tourillon d'articulation (23) équipé de la garniture frontale (25).
Faire trés attention de ne pas abîmer les plateaux.

d

I Rimuovere la leva inferiore (7).

D Das Hebemittel (7) hängen.

E Remover la palanca inferior (7).

F Extraer le levier inférieur (7)

e

I Utilizzando un estrattore per interni, rimuovere l'anello antiusura (26) e cuscinetto (24).

D Mit einem Abzieher, die obere Verschleissfestigkeit Ring (26) und das Lager (24) herausnehmen.

E Utilizando un extractor, remover l'anillo antiusure (26) y el cojinete (24).

F A l'aide d'un extracteur, enlever la anneau résitant à l'usure (26) et le palier (24).

f

I Ripetere l'operazione su entrambe i lati.
Utilizzando un estrattore, rimuovere la ralla del cuscinetto (24).

D Wiederholen Sie diesen Vorgang an beiden Seiten.
Mit einem Abzieher, die Lager (24) herausnehmen.

E Repetir la operación en ambos lados.
Utilizando un extractor, remover la rangua del cojinette (24).

F Effectuer cette même opération sur les deux côtés.
A l'aide d'un extracteur, enlever la crapaudine (24).

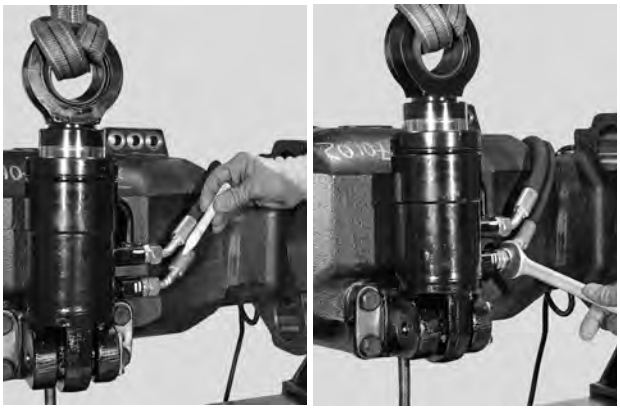

GB a

Sling the piston unit (11) and connect it to the hoist, putting the rod under light tension.
Loosen and remove hydraulic connectors.
NOTE: Mark the position of the hydraulic connectors.

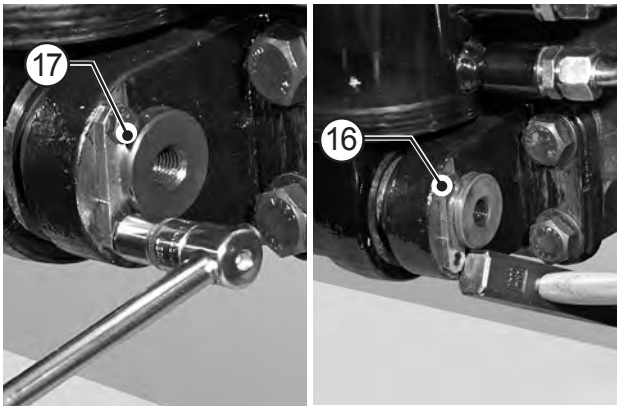

GB b

Remove screw (17) and safety plate (16).

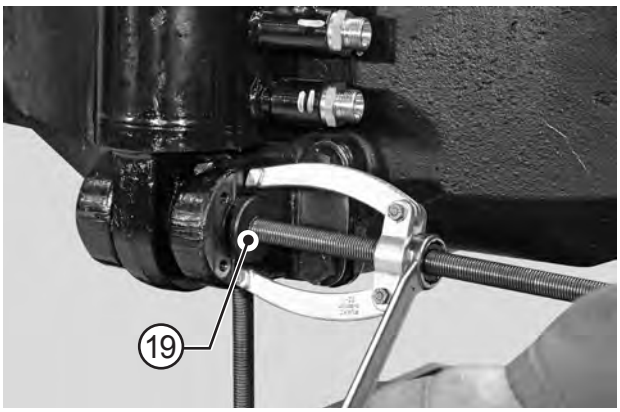

GB c

Screw a threated bar on a extractor, and remove the articulation pin (19).

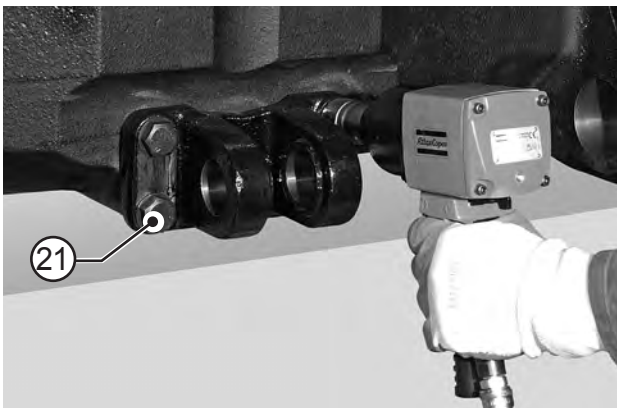

GB d

Unloose and remove the fittin screws (21).

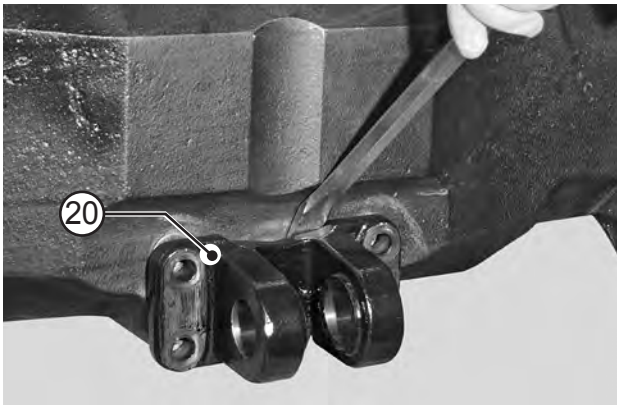

GB e

Remove the support (20).

a

I Imbragare il gruppo pistone (11) e collegarlo al mezzo di sollevamento mettendo in leggera tensione la fune. Allentare e rimuovere i raccordi idraulici.
NOTA: Contrassegnare la posizione dei raccordi idraulici.

D Der Kolben Aggregat (11) anschlagen und an das Hebemittel hängen. Das Seil spannen. Lösen Sie die Wasseranschlussstücke und nehmen Sie diese ab.
BEMERKUNG: Position die Wasseranschlussstücke markieren

E Eslingar el grupo pistón (11) y conectarlo al medio de elevación con el cable en ligera tensión. Aflojar y quitar los racores hidráulicos.
NOTA: Marcar la posición de los racores hidráulicos.

F Elinguer le groupe piston (11) puis le hisser au moyen de relevage en tendant légérement la corde. Desserrer et enlever les raccords hydrauliques.
NOTE: Marquer la position du les raccords hydrauliques.

b

I Rimuovere viti (17) e fermo (16).

D Die Schraube (17) und Sicherheit (16) abnehmen.

E Remover los tornillos (17) y seguridad (16).

F Retirer la vis (17) et arrét de sùréte (16).

c

I Avvitare una barra filettata su un estrattore e rimuovere il perno snodo (19).

D Auf dem Abzieher die Gewindstange festschrauben und den Gelenkstift (19) abnehmen.

E Atornillar una barra roscada en un extractor y remover la rótula (19).

F Sur l'extracteur visser une barre filetée et enlever la boîtier d'articulation (19).

d

I Allentare ed asportare le viti di ritegno (21).

D Schrauben (21) lockernund abschrauben.

E Aflojar y sacar los tornillos de retenciòn (21).

F Desserrer et enlever les vis de fixation (21).

e

I Rimuovere il supporto (20).

D Die Lagerung (20) abmontieren.

E Remover el soporte (20).

F Enlever le support (20).

ASSEMBLY - ASSEMBLAGGIO - MONTIEREN - ENSAMBLAR - ASSEMBLER

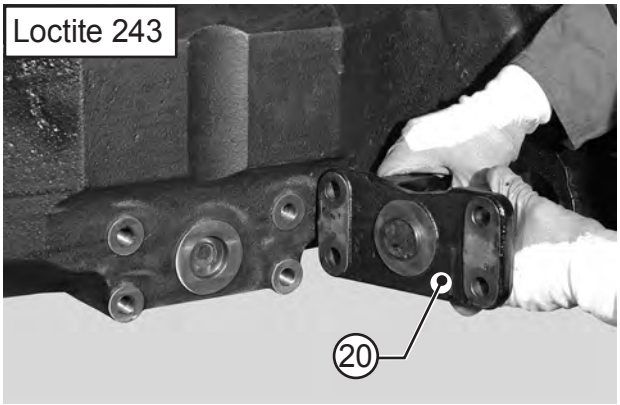

GB a

Position the support (20) and lock it with the screws (21) previously coated with Loctite 243.

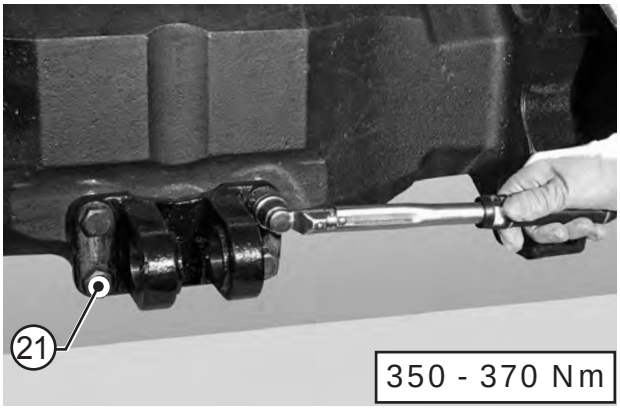

GB b

Tight the screws to 350 - 370 Nm.

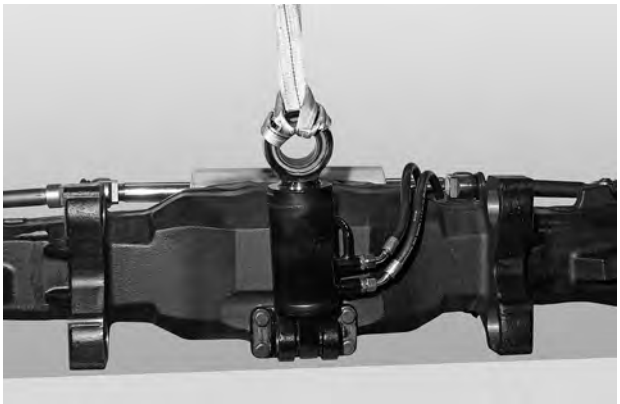

GB c

Install the piston (11) in the support (20).

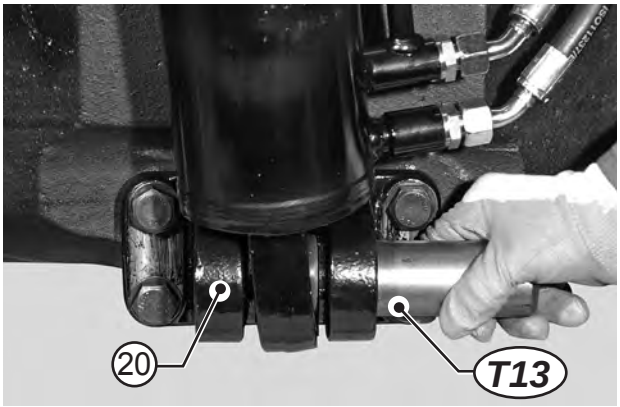

GB d

Inserting the special tools T13 align the ball bushing with the piston support (20).

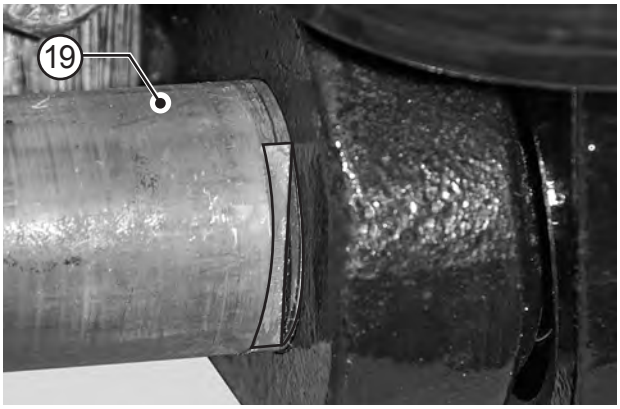

GB e

Before inserting the cylindrical pin (19),
position the seat of the safety stop in the correct position.

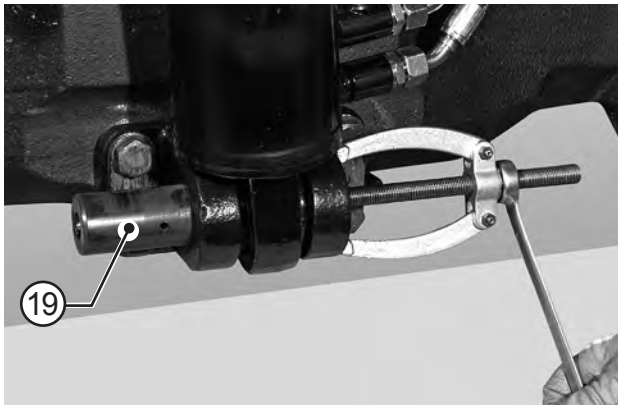

GB f

Install the cylindrical pin (19) from the case by means of a puller.
Carefully check that pin (19) is completely inserted.

a

I Posizionare il supporto (20) e bloccarlo con le viti (21) spalmate con Loctite 243.

D Die Lagerung (20) und mit den Schrauben (21), die zuvor mit Loctite 243 geschmiert wurden, blockieren.

E Colocar el soporte (20) y bloquearla con los tornillos (21).

F Placer le support (20) et bloquer celle-ci avec les vis (21) enduites de Loctite 243.

b

I Serrare le viti alla coppia di 350 - 370 Nm e avvitare.

D Anzugsmomente der Schrauben 350 - 370 Nm und zuschrauben.

E Die Schrauben mit einem Anzugsmoment von 350 - 370 Nm festziehen.

F Serrer la vis au couple de 350 - 370 Nm.

c

I Inserire il pistone (11) nel supporto (20).

D Sie den Kolben (11) in den Support (20) installieren.

E Montar el pistón (11) en el soporte (20).

F Monter le piston (11) dans le support (20).

d

I Inserire l'attrezzo speciale T13 per allineare la bussola sferica con il supporto piston (20).

D Die Spezialvorrichtung T13 einführen, um die Kugelbuchse mit den Support (20) auszurichten.

E Insertar la herramienta especial T13 para alinear el casquillo esférico con el soporte (20).

F Placer l'outil spécial T13 pour aligner la douille sphérique avec le support (20).

e

I Prima dell'inserimento del perno cilindrico (19), posizionare la sede del fermo di sicurezza nella giusta posizione.

D Positionieren Sie vor dem Einführen des Zylinderstifts (19) den Sitz der Sicherungsmarke an der richtigen Stelle

E Antes de meter el pivote cilíndrico (19), poner el alojamiento del retén de seguridad en la posición correcta.

F Avant de procéder à l'introduction de l'axe cylindrique (19), positionner parfaitement le siège de l'élément d'arrêt de sécurité.

f

I Utilizzando un estrattore, inserire il perno cilindrico (19).
Verificare il completo inserimento del perno (19).

D Mit einem Abzieher, die Kegelstifte zylinderförmig (19) montieren.
Überprüfen daß der Bolzen (19) vollkommen.

E Utilizando un extractor, insertar el perno cilindrico (19).Verifi ca que el perno (19) es completamente insertado.

F A l'aide d'un extracteur, remover le cylindrique pivot (19).
Avec soin vérifique l'axe (19) est complètement insérée.

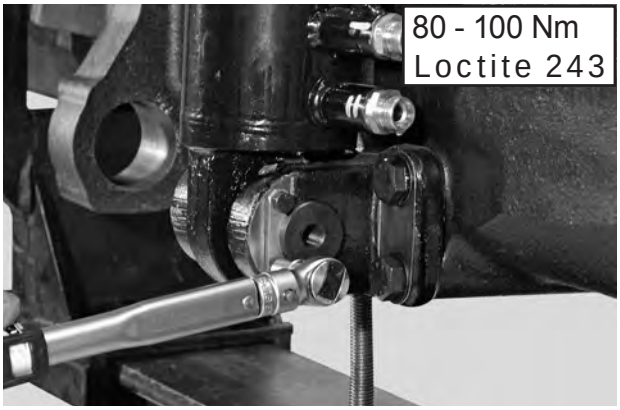

GB a

Fit the catch and lock with screw coated with Loctite 243.
Tighten screw to a torque of 80 - 100 Nm.

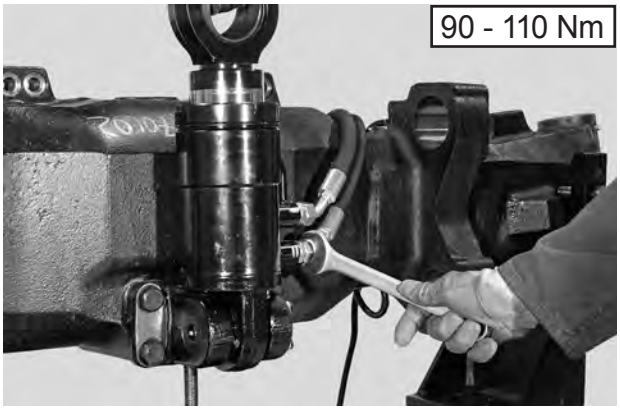

GB b

Secure hydraulic connectors correctly.
Torque wrench setting: 90 - 110 Nm
NOTE. Fit as originally mounted, using the markings made previously as reference, do not swap.

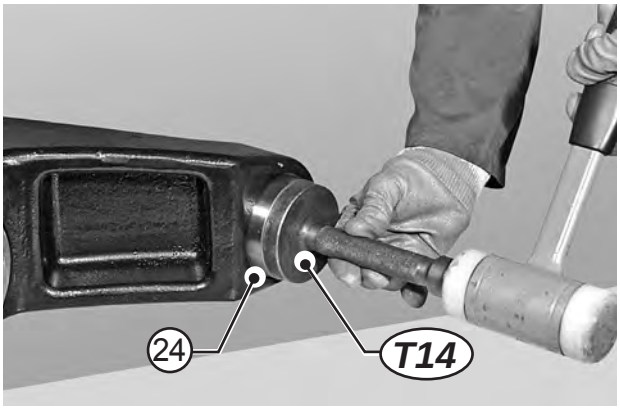

GB c

Use special tool T14 Install the thrust block (24) into the fulcrum holes of the lower lever (6).

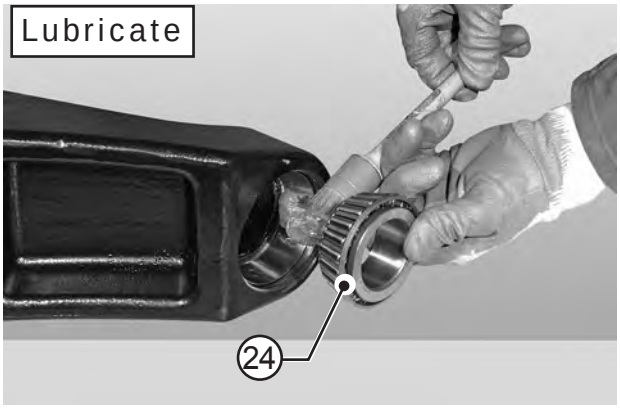

GB d

Lubricate and install the bearing (24).

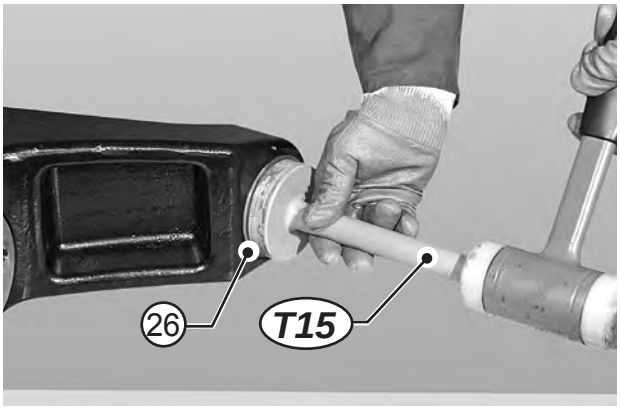

GB e

Install the frictional resistance ring (26) using the special tool T15.
NOTE. Make sure that the ring is properly set in its seat.

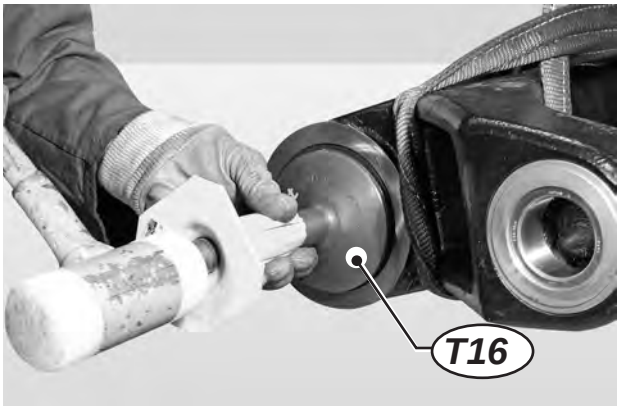

GB f

Use special tool T16 Install the thrust block (37) into the fulcrum holes of the lower lever (6).

a

I Montare l'arresto e bloccare con la vite spalmata con Loctite 243.
Serrare la vite ad una coppia di 80 - 100 Nm.

D Den Sperrstift montieren und die Schraube, die mit Loctite 243 geschmiert worden ist, blockieren. Die Schrauben mit einem Anzugsmoment von 80 - 100 Nm festziehen.

E Montar el paro y bloquear con el tornillo pasada con Loctite 243.
Apretar el tornillo a un par de 80 - 100 Nm.

F Monter la bague de retenue et bloquer avec la vis enduite de Loctite 243.
Serrer la vis au couple de 80 - 100 Nm.

b

I Fissare adeguatamente i raccordi idraulici.
Coppia di serraggio: 90 - 110 Nm
NOTA. Rispettare la posizione segnata in precedenza

D Fixieren Sie die Wasseranschlussstücke auf angemessene Weise.
Anzugsmoment: 90 - 110 Nm
HINWEIS: Die zuvor markierte Einbaulage einhalten

E Fijar adecuadamente los racores hidráulicos.
Par de torsiòn: 90 - 110 Nm
NOTA. Respetar la posición indicada antes

F Fixer les raccords hydrauliques de façon appropriée.
Couple de serrage: 90 - 110 Nm
REMARQUE: Respecter la position précédemment repérée

c

I Utilizzando l'attrezzo speciale T14, installare le ralle (24) del fulcro della leva inferiore (6).

D Mit dem Spezialwerkzeug T14 die obere Buchse (24) in den untere Hebel (6).

E Con la ayuda de la herramienta especial T14 instalar la rangua exterior (24) en los orificios de centro de la palanca inferior (6).

F À l'aide de l'outil spécial T14 mettre en place la rondelle de butée extérieure cellesci dans les trous du point d'appui de levier inférieur (6).

d

I Lubrificare e montare il cuscinetto (24).

D Schmieren und Montieren den Lager (24).

E Lubricar y montar el cojinetes (24).

F Lubrifier et monter le palier (24).

e

I Utilizzando l'attrezzo speciale T15, installare l'anello antiusura (26).
NOTA. Assicurarsi che l'anello sia perfettamente in sede.

D Mit dem Spezialwerkzeug T15, Verschleissfestigkeit Ring montieren (26).
BEMERKUNG. Sicherstellen, der Ringe richtig sitzt.

E Con la ayuda de la herramienta especial T15, instalar l'anillo antiusure (26).
NOTA. Asegurarse de que l'anillo se encuentra perfectamente en sede.

F À l'aide de l'outil spécial T15, installar la anneau résitant à l'usure (26).
NOTE. S'assurer que le anneau soit parfaitement dansson logement.

f

I Utilizzando l'attrezzo speciale T16, installare le ralle (37) del fulcro della leva inferiore (6).

D Mit dem Spezialwerkzeug T16 die obere Buchse (37) in den untere Hebel (6).

E Con la ayuda de la herramienta especial T16 instalar la rangua e6terior (37) en los orificios de centro de la palanca inferior (6).

F À l'aide de l'outil spécial T16 mettre en place la rondelle de butée e6térieure (37) cellesci dans les trous du point d'appui de levier inférieur (6).

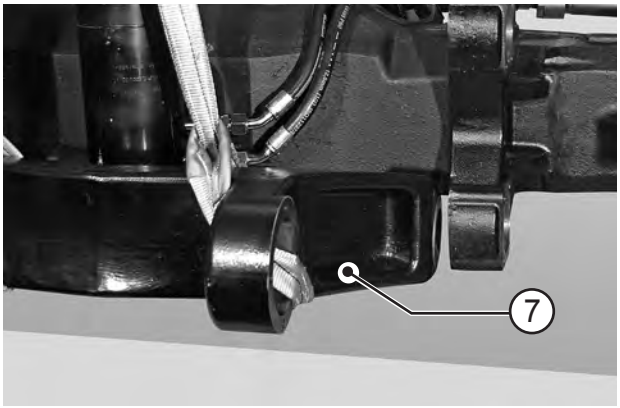

GB a

Sling the entire unit (7) and connect it to the hoist.
Place the lower lever (7) on the axle.

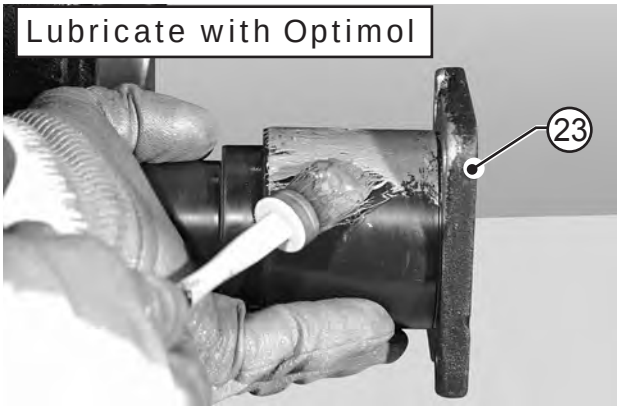

GB b

Lubricate the articulation pin (23).

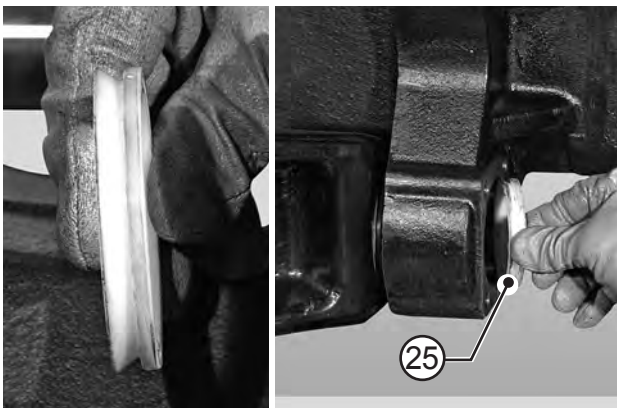

GB c

Lubricate the articulation pin seat.
Fit the front sealing ring (25) into the case.

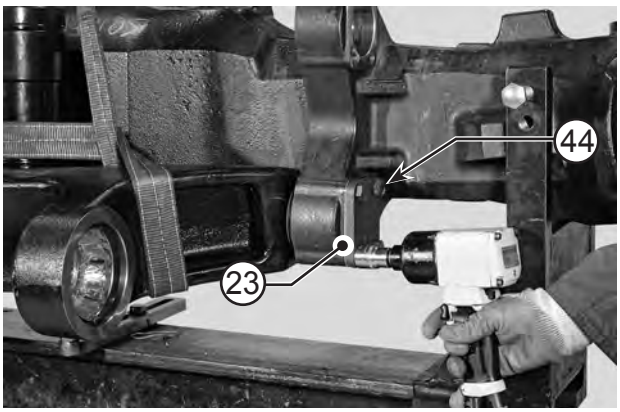

GB d

Install the articulation pin (23). Coat the nuts with Loctite 242.

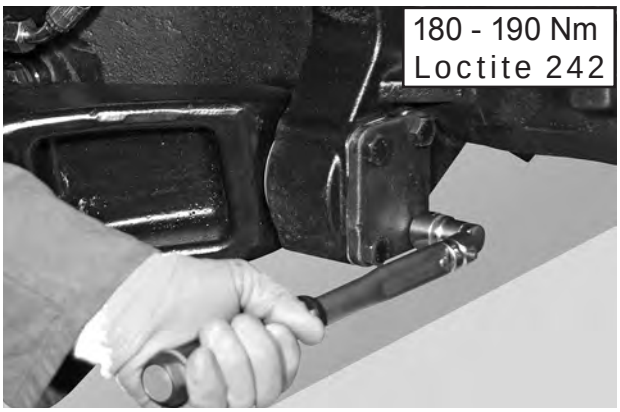

GB e

Tighten the new fittin screws (44) of articulation pins in sequence using the cross tightening method.
Torque wrench setting: 180 - 190 Nm.

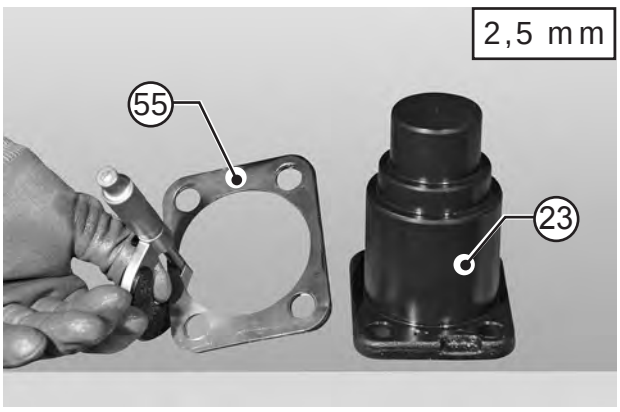

GB f

Prepare a series of shims (55) of 2,5 mm. to be assembled under the pin (23).

a

I Imbragare il gruppo completo (7) e collegarlo al mezzo di sollevamento. Posizionare la leva inferiore (7) sull'assale

D Komplettes Aggregat (7) anschlagen und an das Hebemittel hängen. Hebel senker (7) auf legen.

E Eslingar el grupo completo (7) y conectarlo al medio de elevación. Posicionar la palanca (7).

F Elinguer le groupe complet (7) puis le hisser au moyen de relevage. Placer le levier (7).

b

I Lubrificare il perno snodo (23).

D Schmieren das Bolzen (23).

E Lubricar el perno de fulcro (23).

F Lubrifier le boîtier articulation (23).

c

I Lubrificare la sede del perno snodo.
Montare in sede l'anello di tenuta frontale (25).

D Schmieren das Bolzensitz.
In den Häuse die frontalen Dichtringe (25) montieren.

E Lubricar el fulcro del perno.
Montar en las ròtula el segmento de compresiòn frontal (25).

F Lubrifier le siège de boîtier articulation.
Monter les boîtier les bagues d'ètanchéité frontal (25).

d

I Montare il perno snodo (23). Spalmare le viti con Loctite 242.

D Das Bolzen (23) montieren. Die Schrauben mit Loctite 242 einschmieren.

E Montar el perno de fulcro (23). Untar los tornillos con Loctite 242.

F Monter le boîtierde articulation (23). Enduire les écrous avec Loctite 242.

e

I nuove viti (44) di ritegno del perno snodo .
Coppia di serraggio: 180 - 190 Nm

D Entgegengesetzt und abwechselnd die Schrauben (44) der Gelenkstiften festschrauben.
Anzugsmoment: 180 - 190 Nm

E Apretar en secuencia con el método cruzado, los tornillos (44) de retenciòn de las ròtulas .
Par de torsiòn: 180 - 190 Nm

F Serrer dans l'ordre, par le biais du mode croisè , les vis (44) de fi xation des tourillons d'articulation.
Couple de serrage: 180 - 190 Nm

f

I Preparare una serie di spessori da 2,5 mm (55) da montare sotto il perno (23).

D Eine Reihe von Unterlegscheiben von 2,5 mm (23) zur Montage unter den Bolzen (55) vorbereiten.

E Preparar una serie de espesores (23) de 2,5 mm para poner debajo del perno (55).

F Preparer un jeu de cales (23) 2,5 mm puor les monter sous le tourillon (55).

GB a

Install the articulation pin (23) complete with shims (55).
.

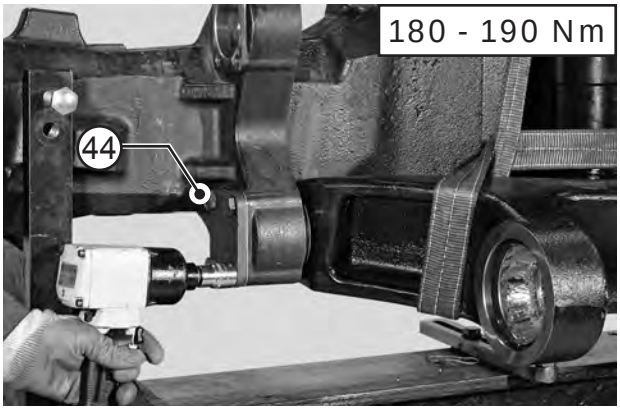

GB b

Tighten the new fittin screws (44) of articulation pins in sequence using the cross tightening method.
Torque wrench setting: 180 - 190 Nm.

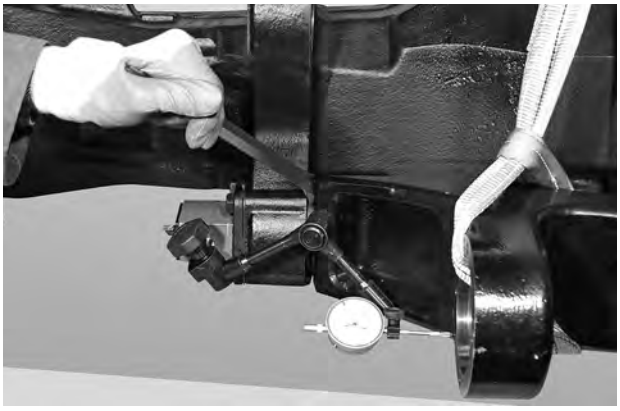

GB c

Position comparator as shown in the figure and preset it to 1 mm and reset it to zero.

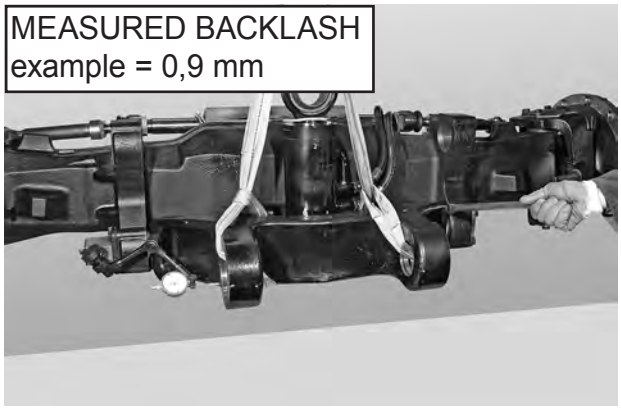

GB d

Check by means of a lever the gap.

Bearing Preload Drw = 0,5 mm
EXAMPLE
First step Shim = 2,5 mm
Measured Backlash = 0,9 mm
S = (First step shim - Backlash) - Preload Drw =
S = (2,5 mm - 0,9 mm) - 0,5 mm = 1,1 mm
S = 1,1 mm

GB e

Calculate the difference between sizes **"First step shim", "Measured Backlash"** and **"Preload Drw"** so as to obtain the size **"S"** of the shim (55) that will go under the pin.

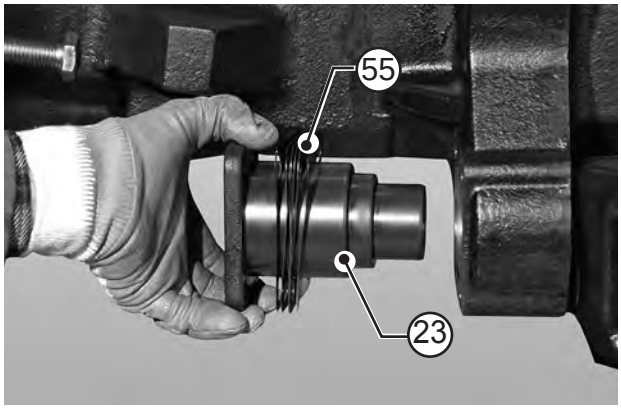

GB f

Using two levers, remove the articulation pin (23).
Pay attention not to damage the surfaces.

a

I Montare il perno snodo (23) completo di spessori (55).

D Das Bolzen (23) samt der Distanzstücke (55) montieren.

E Montar el perno de fulcro (23) completa de los espesores (55).

F Monter le boîtierde articulation (23) équipé les cales (55).

b

I Serrare in sequenza con il metodo incrociato, le nuove viti (44) di ritegno del perno snodo .
Coppia di serraggio: 180 - 190 Nm

D Entgegengesetzt und abwechselnd die Schrauben (44) der Gelenkstiften festschrauben.
Anzugsmoment: 180 - 190 Nm

E Apretar en secuencia con el método cruzado, los tornillos (44) de retenciòn de las ròtulas .
Par de torsiòn: 180 - 190 Nm

F Serrer dans l'ordre, par le biais du mode croisè , les vis (44) de fi xation des tourillons d'articulation.
Couple de serrage: 180 - 190 Nm

c

I Posizionare come mostrato in fi gura un comparatore a tasto orientabile, precaricarlo di circa 1 mm ed azzerarlo.

D Taste einsetzen und um 1mm vorbelasten (siehe Zeichnung) und danach zurückstellen.

E Colocar comparador a tecla orientable como se muestra en la figura, precargarlo de 1 mm aprox y azerarlo.

F Placer un comparateur à touche orientable comme montré sur la fi gure, précharger celui-ci d'environ 1 mm et mettre à zéro.

d

I Con l'aiuto di una leva verificare il gioco.

D Mit Hilfe eines Hebels auf Spielfreiheit überprüfen.

E Haciendo palanca, verificar el juego.

F l'aide d'un levier verifier le jeu.

e

I Eseguire la differenza tra le misure **"First step shim", "Measured Backlash"** e **Preload Drw** per stabilire la misura **"S"** dello spessore (55) da inserire.

D Den Unterschied zwischen Maß **"First step shim", "Measured Backlash"** und **"Preload Drw"** ausrechnen, um das Distanzstück **"S"** (55) auszurechnen, das unter die Scheibe eingesetzt werden soll.

E Sacar la diferencia entre las medidas **"First step shim", "Measured Backlash"** y **"Preload Drw"** para establecer la medida **"S"** del espesor (55) a insertar.

F Effectuer la différence entre les mesures **"First step shim", "Measured Backlash"** et **"Preload Drw"** pour établir la mesure **"S"** de la cale (155) à introduire.

f

I Utilizzando due leve, rimuovere il perno snodo (23).
Prestare attenzione per non rovinare i piani.

D Mit Hilfe von zwei Hebeln, Gelenkstift (23) abnehmen.
Achtung, die Flächen nicht verkratzen.

E Utilizando dos palancas, remover la ròtula (23).
Tener cuidado a fin de no estropear las superficies.

F A l'aide de deux leviers, enlever le tourillon d'articulation (23).
Faire trés attention de ne pas abîmer les plateaux.

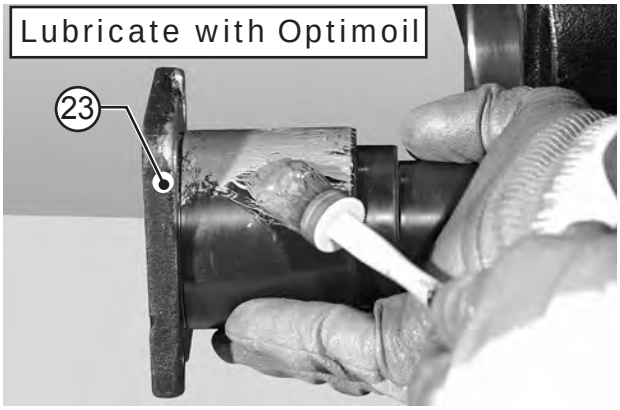

GB a

Lubricate the articulation pin (23) and shims (55).

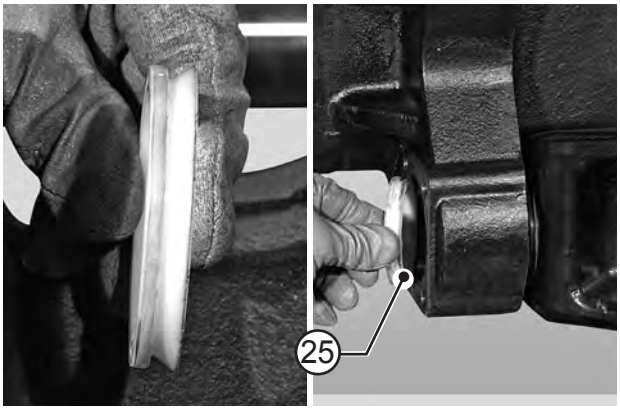

GB b

Lubricate the articulation pin seat.
Fit the front sealing ring (25) into the case.

GB c

Install the articulation pin (23) complete with shims (55).

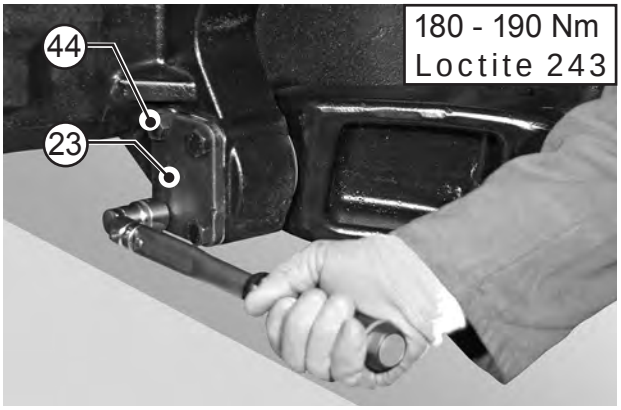

GB d

Coat the nuts with Loctite 243.
Tighten the new fittin screws (44) of articulation pins in sequence using the cross tightening method.
Torque wrench setting: 180 - 190 Nm.

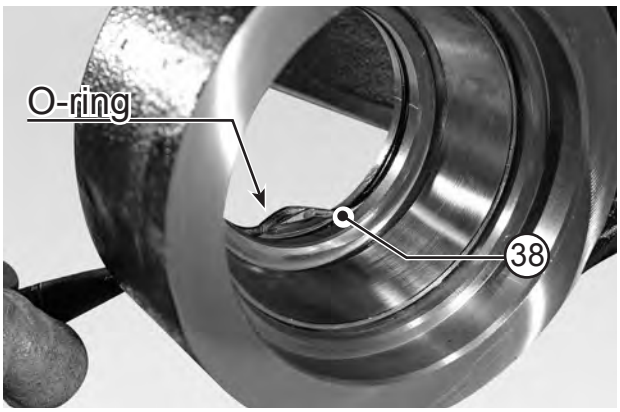

GB e

Fit the sealing rings (38).

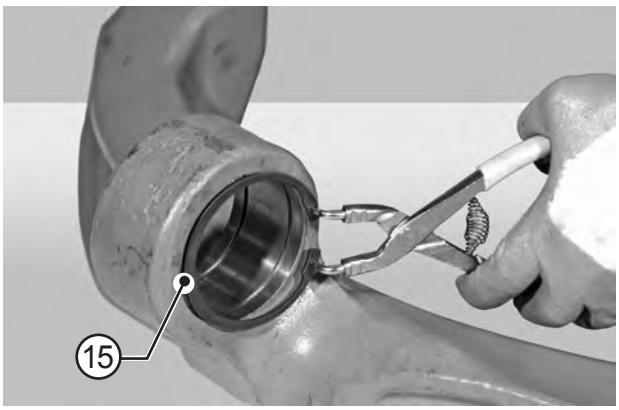

GB f

Fit a snap ring (15).
The snap ring acts as an end stop to correctly locate the ball bushing.

a

I Lubrificare il perno snodo (39) e spessori (55).

D Schmieren das Bolzen (39) und der Distanzstücke (55).

E Lubricar el perno de fulcro (39) y los espesores (55).

F Lubrifier le boîtier articulation (39) et les cales (55).

b

I Lubrificare la sede del perno snodo.
Montare in sede l'anello di tenuta frontale (25).

D Schmieren das Bolzensitz.
In den Häuse die frontalen Dichtringe (25) montieren.

E Lubricar el fulcro del perno.
Montar en las ròtula el segmento de compresiòn frontal (25).

F Lubrifier le siège de boîtier articulation.
Monter les boîtier les bagues d'ètanchéité frontal (25).

c

I Montare il perno snodo (23) completo di spessori (55).

D Das Bolzen (23) samt der Distanzstücke (55) montieren.

E Montar el perno de fulcro (23) completa de los espesores (55).

F Monter le boîtier de articulation (23) équipé les cales (55).

d

I Spalmare le viti con Loctite 243.
Serrare in sequenza con il metodo incrociato, le nuove viti (44) di ritegno del perno snodo.
Coppia di serraggio: 180 - 190 Nm.

D Die Schrauben mit Loctite 243 einschmieren.
Entgegengesetzt und abwechselnd die Schrauben (44) der Gelenkstiften festschrauben.
Anzugsmoment: 180 - 190 Nm.

E Untar los tornillos con Loctite 243.
Apretar en secuencia con el método cruzado, los tornillos (44) de retenciòn de las ròtulas .
Par de torsiòn: 180 - 190 Nm.

F Enduire les écrous avec Loctite 243.
Serrer dans l'ordre, par le biais du mode croisè , les vis (44) de fixation des tourillons d'articulation.
Couple de serrage: 180 - 190 Nm.

e

I inserire gli anelli O-ring (38).

D Die Dichtringe (38) montieren.

E Montar los segmentos de compresion (38).

F Monter les bagues d'étanchéité (38).

f

I Installare un anello elastico (15).
L'anello elastico funge da fine corsa per il corretto posizionamento della bussola sferica.

D Bringen Sie den Springring (15) an.
Der Springring dient als Anschlag bei der richtigen Positionierung des Kugelkompasses.

E Instalar un anillo elástico (15).
El anillo elástico actúa de tope para la correcta colocación del casquillo esférico.

F Installer un anneau élastique (15).
L'anneau élastique sert de fin de course pour le positionnement correct de la douille à sphère.

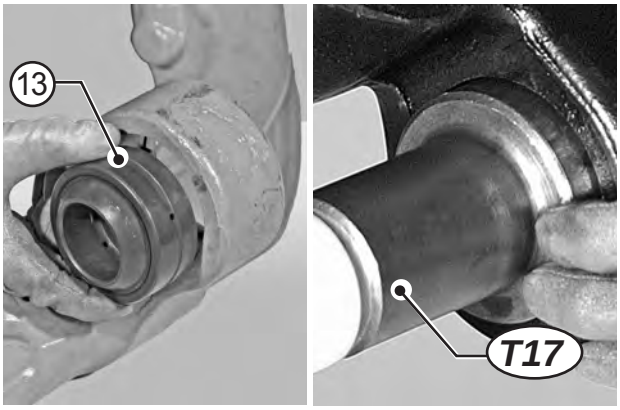

GB a

Lubricate and fit the ball bushing (13).
Use special tool T17 to fit the ball bushing (13) for the joint pin (12).
NOTE. The snap ring (15) acts as an end stop to correctly locate the ball bushing.

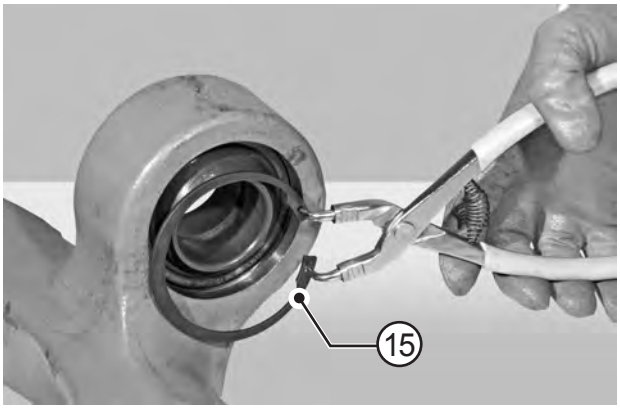

GB b

Install the second snap ring (15).

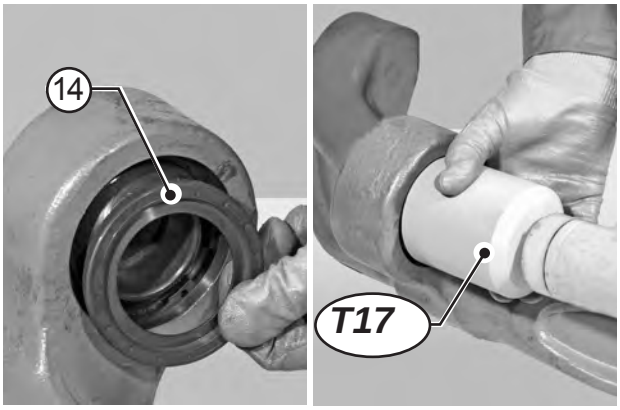

GB c

Fit the seal ring (14). Use special tool T17 to fit the ball bushing (13) for the joint pin (12). **NOTE**. The snap ring (15) acts as an end stop to correctly locate the ball bushing.

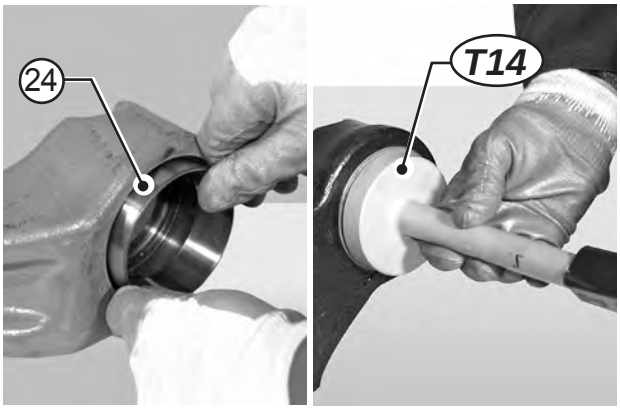

GB d

Use special tool T14 Install the thrust block (24) into the fulcrum holes of the intermediate lever.

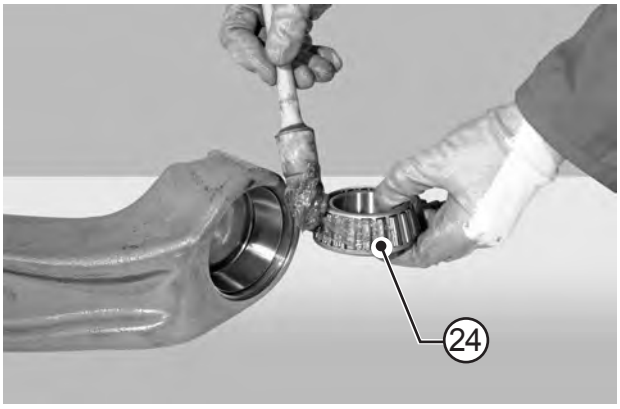

GB e

Lubricate and install the bearing (24).

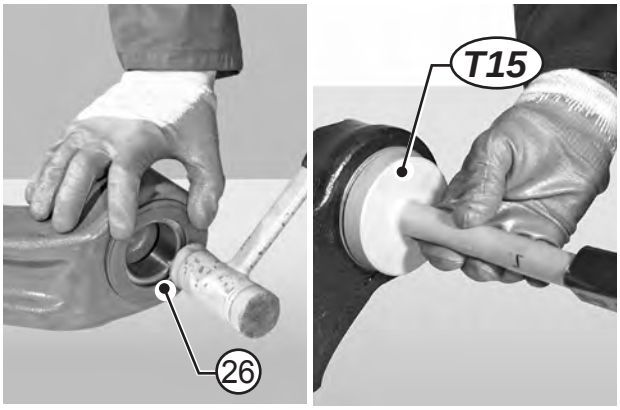

GB f

Install the frictional resistance ring (26) using the special tool T15.
NOTE. Make sure that the ring is properly set in its seat.

a

I Lubrificare e posizionare la bussola sferica (13).
Utilizzando l'attrezzo speciale T17 montare in sede la boccola sferica (13) del perno snodo (12).

NOTA. L'anello elastico funge da fine corsa per il corretto posizionamento della bussola sferica.

D Schmieren Sie der Kugelbuchse (13) und bringen Sie ihn in die richtige Position. Die Kugelbuchse (13) des Gelenkzapfens (12) mit dem Spezialwerkzeug T17 montieren.

HINWEIS: Der Springring dient als Anschlag bei der richtigen Positionierung des Kugelkompasses

E Lubricar y poner en posición el manguito esférico (13). Con la ayuda de la herramienta especial T17, montar en su lugar el manguito esférico (13) del perno articulado (12).

NOTA. El anillo elástico actúa de tope para la correcta colocación del casquillo esférico.

F Lubrifier et positionner la douille à sphère (13).
À l'aide de l'outil spécial T17 monter dans son logement la douille sphérique (13) de l'axe articulation (12).

REMARQUE: L'anneau élastique sert de fin de course pour le positionnement correct de la douille à sphère.

b

I Installare il secondo anello elastico (15).

D Setzen Sie den zweiten Springring (15) ein.

E Instalar el segundo anillo elástico (15).

F Installer le deuxième anneau élastique (15).

c

I Posizionare l'anello di tenuta (14). Utilizzando l'attrezzo speciale T17 montare in sede la boccola sferica (13) del perno snodo (12).

NOTA. L'anello elastico funge da fine corsa per il corretto posizionamento della bussola sferica.

D Positionieren Sie den Dichtungsring (14). Die Kugelbuchse (13) des Gelenkzapfens (12) mit dem Spezialwerkzeug T17 montieren.

HINWEIS: Der Springring dient als Anschlag bei der richtigen Positionierung des Kugelkompasses

E Colocar el anillo de retención (14). Con la ayuda de la herramienta especial T17, montar en su lugar el manguito esférico (13) del perno articulado (12).

NOTA. El anillo elástico actúa de tope para la correcta colocación del casquillo esférico.

F Positionner l'anneau d'étanchéité (14). À l'aide de l'outil spécial T17 monter dans son logement la douille sphérique (13) de l'axe articulation (12).

REMARQUE: L'anneau élastique sert de fin de course pour le positionnement correct de la douille à sphère.

d

I Utilizzando l'attrezzo speciale T14, installare le ralle (24) del fulcro della leva intermedia.

D Mit dem Spezialwerkzeug T14 die obere Buchse (24) in der Zwischenhebel.

E Con la ayuda de la herramienta especial T14 instalar la rangua exterior (24) en los orificios de centro de la palanca intermedia.

F À l'aide de l'outil spécial T14 mettre en place la rondelle de butée (24) extérieure cellesci dans les trous du point d'appui de levier intermédiaire.

e

I Lubrificare e montare il cuscinetto (24).

D Schmieren und Montieren den Lager (24).

E Lubricar y montar el cojinetes (24).

F Lubrifier et monter le palier (24).

f

I Utilizzando l'attrezzo speciale T15, installare l'anello antiusura (26).
NOTA. Assicurarsi che l'anello sia perfettamente in sede.

D Mit dem Spezialwerkzeug T15, Verschleissfestigkeit Ring montieren (26).
BEMERKUNG. Sicherstellen, der Ringe richtig sitzt.

E Con la ayuda de la herramienta especial T15, instalar l'anillo antiusure (26).
NOTA. Asegurarse de que l'anillo se encuentra perfectamente en sede.

F À l'aide de l'outil spécial T15, installar la anneau résitant à l'usure (26).
NOTE. S'assurer que le anneau soit parfaitement dansson logement.

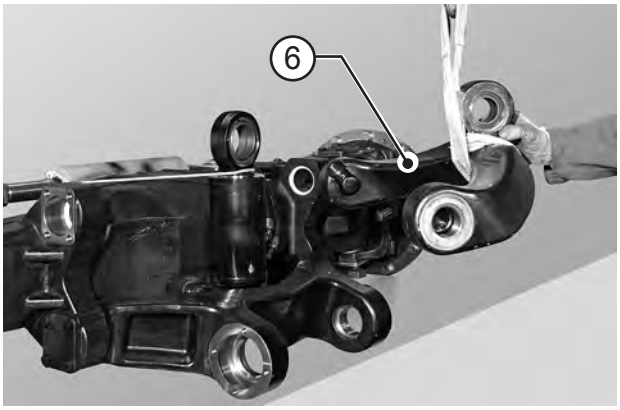

GB a

Place the lever (6) on the axle.

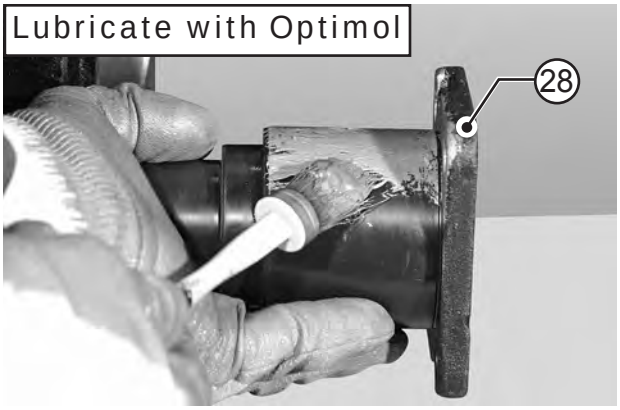

GB b

Lubricate the articulation pin (28).

GB c

Lubricate the articulation pin seat.
Fit the front sealing ring (25) into the case.

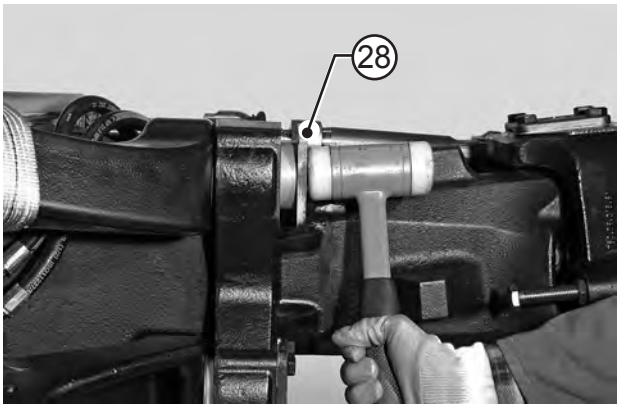

GB d

Install the articulation pin (28).

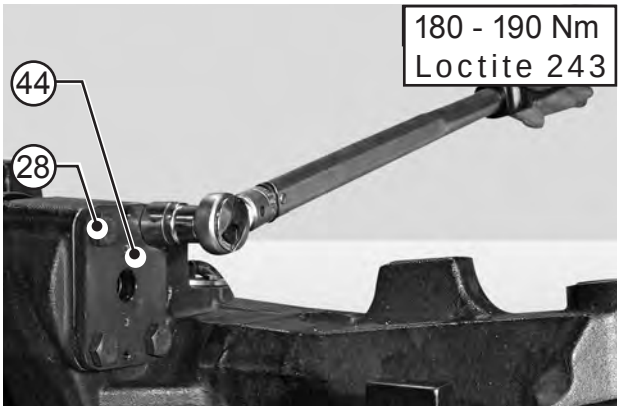

GB e

Coat the nuts with Loctite 243.
Tighten the new fittin screws (44) of articulation pins (28) in sequence using the cross tightening method.
Torque wrench setting: 180 - 190 Nm.

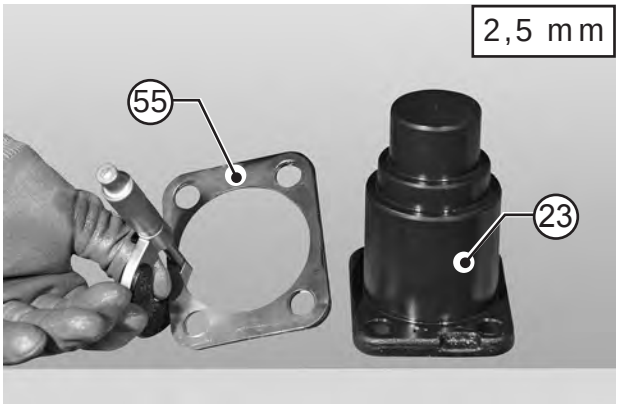

GB f

Prepare a series of shims (55) of 2,5 mm. to be assembled under the pin (23).

a

I Posizionare la leva (6) sull'assale

D Hebel (6) auf legen.

E Posicionar la palanca (6).

F Placer le levier (6).

b

I Lubrificare il perno snodo (28).

D Schmieren das Bolzen (28).

E Lubricar el perno de fulcro (28).

F Lubrifier le boîtier articulation (28).

c

I Lubrificare la sede del perno snodo.
Montare in sede l'anello di tenuta frontale (25).

D Schmieren das Bolzensitz.
In den Häuse die frontalen Dichtringe (25) montieren.

E Lubricar el fulcro del perno.
Montar en las ròtula el segmento de compresiòn frontal (25).

F Lubrifier le siège de boîtier articulation.
Monter les boîtier les bagues d'ètanchéité frontal (25).

d

I Montare il perno snodo (28).

D Das Bolzen (28) montieren.

E Montar el perno de fulcro (28).

F Monter le boîtier de articulation (28).

e

I Spalmare le viti con Loctite 243.
Serrare in sequenza con il metodo incrociato, le nuove viti (44) di ritegno del perno snodo (28).
Coppia di serraggio: 180 - 190 Nm.

D Die Schrauben mit Loctite 243 einschmieren.
Entgegengesetzt und abwechselnd die Schrauben (44) der Gelenkstiften (28) festschrauben.
Anzugsmoment: 180 - 190 Nm.

E Untar los tornillos con Loctite 243.
Apretar en secuencia con el método cruzado, los tornillos (44) de retenciòn de las ròtulas (28).
Par de torsiòn: 180 - 190 Nm.

F Enduire les écrous avec Loctite 243.
Serrer dans l'ordre, par le biais du mode croisè , les vis (44) de fixation des tourillons d'articulation (28).
Couple de serrage: 180 - 190 Nm.

f

I Preparare una serie di spessori da 2,5 mm (55) da montare sotto il perno (23).

D Eine Reihe von Unterlegscheiben von 2,5 mm (23) zur Montage unter den Bolzen (55) vorbereiten.

E Preparar una serie de espesores (23) de 2,5 mm para poner debajo del perno (55).

F Preparer un jeu de cales (23) 2,5 mm puor les monter sous le tourillon (55).

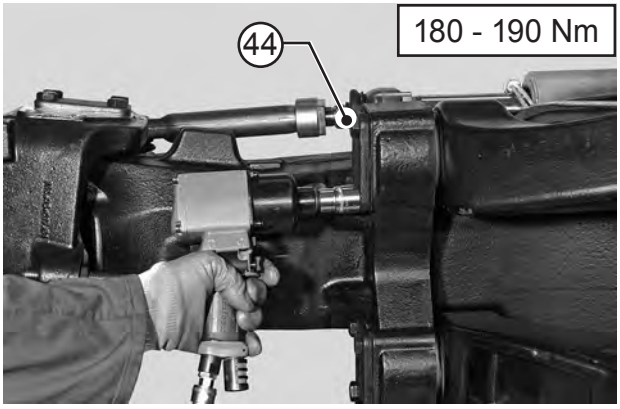

GB a

Tighten the new fittin screws (44) of articulation pins in sequence using the cross tightening method.
Torque wrench setting: 180 - 190 Nm.

Bearing Preload Drw = 0,5 mm
EXAMPLE
First step Shim = 2,5 mm
Measured Backlash = 0,9 mm
S = (First step shim - Backlash) - Preload Drw =
S = (2,5 mm - 0,9 mm) - 0,5 mm = 1,1 mm
S = 1,1 mm

GB b

Position comparator, preset it to 1 mm and reset it to zero.
Check by means of a lever the gap.
Calculate the difference between sizes **"First step shim", "Measured Backlash"** and **"Preload Drw"** so as to obtain the size **"S"** of the shim (4) that will go under the pin.

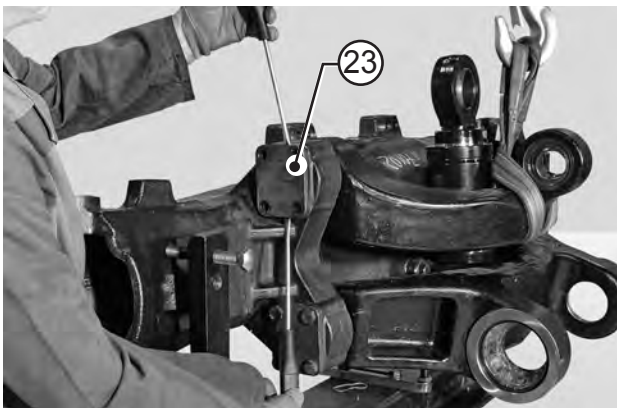

GB c

Using two levers, remove the articulation pin (23).
Pay attention not to damage the surfaces.

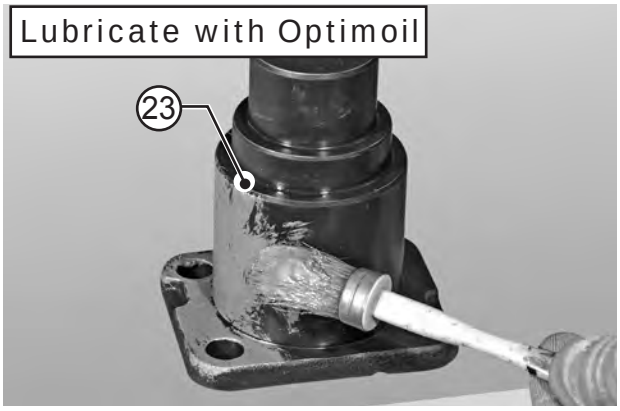

GB d

Lubricate the articulation pin (23) and shims (55).

GB e

Fit the front sealing ring (25) into the case.

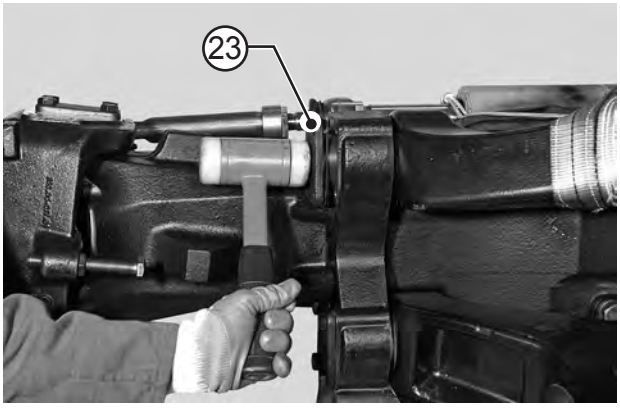

GB f

Install the articulation pin (23) complete with shims (55).

a

I Serrare in sequenza con il metodo incrociato, le nuove viti (44) di ritegno del perno snodo .
Coppia di serraggio: 180 - 190 Nm

D Entgegengesetzt und abwechselnd die Schrauben (44) der Gelenkstiften festschrauben.
Anzugsmoment: 180 - 190 Nm

E Apretar en secuencia con el método cruzado, los tornillos (44) de retenciòn de las ròtulas .
Par de torsiòn: 180 - 190 Nm

F Serrer dans l'ordre, par le biais du mode croisè, les vis (44) de fixation des tourillons d'articulation.
Couple de serrage: 180 - 190 Nm

b

I Posizionare un comparatore a tasto orientabile. precaricarlo di circa 1 mm ed azzerarlo.
Con l'aiuto di una leva verificare il gioco. Eseguire la differenza tra le misure **"First step shim", "Measured Backlash"** e **Preload Drw** per stabilire la misura **"S"** dello spessore (4) da inserire.

D Taste einsetzen und um 1mm vorbelasten; danach zurückstellen.Mit Hilfe eines Hebels auf Spielfreiheit überprüfen. Den Unterschied zwischen Maß **"First step shim", "Measured Backlash"** und **"Preload Drw"** ausrechnen, um das Distanzstück **"S"** (4) auszurechnen, das unter die Scheibe eingesetzt werden soll.

E Colocar comparador a tecla orientable, precargarlo de 1 mm aprox y azerarlo.
Haciendo palanca, verificar el juego.
Sacar la diferencia entre las medidas **"First step shim", "Measured Backlash"** y **"Preload Drw"** para establecer la medida **"S"** del espesor (4) a insertar.

F Placer un comparateur à touche orientable, précharger celui-ci d'environ 1 mm et mettre à zéro.
l'aide d'un levier verifier le jeu.
Effectuer la différence entre les mesures **"First step shim", "Measured Backlash"** et **"Preload Drw"** pour établir la mesure **"S"** de la cale (14) à introduire.

c

I Utilizzando due leve, rimuovere il perno snodo (23).
Prestare attenzione per non rovinare i piani.

D Mit Hilfe von zwei Hebeln, Gelenkstift (23) abnehmen.
Achtung, die Fla chen nicht verkratzen.

E Utilizando dos palancas, remover la ròtula (23).
Tener cuidado a fin de no estropear las superficies.

F A l'aide de deux leviers, enlever le tourillon d'articulation (23).
Faire trés attention de ne pas abîmer les plateaux.

d

I Lubrificare il perno snodo (39) e spessori (55).

D Schmieren das Bolzen (39) und der Distanzstücke (55).

E Lubricar el perno de fulcro (39) y los espesores (55).

F Lubrifier le boîtier articulation (39) et les cales (55).

e

I Montare nella scatola l' anello di tenuta frontale (25).

D In den Häuse die frontalen Dichtringe (25) montieren.

E Montar en las ròtula el segmento de compresiòn frontal (25).

F Monter les boîtier les bagues d'ètanchéité frontal (25).

f

I Montare il perno snodo (23) completo di spessori (55).

D Das Bolzen (23) samt der Distanzstücke (55) montieren.

E Montar el perno de fulcro (23) completa de los espesores (55).

F Monter le boîtier de articulation (23) équipé les cales (55).

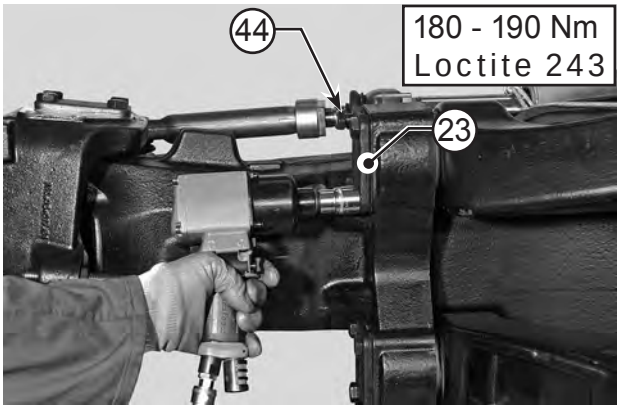

GB a

Coat the nuts with Loctite 243.
Tighten the new fittin screws (44) of articulation pins in sequence using the cross tightening method.
Torque wrench setting: 180 - 190 Nm.

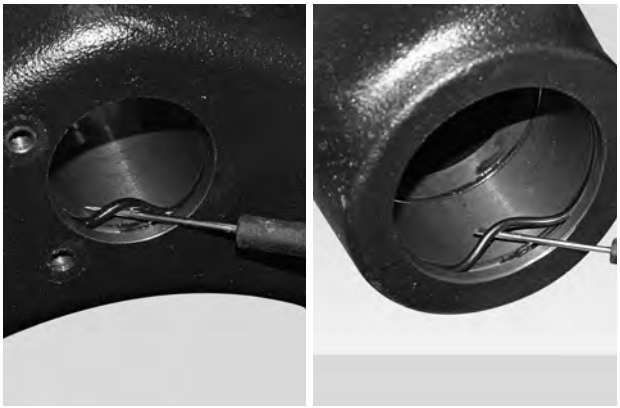

GB b

Fit the upper wishbone sealing rings (18)(38).

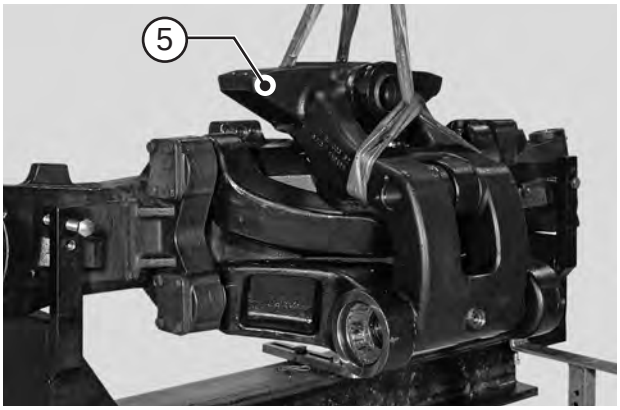

GB c

Harness and balance the upper wishbone (5), and attach to a hoist.
Fit the upper wishbone (5).

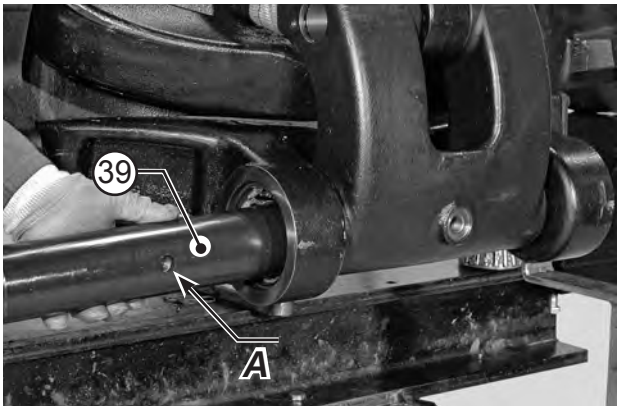

GB d

Inserting the special tools T18 align the upper wishbone with lower wishbone. Mind the position previously marked on the lower pin head of the position pin seat “A”.
Using a plastic hummer, completely insert the lower lever pin (39)

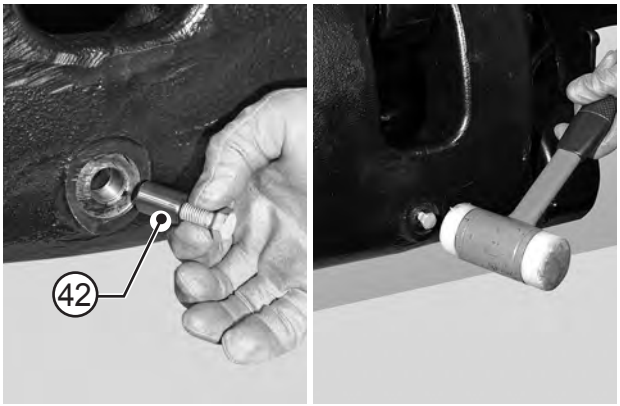

GB e

Centre the pin holes and insert the pin (42).

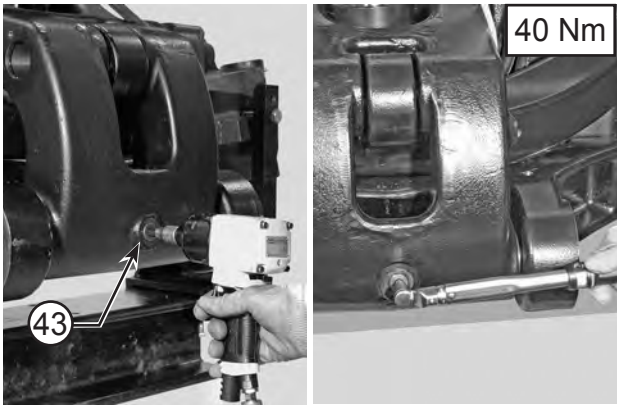

GB f

Install the plug (43).
Torque wrench setting: 40 Nm.

a

I Spalmare le viti con Loctite 243.
Serrare in sequenza con il metodo incrociato, le nuove viti (44) di ritegno del perno snodo.
Coppia di serraggio: 180 - 190 Nm.

D Die Schrauben mit Loctite 243 einschmieren.
Entgegengesetzt und abwechselnd die Schrauben (44) der Gelenkstiften festschrauben.
Anzugsmoment: 180 - 190 Nm.

E Untar los tornillos con Loctite 243.
Apretar en secuencia con el método cruzado, los tornillos (44) de retenciòn de las ròtulas .
Par de torsiòn: 180 - 190 Nm.

F Enduire les écrous avec Loctite 243.
Serrer dans l'ordre, par le biais du mode croisè , les vis (44) de fi xation des tourillons d'articulation.
Couple de serrage: 180 - 190 Nm.

b

I inserire gli anelli O-ring (18)(38) della leva superiore.

D Die Dichtringe (18)(38) montieren.

E Montar los segmentos de compresion (18)(38) de la palanca superior.

F Monter les bagues d'étanchéité (18)(38) de le levier supérieur.

c

I Imbragare e bilanciare la leva superiore (5) e collegarlo ad un mezzo di sollevamento.
Assemblare la leva superiore (5).

D Den obere Hebel (5) einschlingen, ausgleichen und mit einer Hubvorrichtung anschlagen.
Sie den oberen Hebel (5).

E Embragar y equilibrar la palanca superior (5) y conectarlo a un medio elevador.
Montar la palanca superior (5).

F Élinguer et équilibrer le levier supérieur (5) puis le relier à un moyen de levage.
Monter le levier supérieur (5).

d

I Inserire l'attrezzo speciale T18 per allineare la leva superiore (5) con la leva inferiore. Montare il perno inferiore rispettando la posizione della sede della spina "A" segnata precedentemente sulla testa del perno.Utilizzando un mazzuolo in plastica, inserire completamente il perno inferiore (39).

D Die Spezialvorrichtung T18 einführen, um den obere Hebel (5) mit dem unteren Hebel auszurichten.
Den Unter Verwendung unter Einhaltung der Position der Aufnahme des Stiftes "A" montieren, die zuvor auf dem Bolzenkopf markiert wurde.Unter Verwendung eines Gummihammers den unteren Bolzen komplett einschlagen (39).

E Insertar la herramienta especial T18 para alinear la palanca superior (5) con la palanca inferior.
Montar el perno inferior respetando la posición del alojamiento de la clavija "A" que había sido marcada anteriormente en la cabeza del perno. Usando un mazo de plástico, insertar completamente el perno inferior (39).

F Placer l'outil spécial T18 pour aligner le levier supérieur (5) avec le levier inférieur.
Monter le pivot inférieur en respectant la position du logement de la goupille "A" reportée auparavant sur la tête du pivot. Introduire complètement le pivot inférieur (39) en utilisant un maillet en plastique.

e

I Centrare i fori spina e inserire la spina (42).

D Die Stiftlöcher zentrieren und die Stifte (42) einsetzen.

E Centrar los agujeros (42) para los pernos elasticos y ponerlo.

F Centrer les trous de cheville et insérer le broche (42).

f

I Avvitare il tappo (43).
Coppia di serraggio: 40 Nm

D Entluefter (43) montieren.
Anzugsmoment: 40 Nm

E Montar (43) el tapon.
Par de torsiòn: 40 Nm

F Monter le reniflard (43).
Couple de serrage: 40 Nm

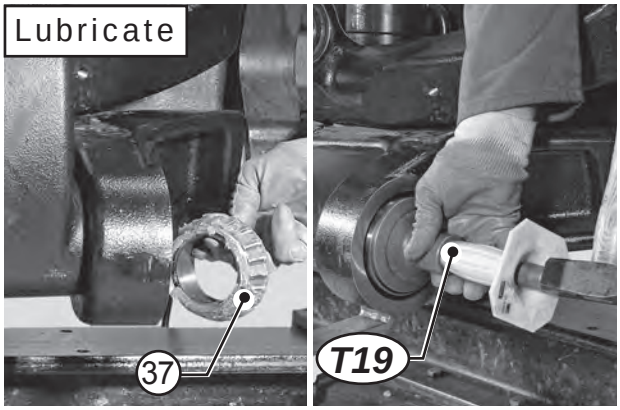

GB a

Fill the central bearing housing with grease.
Use special tool T19, install the bearing (37) onto the lower pin (39).

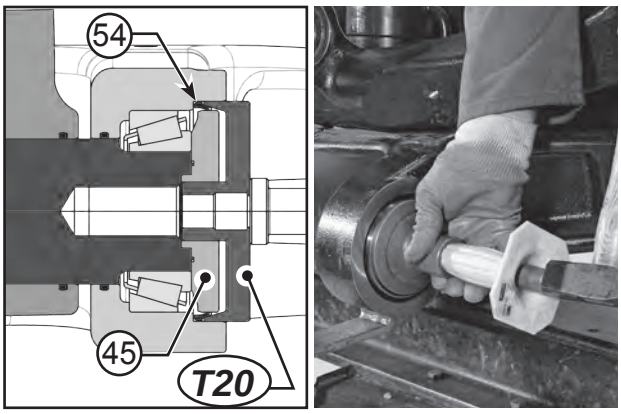

GB b

Assembly the distance piece (45) complete with O-ring (62).
After applying grease, use special tool T20 to install the sealing ring (54) of the spacer (45) inside the lower lever (7).
CAUTION! Thoroughly check that positioning of the seal ring (54) is correct.

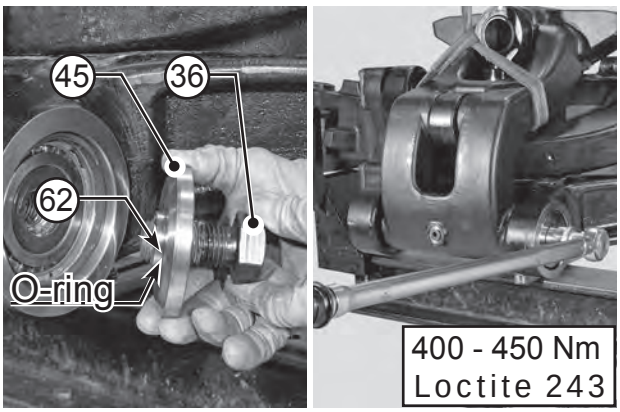

GB c

Apply LOCTITE 243 to the fastener screw (61) and fix.
Torque wrench setting: 400 - 500 Nm.
Check that the O-ring (62) is intact.

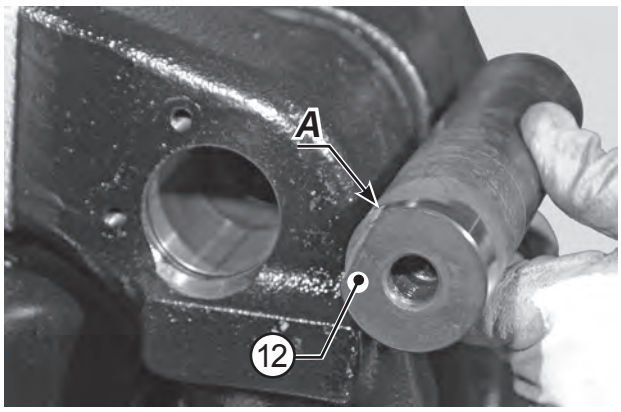

GB d

Before inserting the cylindrical pin (12),
position the seat of the safety stop ***"A"*** in the correct position.

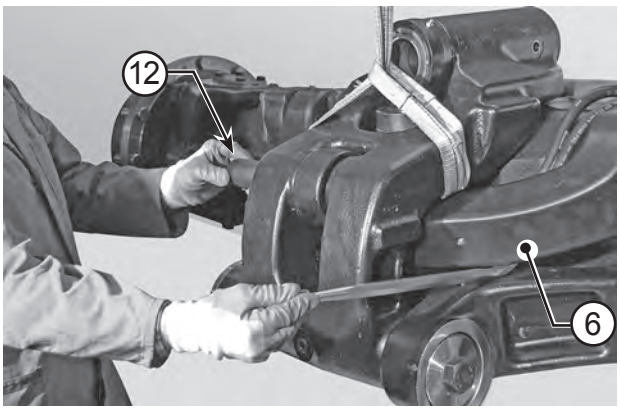

GB e

With a lever, raise the upper lever (6) to facilitate insertion of the pin (12).

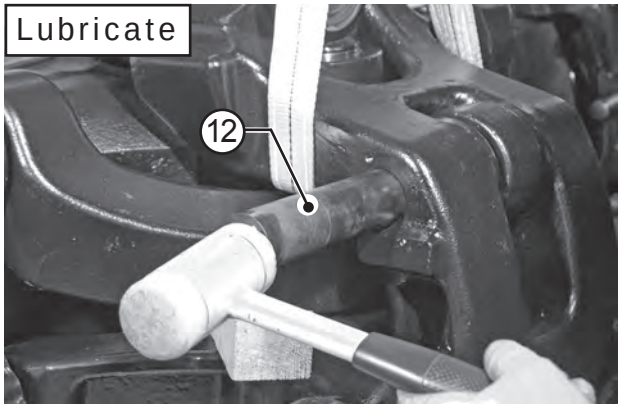

GB f

Using a plastic hummer completely fit the intermediate pin (12) in its seat.

a

I Riempire di grasso la tasca centrale dei cuscinetti. Utilizzando l'attrezzo speciale T19, montare il cuscinetto (24)

D Mit Fett den zentralen Lagersitz füllen. Mit dem Spezialwerkzeug T19 montieren den Lager (37) in den Unter Verwendung (39).

E Engrasar bien la cavidad paralos rodamientos. Con la ayuda de la herramienta especial T19 instalar el cojinetes (37) del perno inferior (39).

F Remplir avec du gras le logement central des paliers. À l'aide de l'outil spécial T19 mettre en place le palier (37) sur le pivot inférieur (39).

b

I Installare il distanziale (45). Lubrificare con grasso ed installare nella leva inferiore (7) l'anello di tenuta (54) del distanziale (45) utilizzando l'attrezzo speciale T20.
ATTENZIONE! Controllare attentamente il posizionamento dell'anello di tenuta (54).

D Distanzstück (45) und O-RInge (62) einsetzen. Mit Fett die Dichtung (54) des Distanzring schmieren und mit dem Spezialwerkzeug T20 in das Hebemittel (3) montieren.
ACHTUNG! Sorgfältig die Position die Dichtung (7) kontrollieren.

E Insertar el distancial (45) completo con la junta OR (62). Lubricar con grasa el segmento de compresión (54). Con la ayuda de la herramienta especial T20 instalar en la palanca inferior (7) el segmento de compresión (54) del distancial (45).

F Monter la bague d'espacement (45) avec le garniture OR (62). Placer Lubrifier avec du gras et installer dans le levier (7) la bague d'étanchéité (54) de entretoise (45) et à l'aide de l'outil spécial T20 mettre en place.
ATTENTION! Contróler attentivement le positionnement de la bague d'étanchéité (54).

c

I Applicare LOCTITE 243 alla vite di fissaggio ed avvitare. Coppia di serraggio: 400 - 500 Nm
Controllare l'integrità della guarnizione OR (62).

D Anzugsmoment: 400 - 500 Nm
LOCTITE 243 auf die Befestigungsschraube geben und festziehen.
Zustand des O-Rings (62) kontrollieren.

E Par de torsiòn: 400 - 500 Nm
Aplicar LOCTITE 243 en el tornillo de fijación enroscar.
Controlar la integridad de la junta OR (62).

F Appliquer de la LOCTITE 243 à la vis de fixation et visset. Couple de serrage: 400 - 500 Nm
Contrôler le bon état de la garniture OR (62).

d

I Prima dell'inserimento del perno cilindrico (12), posizionare la sede ***"A"*** del fermo di sicurezza nella giusta posizione.

D Positionieren Sie vor dem Einführen des Zylinderstifts (12) den Sitz ***"A"*** der Sicherungsmarke an der richtigen Stelle.

E Antes de meter el pivote cilíndrico (12), poner el alojamiento ***"A"*** del retén de seguridad en la posición correcta.

F Avant de procéder à l'introduction de l'axe cylindrique (12), positionner parfaitement le siège ***"A"*** de l'élément d'arrêt de sécurité.

e

I Con una leva. sollevare la leva (6) per aiutare l'inserimento del perno (12).

D Heben Sie den oberen Hebel (6) zum einfacheren Einfügen des Stifts (12) an.

E Con una palanca levantar la palanca superior(6)para facilitar que entre el pivote (12).

F Avec un levier, soulever le levier supérieur (6) pour faciliter l'introduction de l'axe (12).

f

I Utilizzando un mazzuoo in plastica inserire completamente il perno intermedio (12).

D Mit einem Gummihammer den Zwischenbolzen (12) komplett einschlagen.

E Usando un mazo de plástico, insertar completamente el perno intermedio (12).

F Mettre complètement le pivot intermédiaire (12) en place en utilisant un maillet en plastique.

GB a

Fit the safety plate (61) and lock with screw (60) coated with Loctite 243.
Tighten screw to a torque of 20 - 25 Nm.

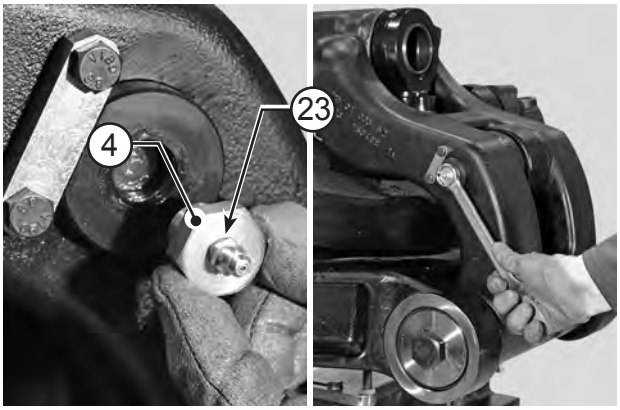

GB b

Install the plug (4) complete with grease pin (10).

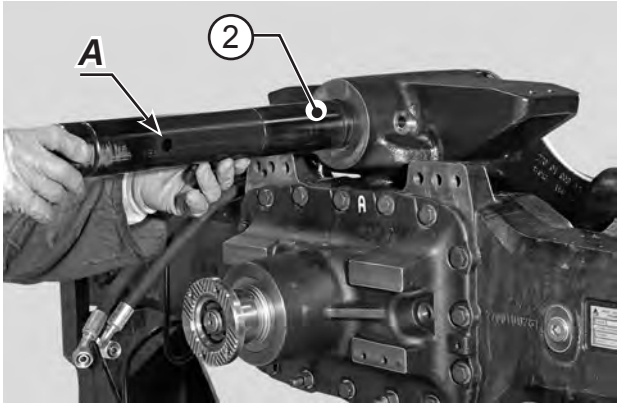

GB c

Mind the position previously marked on the upper pin head (2).

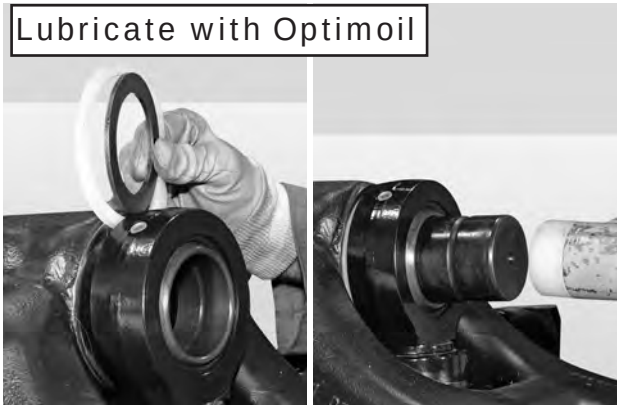

GB d

Assembly the upper pin (2) complete the inner frontal seal ring (9) and centre ring (58)

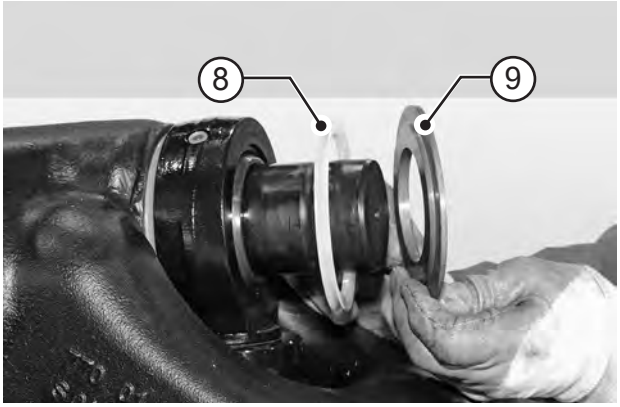

GB e

Completely insert the upper pin (2) and assembly the outer frontal seal ring (8) and centre ring (9)

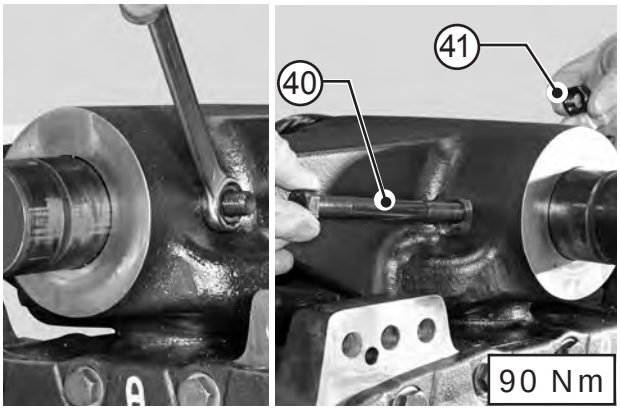

GB f

Engage the stop rod (40) and tighten the nut (41).
Torque wrench setting: 90 Nm

a

I Montare la piastrina di sicurezza (60) e bloccare con le viti (60) spalmata con Loctite 243.
Serrare la vite ad una coppia di 20 - 25 Nm.

D Sicherheit (60) montieren und die Schrauben (60), die mit Loctite 243 geschmiert worden ist, blockieren.
Die Schrauben mit einem Anzugsmoment von 20 - 25 Nm festziehen.

E Montar seguridad (61) y bloquear con los tornillos (60) pasada con Loctite 243.
Apretar el tornillo a un par de 20 - 25 Nm.

F Monter arrét de sùréte (61) et bloquer avec les vis (60) enduite de Loctite 243.
Serrer la vis au couple de 20 - 25 Nm.

b

I Avvitare il tappo (4) completo dell'ingrassatore (10).

D Entluefter (4) und die Schmierbüchse (10) montieren.

E Montar el tapon (4) y engrasador (10).

F Monter le reniflard (4) et legraisseur (10).

c

I Assemblare il perno superiore (2) rispettando la posizione segnata precedentemente.

D Den oberen Bolzen (2) unter Einhaltung der zuvor markierten Position zusammenbauen.

E Ensamblar el perno superior (2) respetando la posición marcada anteriormente.

F Assembler le pivot supérieur (2) en respectant la position reportée auparavant.

d

I Inserire il perno superiore (2) e anello di tenuta frontale (9) interno completo di anello centratore (58).

D Den oberen Bolzen (2) und den vorderen inneren Dichtring (9) komplett mit Zentrierring (58) einsetzen.

E Insertar el perno superior (2) y el anillo de sujeción frontal (9) interno, completo con anillo de centraje (58).

F Placer le pivot supérieur (2) et la bague d'étanchéité intérieure à l'avant (9) avec la bague de centrage (58).

e

I Inserire completamente il perno superiore (2) e montare l'anello di tenuta (8) frontale esterno completo di anello centratore (8).

D Den oberen Bolzen (2) komplett einsetzen und den externen vorderen Dichtring (8) komplett mit Zentrierring (8) montieren.

E Insertar completamente el perno superior (2) y montar el anillo de sujeción (8) frontal externo, completo con anillo de centraje (8).

F Introduire complètement le pivot supérieur (2) et monter la bague d'étanchéité extérieure (8) à l'avant, avec la bague de centrage (8).

f

I Impegnare la vite di arresto (40) e serrare il dado (41).
Coppia di serraggio: 90 Nm

D Sperrstab (40) einsetzen und Mutter (41) anziehen.
Anzugsmoment: 90 Nm

E Bloquear la varilla de tope (40) y apretar la tuerca (41).
Par de torsión: 90 Nm.

F Engager la tige de butée (40) et serrer l'écrou (41).
Couple de serrage: 90 Nm.

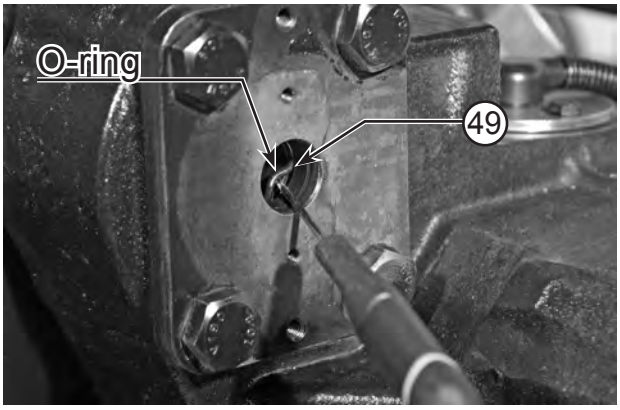

GB a

Fit the sealing ring (49).

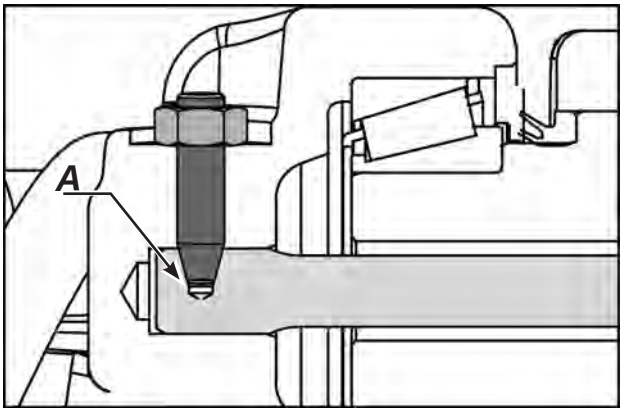

GB b

Position the slot “A” facing upwards.

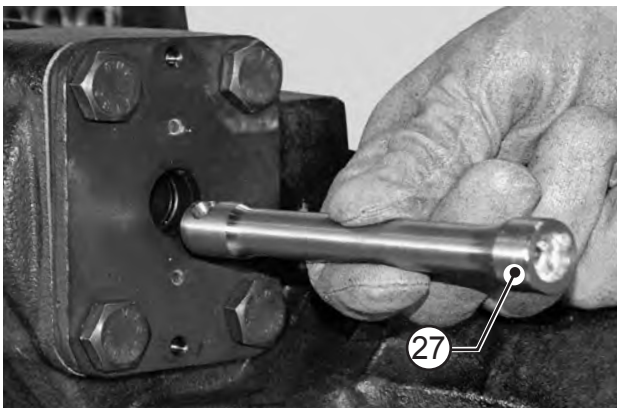

GB c

Lubricate and insert the sensor pin (27).

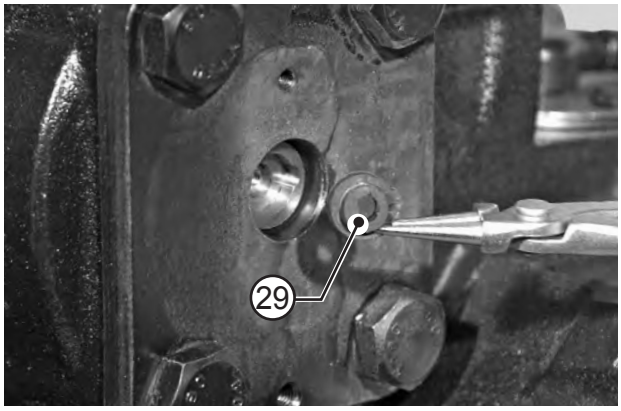

GB d

Insert the rubber joint (29).

GB e

Coat the nut (32) with Loctite 243.
Torque wrench setting: 50 - 60 Nm.
Screw the check nut (33) of the dowel (32) and lock them using a dynamometric wrench.
Torque wrench setting: 80 - 90 Nm

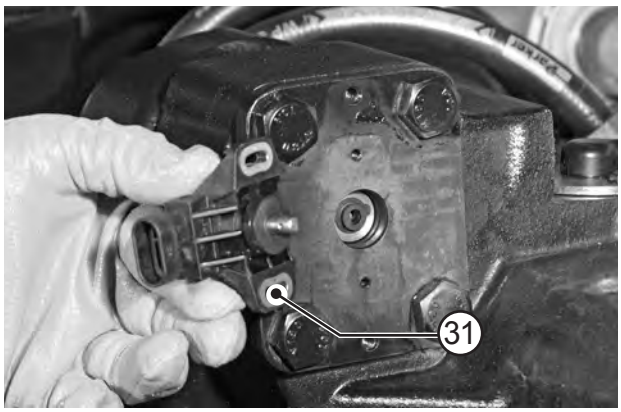

GB f

Install the sensor (31).

a

I inserire gli anelli O-ring (49).

D Die Dichtringe (49) montieren.

E Montar los segmento de compresion (49).

F Monter le bague d'étanchéité (49).

b

I Posizionare la cava "A" verso l'alto.

D Richten Sie die Aushöhlung „A" nach oben.

E Poner la ranura "A" hacia arriba.

F Positionner la gorge "A" vers le haut.

c

I Inserire la barra del sensore (27).

D Sensorstange fetten und einfügen (27).

E Lubricar y poner el eje del sensor (27).

F Lubrifier et insérer le tigé du sensor (27).

d

I Inserire il giunto in gomma (29).

D Gelenk (29) richten.

E Poner la junta (29).

F Positionner le joint (29).

e

I Spalmare il grano (32) con Loctite 243.
Coppia di serraggio: 50 - 60 Nm
Avvitare il dado (33) di bloccaggio del grano (32) e bloccarlo con chiave dinamometrica.
Coppia di serraggio: 80 - 90 Nm

D Der Stifte (32) mit Loctite 243 einschmieren.
Anzugsmoment: 50 - 60 Nm
Muttern (33) zur Befestigung der Stifte (32) zuschrauben und mit einem Momentenschlüssel blockieren.
Anzugsmoment: 80 - 90 Nm

E Untar las espigas (32) con Loctite 243.
Par de torsiòn: 50 - 60 Nm
Atornillar las tuercas (33) de bloqueo de las espigas (32) y bloquearlas con llave dinamométrica.
Par de torsiòn: 80 - 90 Nm

F Enduire le grain (32) avec Loctite 243.
Couple de serrage: 50 - 60 Nm
Visser les écrous (33) de blocage des grains (32), puis bloquer à l'aide d'une clé dynamométrique.
Couple de serrage: 80 - 90 Nm

f

I Installare il sensore (31).

D Der Sensor (31) installieren.

E Instalar el sensor (31).

F Installer le capteur (31).

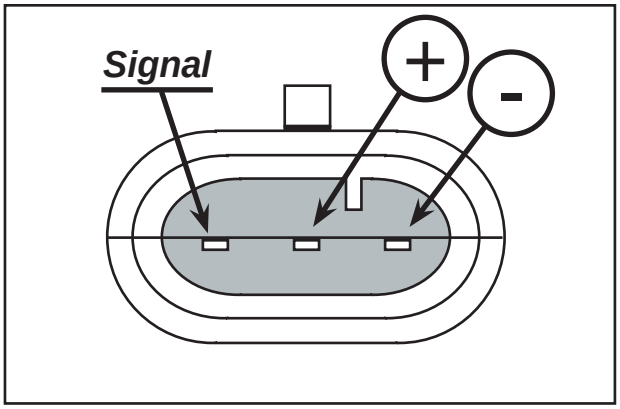

GB a

Connect the sensor (31) to the inspection device according to the diagram.

GB b

Carry out adjustment by turning the sensor and positioning it so that the control device gives a value of ***1 - 1,3 Volt***.

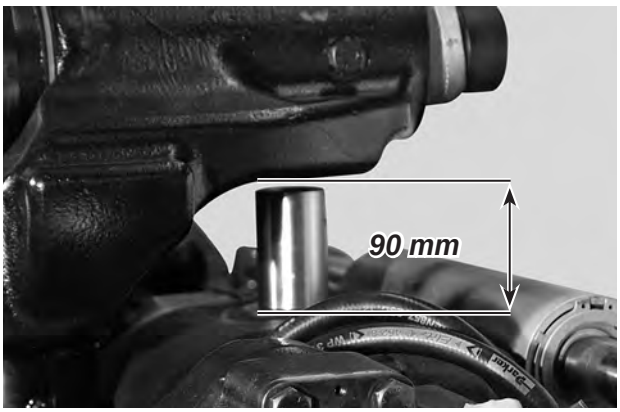

GB c

Raise the shock absorbers and insert a 90 mm shim between the axle and the support.

GB d

Carry out adjustment by turning the sensor and positioning it so that the control device gives a value of ***3,3 - 4,2 Volts***.

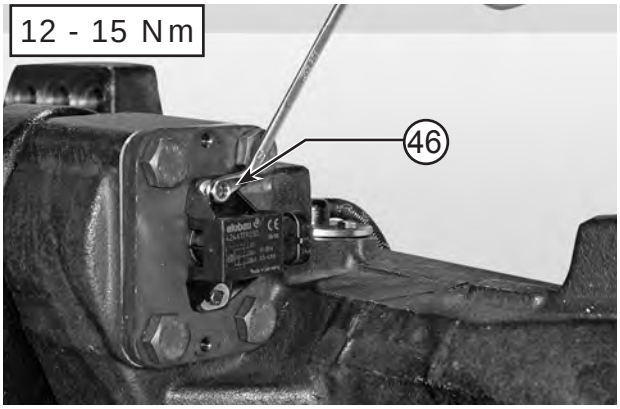

GB e

Install and tight the screws (46).
Torque wrench setting: 12 - 15 Nm

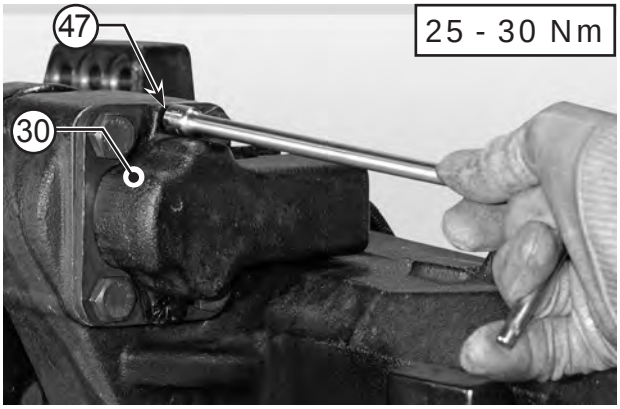

GB f

Install the coverplate (30).
Install and tight the screws (47).
Torque wrench setting: 25 - 30 Nm

a

I Collegare il sensore (31) al dispositivo di controllo secondo lo schema.

D Sensor (31) mit der Kontrollvorrichtung nach der Pläne verbinden.

E Conectar el sensor (31) al dispositivo de control según los esquemas.

F Connecter le capteur (31) au dispositif de contròle à l'aide des schémas.

b

I Eseguire la regolazione ruotando il sensore posizionandolo in modo che il dispositivo di controllo dia un valore di ***1 - 1,3 Volt***.

D Schreiten Sie zur Regulierung fort, indem Sie den Sensor so drehen, dass die Kontrollvorrichtung einen Wert von ***1 - 1,3 Volt*** anzeigt.

E Realizar la regulación girando el sensor poniéndolo de manera que el dispositivo de control dé un valor de ***1 - 1,3 Volt***.

F Effectuer le réglage en faisant pivoter le senseur, en le positionnant de manière à ce que le dispositif de contrôle indique la valeur de ***1 - 1,3 Volt***.

c

I Sollevare la sonspensione e inserire tra assale e supporto uno spessore di 90 mm.

D Heben Sie die Aufhängung an und geben Sie zwischen Achse und Halterung eine 90-mm-Unterlegscheibe.

E Levantar la suspensión y meter entre el eje y el soporte un espesor de 45 mm.

F Soulever la suspension et introduire une épaisseur de 90 mm entre l'essieu et le support.

d

I Eseguire la regolazione ruotando il sensore posizionandolo in modo che il dispositivo di controllo dia un valore di ***3,3 - 4,2 Volts***.

D Schreiten Sie zur Regulierung fort, indem Sie den Sensor so drehen, dass die Kontrollvorrichtung einen Wert von ***3,3 - 4,2 Volts*** anzeigt.

E Realizar la regulación girando el sensor poniéndolo de manera que el dispositivo de control dé un valor de ***3,3 - 4,2 Volts***.

F Effectuer le réglage en faisant pivoter le senseur, en le positionnant de manière à ce que le dispositif de contrôle indique la valeur de ***3,3 - 4,2 Volts***.

e

I Installare le viti di fissaggio (46).
Coppia di serraggio: 12 - 15 Nm

D Schraube (46) blockieren.
Anzugsmoment: 12 - 15 Nm

E Bloquear los tornillos (46).
Par de torsiòn: 12 - 15 Nm

F errer les vis (46).
Couple de serrage: 12 - 15 Nm

f

I Installare la protezione (30).
Installare le viti di fissaggio (47).
Coppia di serraggio: 25 - 30 Nm

D Schutzblech (30) montieren.
Schraube (47) blockieren.
Anzugsmoment: 25 - 30 Nm

E Montar la proteccion (30).
Bloquear los tornillos (47).
Par de torsiòn: 25 - 30 Nm

F Monter les protection en tole (30).
Serrer les vis (47).
Couple de serrage: 25 - 30 Nm

8A18

DANA770 - Service tools

TABLE OF CONTENTS

A. General

The tools described in this section can be ordered from the AGCO spare parts department or by contacting the tooling division of Beauvais by referring to AGCOnet bulletin Trac 60/07.
The prices will then be sent out to you.

B. DANA770 - Service tools

Ref.	3378059M1
Description	Accumulator test kit

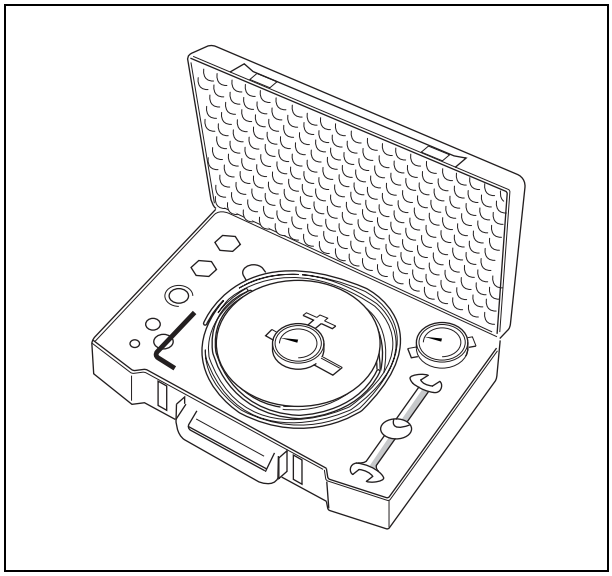

I009140 Fig. 1

Ref.	AG01A
Description	Hydraulic testing and measuring instrument kit

I009102 Fig. 2

8B10

Bearings and transmission shaft - General

TABLE OF CONTENTS

8B11

Section intentionally left blank

TABLE OF CONTENTS

8B12

Bearings and transmission shaft - Diagrams and plans

TABLE OF CONTENTS

8B13

Bearings and transmission shaft - Layout of components

TABLE OF CONTENTS

8B14

Bearings and transmission shaft - Tests and diagnostics

TABLE OF CONTENTS

8B15

Section intentionally left blank

8B16

Bearings and transmission shaft - Adjustments, bleeding and calibrations

TABLE OF CONTENTS

8B17

Bearings and transmission shaft - Disassembly and reassembly

TABLE OF CONTENTS

A. Removing and refitting the front transmission shaft

Preliminary steps

11. Place the tractor on axle stands.

12. Manually release the ParkLock.

Removal

13. Remove the 4 screws from the right and left-hand guards.

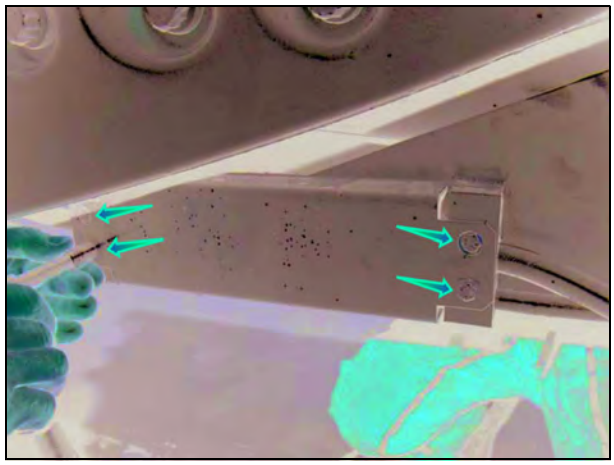

I010280 Fig. 1

14. Using a plastic clip, secure all of the hydraulic hoses.

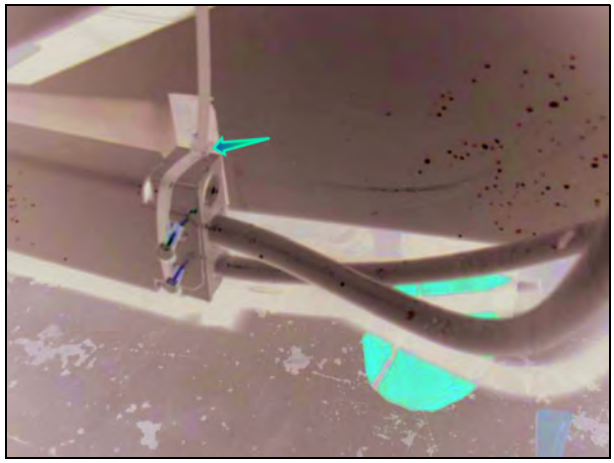

I010281 Fig. 2

15. Remove the screws at the front of the lower guard.

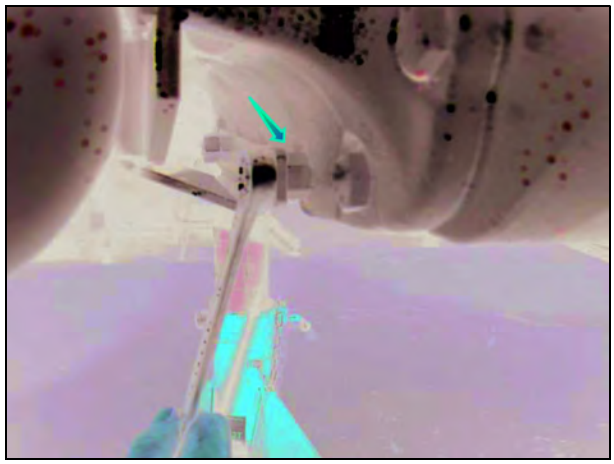

I010282 Fig. 3

16. Remove the screws at the rear of the lower guard.

I010283 Fig. 4

17. Secure the guard by supporting it and then remove the screws located towards the middle of the lower guard.

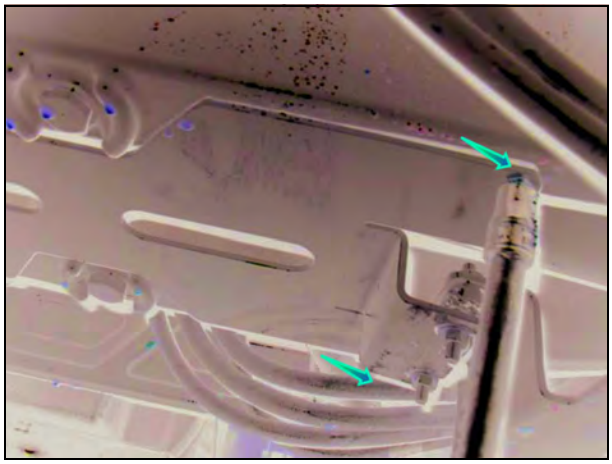

I010284 Fig. 5

18. Remove the guard.

I010285 Fig. 6

19. Using a lever, immobilise the front transmission shaft and then remove the shaft screws.

20. Remove the shaft.

I010287 Fig. 7

Refitting

21. Refit the front transmission shaft.

22. Fit and tighten the nuts to the following torque:

43 Nmto 53 Nm spacer side

43 Nm to 53 Nm front axle side

23. Continue by carrying out the removal steps in reverse order.

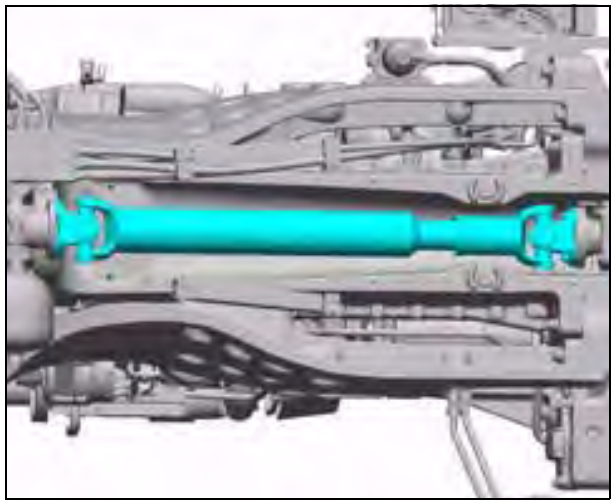

I010288 Fig. 8

B. Removing the 4WD shaft bearing

Preliminary step

24. Remove the transmission shaft.

25. Remove the screw by immobilising the hub using 2 M10x40 screws and a lever.

I011227 Fig. 9

26. Remove the ring.

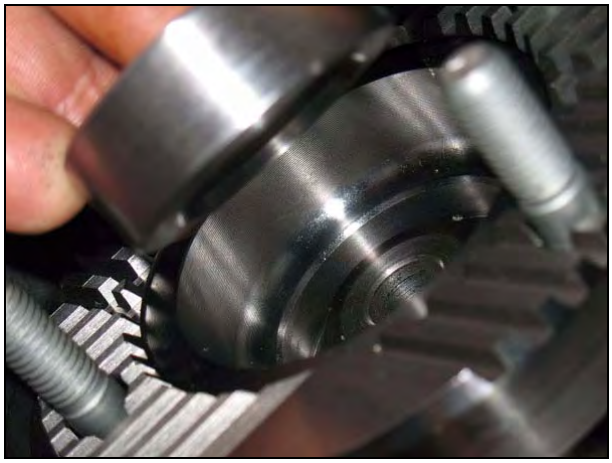

I011236 Fig. 10

27. Remove the 2 retainer plate screws.

I011229 Fig. 11

28. Use a lever to slide the retainer plate downwards.

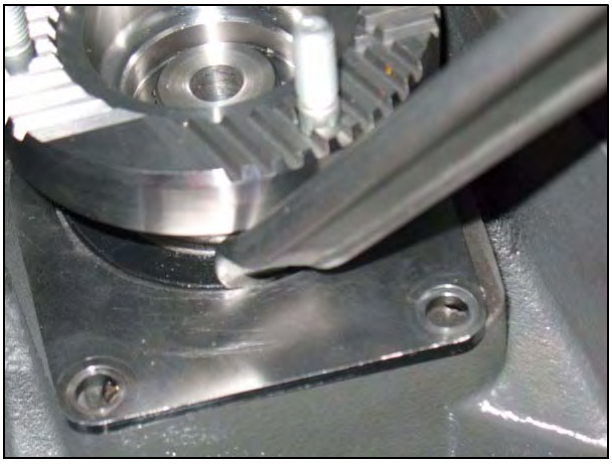

I011237 Fig. 12

29. Use a lever to release the retainer plate towards the rear.

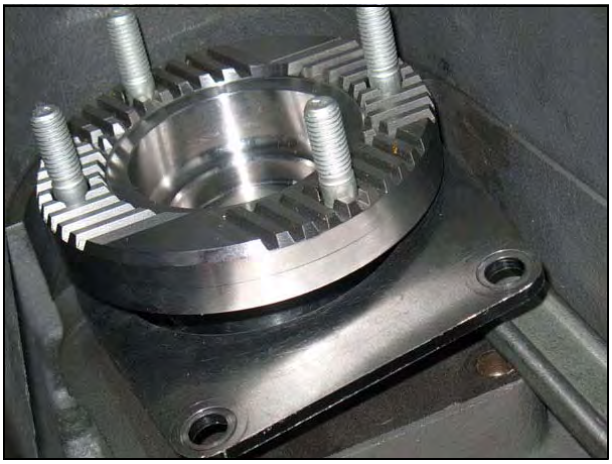

I011238 Fig. 13

30. Extract the hub along with the retainer plate and the bearing.

I011239 Fig. 14

31. Remove the shim.

I011240 Fig. 15

32. Remove the shaft and discard the "O" ring.

I011241 Fig. 16

33. If the bearing is damaged, extract it using a puller.

I011242 Fig. 17

C. Refitting the 4WD shaft bearing

Preliminary step

34. Clean all components.

WARNING: All traces of rust, mud and water must be removed.

If the bearing has been removed

35. Fit a new bearing using a press or a threaded rod (Fig. 18)

I011245 Fig. 18

36. Fit the shaft along with a new "O" ring.

I011246 Fig. 19

37. Fit the shim.

I011247 Fig. 20

38. Fit the bearing by pushing on it until it makes contact (1) then placing it in the retainer plate groove (2).

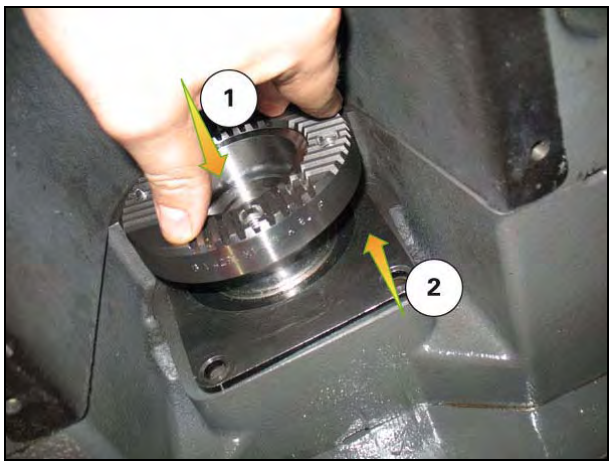

I011257 Fig. 21

39. Fit the plate screws and tighten them to a torque of 60 Nm to 70 Nm.

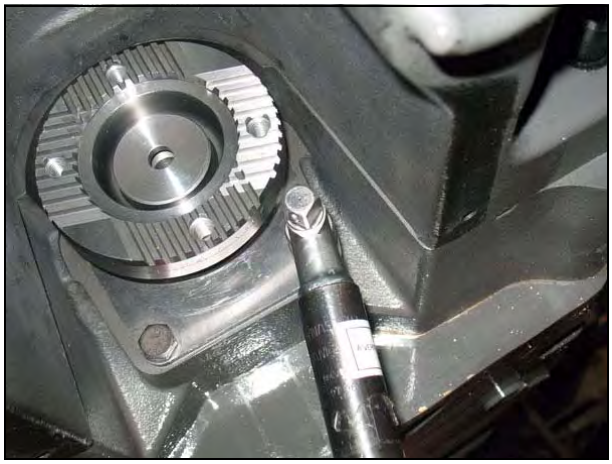

I011258 Fig. 22

40. Fit the ring.

I011259 Fig. 23

41. Fit the central screw and tighten to a torque of 120 Nm to 160 Nm.

I011227

Fig. 24

8B18

Bearings and transmission shaft - Service tools

TABLE OF CONTENTS

8C10

4WD clutch - General

TABLE OF CONTENTS

A. 4-wheel drive clutch - General

General

The front axle clutch assembly is fitted in the lower part of the gearbox. In order to access to the 4-wheel drive clutch, the transmission module must be removed.
This comprises:

1) a shaft (5) turning on two ball bearings fitted in the bore of the gearbox housing
2) a hydraulic clutch assembly integral with the rotating gear (15)
3) a disc carrier (9) centred on the shaft by needle roller bearings, which drives the clutch discs.

The helical gear (15) is constantly meshed to the idler gear on the pinion.

Declutching operation

The 4-wheel drive solenoid valve directs the 17 bar pressure inside the shaft (5) via a drilled channel in the gearbox housing.

The pressure moves the piston washer (20), which presses against the spring washers (17) via the piston (18), thus releasing the discs (30).
The disc carrier (9) integral with the shaft no longer turns.

Clutch operation

When the pressure is cut off, the spring washers are released and push the piston and piston-washer assembly; this compresses the discs (30), allowing the disc carrier (9) integral with the shaft to turn.

Blown-up view of the 4-wheel drive clutch

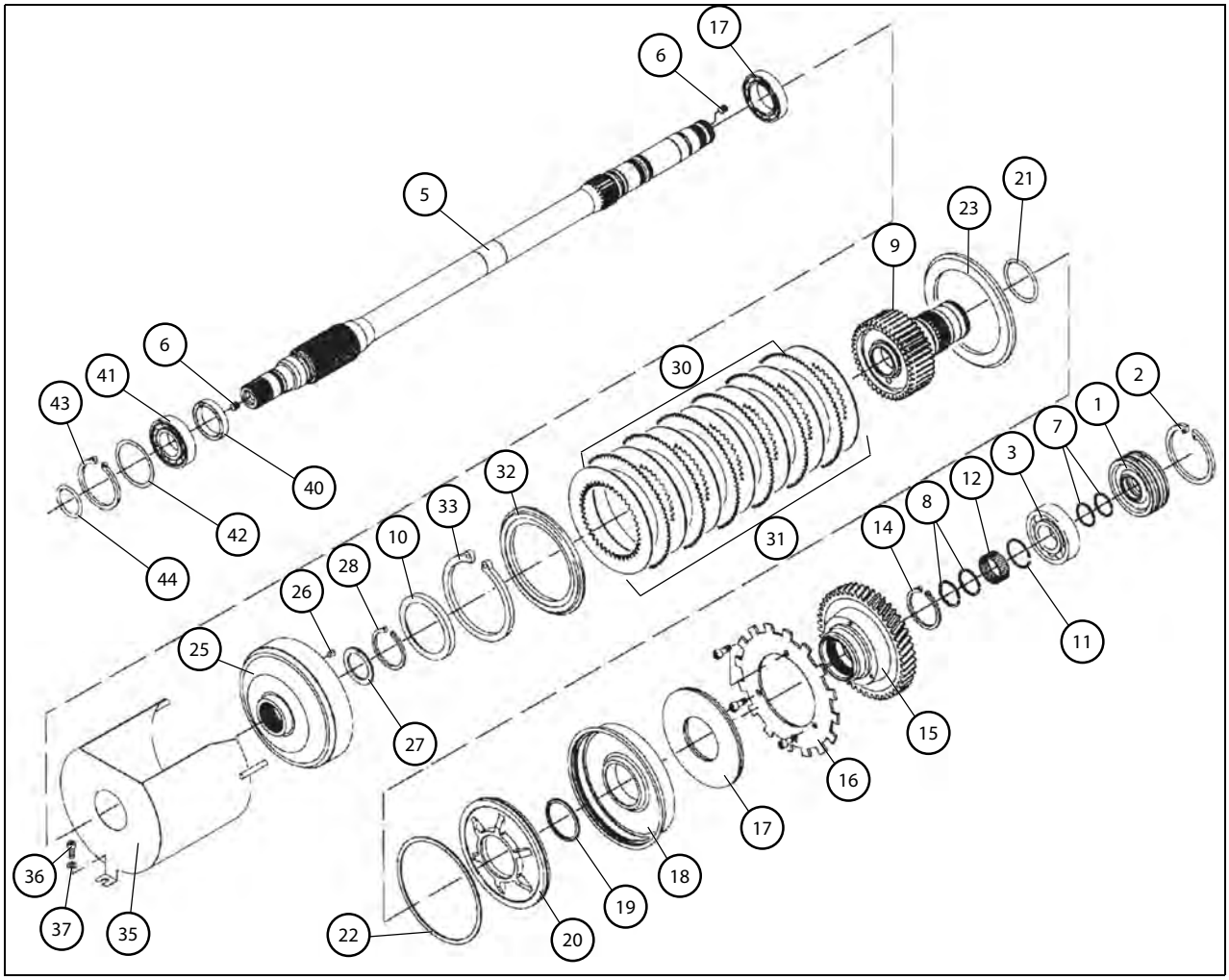

I010289

Fig. 1

8C11

4WD clutch - Error codes

TABLE OF CONTENTS

A. Reading error codes

	ERROR CODES DISPLAYED ON THE INSTRUMENT PANEL			
	DISPLAY with Dash Control Center			DISPLAY without Dash Control Center
Instrument panel		+	Letter D (Dashboard)	Letter D (Dashboard)
Engine		+	Letter E (Engine)	Letter E (Engine)
SCR system	no icon		Letter U (Urea)	Letter U (Urea)
Transmission/4WD/PTO		+	Letter T (Transmission)	Letter T (Transmission)
Lights module		+	Letter L (Light)	Letter L (Light)
ParkLock		+	Letter P (ParkLock)	Letter P (ParkLock)
Front axle		+	Letters FA (Front Axle)	Letters FA (Front Axle)
Linkage		+	Letters R (Linkage)	Letter R (Linkage)
Electrohydraulic		+	Letters H (Hydraulics)	Letter H (Hydraulics)
Cab		+	Letters C (Cab)	Letter C (Cab)
Auto-Guide		+	Letters A (Auto-Guide)	Letter A (Auto-Guide)
Control Arm		+	Letters AR (ARmrest)	Letter AR (ARmrest)

	OTHER DISPLAYS
Automatic air conditioning	Displayed on the air conditioning module.

B. Transmission error codes

No.		Components concerned	Causes
T	4105	**X34** - Transmission oil high pressure sensor 2	Signal error - 8.5 V supply error
T	4107	**X9** - Transmission oil high pressure sensor 1	Signal error - 8.5 V supply error
T	4108	**X17** - Hare/Tortoise range position sensor	Signal error - 8.5 V supply error
T	4121		Signal error
T	4127	**X10** - Collecting shaft speed sensor	Signal error
T	4128	**X18** - Transmission control module	Signal error
T	412A	**X8** - Bevel gear theoretical speed sensor	Signal error
T	412B	**X123** - Hare/Tortoise range shift switch	Signal error
T	4131	**X10** - Collecting shaft speed sensor	Direction of rotation signal error
T	4142		Rotation speed signal error
T	4144	**X25** - Engine speed sensor	Signal error
T	4145	**X8** - Bevel gear theoretical speed sensor	Signal error
T	4150	**X20** - Transmission filter blockage switch	Filter blocked
T	4153	**X19** - Transmission hydraulic oil temperature sensor	Transmission oil temperature higher than 110°C
T	4156	**X20** - Transmission filter blockage switch	Signal error
T	4158	Transmission slip monitor	The transmission output speed indicates over 30% slippage compared to the value given
T	4159	Engagement of limp home mode	Manual engagement of limp home mode without reason
			Limp home mode error
T	4161	**X14** - Tortoise range solenoid valve	Control error when shifting from Hare to Tortoise mode
T	4162	**X13** - Hare range solenoid valve	Control error when shifting from Tortoise to Hare mode
T	4163	**X11** - Solenoid valve limiting speed to 30 kph	Control error
T	4164	**X12** - Coupler function solenoid valve	PWM control error
T	4172	**X20** - Transmission filter blockage switch	Signal error
T	4173	**X19** - Transmission hydraulic oil temperature sensor	Signal error
T	4182	**X8** - Bevel gear theoretical speed sensor	Inconsistent speeds
		X10 - Collecting shaft speed sensor	
T	4183	**X8** - Bevel gear theoretical speed sensor	Inconsistent direction of rotation.
		X10 - Collecting shaft speed sensor	
T	4185	**X25** - Engine speed sensor	Inconsistent speed
T	4186	**X9** - Transmission oil high pressure sensor 1	Inconsistent values
		X34 - Transmission oil high pressure sensor 2	
T	4189	**X19** - Transmission hydraulic oil temperature sensor	Inconsistent value
T	4192	**X67** - Right-hand brake pedal sensor	Data transfer interrupted
T	4193	**X66** - Left-hand brake pedal sensor	Data transfer interrupted
T	41A0	**X18** - Transmission control module	Control of control module interrupted
T	41A1	**X18** - Transmission control module	The angle of rotation is limited, but not by the speed limiting solenoid valve
T	41A2	**X18** - Transmission control module	The CAN network control is interrupted
		X174 - Autotronic 4 transmission controller	
T	41A3	**X18** - Transmission control module	Increment sensor signal (internal actual position sensor) interrupted or illogical
T	41A4	**X18** - Transmission control module	Autotronic 4 signal interrupted or illogical
T	41A5	**X18** - Transmission control module	Reference output (Position "0") not found at start-up
T	41A6	**X18** - Transmission control module	Reference point signal interrupted during operation

No.		Components concerned	Causes
T	41B0	CAN network	Initialisation error
T	41B1	**X174** - Autotronic 4 transmission controller	Illogical range shift
T	41B2	**X174** - Autotronic 4 transmission controller	Faulty programming
T	41B3	**X174** - Autotronic 4 transmission controller	Faulty programming
T	41B4	**X174** - Autotronic 4 transmission controller	Faulty programming
T	41B5	**X174** - Autotronic 4 transmission controller	Faulty programming
T	41C1	**X174** - Autotronic 4 transmission controller	The engine has stalled due to transmission overload
T	41CF	**X174** - Autotronic 4 transmission controller	Internal error (RAM/EEPROM)
T	41E0	**X174** - Autotronic 4 transmission controller	Coupler function reference curve incorrectly interpreted, faulty programming
		X12 - Coupler function solenoid valve	Signal error
T	41E1	**X174** - Autotronic 4 transmission controller	Faulty programming
T	41E2	**X174** - Autotronic 4 transmission controller	Faulty programming
T	41E3	**X174** - Autotronic 4 transmission controller	Faulty programming
T	41E4	**X174** - Autotronic 4 transmission controller	Faulty programming
T	41E5	**X174** - Autotronic 4 transmission controller	Faulty programming
T	41E6	**X174** - Autotronic 4 transmission controller	Faulty programming
T	41E7	**X174** - Autotronic 4 transmission controller	Faulty programming
T	41E9	**X174** - Autotronic 4 transmission controller	Faulty programming
T	41EA	**X174** - Autotronic 4 transmission controller	Faulty programming
T	41EB	**X17** - Hare/Tortoise range position sensor	Calibration error or sensor value out of tolerance ranges
T	41EE	**X174** - Autotronic 4 transmission controller	Faulty programming
T	41EF	**X174** - Autotronic 4 transmission controller	Faulty programming
T	41FF	**X174** - Autotronic 4 transmission controller	Internal error (RAM/EEPROM)

C. 4WD/Differential lock error codes

No.		Components concerned	Causes
T	5131	**X137** - 4WD switch	Incorrect manual engagement signal
T	5132		Incorrect automatic engagement signal
T	5133	**X5** - 4WD solenoid valve	Control error
T	5151	**X136** - Differential lock switch	Signal error
T	5153	**X6** - Differential lock solenoid valve	Control error
T	5154	**X66** - Left-hand brake pedal sensor	Signal error
T	5555	**X67** - Right-hand brake pedal sensor	Signal error

D. Instrument panel error codes

No.		Component(s) concerned	Cause(s)
D	121		Alternator regulator voltage too high (filtered battery signal)
D	122		Alternator regulator voltage too low (filtered battery signal)
D	127	**X197** - Diesel fuel gauge	Electrical signal too high
D	128		Electrical signal too low
D	129		Battery voltage too high (non-filtered battery signal)
D	130		Battery voltage too low (non-filtered battery signal)
D	133	**X71** - Throttle pedal sensor	Electrical signal too high
D	134		Electrical signal too low
D	135	**X56** - Power Control lever**X71** - Throttle pedal sensor	Electrical signal too high - C.N.
D	136		Electrical signal too low - C.N.
D	137	**X106** - Transmission lever in armrest	Electrical signal too high
D	138		Electrical signal too low
D	139	**X68** - Clutch pedal sensor	Electrical signal too high
D	140		Electrical signal too low
D	141	**X25** - Engine speed sensor	Engine speed signal not at maximum level
D	142	**X68** - Clutch pedal sensor	Short circuit to + 12 V AC
D	143		Short circuit to + 12 V AC - C.N.
D	144	**X56** - Power Control lever	Electrical signal too high
D	145		Electrical signal too low
D	146		Electrical signal too high
D	147		Electrical signal too low
D	148	**X55** - Instrument panel	Attempt to program with engine running
D	149		CAN network deactivated (CAN bus off)
D	150		CAN messages lost
D	151		Tractor speed too high
D	152	**X55** - Instrument panel	Hourmeter error for engine maintenance
D	153		Parameter table error
D	154		CAN communications from Autotronic 4 to DCC3 - C.N. Special failed
D	155	**X55** - Instrument panel	Incorrect tractor code selected
D	156	**X68** - Clutch pedal sensor	TOC stuck open
D	157	**X25** - Engine speed sensor	No electrical signal
D	158	**X106** - Transmission lever in armrest	Incorrect calibration of armrest lever
D	159	**X56** - Power Control lever	Neutral switch error in neutral - C.N. position
D	160		Neutral switch error outside neutral - C.N. position
D	164		CAN communications from EEM to DCC3 failed
D	170	**X122** - Hand throttle	
D	183	**X235** - Front axle steering sensor (WAS sensor)	Electrical signal too high
D	184		Electrical signal too low
D	185	**X57** - DOT Matrix keyboard	Electrical signal too high
D	186		Electrical signal too low
D	189	**X55** - Instrument panel	9.5 V output - electrical signal too high
D	190		9.5 V output - electrical signal too low
D	191	**X168** - Pneumatic brake system pressure sensor	Electrical signal too high
D	192		Electrical signal too low

No.		Component(s) concerned	Cause(s)
D	193	**X144** - Variable steering setting potentiometer (fast steering)	Electrical signal too high
D	194		Electrical signal too low
D	195	**X55** - Instrument panel	Electrical signal too high
D	196		Electrical signal too low
D	197	**X1** - Auxiliary hydraulic oil temperature sensor	Electrical signal too high
D	198		Electrical signal too low

8C12

4WD clutch - Diagrams and plans

TABLE OF CONTENTS

A. Hydraulics diagram

Different systems
(1) Valve block (fuel lift/lubrication)
(2) Hydrostatic loop
(3) Settings
(4) Transmission control unit
(5) Rear axle
(6) Solenoid valve block on rear axle

Pumps
(1P1) Service pump
(1P2) Lubrication pump
(2P1) Hydrostatic pump

Drive components
(2A1) Hydrostatic motor
(2A2) Hydrostatic motor
(3A1) Piston for setting the hydrostatic pump displacement
(3A2) Piston for setting the hydrostatic motor displacement
(3A3) Forward speed limiter in limp home mode
(4A1) Forward range selector
(6A1) Rear PTO clutch
(6A3) 1000 rpm PTO selector piston
(6A4) Front axle clutch
(6A5) Rear axle differential lock
(6A6) 750 rpm PTO selector piston
(6A7) Front axle differential lock

Sensors
(1S1) Transmission oil temperature sensor
(1S2) Pressure filter blockage switch
(4S1) HP loop pressure sensor
(4S2) Pressure sensor

Other components
(1Z1) Intake filter with bypass
(1Z2) Pressure filter with bypass
(1Z3) Transmission oil cooler
(1Z4) Transmission lubrication
(3Z1) Cam channel adjustment shaft
(3Z2) Control unit
(4Z1) Clutch pedal with clutch master cylinder
(4Z2) Accumulator
(5Z2) Rear PTO lubrication
(5Z3) Differential and right-hand brake lubrication
(5Z4) Differential and left-hand brake lubrication

Valves (or spool valves/solenoid valves)
(1V1) Cooler bypass valve
(1V2) Flushing pressure relief valve
(1V3) Fuel lift pressure relief valve
(1V4) Lubricating pressure relief valve
(1V5) Service pump pressure relief valve
(1V6) System pressure relief valve
(2V1) Reverse fuel lift non-return valve
(2V2) Forward fuel lift non-return valve
(2V3) Forward high-pressure relief valve
(2V4) Reverse high-pressure relief valve
(2V5) Flushing valve
(2V6) Shuttle valve
(3V1) Hydrostatic pump control spool valve
(3V2) Hydrostatic motor control spool valve
(4V1) Hare range solenoid valve

Valves (or spool valves/solenoid valves)
(4V2) Tortoise range solenoid valve
(4V3) Forward speed limiting solenoid valve
(4V4) Coupler function solenoid valve
(4V5) Clutch function spool valve
(4V6) Rear axle pressure relief spool valve
(6V1) Rear PTO clutch solenoid valve
(6V3) 540 (or 750) rpm PTO control solenoid valve (depending on equipment)
(6V4) Front axle clutch solenoid valve
(6V5) Differential lock solenoid valve
(6V6) 1000 rpm PTO control solenoid valve

Measurement points
(M1) Pressure upstream of cooler
(M2) Lubricating pressure
(M3) Flushing pressure
(M4) Fuel lift pressure
(M5) Service pump pressure
(M6) Transmission system pressure
(M7) Range 1 engaging pressure (Tortoise)
(M8) Range 2 engaging pressure (Hare)
(M9) High pressure
(M10) Rear axle and brake system pressure
(M11) PTO clutch pressure
(M13) 540 (or 750) rpm PTO selector pressure (depending on equipment)
(M14) Front axle clutch pressure
(M15) Differential lock pressure
(M16) 1000 rpm PTO selector pressure
(M18) Lubricating pressure
(M22) Oil leak from clutch or coupler function valve

A.1 Transmission hydraulics diagram

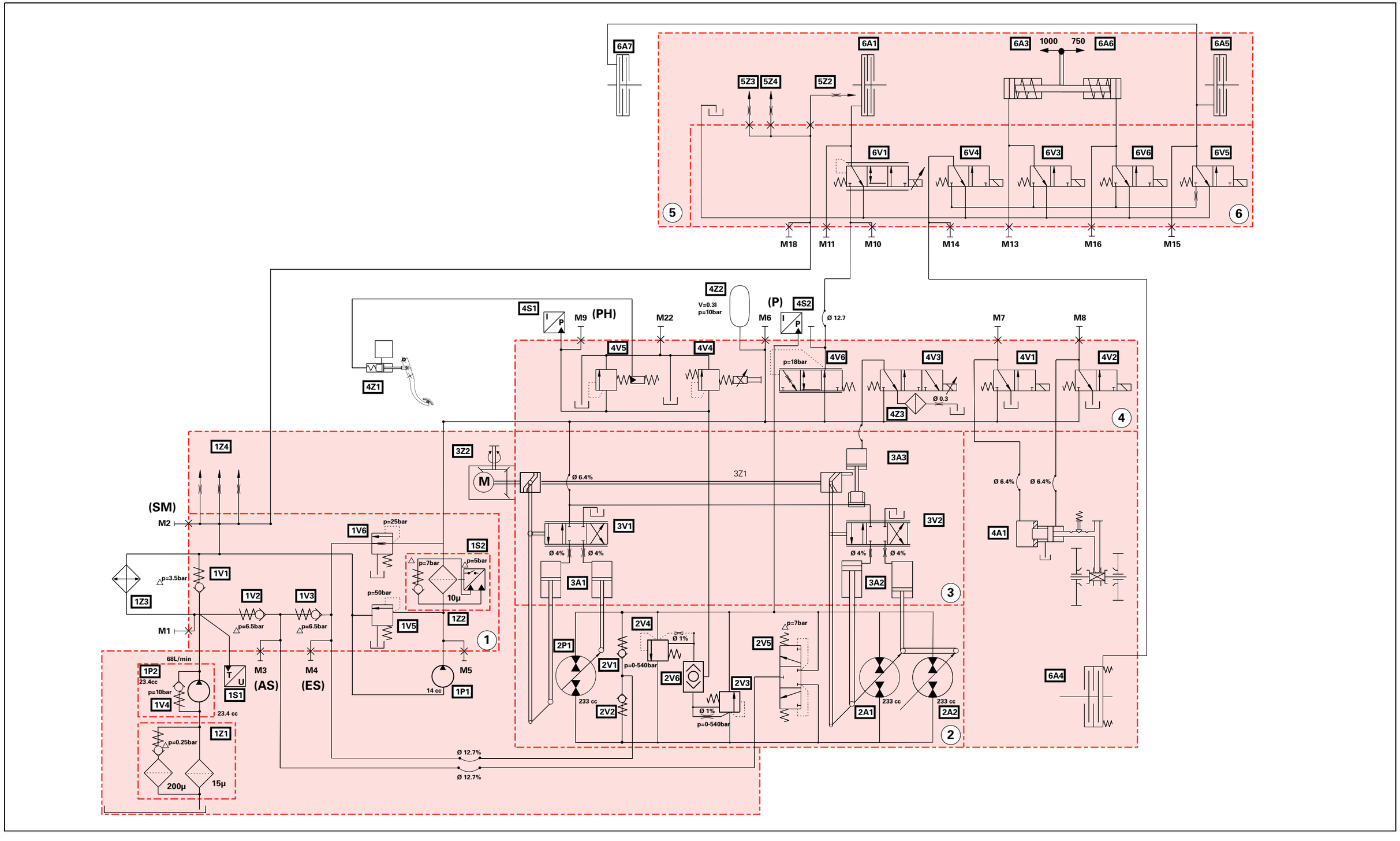

Fig. 1

B. Electrical diagrams

B.1 Identification of electrical connectors and harnesses

Identification of electrical connectors

X1 - Auxiliary hydraulic oil temperature sensor
X2 - Auxiliary hydraulic oil filter blockage switch
X3 - 540 rpm PTO speed solenoid valve
X4 - 1000 rpm PTO speed solenoid valve
X5 - 4WD solenoid valve
X6 - Differential lock solenoid valve
X7 - Rear PTO solenoid valve
X8 - Bevel gear theoretical speed sensor
X9 - Transmission oil high pressure sensor 1
X10 - Collecting shaft speed sensor
X11 - Solenoid valve limiting speed to 30 kph
X12 - Coupler function solenoid valve
X13 - Hare range solenoid valve
X14 - Tortoise range solenoid valve
X15 - PTO clutch speed sensor
X16 - PTO shaft speed sensor
X17 - Hare/Tortoise range position sensor
X18 - Transmission control module
X19 - Transmission hydraulic oil temperature sensor
X20 - Transmission filter blockage switch
X21 - ParkLock brake pressure sensor
X22 - Radar
X23 - Steering pressure sensor
X24 - Auxiliary hydraulic oil gauge
X25 - Engine speed sensor
X26 - Pneumatic brake solenoid valve
X27 - Rear linkage lifting solenoid valve
X28 - Rear linkage lowering solenoid valve
X29 - Dual Control socket connector
X30 - Rear linkage position sensor
X31 - Rear linkage right-hand draft sensor
X32 - Rear linkage left-hand draft sensor
X33 - Transmission harness CAN junction
X34 - Transmission oil high pressure sensor 2
X35 - ParkLock hydraulic system pressure sensor
X36 - LS signal breaker solenoid valve
X37 - ParkLock pressure reversing solenoid valve
X38 - Trailer braking proportional solenoid valve
X39 - Trailer braking safety solenoid valve
X40 - Front linkage single/double acting function solenoid valve
X41 - Divider solenoid valve 1
X42 - Divider solenoid valve 2
X43 - Auto-hitch lifting solenoid valve
X44 - Auto-hitch lowering solenoid valve
X45 - Bleed for pneumatic suspended cab front and rear systems
X46 - Rear left-hand ram position sensor for cab suspension
X47 - Rear right-hand unit for suspended cab
X48 - Rear left-hand unit for suspended cab
X49 - Suspended cab rear lowering solenoid valve
X50 - Suspended cab front lowering solenoid valve
X51 - Transmission harness earth (chassis)
X52 - Engine harness/transmission harness junction
X53 - Cab transmission harness/transmission harness junction
X54 - Suspended cab lifting solenoid valve
X55 - Instrument panel
X56 - Power Control lever
X57 - DOT Matrix keyboard
X58 - Windscreen wiper and indicator control unit
X59 - DOT Matrix keyboard connection on instrument panel
X60 - Engine harness/instrument panel harness junction
X61 - Cab transmission harness/engine harness junction
X62 - Instrument panel harness/cab transmission harness junction
X63 - Instrument panel harness connection on fuse box
X64 - Instrument panel harness connection on fuse box
X65 - Front windscreen wiper motor
X66 - Left-hand brake pedal sensor
X67 - Right-hand brake pedal sensor
X68 - Clutch pedal sensor
X69 - Cab interior temperature sensor
X70 - Solar radiation sensor
X71 - Throttle pedal sensor
X72 - ParkLock switch on Power Control lever
X73 - Buzzer Control
X74 - Buzzer Supply (+12 V APC)
X75 - Pillar harness/right-hand fender harness junction
X76 - Rear right-hand indicator
X77 - Rear right-hand side light and stop light
X78 - Work light on rear right-hand fender
X79 - -
X80 - -
X81 - -
X82 - -
X83 - -
X84 - -
X85 - -
X86 - -
X87 - Linkage lifting/lowering switch on right-hand fender
X88 - Rear right-hand NA indicator extension
X89 - Earth (chassis)
X90 - Pillar harness/left-hand fender harness junction
X91 - Rear left-hand indicator
X92 - Rear left-hand side light and stop light
X93 - Work light on rear left-hand fender
X94 - PTO ON/OFF switch on left-hand fender
X95 - PTO Stop switch on left-hand fender
X96 - Hydraulic spool valve switch on left-hand fender
X97 - Linkage lifting/lowering switch on left-hand fender
X98 - Rear left-hand NA indicator extension
X99 - PTO and linkage console harness/cab transmission harness junction
X100 - Instrument panel harness earth (chassis)
X101 - Instrument panel harness/electric rear-view mirror harness junction
X102 - Right-hand fender lighting harness/trailer connector harness junction
X103 - Armrest harness/cab transmission harness junction
X104 - Armrest Autotronic 5

X105 - Datatronic CCD
X106 - Transmission lever in armrest
X107 - Headland mode switch (headland function)
X108 - FingerTIP 3
X109 - FingerTIP 4
X110 - FingerTIP 5
X111 - DTM dynamic transmission mode switch
X112 - Joystick
X113 - Armrest 6-button keyboard
X114 - Supply on fuse box for 3rd spool valve
X115 - Supply on fuse box for 4th spool valve
X116 - +12 V battery supply (for lighting module)
X117 - Isobus +12 V battery power socket
X118 - Automatic PTO switch
X119 - Rear linkage lifting/lowering switch
X120 - Datatronic CCD navigation keyboard
X121 - Rear linkage height/depth adjustment thumb wheel
X122 - Hand throttle
X123 - Hare/Tortoise range shift switch
X124 - Pedal/lever mode switch
X125 - SV1 speed setting potentiometer
X126 - SV2 speed setting potentiometer
X127 - Front PTO ON/OFF switch
X128 - Rear PTO ON/OFF switch
X129 - Fuse box +12 V battery connection
X130 - FingerTIP 6 front linkage function
X131 - Front linkage suspension solenoid valve
X132 - Instrument panel harness/armrest harness junction
X133 - Console harness/cab transmission harness junction
X134 - Console harness/pillar harness junction
X135 - Braking pressure sensor
X136 - Differential lock switch
X137 - 4WD switch
X138 - Hazard warning lights indicator light and switch
X139 - Suspended front axle switch
X140 - Suspended front axle setting potentiometer
X141 - Suspended cab switch
X142 - Suspended cab setting potentiometer
X143 - Variable steering switch (fast steering)
X144 - Variable steering setting potentiometer (fast steering)
X145 - PTO/linkage console
X146 - Rear linkage suspension switch
X147 - Roof harness/pillar harness junction
X148 - Roof harness/pillar harness junction
X149 - Headlights module (black connector)
X150 - Pillar harness/cab power socket harness junction
X151 - Pillar harness/cab power socket harness junction
X152 - Start switch
X153 - Non-Isobus implement connector
X154 - Suspended front axle lifting solenoid valve
X155 - Cigarette lighter socket (power)
X156 - Cigarette lighter socket (backlighting)
X157 - Left-hand side +12 V socket (power)
X158 - Left-hand side +12 V socket (backlighting)
X159 - Suspended front axle lowering solenoid valve
X160 - Console harness earth (chassis)
X161 - Solenoid valve 1 for suspended front axle suspension
X162 - Pillar harness connection on fuse box
X163 - Solenoid valve 2 for suspended front axle suspension
X164 - Pillar harness/cab transmission harness junction
X165 - Automatic air conditioning harness/pillar harness junction
X166 - Suspended front axle position sensor
X167 - +12 V APC fuse box connection
X168 - Pneumatic brake system pressure sensor
X169 - Power socket control switch (in cab)
X170 - Pillar harness connection on fuse box
X171 - Cab transmission harness connection on fuse box
X172 - Cab transmission harness connection on fuse box
X173 - Cab transmission harness earth
X174 - Autotronic 4 transmission controller
X175 - Emergency control switch
X176 - Earth (Autotronic 4 transmission controller)
X177 - Autotronic 5 Linkage
X178 - ParkLock/suspended front axle/passive suspended cab Autotronic 5
X179 - Main lighting, sidelight/dipped light activation switch
X180 - Front windscreen washer pump
X181 - Front linkage single acting / double acting function switch
X182 - Linkage external lifting switch
X183 - Diagnostics connector (tractor-Isobus CAN)
X184 - Diagnostics connector (engine-valve CAN)
X185 - Sisu EEM unit
X186 - Starter
X187 - Engine start relay
X188 - Engine identification module (ID module)
X189 - Fuel lift pump
X190 - Vistronic fan
X191 - Diesel fuel preheater
X192 - B + alternator 1
X193 - B + alternator 2
X194 - D + alternator 1
X195 - D + alternator 2
X196 - In line fuse (225 A)
X197 - Diesel fuel gauge
X198 - Pneumatic trailer brake sensor
X199 - Work light on left-hand step
X200 - Work light on right-hand step
X201 - Engine harness earth
X202 - Front accessory connection socket harness/front function harness junction
X203 - Engine harness/front headlights harness junction
X204 - Cooling unit harness/engine harness junction
X205 - Front axle harness/engine harness junction
X206 - Sensor detecting water in the diesel fuel
X207 - Pneumatic seat adjustment control
X208 - Front linkage suspension switch LED
X209 - Rear linkage external lowering switch
X210 - Orbitrol steering sensor (SASA sensor)
X211 - Rear Dual Control connector

X212 - Instrument panel harness/armrest harness junction
X213 - Power socket for additional heating
X214 - Armrest harness/cab transmission harness junction
X215 - Trailer connector (right-hand side light and number plate lights)
X216 - Reversing light
X217 - Isobus CAN connector
X218 - External Isobus tool connector
X219 - Cab Isobus harness/external Isobus harness junction
X220 - Trailer connector (left-hand side light)
X221 - Trailer connector (right-hand indicator)
X222 - Trailer connector (left-hand indicator)
X223 - Trailer connector (brake lights)
X224 - Trailer connector (earth)
X225 - Trailer connector (reversing light)
X226 - Trailer connector harness earth
X227 - Console harness/cab transmission harness junction
X228 - Front linkage single/double-acting function LED
X229 - 120 Ohm CAN 1 resistor (cab transmission harness)
X230 - 120 Ohm CAN 2 resistor (cab transmission harness)
X231 - 120 Ohm CAN 3 resistor (cab transmission harness)
X232 - 120 Ohm CAN 4 resistor (cab transmission harness)
X233 - Cab transmission harness/Isobus harness junction
X234 - 120 Ohm CAN ATC resistor
X235 - Front axle steering sensor (WAS sensor)
X236 - Electrohydraulic Orbitrol (grey connector)
X237 - Electrohydraulic Orbitrol (black connector)
X238 - Connector 1 for valve harness
X239 - Connector 2 for valve harness
X240 - 120 Ohm resistor for electrohydraulic spool valves
X241 - Sisu engine preheating supply (Grid Heater)
X242 - Exhaust temperature sensor
X243 - AdBlue/DEF reservoir (urea) level gauge and temperature sensor
X244 - CAN SCR harness
X245 - +12 V APC supply for SCR
X246 - Auto-Guide external harness/engine harness junction
X247 - Roof harness/electric rear-view mirror harness junction
X248 - Right and left-hand electric rear-view mirror adjustment switch
X249 - External rear-view mirror defroster switch
X250 - Power socket in cab
X251 - In line fuse (225 A)
X252 - Automatic air conditioning condenser
X253 - Air filter vacuum sensor
X254 - Horn (earth)
X255 - Horn
X256 - Roof harness/hand rail harness junction
X257 - Side light and indicator on hand rail (right and left)
X258 - Main beam on hand rail (right and left)
X259 - Hand rail upper work light
X260 - Hand rail upper work light
X261 - Front right-hand unit for suspended cab
X262 - Front left-hand unit for suspended cab
X263 - Floating stop relay control (US front-end loader)
X264 - Front linkage suspension switch
X265 - Rear linkage suspension switch indicator light
X266 - Rear linkage diagnostic and lifting/lowering LEDs
X267 - Switch for left-hand side heater
X268 - Pillar harness connection on fuse box
X269 - Cab suspension harness/cab transmission harness junction
X270 - Front accessories connection socket (rotary beacon)
X271 - Front accessories connection socket (+12 V battery)
X272 - Front accessories connection socket (+12 V APC)
X273 - Front accessories connection socket (main beam light)
X274 - Front accessories connection socket (main beam light)
X275 - Front accessories connection socket (work light)
X276 - Earth for front accessory connection socket harness
X277 - Front linkage lifting/lowering external control
X278 - Front linkage lifting switch (external)
X279 - Dual Control or TIC position sensor
X280 - Front linkage rams pressure sensor
X281 - Solenoid valve for front PTO
X282 - Roof harness/cab Auto-Guide harness junction
X283 - TopDock
X284 - Headlights module keyboard
X285 - Ad Blue (urea) metering valve
X286 - Ad Blue (urea) injection valve
X287 - Ad Blue (urea) reservoir preheating valve
X288 - 12/24 V converter for SCR system
X289 - SCR management module
X290 - Front accessory connection socket harness/front function harness junction
X291 - Front accessory connection socket harness/front function harness junction
X292 - Front windscreen washer pump
X293 - 540 rpm PTO switch
X294 - 540 eco rpm PTO switch
X295 - 1000 rpm PTO switch
X296 - USB connector
X297 - PTO/linkage console backlighting
X298 - Headland mode switch (headland function)
X299 - Linkage lowering speed potentiometer
X300 - -
X301 - PTO stop switch on left-hand fender
X302 - Switch for pre-selected engine speed A
X303 - Switch for pre-selected engine speed B
X304 - Instrument panel harness/armrest harness junction
X305 - Headlights module (grey connector)
X306 - Switch for pre-selected engine speed A/B
X307 - FingerTIP 1
X308 - FingerTIP 2
X309 - SV1/SV2 speed regulator switch

X310 - Divider 1 indicator light and solenoid valve (earth)
X311 - Divider 2 indicator light and solenoid valve (+12 V)
X312 - SV1/SV2 speed setting potentiometer in armrest
X313 - Pedal/lever transmission control mode switch and DTM switch
X314 - Hydraulics switch 1, road/field mode
X315 - Hydraulics switch 2, road/field mode
X316 - Headland mode switch (headland function)
X317 - + battery supply for headlights module
X318 - Automatic air conditioning compressor
X319 - + battery supply for headlights module
X320 - + battery supply on headlights module
X321 - + battery supply on headlights module
X322 - + battery supply on headlights module
X323 - + battery supply on headlights module
X324 - +12 V APC fuse box connector (battery isolator switch)
X325 - Pillar harness / non-Isobus implement connector harness junction
X326 - Pillar harness / non-Isobus implement connector harness junction
X327 - Battery earth (chassis)
X328 - Battery isolator switch earth terminal
X329 - Battery isolator switch earth terminal
X330 - Battery negative terminal contact (battery isolator switch)
X331 - Pillar harness connection on fuse box
X332 - + battery (start switch)
X333 - Engine harness earth (chassis)
X334 - Battery isolator switch earth terminal
X335 - Battery isolator switch earth terminal
X336 - Battery isolator switch
X337 - Pneumatic brake ParkLock solenoid valve
X338 - Earth (battery isolator switch)
X339 - Pneumatic trailer braking solenoid valve
X340 - + terminal on battery for fuse box
X341 - Starter supply
X342 - Positive battery terminal
X343 - RS232 diagnostics connector for Auto-Guide
X344 - Isobus connector in cab
X345 - Supply for additional terminal (mitron unit)
X346 - Auto-Guide switch
X347 - Cab transmission harness connection on fuse box
X348 - Cab transmission harness connection on fuse box
X349 - -
X350 - Front right-hand grille work light
X351 - Front right-hand grille work light
X352 - Front right-hand grille work light
X353 - Front left-hand grille work light
X354 - Front left-hand grille work light
X355 - Front left-hand grille work light
X356 - Right-hand main beam and dipped light
X357 - Left-hand main beam and dipped light
X358 - Outside temperature sensor
X359 - Cab suspension harness/cab transmission harness junction
X360 - Pillar harness connection on fuse box
X361 - Pillar harness connection on fuse box
X362 - Fuse box (+12 V battery)
X363 - Auto-hitch (Dromone) switch
X364 - 120 Ohm resistor for Auto-Guide/Isobus CAN network
X365 - Hand rail lower work light
X366 - Pneumatic brake harness / transmission harness junction
X367 - Switch 1 on joystick
X368 - Switch 2 on joystick
X369 - Engine speed + switch
X370 - Engine speed - switch
X371 - Engine speed stop switch
X372 - Orbitrol safety solenoid valve
X373 - Left-hand 12 V socket (cab) (power)
X374 - Left-hand 12 V socket (cab) (backlighting)
X375 - Instrument panel harness/cab transmission harness junction
X376 - Fuse box (reserve for + APC)
X377 - Fuse box (supply for cab suspension compressor)
X378 - FNRP lever and button
X379 - Front left-hand work light on roof
X380 - Front right-hand work light on roof
X381 - Front left-hand work light on roof
X382 - Front right-hand work light on roof
X383 - Front left-hand roof indicator
X384 - Front right-hand roof indicator
X385 - Rear left-hand work light on roof
X386 - Rear right-hand work light on roof
X387 - Rear left-hand work light on roof
X388 - Rear right-hand work light on roof
X389 - Rear left-hand work lights
X390 - Rear right-hand work lights
X391 - Rear left-hand roof indicator
X392 - Rear right-hand roof indicator
X393 - Earth
X394 - Radio aerial connector
X395 - Radio supply
X396 - Radio speaker connector
X397 - Front left-hand speaker
X398 - Front right-hand speaker
X399 - Rear left-hand speaker (+ supply)
X400 - Rear right-hand speaker (+ supply)
X401 - Rear left-hand speaker (- supply)
X402 - Rear right-hand speaker (- supply)
X403 - Rear windscreen wiper motor
X404 - Door switch
X405 - Interior light (earth)
X406 - Interior light (control)
X407 - Interior light (+12 V battery supply)
X408 - Right-hand console light
X409 - Left-hand rotary beacon
X410 - Right-hand rotary beacon
X411 - Rear windscreen wiper switch
X412 - Radio aerial
X413 - Earth (aerial)
X414 - Left-hand number plate light
X415 - Right-hand number plate light
X416 - Radio supply
X417 - Radio speaker connector
X418 - Earth
X419 - Earth
X420 - Rotary beacon harness earth (chassis)

X421 - Earth
X422 - Roof harness earth (chassis)
X423 - Left-hand side fan ON/OFF switch
X424 - Fan speed control knob
X425 - Air conditioning switch
X426 - Air conditioning indicator light
X427 - Manual air conditioning module
X428 - Electronic thermostat for heating
X429 - Speed 1relay for fan
X430 - Speed 2relay for fan
X431 - Speed 3relay for fan
X432 - Speed 4relay for fan
X433 - Left-hand heating resistor
X434 - Right-hand fan
X435 - Left-hand fan
X436 - Left-hand side fan switch
X437 - Relay for left-hand side fan
X438 - Earth (automatic air conditioning)
X439 - Air conditioning control module (blue connector)
X440 - Air conditioning control module (yellow connector)
X441 - Heating temperature sensor
X442 - TT2 sensor
X443 - Evaporator temperature sensor
X444 - Right-hand fan adapter module (signal)
X445 - Left-hand fan adapter module
X446 - Right-hand fan adapter module (supply)
X447 - Left-hand fan adapter module (supply)
X448 - Separation harness for automatic air conditioning
X449 - Motor for left-hand heating shutter
X450 - Motor for right-hand heating shutter
X451 - Motor for heating mixer shutter
X452 - Relay for heater pump
X453 - Heater accelerator pump
X454 - Earth (roof)
X455 - Roof harness earth
X456 - Solar panel
X457 - Earth (Auto-Guide)
X458 - Cab transmission harness/pillar harness junction
X459 - Linkage lifting switch on fender
X460 - Linkage lowering switch on fender
X461 - Pillar harness/TECU harness junction
X462 - Supply indicator light for power socket on pillar
X463 - Earth (Isobus)
X464 - Pillar harness/armrest harness junction
X465 - Battery positive terminal contact
X466 - Active suspended cab Autotronic 5
X467 - Right-hand electric rear-view mirror
X468 - Left-hand electric rear-view mirror
X469 - Additional fan connection
X470 - Operator presence in seat switch
X471 - Suspended cab harness connection

Identification of harnesses
FAI200 - Engine harness
FAI201 - Front headlights harness
FAI202 - Suspended front axle harness
FAI203 - Transmission harness
FAI204 - Cab/platform linkage external harness
FAI205 - Electrohydraulic valves harness
FAI206 - Transmission harness — PTO
FAI207 - Front Dual Control harness
FAI208 - Linkage with Dual Control and TIC harness
FAI209 - Instrument panel harness
FAI210 - Cab transmission harness
FAI211 - Cab linkage harness
FAI212 - Lighting harness
FAI213 - Cab interior lighting harness
FAI214 - Armrest harness
FAI215 - Pillar harness
FAI216 - Diagnostics connector harness
FAI217 - Datatronic 3 harness
FAI218 - Fieldstar harness
FAI219 - Cab interior power socket harness
FAI220 - BOC harness — safety switch
FAI221 - Automatic air conditioning harness — instrument panel
FAI222 - Autotronic 5 ParkLock/suspended front axle harness
FAI223 - Roof harness
FAI224 - Hand rail lighting harness
FAI225 - Electric rear-view mirror harness
FAI226 - Roof/external harness
FAI227 - Automatic air conditioning harness - roof
FAI228 - Number plate lighting harness
FAI229 - Xenon light adapter harness
FAI230 - GSPTO harness
FAI231 - Transmission harness — ParkLock
FAI232 - Radio harness
FAI235 - Front accessory connection socket harness
FAI236 - Start-up harness
FAI237 - +12 APC fuse box harness
FAI238 - +12 APC instrument panel harness
FAI239 - Permanent +12 V supply harness
FAI240 - +12 V permanent fuse box harness
FAI241 - Automatic air conditioning adapter harness
FAI242 - Main beams on hand rail adapter harness
FAI243 - Circuit breaker harness
FAI244 - Linkage external controls extension harness
FAI245 - Left-hand linkage external controls harness
FAI246 - Right-hand linkage external controls harness
FAI247 - PTO shunt harness
FAI248 - Linkage external controls harness
FAI249 - Suspended front axle harness
FAI250 - Engine harness
FAI251 - Parking brake harness
FAI252 - +12 V battery harness
FAI253 - Hand rail harness
FAI254 - Windscreen wiper harness
FAI255 - Windscreen wiper harness
FAI256 - High-visibility roof heating harness
FAI257 - High-visibility roof heating harness
FAI258 - Roof earth harness
FAI260 - Cooling unit harness
FAI261 - Isobus harness
FAI262 - Auto-Guide engine harness
FAI263 - Auto-Guide cab adapter harness
FAI265 - Pneumatic brake harness
FAI267 - Console harness
FAI268 - Front function harness
FAI271 - Cab electric rear-view mirror harness
FAI272 - Active suspended cab harness

FAI273 - Front linkage harness
FAI274 - Rear right-hand lighting harness
FAI275 - Trailer connector harness
FAI276 - Rear left-hand lighting harness
FAI280 - Negative battery harness
FAI281 - Negative battery harness
FAI282 - Negative battery harness
FAI283 - TopDock harness
FAIxxx - Non-Isobus tool connector harness
FAIxxx - Non-Isobus implement connector controller harness
FAIxxx - Additional fan harness

B.2 Fuse box supply with circuit breaker

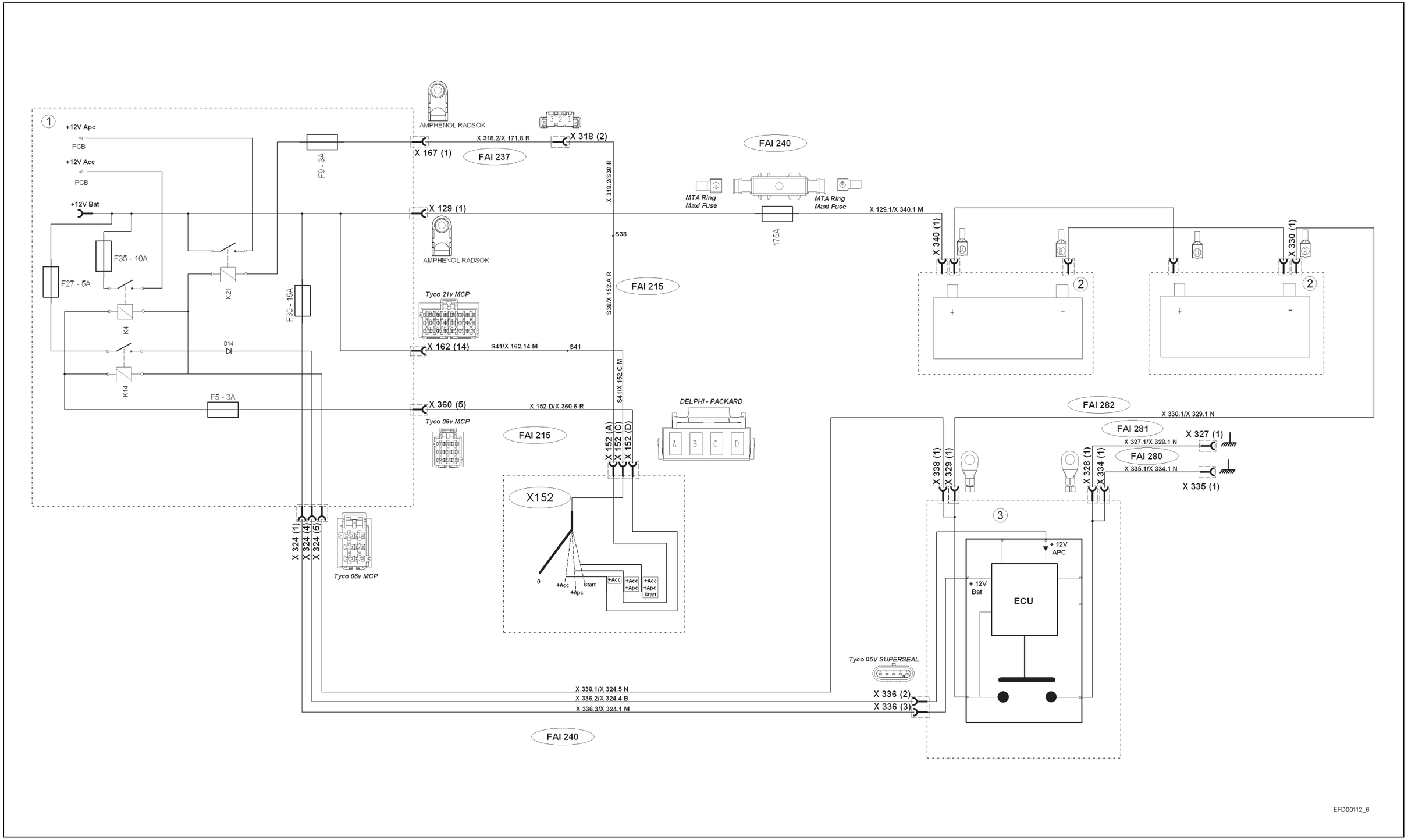

Fig. 2

B.3 Autotronic 4 electrical power supply

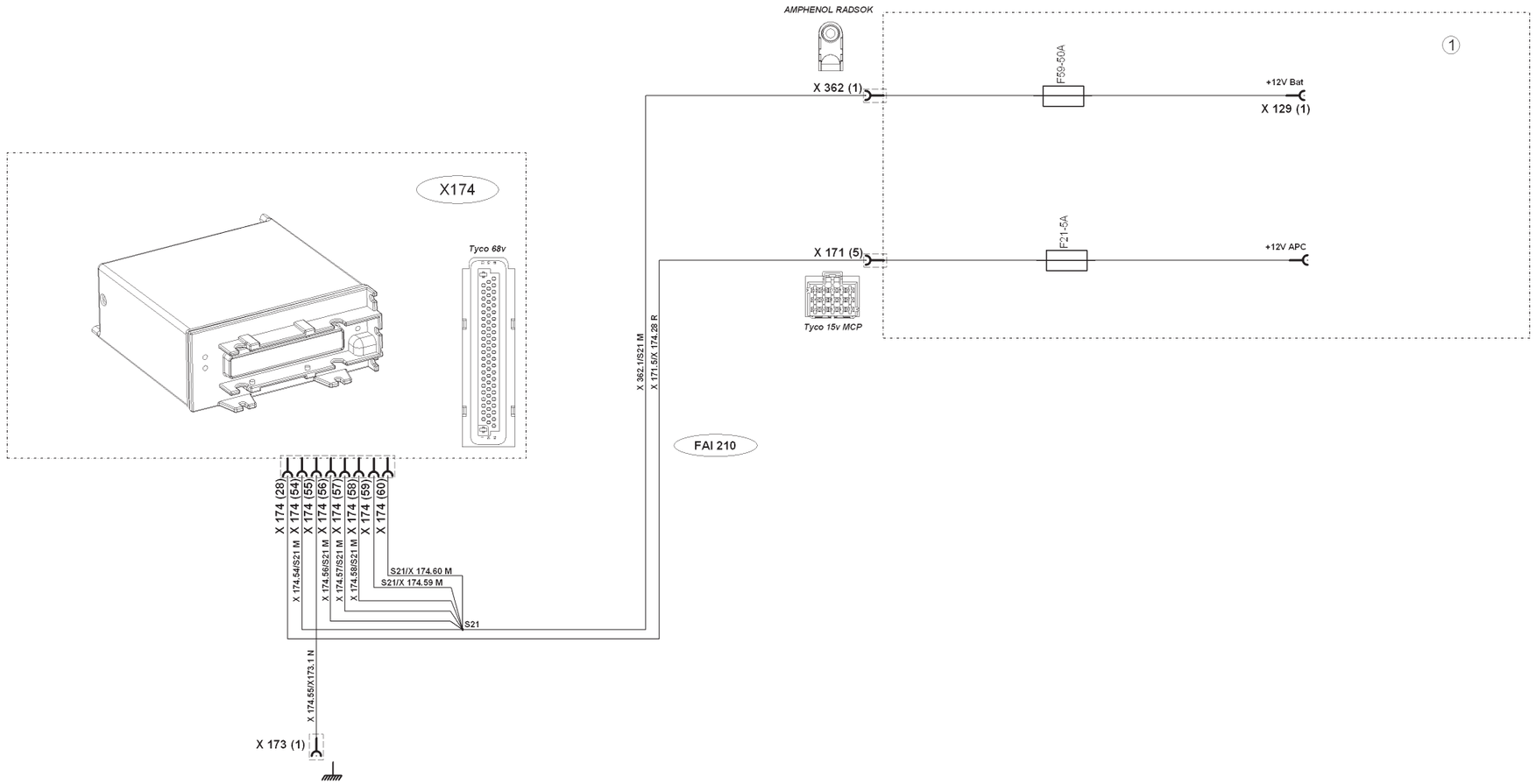

Fig. 3

B.4 Autotronic 5 linkage electrical power supply

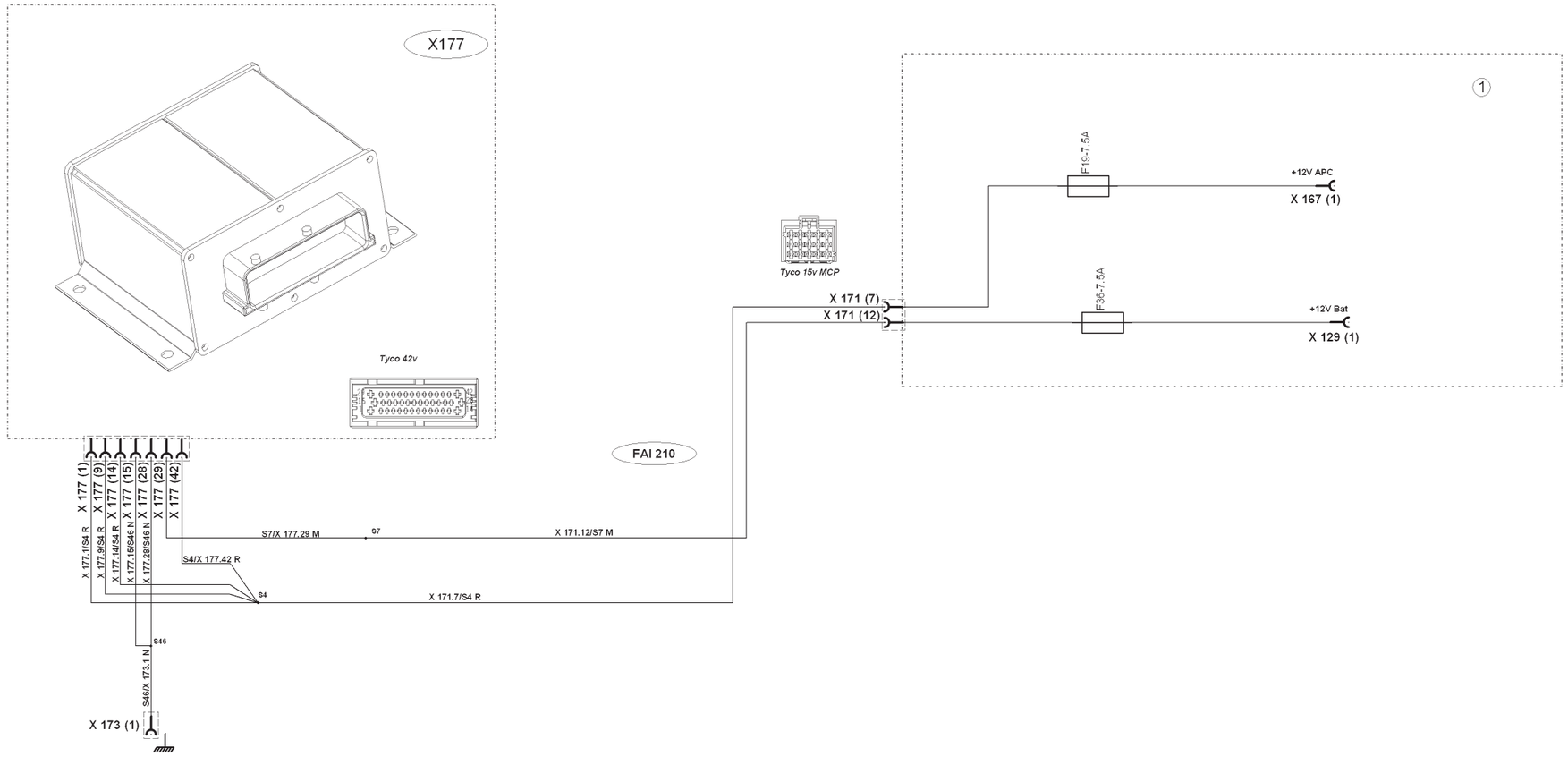

Fig. 4

B.5 Autotronic 5 ParkLock/suspended front axle electrical power supply

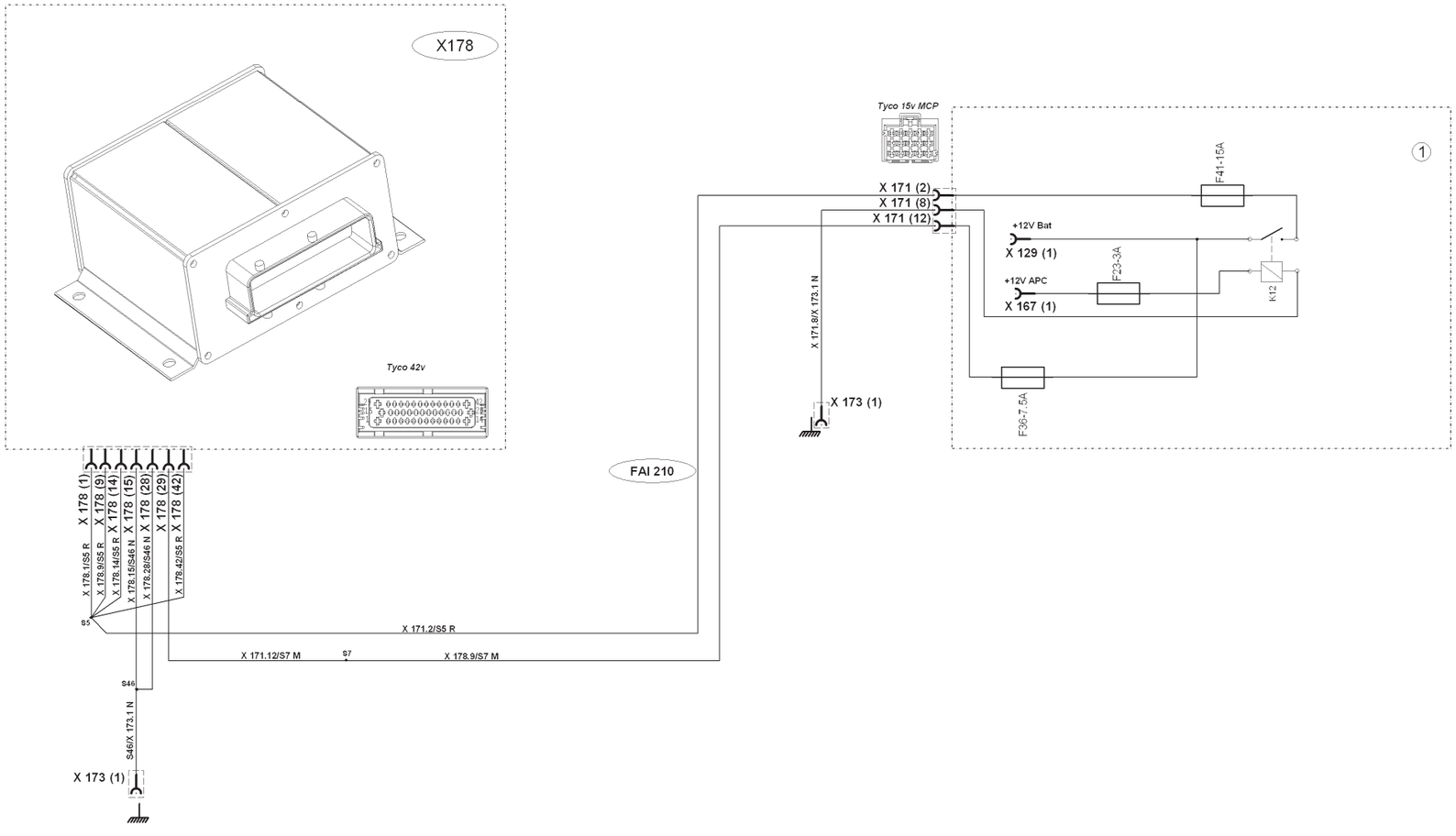

Fig. 5

B.6 DCC3 instrument panel electrical power supply

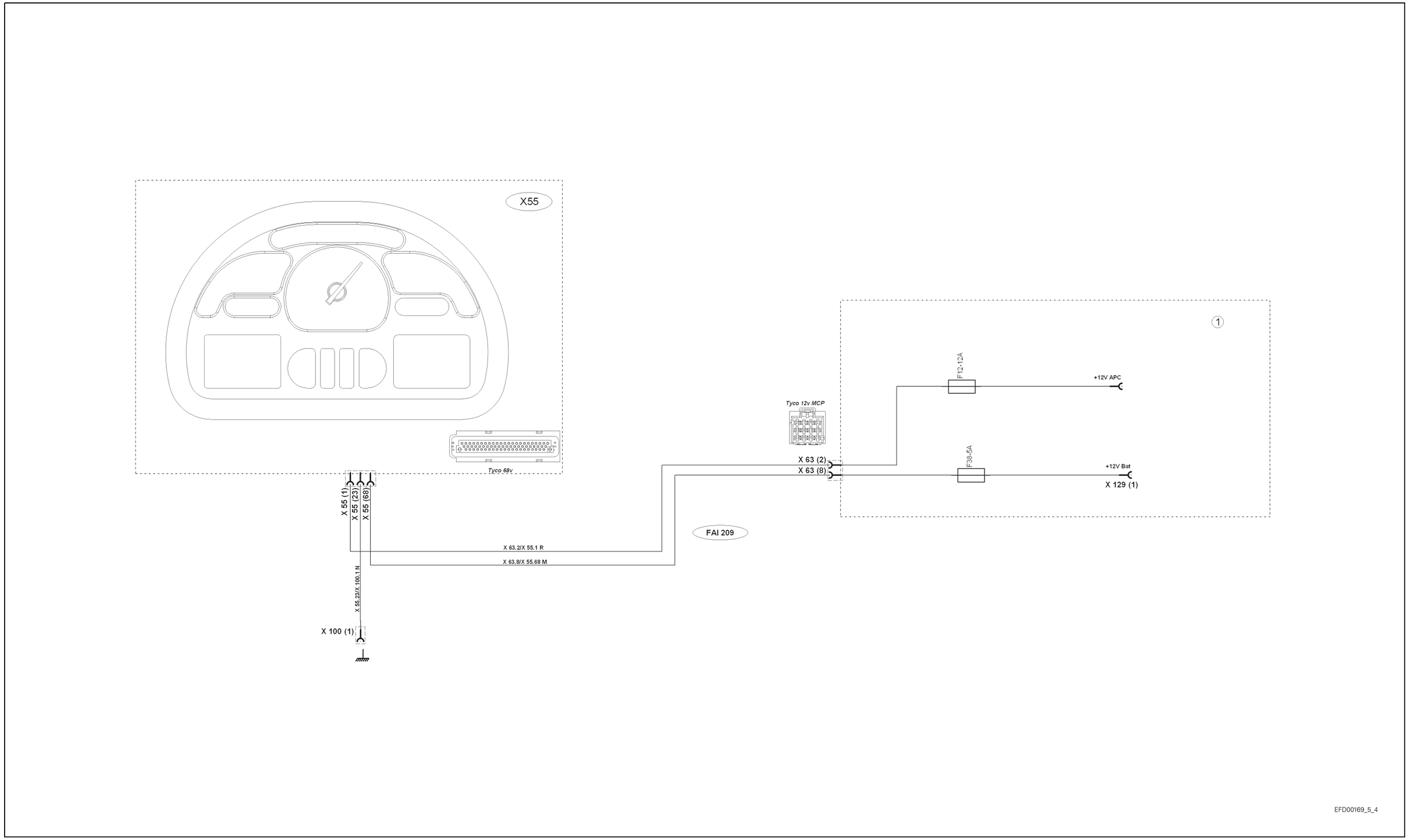

Fig. 6

B.7 Autotronic 5 armrest electrical power supply

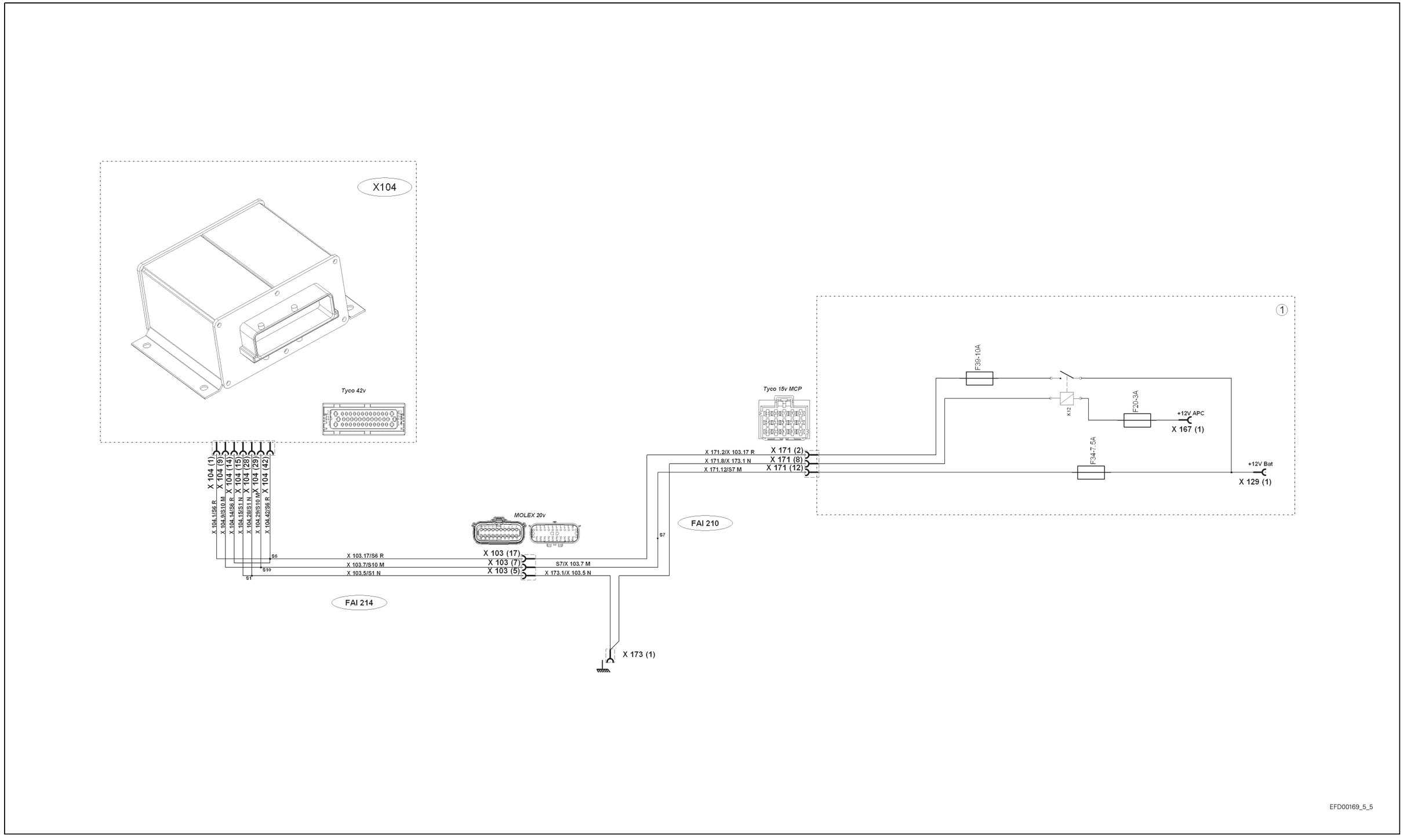

Fig. 7

B.8 Autotronic 5 active suspended cab electrical power supply

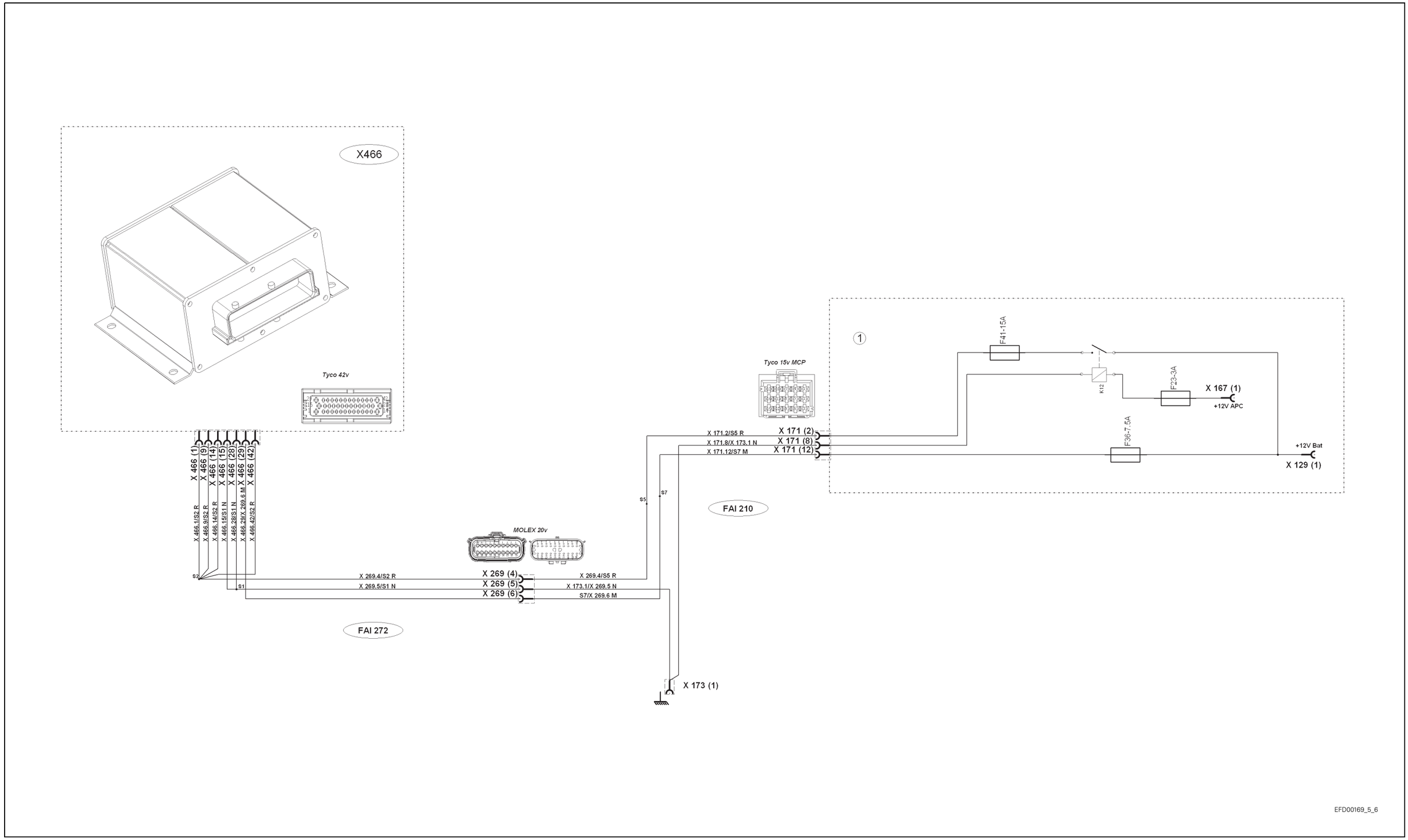

Fig. 8

B.9 Sisu EEM electronic unit electrical power supply

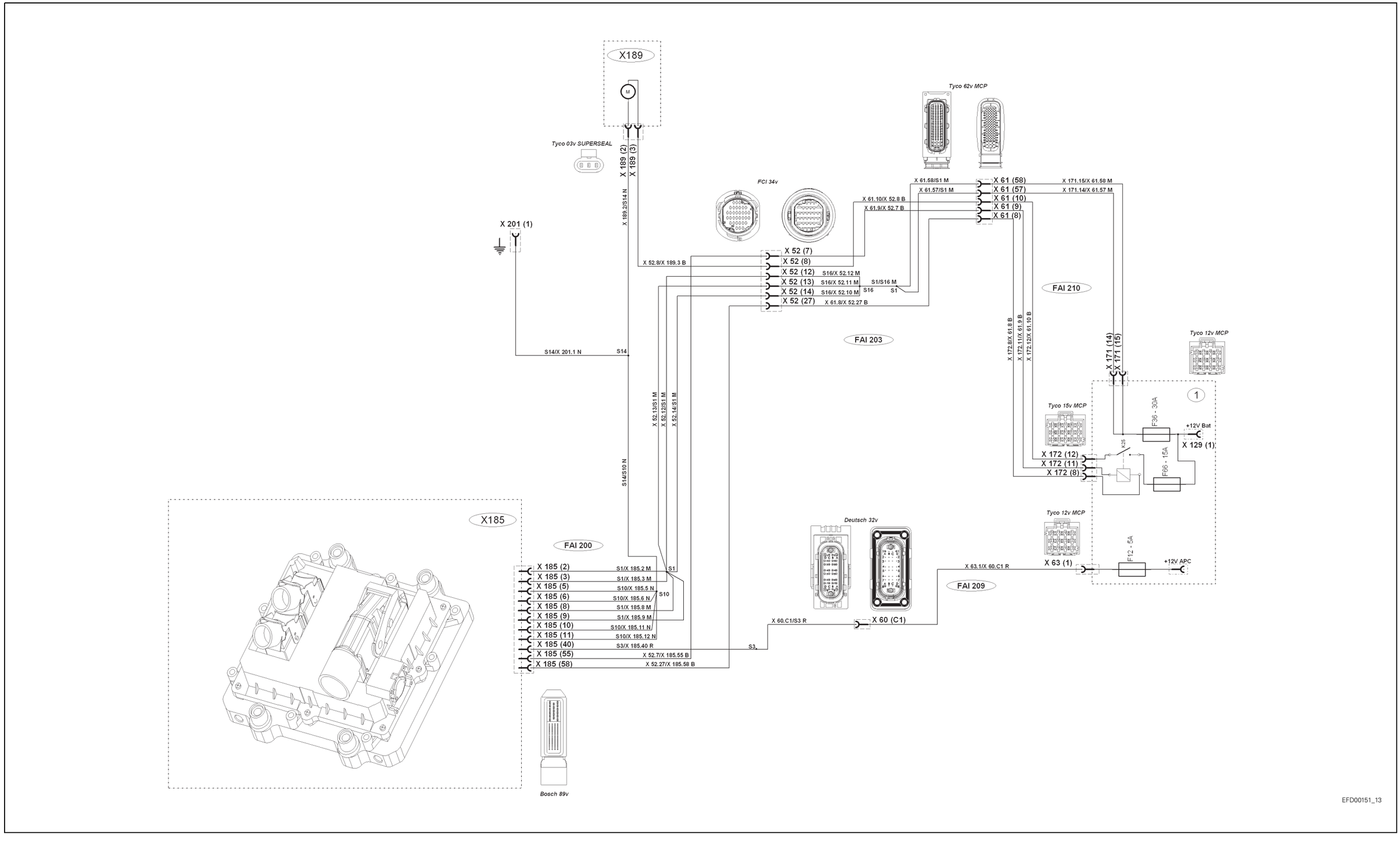

Fig. 9

B.10 Automatic air-conditioning unit electrical power supply

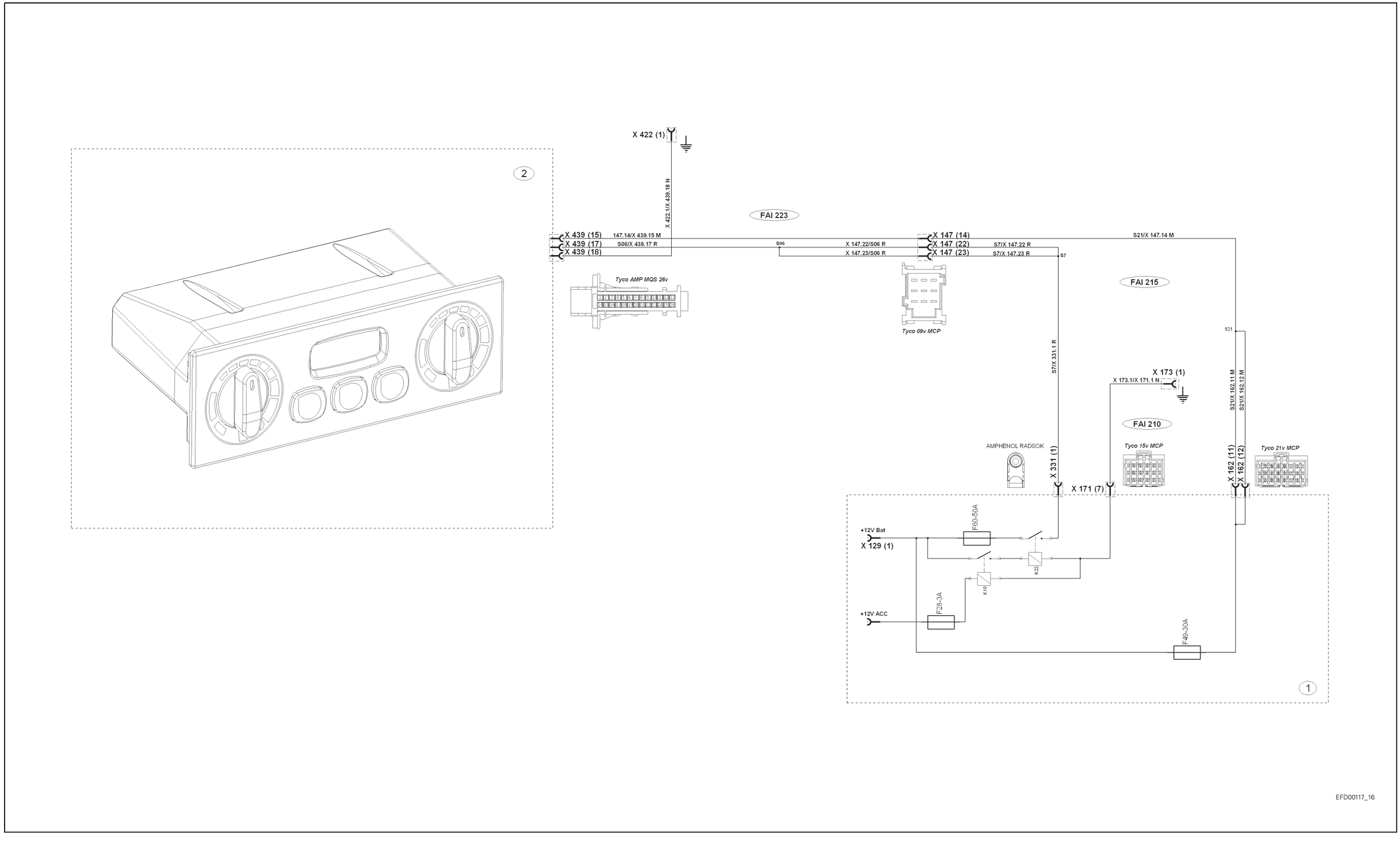

Fig. 10

B.11 Diagnostics connector electrical power supply

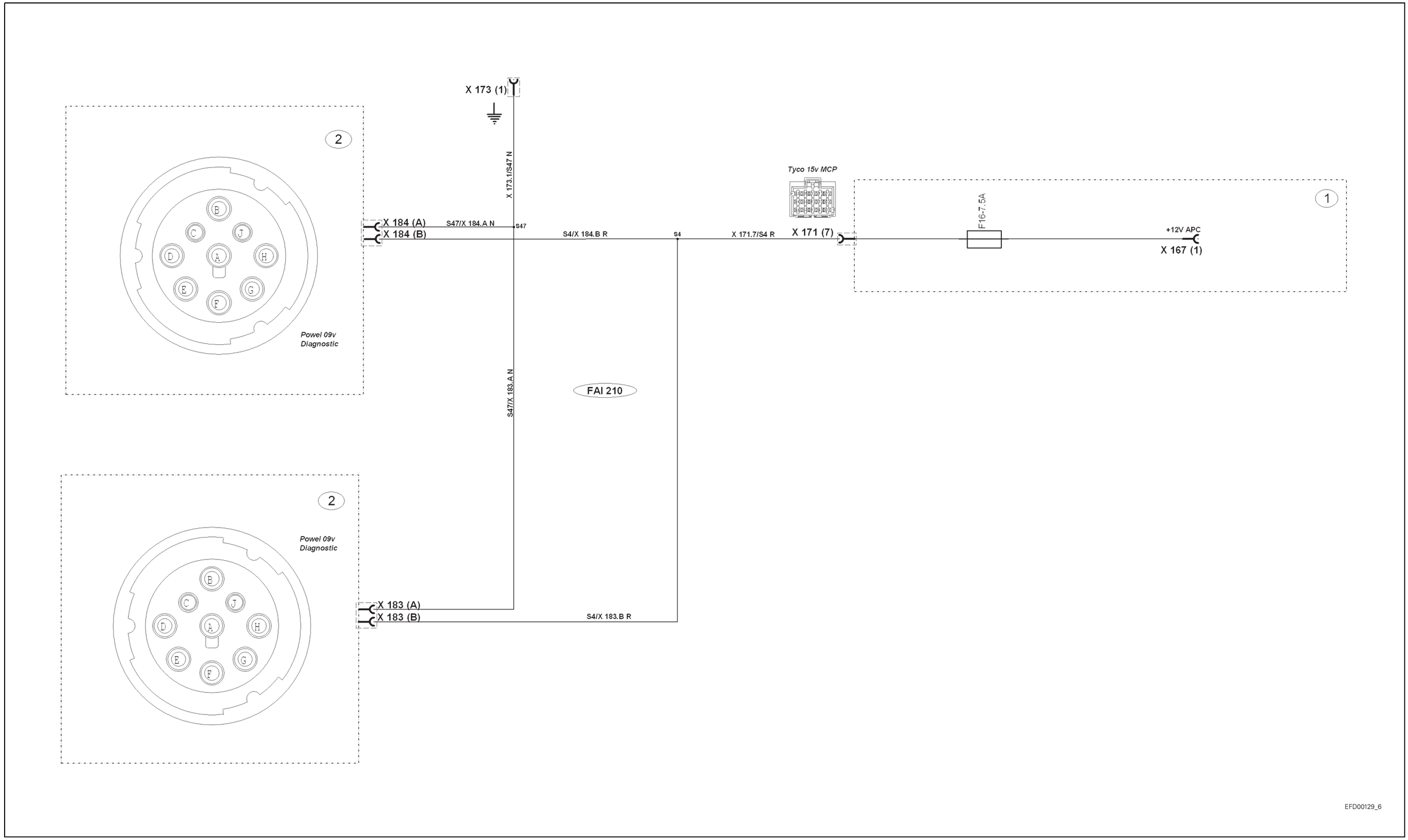

Fig. 11

B.12 Tractor CAN network

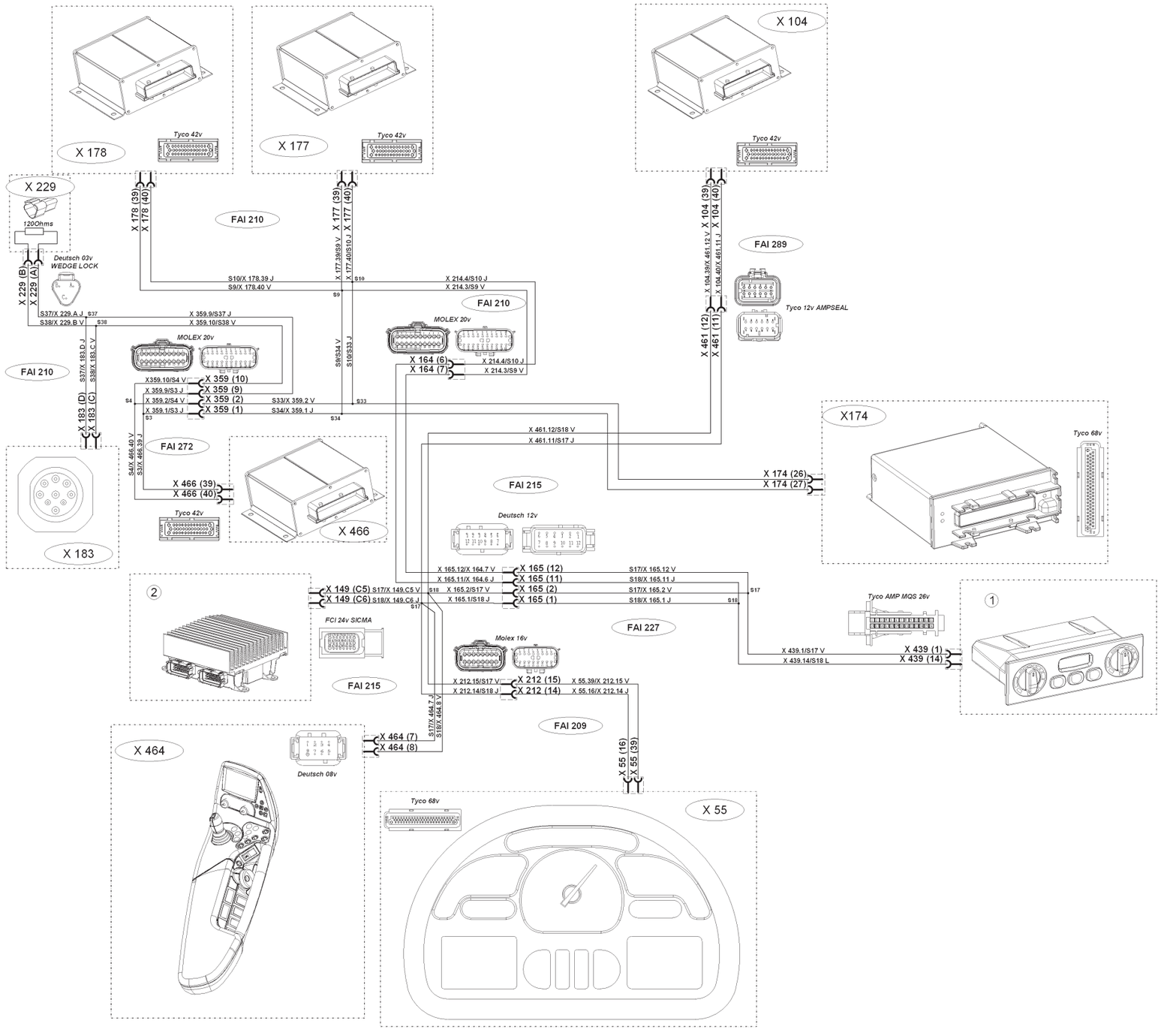

Fig. 12

B.13 Engine CAN network

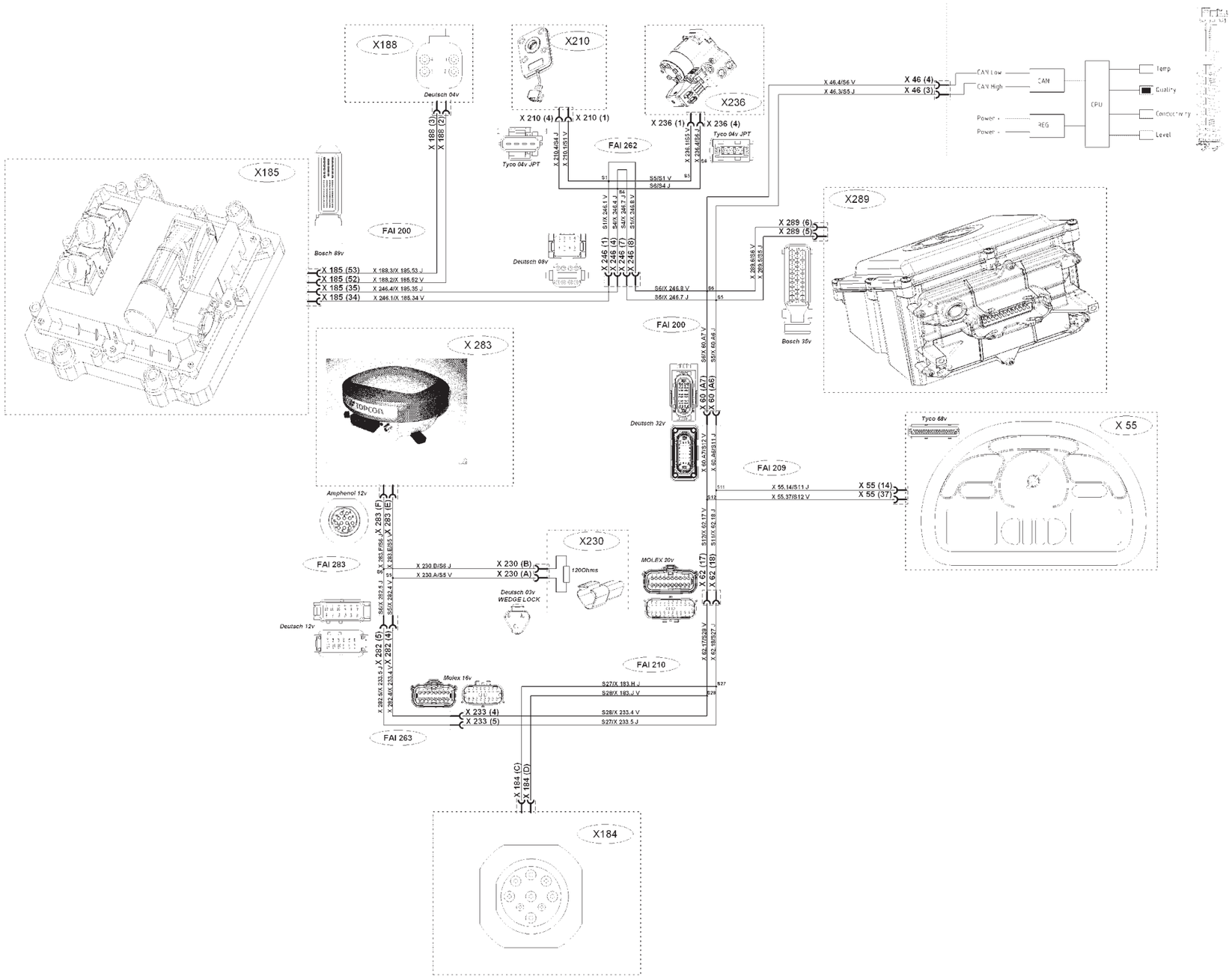

Fig. 13

B.14 Linkage CAN network

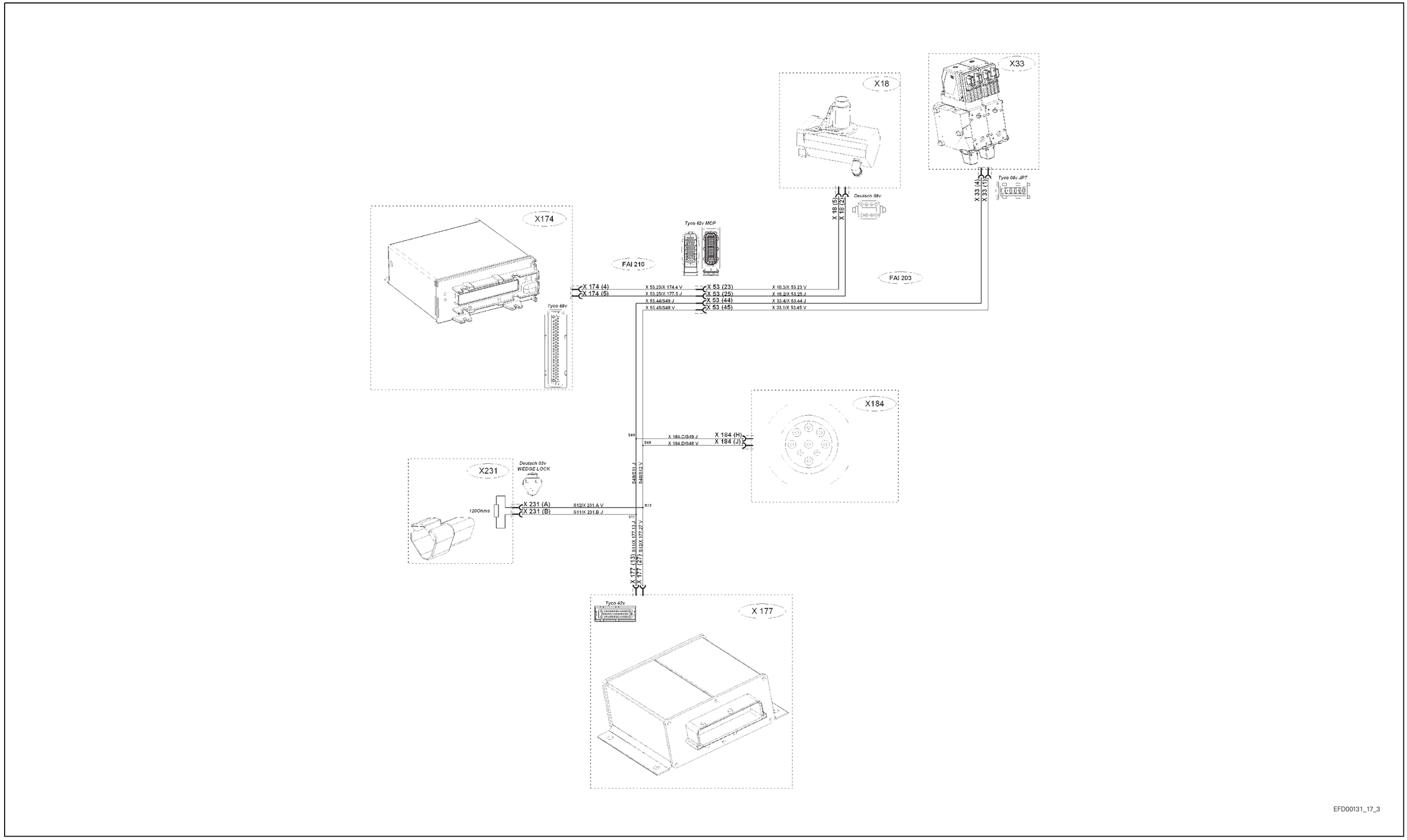

Fig. 14

B.15 Isobus CAN network

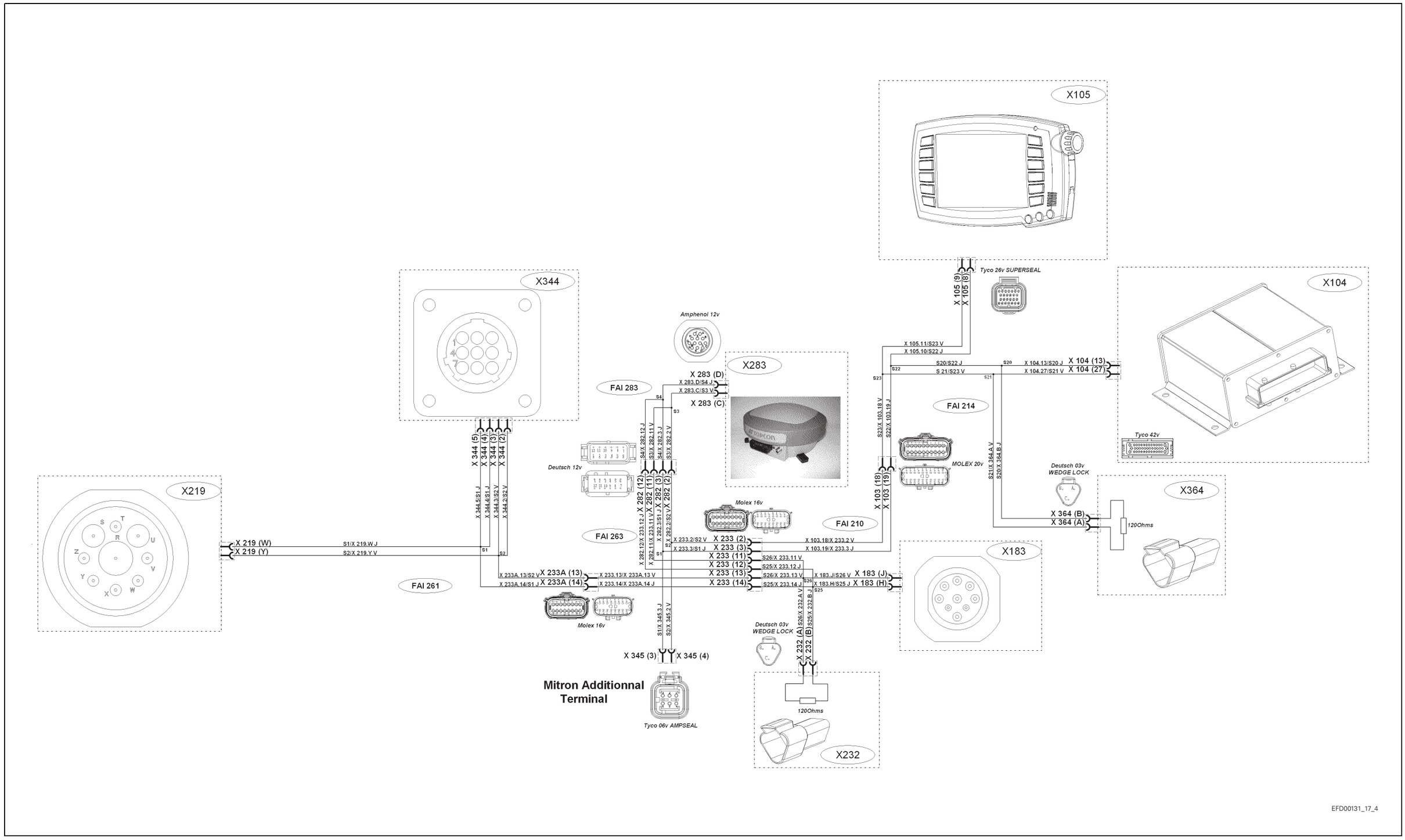

Fig. 15

B.16 4WD front axle

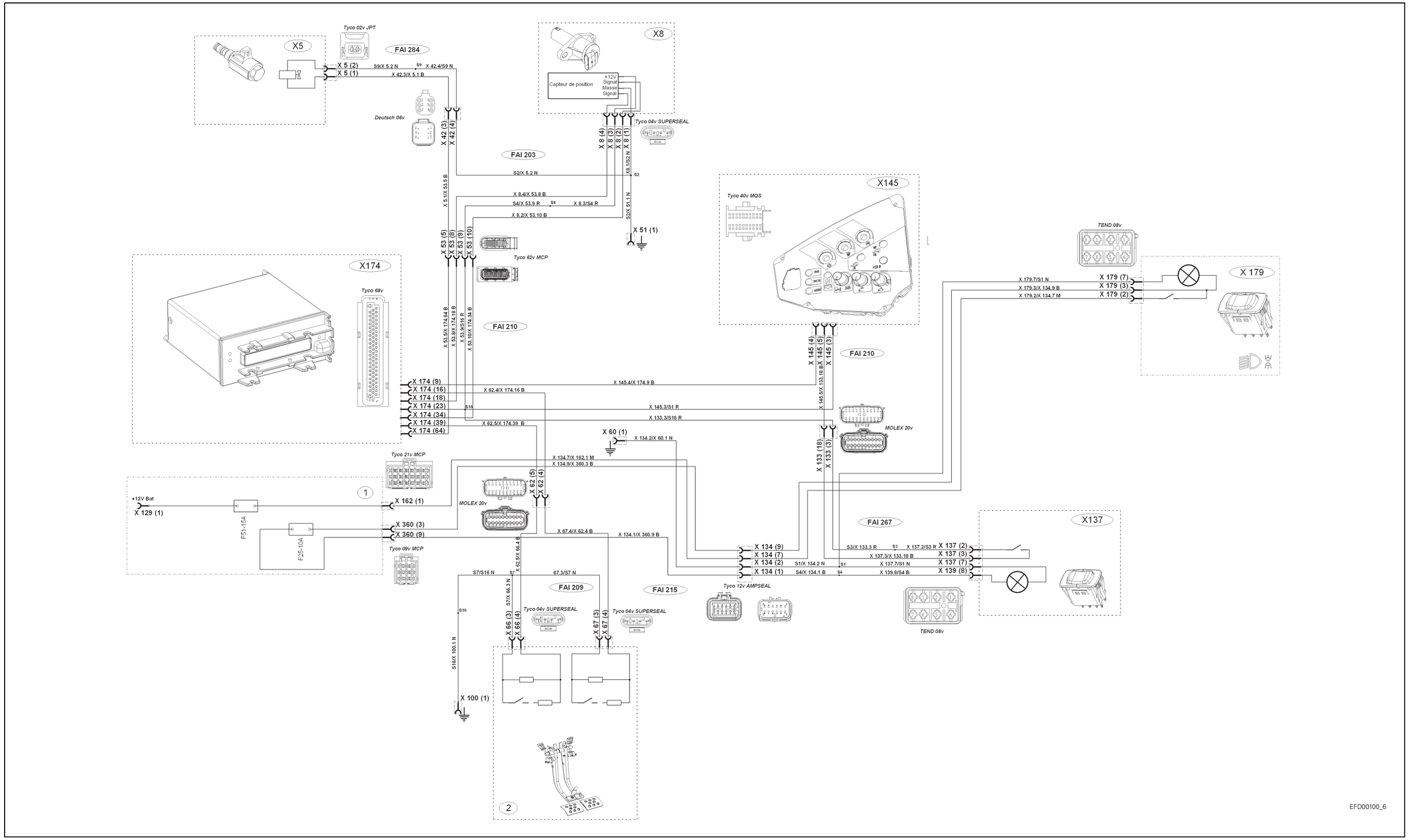

Fig. 16

8C13

4WD clutch - Layout of components

TABLE OF CONTENTS

A. Location of 4WD clutch components - diagram

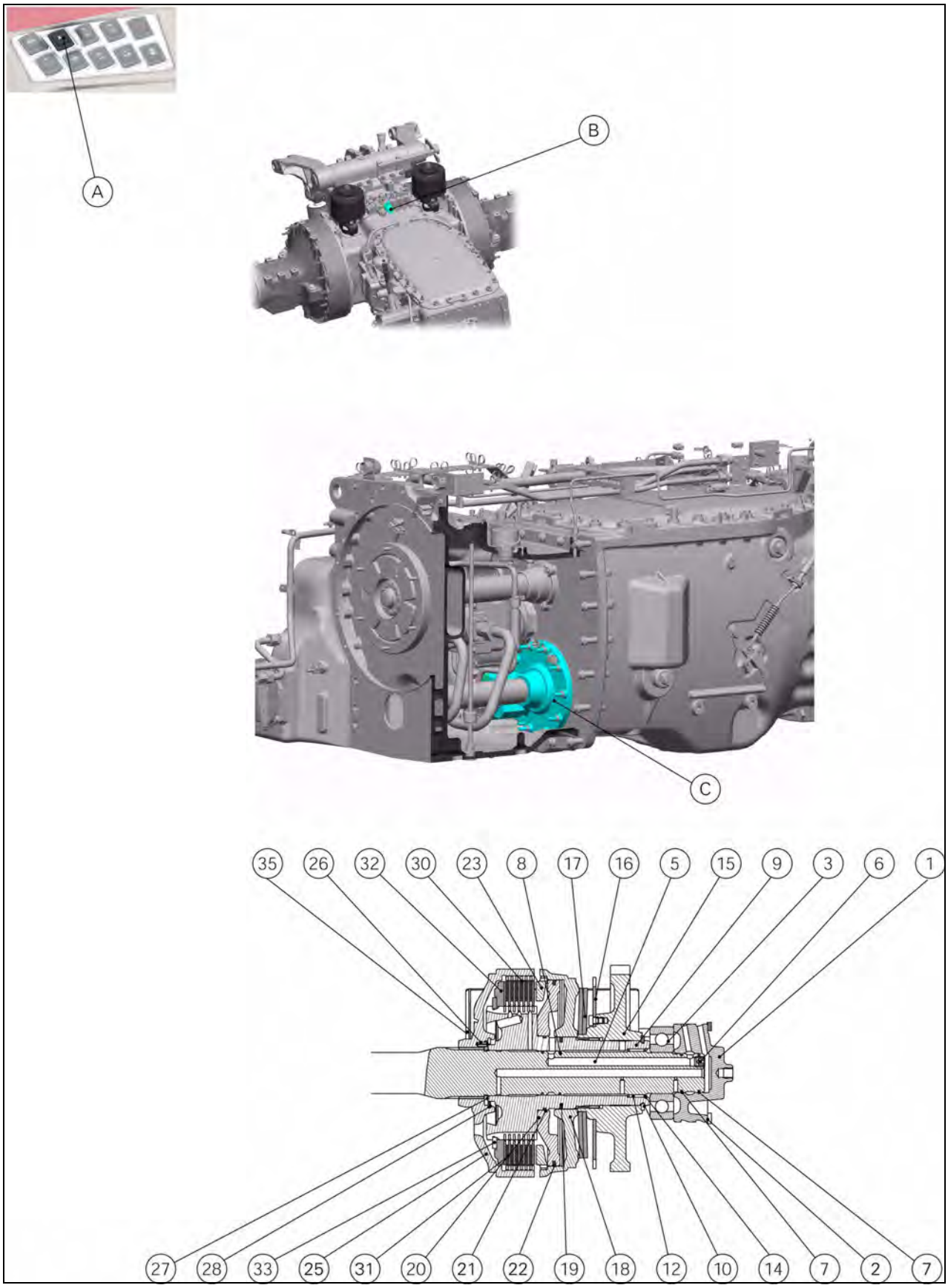

I010272

Fig. 1

B. Location of 4WD clutch components - parts list

Ref.	Description	Location
(A)	4WD clutch control switch	In the cab, right-hand side
(B)	4WD clutch solenoid valve	Underneath the cab, on the rear axle
(C)	Bearing for 4WD shaft	In front of the gearbox housing, inside the spacer
(1)	Cover plate	In the gearbox
(2)	Circlip	In the gearbox
(3)	Bearing	In the gearbox
(5)	Shaft	In the gearbox
(6)	Screw	In the gearbox
(7)	Ring with rectangular section	In the gearbox
(8)	Ring with rectangular section	In the gearbox
(9)	Disc carrier	In the gearbox
(10)	Oil retaining seal	In the gearbox
(11)	Snap ring	In the gearbox
(12)	Needle roller cage	In the gearbox
(14)	Circlip	In the gearbox
(15)	Gear	In the gearbox
(16)	Pulse gear	In the gearbox
(17)	Set of spring washers	In the gearbox
(18)	Piston	In the gearbox
(19)	Lip seal	In the gearbox
(20)	Piston washer	In the gearbox
(21)	"O" ring	In the gearbox
(22)	Lip seal	In the gearbox

Ref.	Description	Location
(23)	Thrust plate	In the gearbox
(25)	Clutch bell housing	In the gearbox
(26)	Pin	In the gearbox
(27)	Washer	In the gearbox
(28)	Circlip	In the gearbox
(30)	Outer disc	In the gearbox
(31)	Inner disc	In the gearbox
(32)	Thrust plate	In the gearbox
(33)	Circlip	In the gearbox
(35)	Protection plate	In the gearbox
(36)	Screw	In the gearbox
(37)	Washer	In the gearbox
(39)	Bearing	In the gearbox
(40)	Seal ring	In the gearbox
(41)	Bearing	In the gearbox
(42)	Washer shim	In the gearbox
(43)	Circlip	In the gearbox
(44)	"O" ring	In the gearbox

8C14

4WD clutch - Tests and diagnostics

TABLE OF CONTENTS

A. Hydraulic tests

A.1 Supply pressure measurements

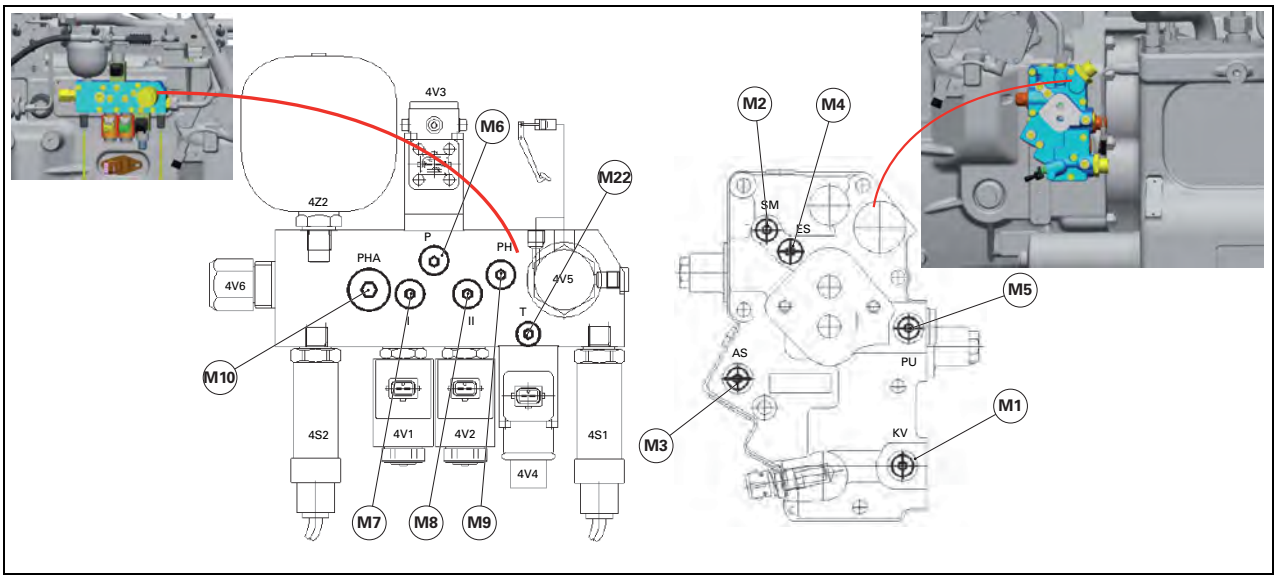

I008344

Fig. 1

Measurement points	Reference on component	Description
M1	KV	Cooler upstream pressure
M2	SM	Lubricating pressure
M3	AS	Flushing pressure
M4	ES	Fuel lift pressure
M5	PU	Service pump pressure
M6	P	Transmission system pressure
M7	I	Tortoise range engaging pressure
M8	II	Hare range engaging pressure
M9	PH	High pressure (HP)
M10	PHA	Rear axle and brake system pressure
M22	T	Oil leak on clutch function spool valve / coupler function solenoid valve

Precaution to be taken during the pressure measurements: the oil temperature must be between 35°C and 45°C.

IMPORTANT: *When measuring the transmission pressure, raise all wheels of the tractor to prevent accidents.*

42. Set transmission ratio (hare/tortoise) to speed of 0.

43. Release the hand brake.

44. Engage the front axle.

45. Differential lock and PTO clutch are not engaged.
On right-hand side, in the middle of the tractor:

46. Remove right-hand rear wheel and the protection plate.

47. Connect a pressure gauge. Measure the pressures set out below according to the different engine speeds (see settings table below)
- PU Pressure (M5). Pressure measuring point located between the service pump and the pressure filter.
- P Pressure (M6). System pressure downstream of pressure filter.
- ES charge pressure.
- AS flushing or discharge pressure.
- SM transmission lubricating pressure.

Set values for pressure measurement

Engine speeds	PU (M5)	P (M6)	ES (M4)	AS (M3)	SM (M2)
800	25 bar ± 2 bar	25 bar ± 2 bar	16 bar ± 2 bar	9 bar ± 2 bar	2 bar ± 0.4 bar
1200	26 bar ± 2 bar	25.5 bar ± 2 bar	19 bar ± 2 bar	11 bar ± 2 bar	3 bar ± 0.5 bar
1600	27 bar ± 2 bar	26 bar ± 2 bar	21 bar ± 2 bar	13 bar ± 2 bar	4.2 bar ± 0.6 bar
2000	28 bar ± 2 bar	27 bar ± 2 bar	24.5 bar ± 3 bar	16 bar ± 2.5 bar	5.5 bar ± 0.8 bar

A.2 High pressure (HP) measurements

DANGER: High pressure measurements must never exceed a maximum of 5 seconds, to prevent the oil from heating.

Preliminary steps
Engage hare range and set the starting speed to maximum, or transmission to limp home mode (do not turn the control unit by more than 15° in order to avoid heating the oil).

Measurement points	Engine speed	Specified value:
PH (M9)	1600	540 bar + 20 bar

NOTE: *Load the hydrostatic loop for a maximum of 5 seconds before taking the following measurements.*

Measurement points	Engine speed	Specified value
P (M6)	1600	26 bar ± 2 bar
ES (M4)	1600	22 bar ± 2 bar
AS (M3)	1600	15 bar ± 2 bar
SM (M2)	1600	3.5 bar ± 0.4 bar

NOTE: *If the high pressure PH is not reached, but the AS and ES pressures are correct, check the clutch pressure relief valves 4V4 and 4V5.*

A.3 Shifting pressure measurements

Measurement points	Engine speed	Specified value:
In Hare or Tortoise range (M7/M8)	1600	26 bar ± 2 bar

NOTE: *Alternately supply solenoid valves 1 (4V1) and 2 (4V2) with a 12 V (DC) supply*

A.4 Rear PTO, differential lock and front axle clutch solenoid valve measurement

NOTE: *The unit is located on the rear axle housing, behind the spool valves. Access is limited, so great care must be taken.*

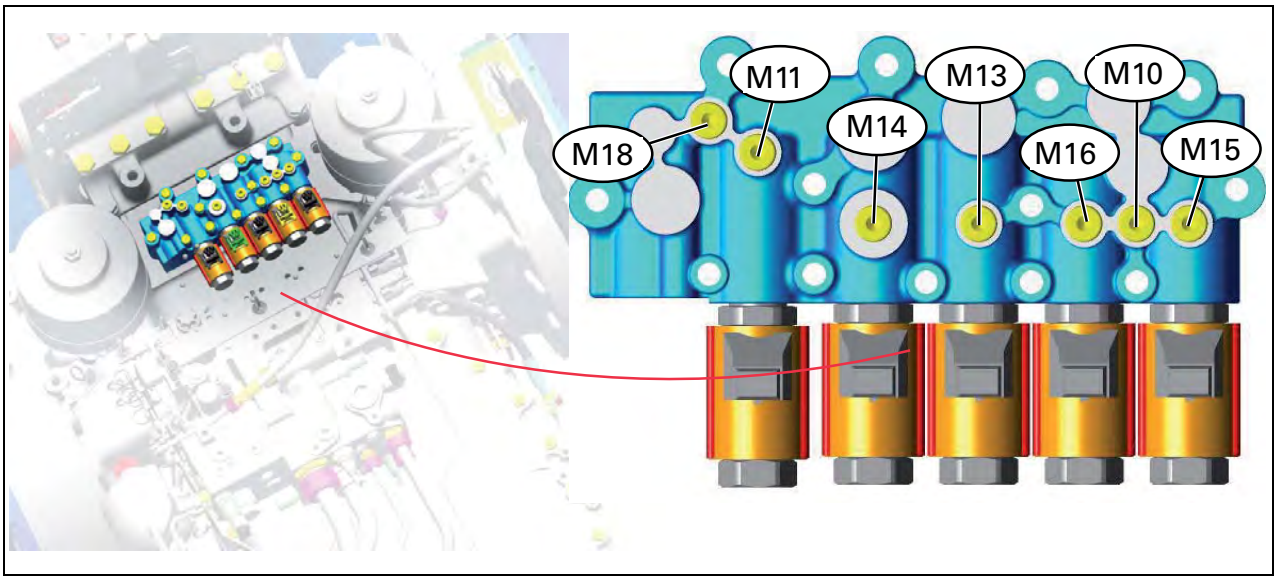

I008345

Fig. 2

M10 Rear axle, brakes and front PTO system pressure
M11 Rear PTO clutch
M13 750 rpm PTO selector pressure
M14 Front axle clutch (4WD)
M15 Differential lock
M16 1000 rpm PTO selector pressure
M18 Rear axle lubricating pressure

The pressure connectors can be accessed from the rear of the tractor.

NOTE: *Run the engine at 1200 rpm. Simultaneously check the pressure at unions M10 and M18 (SM).*

Switching status of components that consume electricity	Measurement points	M10 system pressure	M18 lubricating pressure
Power take-off - On / Off	M11	18 bar ± 0.2 bar	2 bar ± 0.3 bar
Differential lock - On/Off	M15	18 bar ± 0.2 bar	2 bar ± 0.3 bar
Front axle (4WD) - On / Off	M14	18 bar ± 0.2 bar	2.1 bar ± 0.3 bar
Activation of locked brake pedal		18 bar ± 0.2 bar	1.2 bar ± 0.3 bar

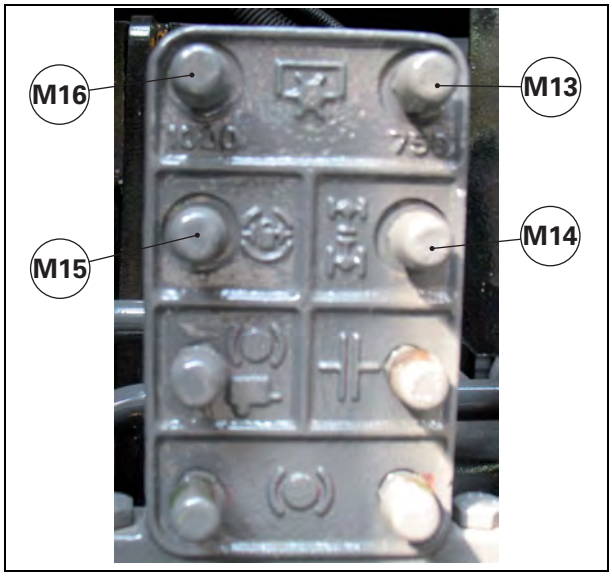

I008346

Fig. 3

(1) Rear PTO clutch (M12 - 1.5 union)
(2) Rear axle lubricating pressure (M10 - 1 union)
(3 - 4) 750 or 540 speed selection (M10 - 1 union)

In order to check the rear PTO, it is also possible to measure pressure levels at the unions located at the rear right and left-hand sides of the rear axle housing.

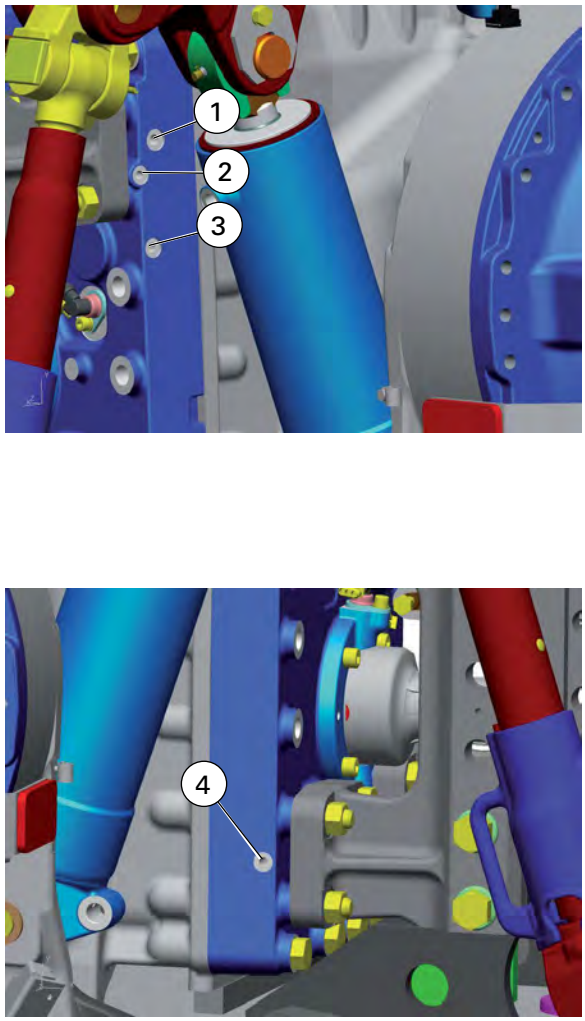

I008347

Fig. 4

Diagram showing the pressure connectors on the valve block

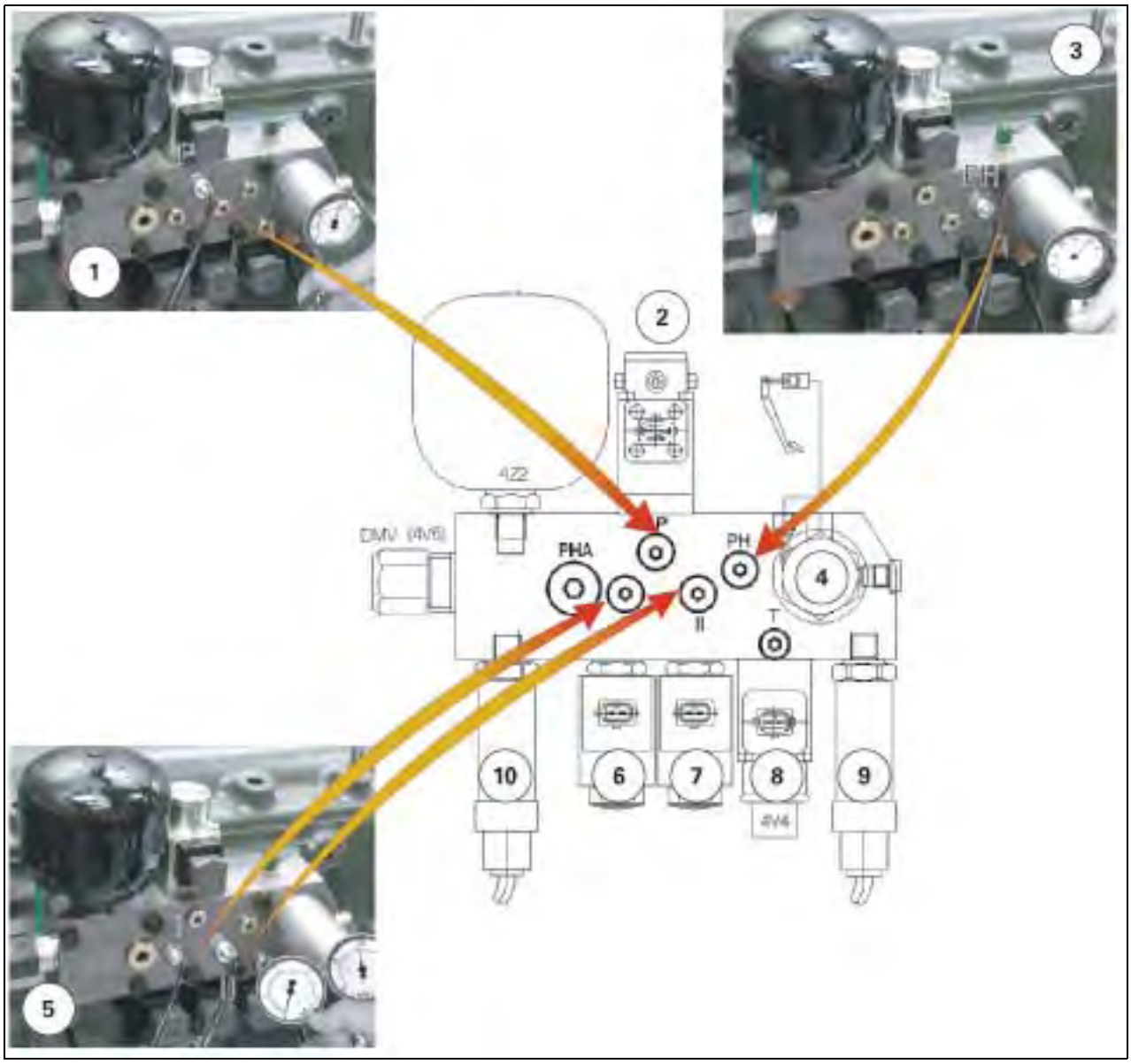

I008349

Fig. 5

(1) Service pump check
(2) Speed limiting solenoid valve
(3) PH pressure check
(4) Clutch function controlled valve
(5) Supply pressure for Hare/Tortoise range check
(6) Tortoise range solenoid valve
(7) Hare range solenoid valve
(8) Coupler function solenoid valve
(9) HP Pressure sensor
(10) HP Pressure sensor

Valve block with test connections

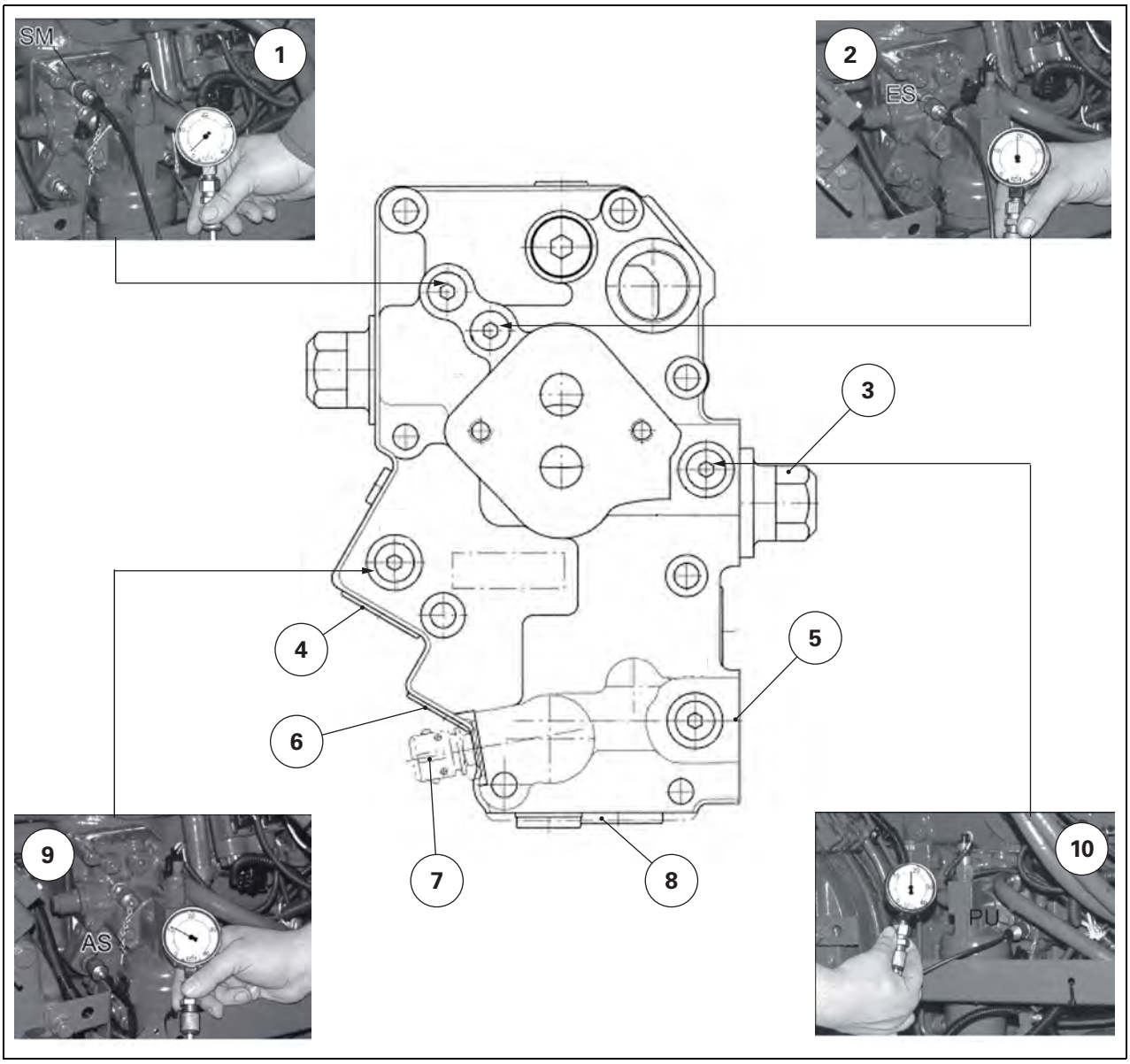

I008350

Fig. 6

(1) Lubricating pressure check (SM)
(2) Charge pressure check (ES)
(3) Service pump relief valve (50 b)
(4) Charge valve (6.5 b)
(5) Cooler bypass valve
(6) Flushing valve (6 b)
(7) Temperature sensor
(8) Lubricating pressure valve (6.5 b)
(9) Flushing pressure check (AS)
(10) Service pressure check (PU)

A.5 Checking the hydrostatic loop in the control unit

DANGER: Chock the tractor (HP pressure measurement).

1. Remove the right-hand rear wheel and the protection plate located behind it.
2. Remove the T union.
3. Fit a pressure gauge to measure pressures higher than 540 bar at the PH union.

Checking procedure:

4. Start the engine.

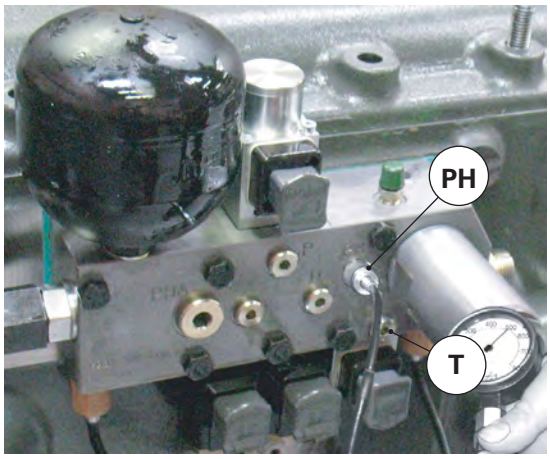

I008341 Fig. 7

5. Activate limp home mode by pressing in the clutch pedal fully and pressing the button.
6. Apply the hand brake.

I008342 Fig. 8

7. Use the limp home mode lever to start the transmission.

PH	T union	Possible causes
250 bar	No oil flow to the T union	Transmission module error (shuttle valve, pressure pipe union). =>Remove the module.
250 bar	Oil flows from the T union	Coupler function valve (4V4) or clutch function valve (4V5) not tightly sealed. => Change the valve.

Checking the coupler function valve (4V4)

8. Mechanically lock the valve.

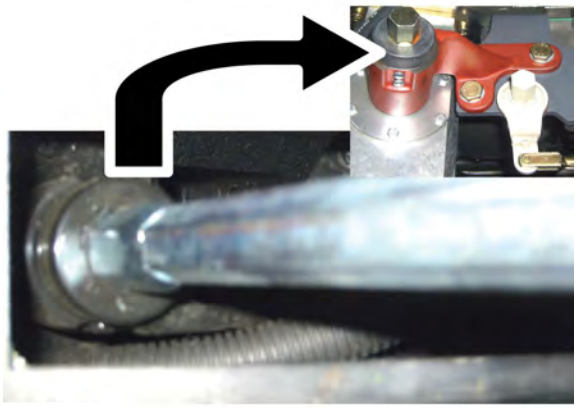

I008343 Fig. 9

PH	T union	Possible causes
250 bar	Oil flows from the T union	Clutch function valve (4V5) not tightly sealed => Change the valve.
540 bar	Oil flows from the T union, but the pressure is not constant	Electrically check the coupler function valve > Change the valve if faulty

8C15

Section intentionally left blank

8C16

4WD clutch - Adjustments, bleeding and calibrations

TABLE OF CONTENTS

A. Autotronic 4 - Hare/Tortoise range - Transmission - Coupler function - Power take-off

Calibration of the following Autotronic 4 functions is necessary for optimum performance:
- Hare/Tortoise range
- transmission
- coupler function

Calibration of the power take-off is also possible with special tools if there is a problem when starting.

Input at level 1 - CAL 1

IMPORTANT: *In order to carry out a calibration, any error codes must be corrected.*
If an error code is active: the calibration returns an error immediately.
To select CAL1:

1. Start the engine.

2. Engage and release the clutch pedal in order to delete the "TC" "DC" display from the screen on the right-hand side of the instrument panel

3. Within the next 5 seconds, simultaneously press keys on the Dash Control Center keypad.

4. The screen (Fig. 9) appears, displaying the 4 symbols of the functions to be calibrated:

Hare/Tortoise range

Transmission

Coupler function

Power take-off

The selected function is displayed in reverse video.

5. Before starting calibration, ensure that the tractor is in a suitable condition.

6. Select the function to be calibrated using keys on the Dash Control Center keypad and then press "OK".

NOTE: *This procedure must be repeated for each calibration.*

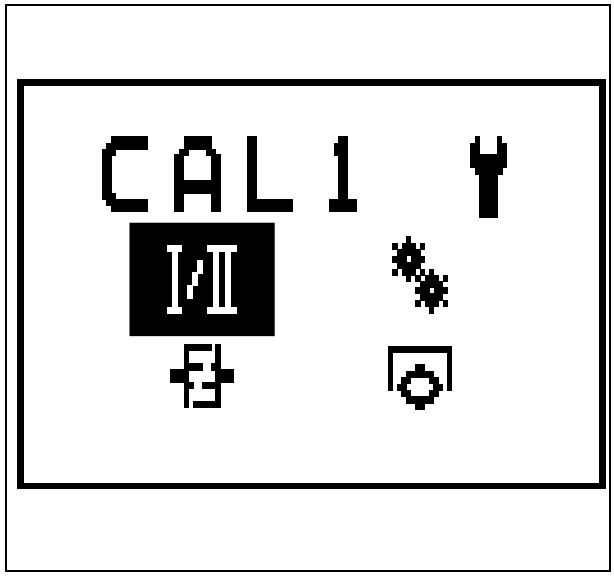

I007464 Fig. 1

Hare/Tortoise range

Calibration procedure

This calibration must be carried out systematically after changing any of the following:
- Hare range solenoid valve
- Tortoise range solenoid valve
- Range position sensor
- Autotronic 4

Preliminary conditions

1. Hand brake or ParkLock disengaged.

2. Power Control lever in neutral position.

3. Clutch pedal pressed down.

4. Engine speed less than 1000 rpm.

Calibration

5. Having selected I/II in the CAL1 screen (Fig. 9), press "OK" to start calibration.

6. The calibration lasts for approximately 6 minutes and takes place in 3 steps, shown one after the other on the screen (Fig. 10):
- Step 0: Tortoise range
- Step 1: Hare range
- Step 2: Neutral (intermediate position)

7. The calibration result is displayed:
- "OK": successful calibration (since the calibration procedure is ended by placing the transmission in neutral, the Hare/Tortoise symbols flash alternately on the right-hand screen)
- "ERROR": calibration failed (repair the fault before resuming the procedure)

8. ***IMPORTANT:*** *Switch off the ignition for at least 30 seconds in order to validate the calibration.*

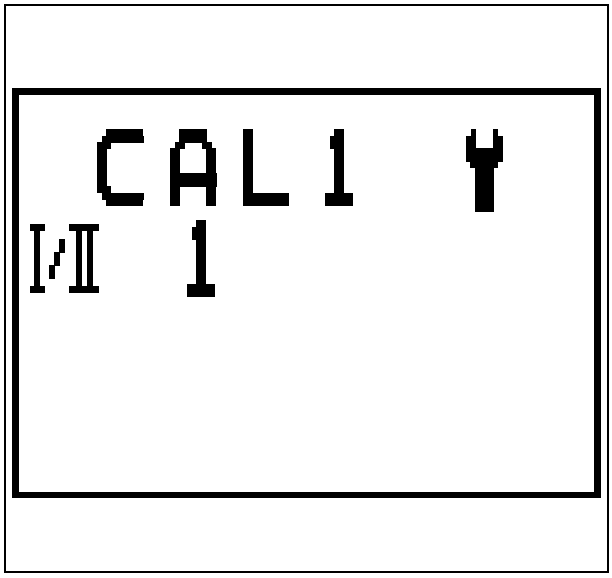

I007465 Fig. 2

Transmission

Calibration procedure

This calibration must be carried out systematically after changing any of the following:
- transmission control module
- transmission
- transmission high pressure sensor
- Autotronic 4

Preliminary conditions

Calibration must be carried out just after the range has been calibrated:

1. Hand brake applied or ParkLock engaged.

2. Power Control lever in neutral position.

3. Hare/Tortoise range in neutral (Hare/Tortoise symbols flash alternately on the right-hand screen).

The Hare/Tortoise range should be in neutral because calibration of the range has been carried out in the previous step.

Calibration

4. Having selected in the CAL1 screen (Fig. 9), press "OK" to start calibration.
5. Engine speed automatically adjusts to 1600 rpm.
6. Hare/Tortoise symbols continue to flash alternately.
7. The calibration lasts for approximately 6 seconds and takes place in 7 steps, shown one after the other on the screen (Fig. 11).
   These 7 steps allow calibration of the hydraulic motors and pumps.

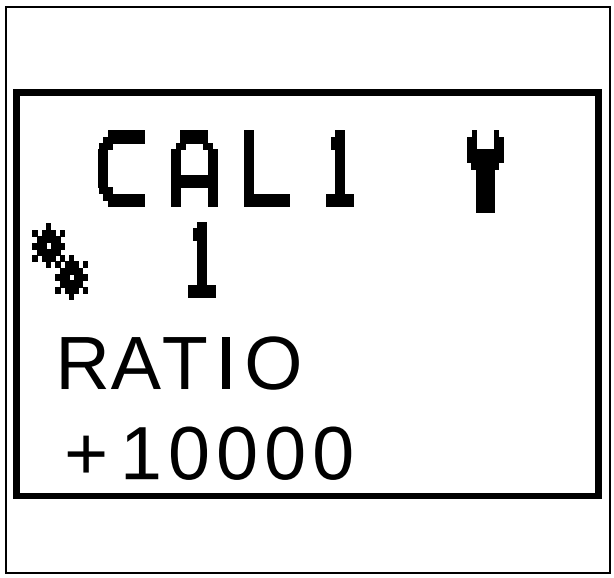

I007466 Fig. 3

8. The calibration result is displayed:
   - "OK": successful calibration (Fig. 12)
   - "ERROR": calibration failed (repair the fault before resuming the procedure)
9. ***IMPORTANT:*** *Switch off the ignition for at least 30 seconds in order to validate the calibration.*

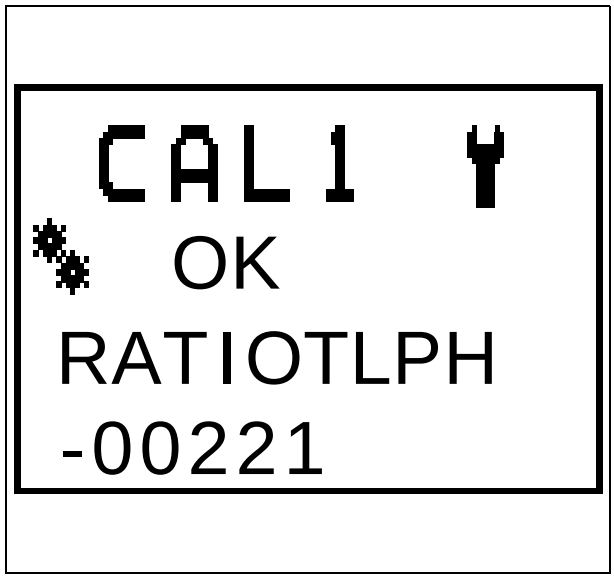

I007467 Fig. 4

Coupler function

Calibration procedure

This calibration must be carried out systematically after changing any of the following:
- coupler function solenoid valve
- transmission oil high pressure sensor
- Autotronic 4

Preliminary conditions

1. Transmission temperature higher than or equal to 40°C (recommendation: do not cancel calibration if the value is too low).

   There are 2 ways to view the transmission temperature:
   - The value can be viewed on the gearbox screen of the diagnostic tool.
   - Use the instrument panel DIAG mode via the Dash Control Center:

- Press the top arrow for 3 seconds.
- Select DATA (in reverse video) then press "OK".
- The value is indicated by the "Trans Temp" line.

2. Hand brake applied or ParkLock engaged.

3. Power Control lever in neutral position.

4. Hare range engaged.

Calibration

5. Having selected in the CAL1 screen (Fig. 9), press "OK" to start calibration.

6. Engine speed automatically adjusts to 1100 rpm.

7. The calibration lasts for approximately 2 minutes and takes place in 9 steps, shown one after the other on the screen (Fig. 13).
These 9 steps allow calibration of the solenoid valve current.

8. The calibration result is displayed:
- "OK": successful calibration
- "ERROR": calibration failed (repair the fault before resuming the procedure)

9. ***IMPORTANT:*** *Switch off the ignition for at least 30 seconds in order to validate the calibration.*

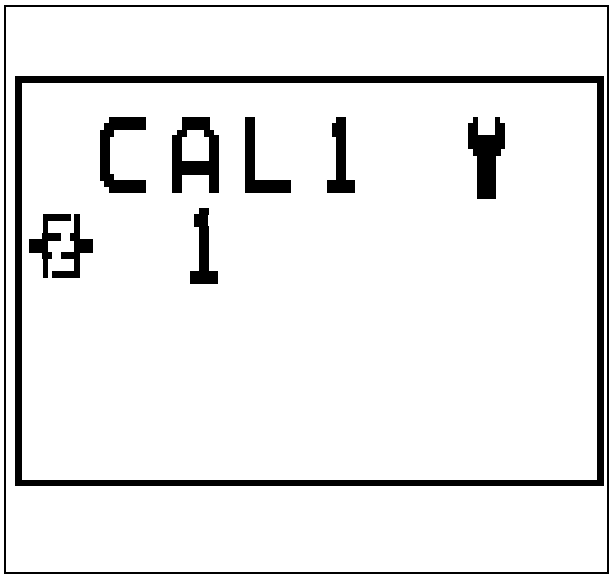

I007468 Fig. 5

Power take-off

Calibration procedure

- This calibration must be performed only in the event of a starting problem with a high-inertia implement
- when changing the PTO solenoid valve
- when changing the Autotronic 4

Preliminary conditions

1. Hand brake applied or ParkLock engaged.

2. Power Control lever in neutral position.

3. Select a PTO speed (540, 540ECO or 1000 rpm) depending on the implement.

Calibration

4. Having selected in the CAL1 screen (Fig. 9), press "OK" to start calibration.

5. Engage the PTO.

6. Calibration takes place automatically, and the time taken depends on the implement (Fig. 14).

7. The calibration result is displayed:
- "OK": successful calibration
- "ERROR": calibration failed

8. ***IMPORTANT:*** *Switch off the ignition for at least 30 seconds in order to validate the calibration.*

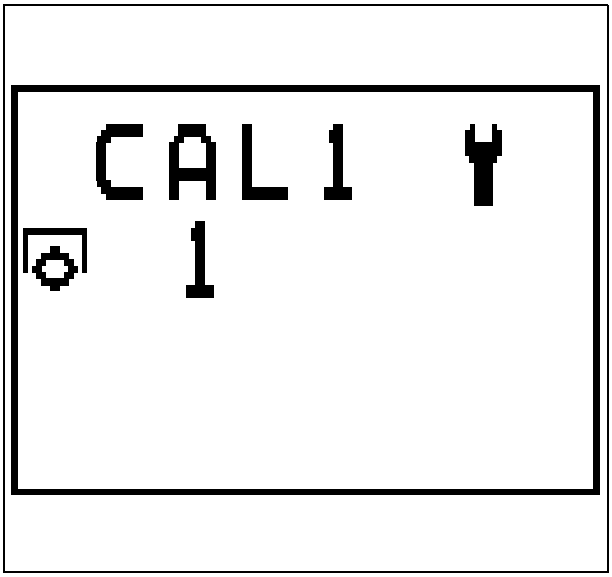

I007469

Fig. 6

8C17

4WD clutch - Disassembly and reassembly

TABLE OF CONTENTS

A. Disassembling the 4WD clutch

Steps required before disassembly

1. Drain the transmission oil (approx. 65 l).
2. Remove the 4WD transmission shaft.
3. Remove any hydraulic pipes that could hinder the operation.
4. Remove the transmission unit.

   NOTE: *For easier reading, the work is carried out on a scale model.*

5. Separate the spacer and gearbox.
6. Remove the M8 screw and the retaining washer.

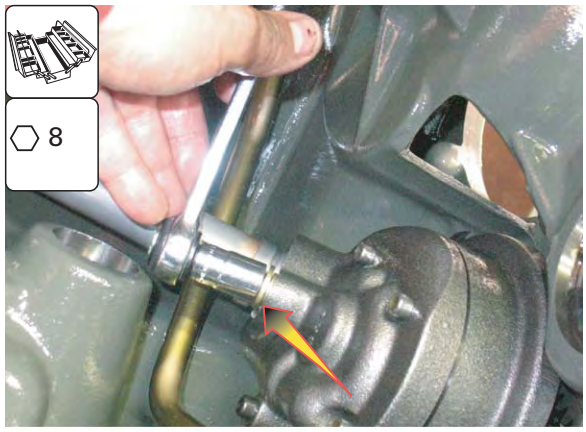

I008511 Fig. 1

7. Remove the circlip from the suction pipe filter housing side.

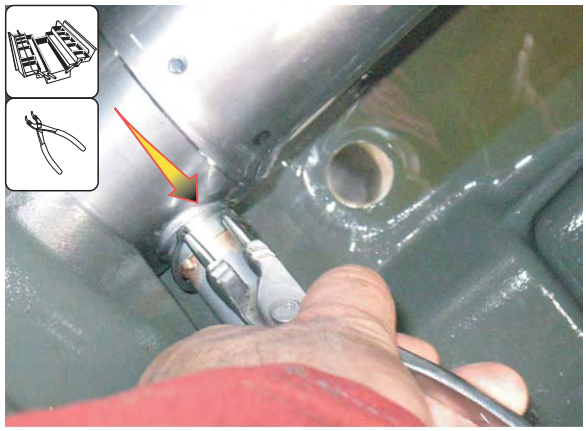

I008512 Fig. 2

8. Remove the suction pipe by sliding it towards the front.

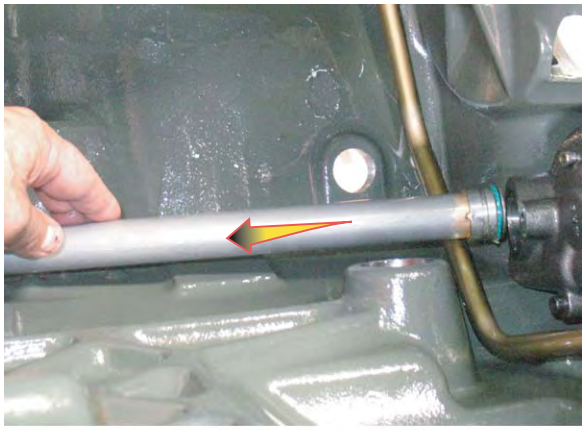

I008513 Fig. 3

9. Remove the three screws from the filter closing plate.

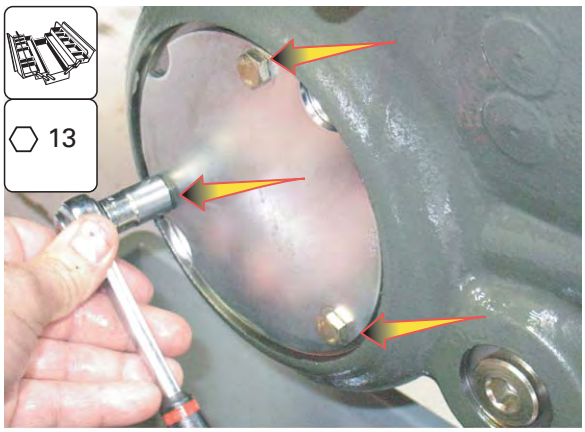

I008514 Fig. 4

10. Remove the filter and filter carrier assembly.

NOTE: *Ensure you have an oil drip pan.*

I008515 Fig. 5

11. Remove the two screws from the pinion sensor

12. Remove the pinion sensor.

I008516 Fig. 6

13. Remove the two attachment screws from the pump.

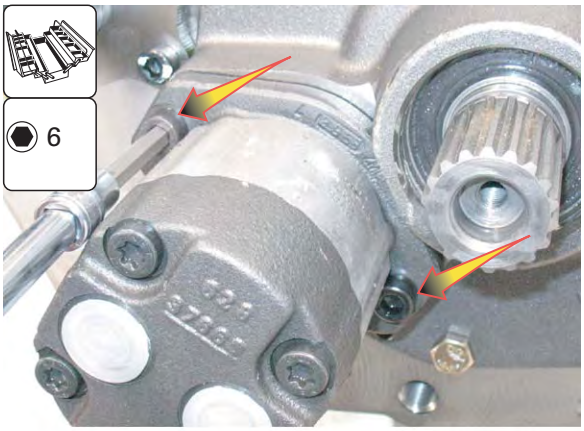

I008517 Fig. 7

14. Remove the pump.

NOTE: *Ensure you have an oil drip pan.*

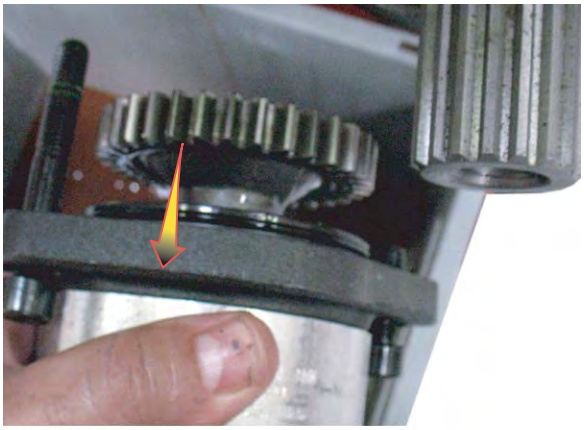

I008518 Fig. 8

15. Remove the attachment screws from the 4WD shaft bearing.

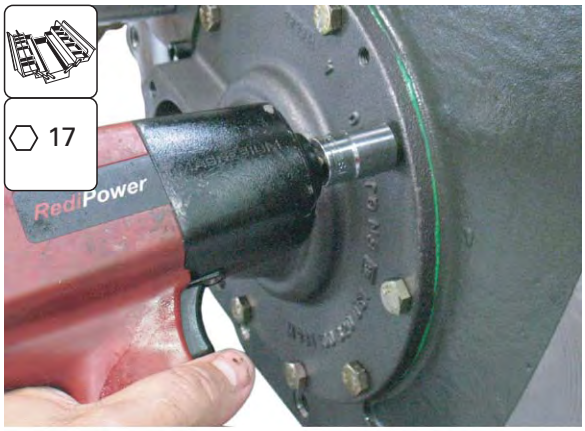

I008519 Fig. 9

16. Leave two screws loosened without removing them.

17. Tighten two other screws in the tapped holes provided to release the cover plate.

18. Remove the cover plate.

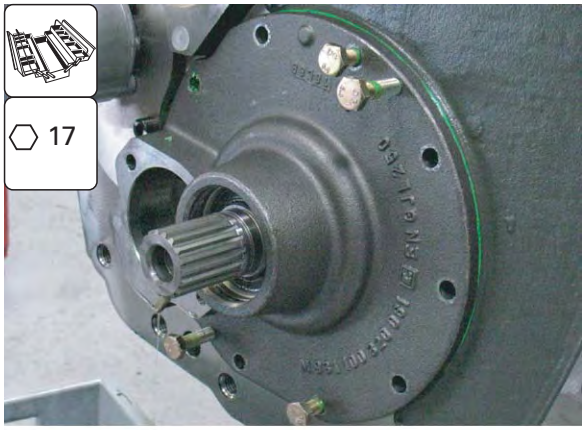

I008520 Fig. 10

19. Mark the position of the shim and remove it.

I008521 Fig. 11

20. Remove the retainer circlip.

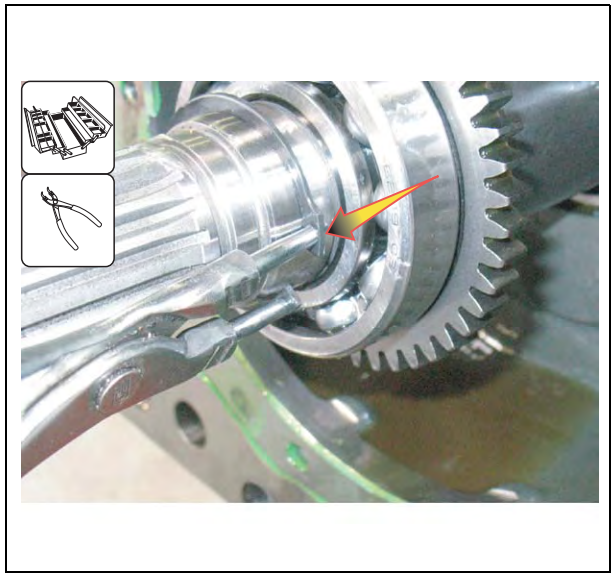

I008522 Fig. 12

21. Using a slide hammer puller, take the shaft out of its housing.

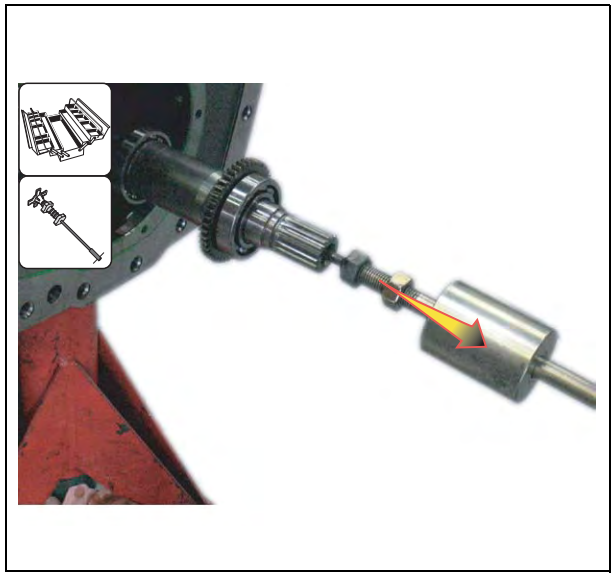

I008523 Fig. 13

22. Remove the hydraulic pipe.

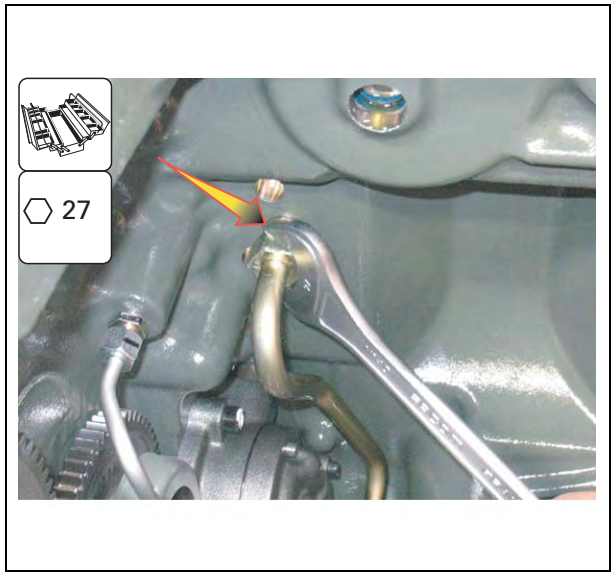

I008524 Fig. 14

23. Remove the attachment screw from the 4WD clutch guard.

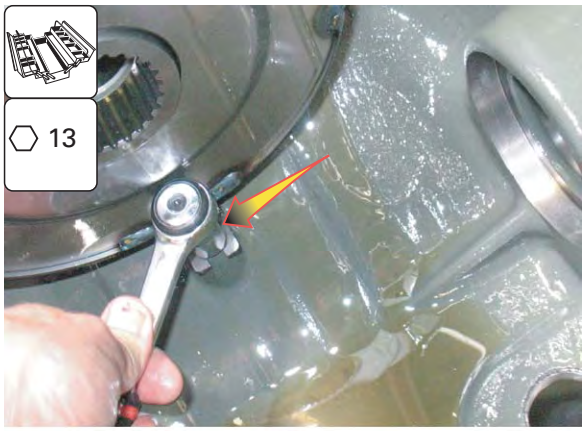

I008525 Fig. 15

24. Remove the guard.

I008526 Fig. 16

25. Remove the 4WD clutch.

CAUTION: Do not let the clutch fall to the bottom of the housing as this may cause injury.

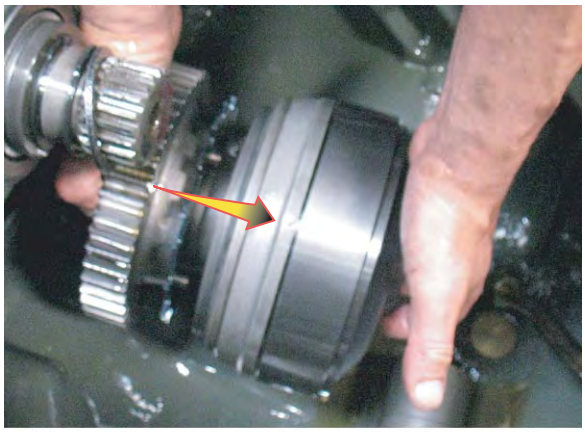

I008527 Fig. 17

B. Reassembling the 4WD clutch

CAUTION: Before reassembly, all components, mating faces and grooves must be clean. Any rust, mud or water must be removed.

1. Fit a new or overhauled 4WD clutch.

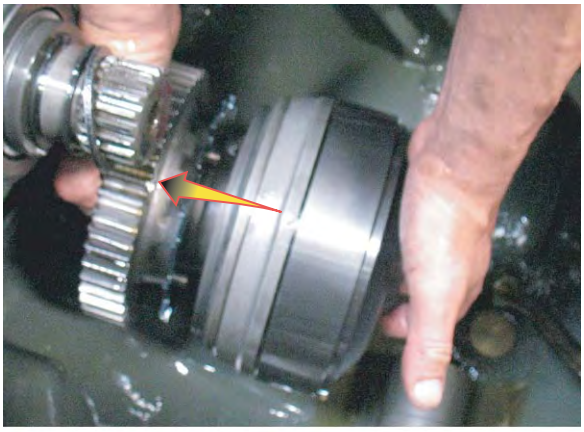

I008530 Fig. 18

2. Fit the guard and its attachment screw.

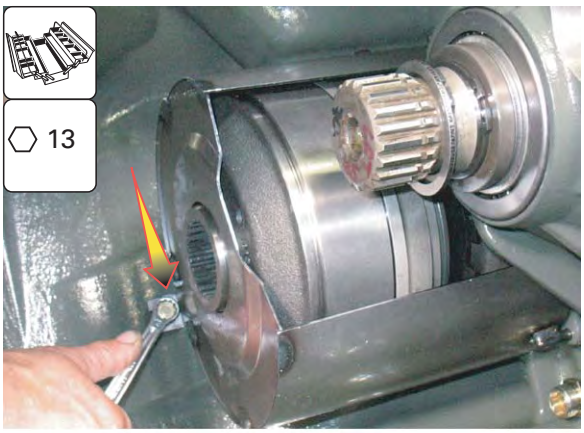

I008531 Fig. 19

3. Fit the filter and filter carrier assembly.

I008532 Fig. 20

4. Check that the rectangular rings are not faulty and smear them with miscible grease.

5. Offset the openings in relation to one another.

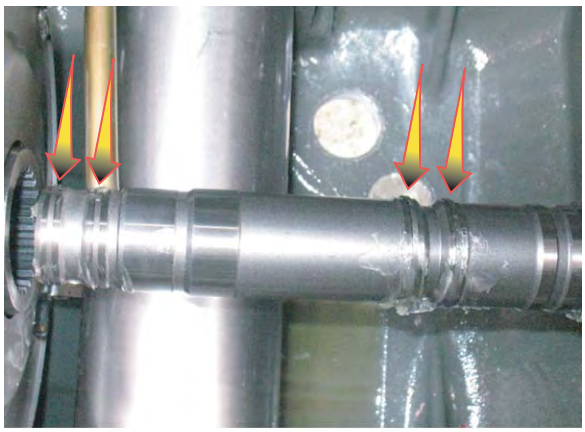

I008533 Fig. 21

6. Fit the shaft into the clutch.

NOTE: *It may be necessary to raise the clutch using a wooden block to install the shaft.*

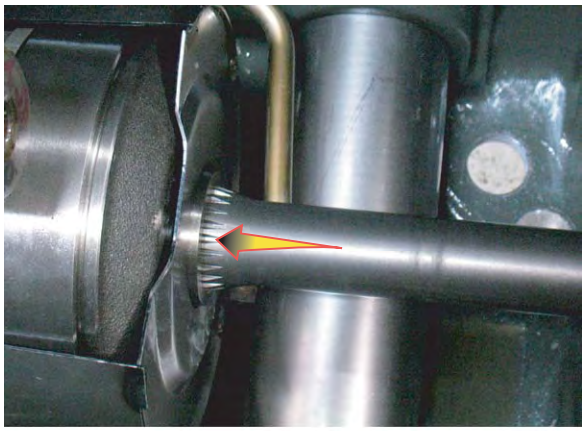

I008534 Fig. 22

7. Smear the cover plate with sealant (ref. X903.050.074).

8. Fit the shim, sticking it in place with miscible grease.

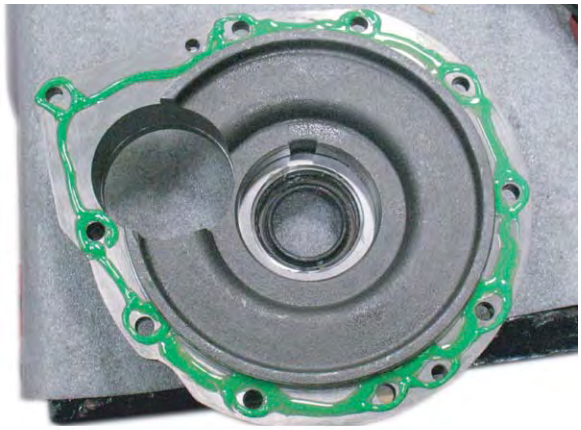

I008535 Fig. 23

9. Fit the cover plate and hold it in place with four screws.

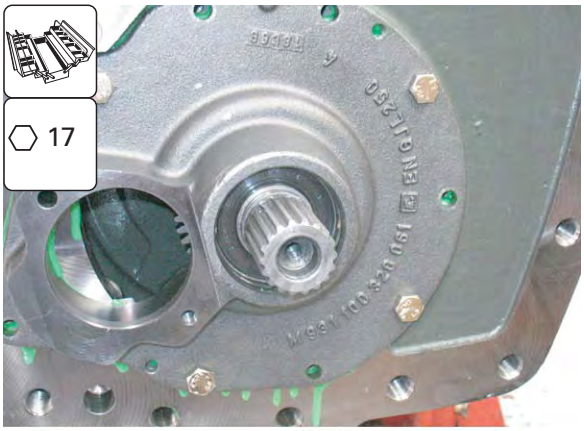

I008536 Fig. 24

10. Alternately tighten all attachment screws on the cover plate to a torque of:

11. Check the axial clearance of the universal joint shaft with a dial gauge.
Specified value: 0.3 mm + 0.1 mm

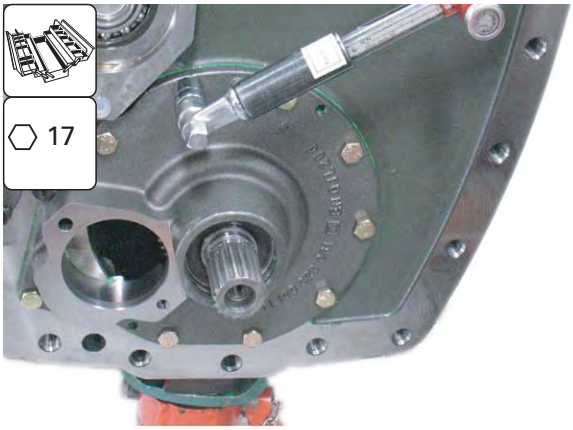

I008538 Fig. 25

12. Refit the hydraulic pump.

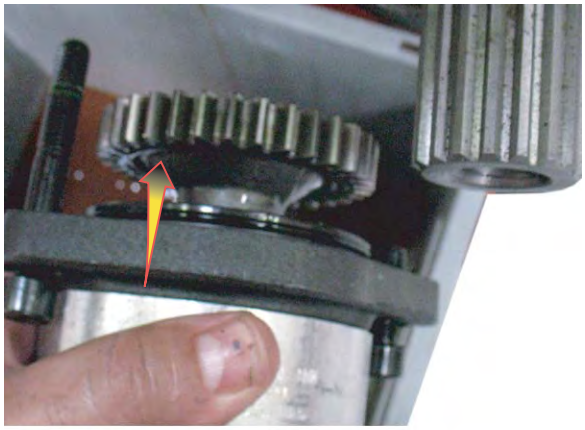

I008539 Fig. 26

13. Tighten the pump screws to a torque of:

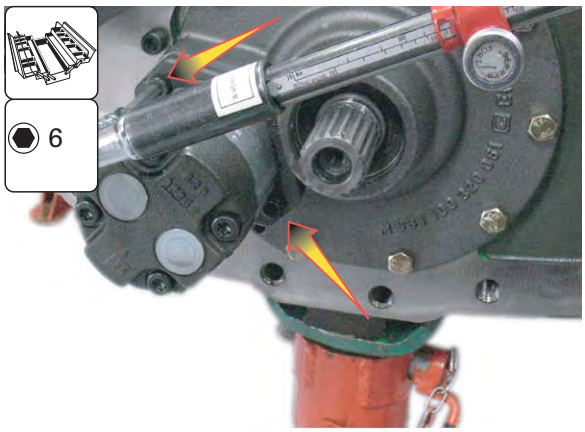

I008541 Fig. 27

14. Fit the "O" ring in its groove on the pump side of the pipe.

15. Fit the circlip and "O" ring on the small diameter of the pipe on the filter side.

16. Position the pipe.

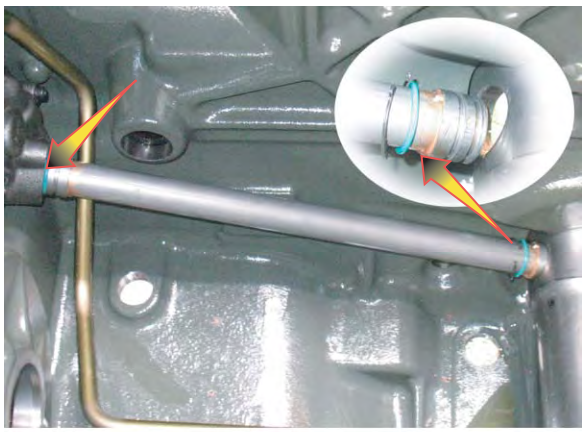

I008542 Fig. 28

17. Insert the pump side of the pipe.

18. Slide the "O" ring for the filter side into its groove.

NOTE: *Do not twist the "O" ring.*

19. Fit the circlip in its groove.

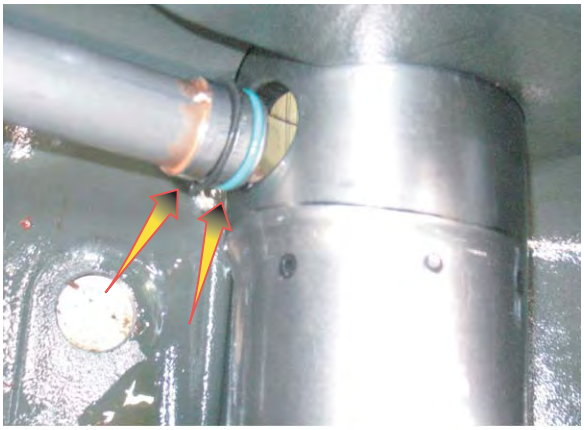

I008543 Fig. 29

20. Slide the filter side of the pipe up against the circlip.

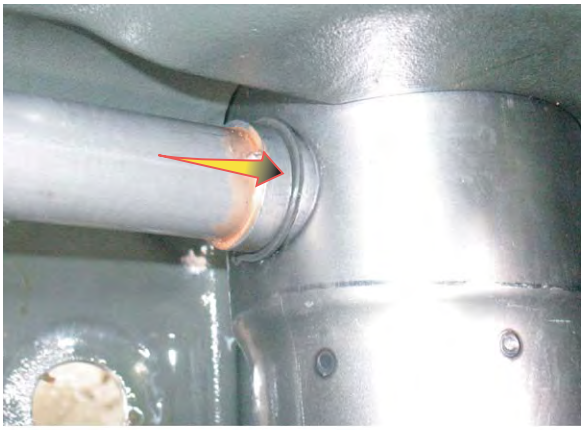

I008544 Fig. 30

21. Fit and tighten the retaining screw and its washer.

22. Repeat the steps required before disassembly in the reverse order.

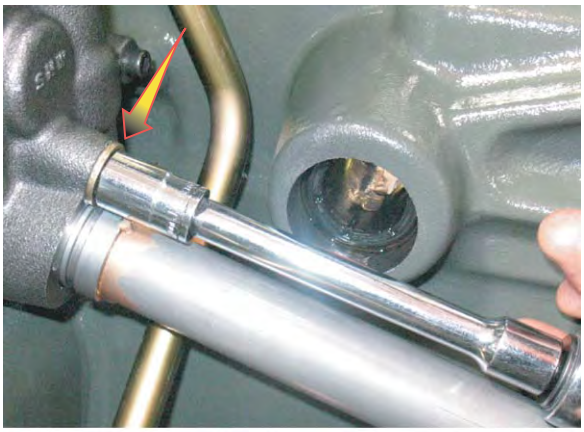

I008545 Fig. 31

C. Repairing the 4WD clutch

Disassembly

1. Fit a stirrup (locally made). Using a press, compress the spring washer set assembly (17) until the circlip (2) is released.

I008570 Fig. 32

2. Remove the circlip (2) and carefully release the load exerted by the press.

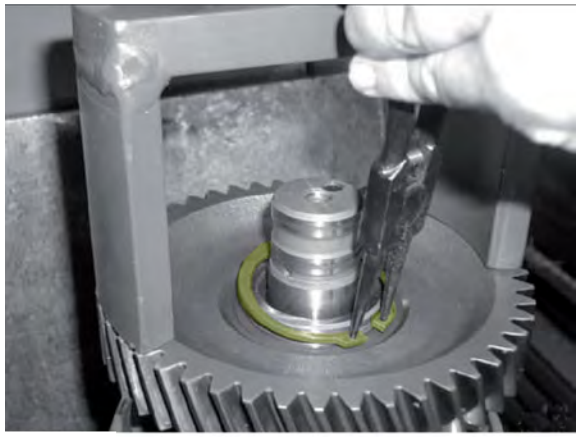

I008571 Fig. 33

3. Extract the gear (15).

I008572 Fig. 34

4. Remove the set of spring washers (17).

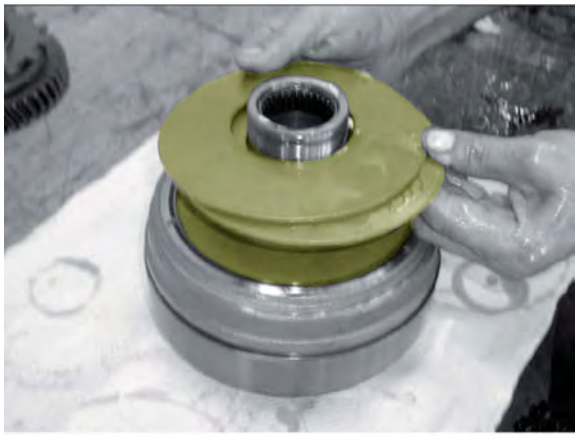

I008573 Fig. 35

5. Take out the piston (18), the piston washer (20) and the thrust plate (23).

I008574 Fig. 36

6. Remove the set of discs (30-31), the thrust plate (32) and the disc carrier (9).

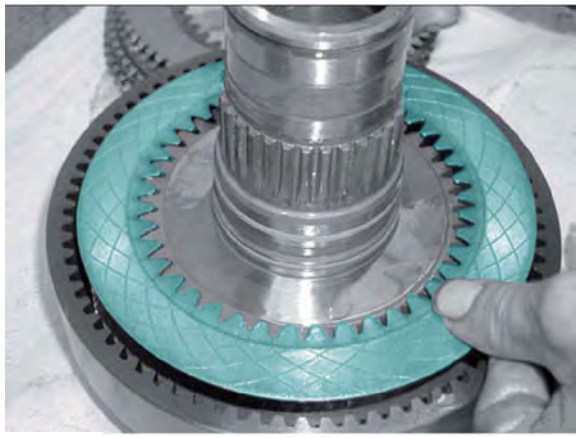

I008575 Fig. 37

7. Discard the "O" ring (29) and the lip seal (19).

Reassembly

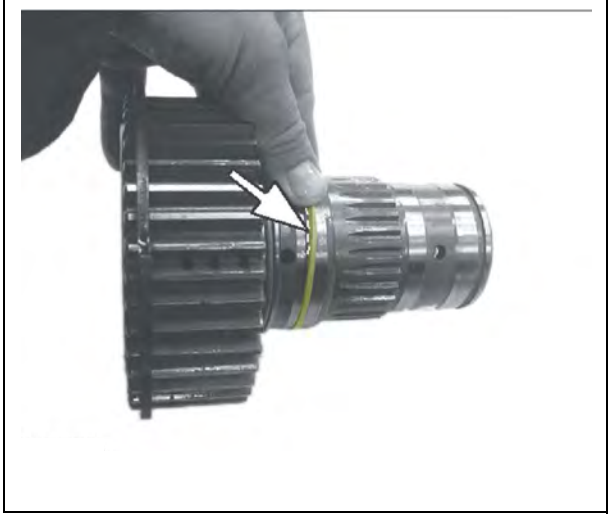

I008576 Fig. 38

8. Fit the disc carrier (9) with a new "O" ring (21) and a new lip seal (19).

NOTE: *Grease the "O" ring (21) and lip seal (19). The lip seal groove is directed to the oil chamber (arrow).*

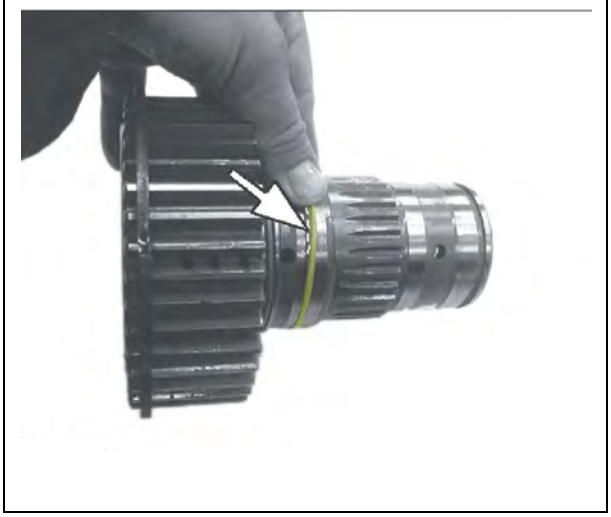

I008576 Fig. 39

9. Fit the disc carrier (9) in the clutch bell housing (25). Fit the thrust plate (32). The groove should face the clutch bell housing (25) (arrow).

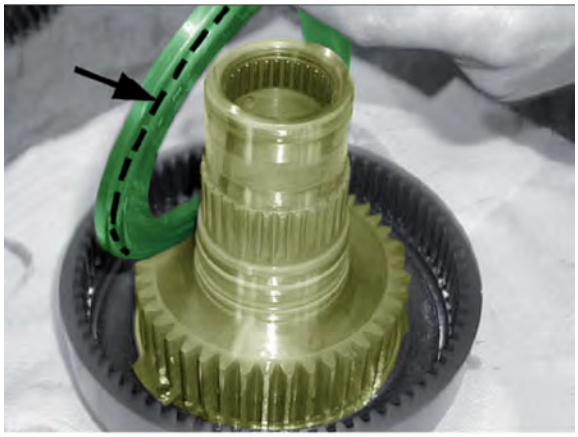

I008577 Fig. 40

10. Starting with an internal disc (31), assemble the set of discs.

11. Oil the internal discs.

12. Fit the internal discs (31) and external discs (30) alternately.

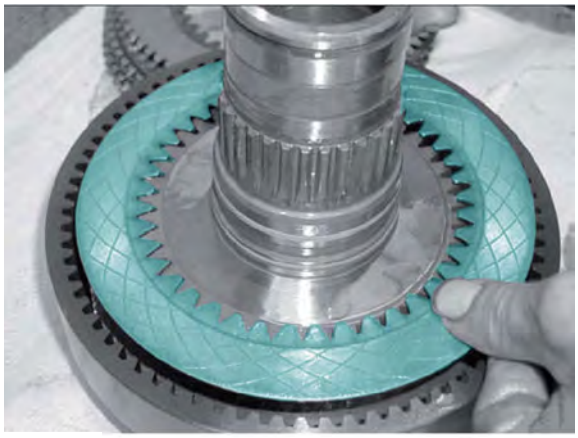

I008575 Fig. 41

13. Fit the thrust plate (23). The groove (arrow) should face the internal disc (30).

I008578 Fig. 42

14. Fit a new lip seal (22) on the piston washer (20).

NOTE: *Grease the lip seal (22). The lip seal groove should be turned towards the oil chamber (arrow).*

I008579 Fig. 43

15. Fit the piston washer (20) in the piston (18). Position it correctly (arrow).

I008580 Fig. 44

16. Fit the piston (18) fitted with the washer (20).

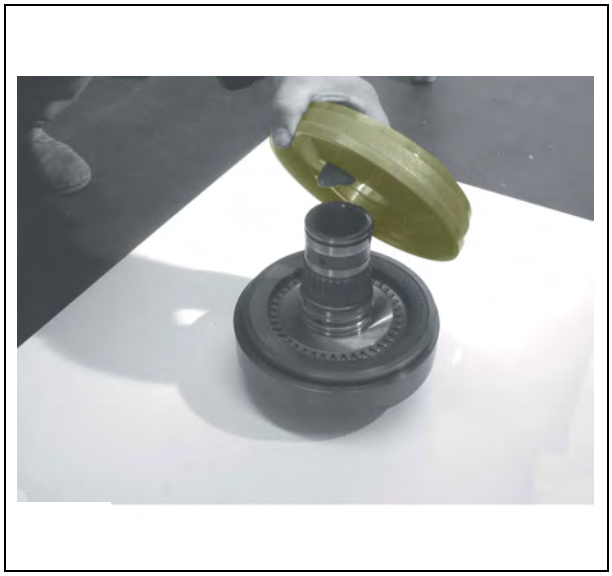

I008581 Fig. 45

17. Fit the set of spring washers.

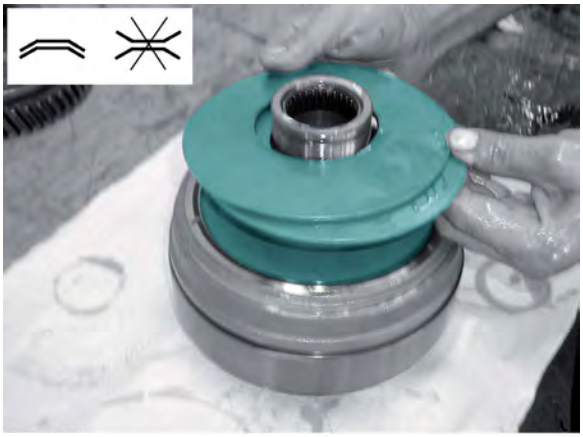

I008582 Fig. 46

18. Fit the gear (15).

I008572 Fig. 47

19. Install the shaft (5) in the centre of the front axle drive clutch.

I008583 Fig. 48

20. Fit the front axle clutch with its shaft (5) under a press.

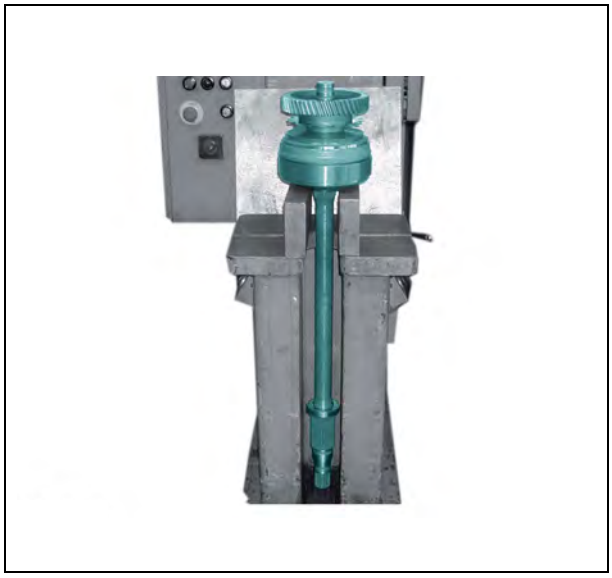

I008584 Fig. 49

21. Using a locally made stirrup, and the press, compress the set of spring washers (17).

22. Fit the circlip (2).

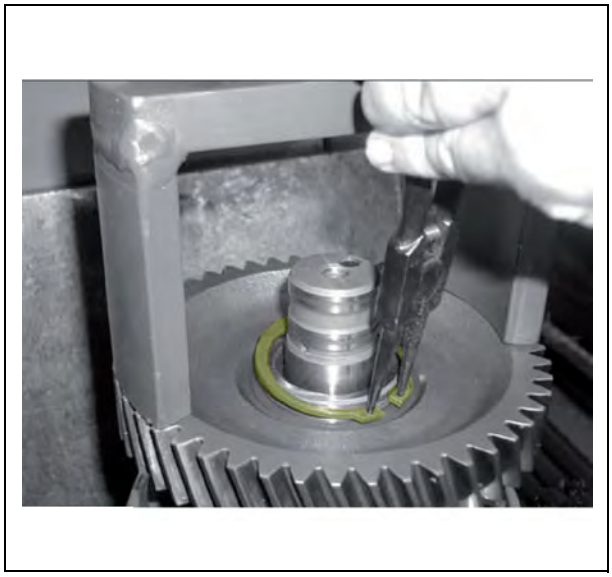

I008571 Fig. 50

8C18

4WD clutch - Service tools

TABLE OF CONTENTS

8D10

Steering unit - General

TABLE OF CONTENTS

A. General

The steering system used on the tractors is a hydrostatic system with no mechanical linkage between the steering wheel and the steering ram.

Its control system is closed centre with a Load Sensing load signal.

The steering system comprises:

- 3 pumps:
  - the steering gear pump
  - the standby pump
  - the Load Sensing pump
- a spool valve block including the priority valves
- a master device the steering unit
- a slave device the steering ram

B. Principles of operation

Pumps

The main steering pump (1) has a displacement of 22,8 cm³. Its maximum flow rate is 57 l/min at 2200 rpm.
Oil from the tank is sucked in by the steering pump through a 300 µ filter.

Flow that is not used for the steering returns to the tank via the thermostatic valve.

The LS pump (2) has a displacement of 75 cm³ and is used for the auxiliary functions of the tractor. In certain conditions, it also supplies oil to the steering system.
When the steering wheel is turned very quickly, this pump supplies the additional flow required via an LS line connected to the 175 bar Orbitrol valve and a boost valve located in the priority block.

The steering standby pump has a displacement of 8 cm³ and is driven by the 4WD shaft. Its flow is added to that of the steering pump. If there is a failure in the steering pump, the standby pump still allows the tractor to be steered, but in forward travel only.

Filtration

The oil from the steering pump is filtered by the 300 µ suction strainer fitted on the spacer.

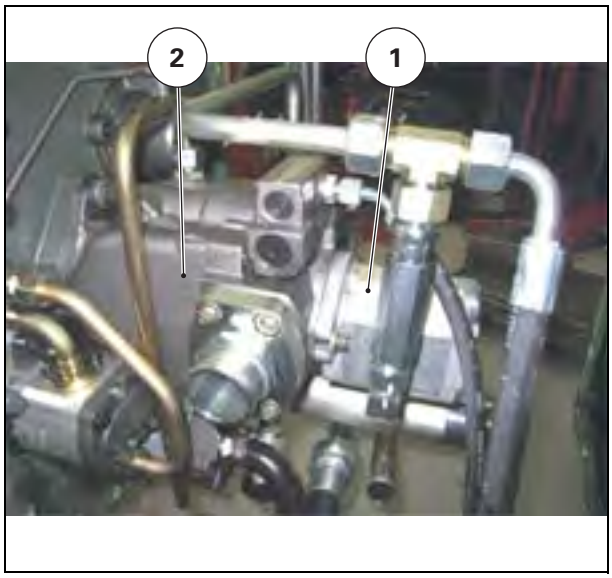

I011808 Fig. 1

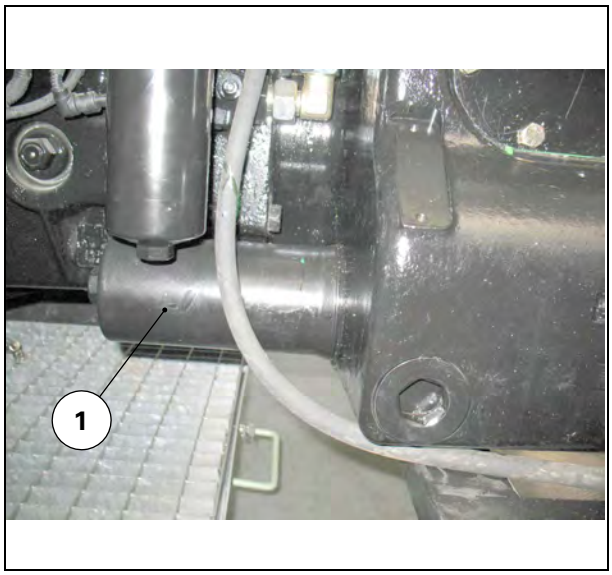

I004146 Fig. 2

During forward travel, the oil from the standby pump is filtered by a cone-shaped strainer (4) integrated into the suction pipe.
During reverse travel, the oil sucked by the standby pump through the strainer located under the valve (5) returns directly to the tank.

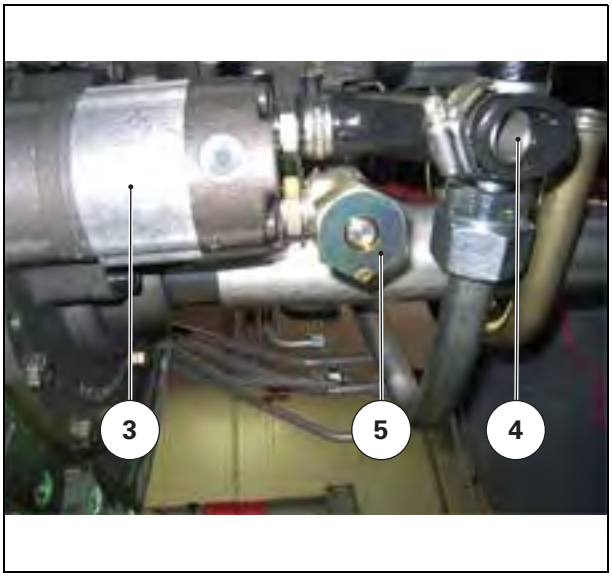

I011809 Fig. 3

Two other non-return valves (6), located at the outlets of the standby and steering pumps, prevent the flow from the steering pump being channelled to the standby pump system, and vice versa.

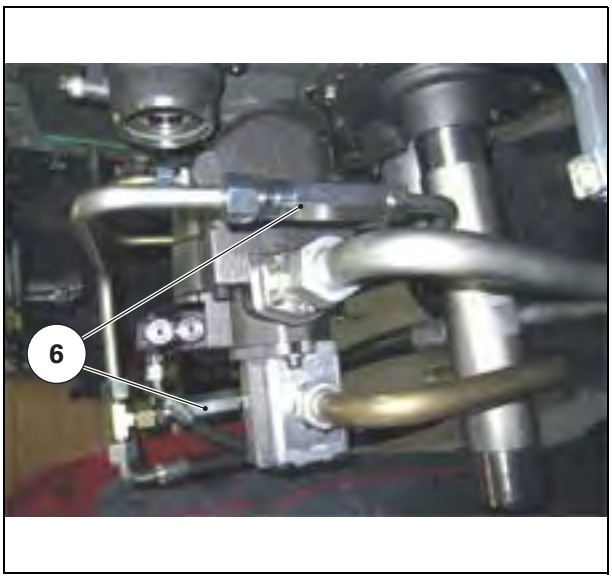

I011810 Fig. 4

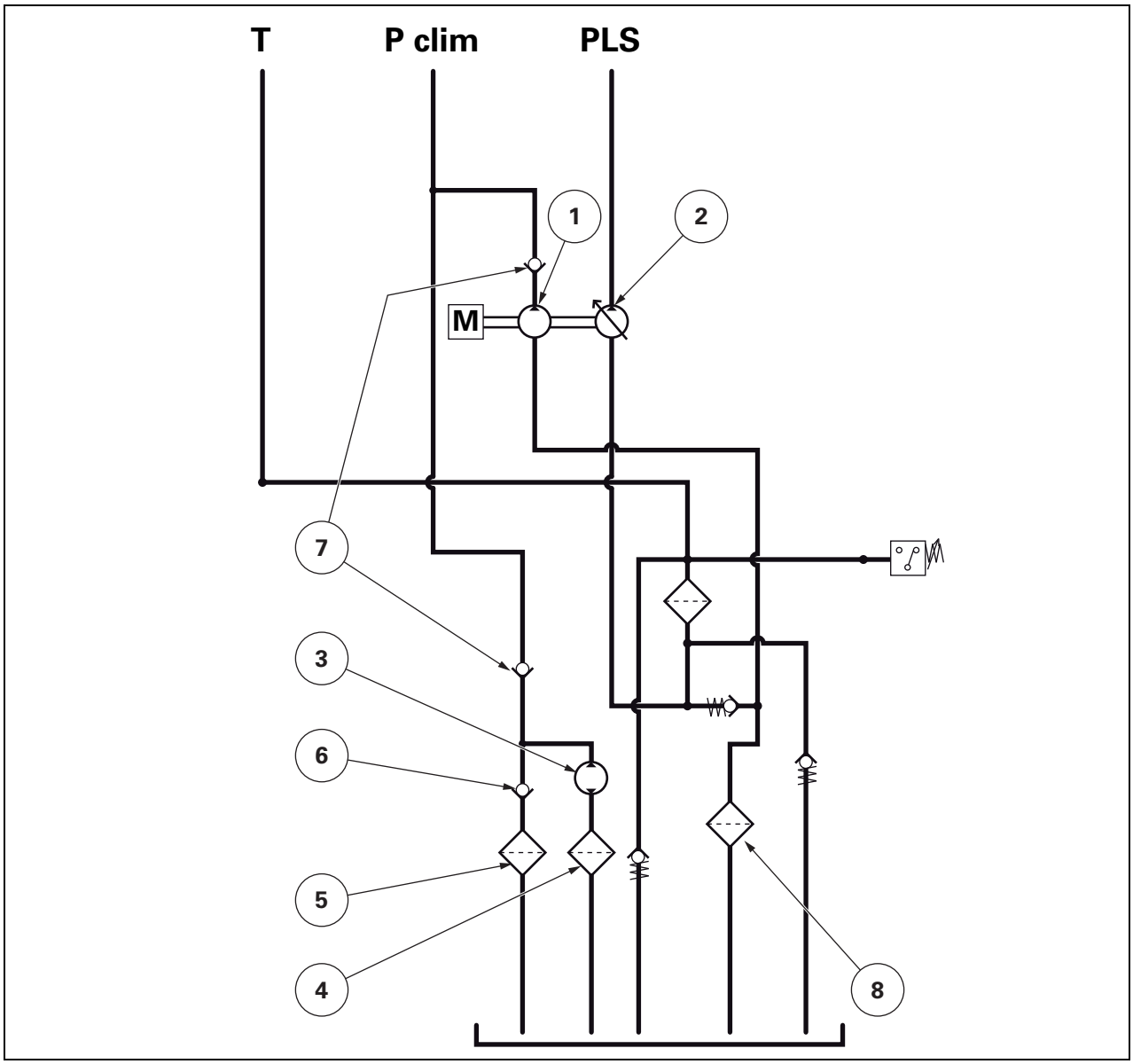

I011811

Fig. 5

Steering unit

The tractor may be fitted with two different types of steering unit:

- As standard, the tractor is fitted with an OSPF 315+OVR steering unit.
  This unit comprises a single-stage hydraulic steering valve (Orbitrol). The action of the steering wheel on this valve controls the flow of oil to activate the steering ram. The Orbitrol comprises a selector spool valve (25) (Fig. 7), a spring centred supply sleeve (27) (Fig. 7) and a drive shaft linked to the steering column.

  It includes the following 5 ports:
  - pressure
  - tank return
  - right-hand steering ram supply
  - left-hand steering ram supply
  - Load Sensing

- The tractor may be fitted with an electronically controlled steering unit as an option
  This Orbitrol unit, OPSF 315 EH LSRM, has a displacement of 315 cm³.

  It provides two additional options compared to the standard unit:
  - accelerated steering (ASR): the ASR system allows the user to decrease the number of steering wheel turns from stop to stop, reducing the movement required of the steering wheel to turn the wheels
  - Auto-Guide: this unit is also used for the Auto-Guide option if fitted to the tractor

Steering sensors

A sensor fitted to the front axle measures the steering angle of the wheels in order to disengage the front axle when this angle exceeds 25° and unlock the differential when it exceeds 10°. This sensor is also used by the Auto-Guide function.

A sensor fitted in the Orbitrol measures the angle of rotation of the steering wheel in order to adjust the oil flow required when the Auto-Guide and ASR are active.

Priority block

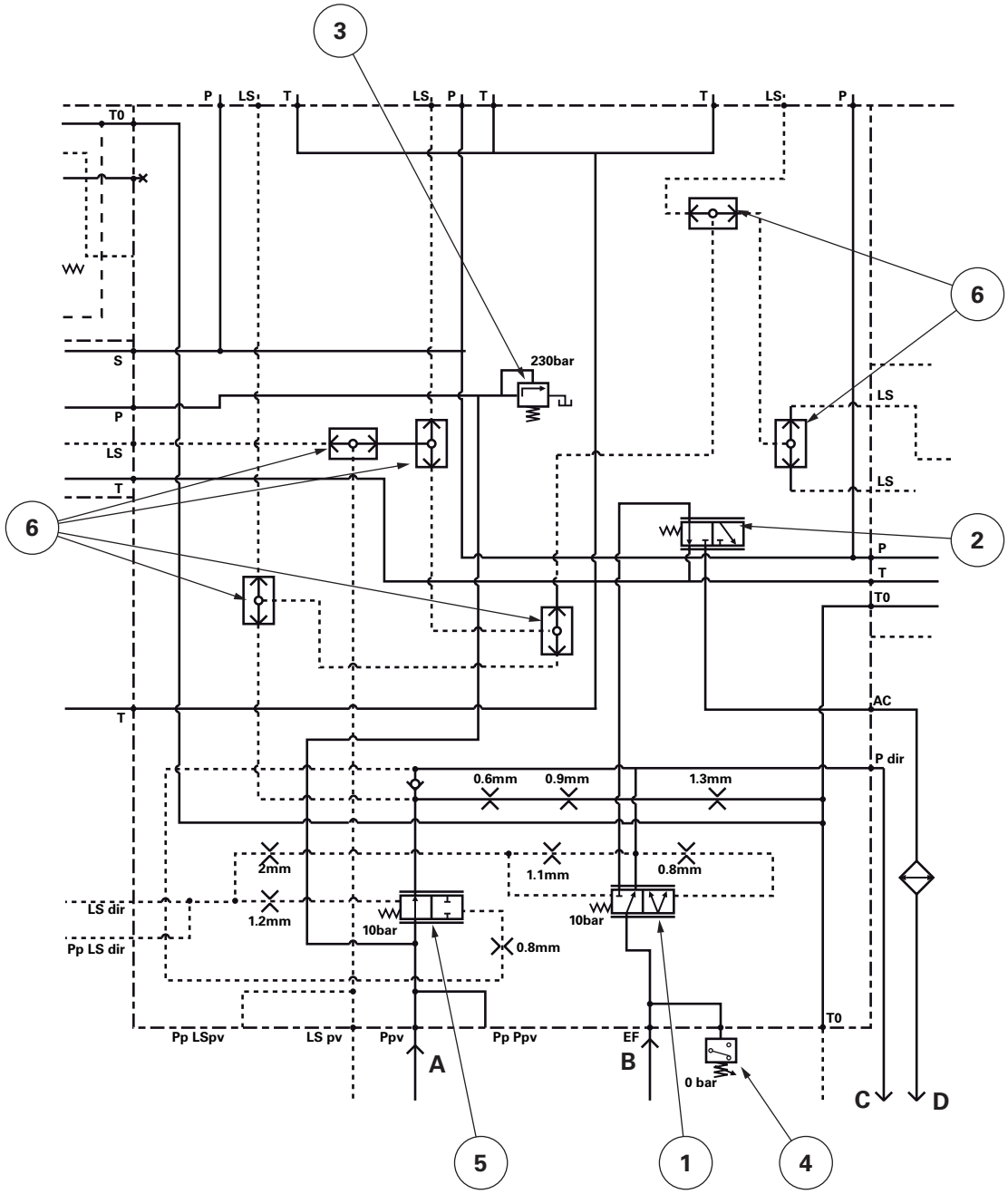

I011851

Fig. 6

(A) LS pump
(B) Steering pump
(C) Orbitrol
(D) Tank
(1) Priority valve
(2) Thermostatic valve
(3) Pressure relief valve
(4) Pressure sensor
(5) Boost valve
(6) Shuttle valves

The spool valve block receives oil from the steering pump. This oil passes through a priority valve (1) (Fig. 6), which is controlled hydraulically by the Load Sensing steering system.

Depending on the steering requirements, this valve distributes the oil between the Orbitrol and a thermostatic valve (2) (Fig. 6).

When the auxiliary oil temperature exceeds 70 °C to 80 °C, the thermostatic valve sends the oil to the cooler. Conversely, if the oil temperature drops below 70 °C, the valve sends the oil straight to the tank.

The steering unit also includes a boost valve (5) (Fig. 6), which sends part of the flow from the LS pump to the steering pump when additional oil is required.

Steering Load Sensing

The steering LS system does not act like the standard LS system. While the standard system activates the variable displacement of the LS pump, this allows the spools of the steering unit valves to be moved so as to restrict the flow and pressure in the steering unit.

At neutral

When the steering wheel is not moved, the LS steering system is connected to the return system to prevent the pressure building up in the system.

Consequences:

- The valve (1) sends oil to the oil cooler and the tank.
- The boost valve (5) (Fig. 6) is in closed position and the LS pump cannot supply the Orbitrol.

When turning

When the operator turns the steering wheel to the right or left, the steering LS line closes at the level of the Orbitrol spool. The pressure increases in the system.

Consequences:

- The pressure becomes equal on either side of the valve (1) (Fig. 6) and the power of the spring set to 10 bar directs the spool at full flow to the steering system.
- The boost valve (5) (Fig. 6) is supplied if necessary. For example, if the engine is running at low speed, the steering pump also runs at idle, at minimum flow rate. If the operator turns the steering wheel in difficult conditions (e.g. when the tractor is stationary), steering is harder because there is not enough flow to supply the Orbitrol. The LS line opens the boost valve, allowing the variable displacement pump to supply the steering system. The additional flow is controlled by the shuttle valves (6) (Fig. 6) in the LS line of the variable displacement pump. When the rams reach their stop, the steering LS pressure decompresses through the main relief valve of the

Orbitrol, set to 175 bar, returning the spool valves to position in order to redistribute the oil flow to the cooler and the return. The steering system is protected by a relief valve set to 175 bar. When this valve opens, the LS line brings the priority valve back to the return position.

With electrohydraulically controlled steering unit (Fig. 10)

When the electrohydraulically controlled steering unit option is fitted, the LS line includes a 2/2 valve (4) (Fig. 10) to control the Auto-Guide spool valves.

C. Schematic diagram

Standard steering unit - OSPF 315+OVR

The standard steering unit comprises:
- 2 235 bar security valves (20)
- a 175 bar relief valve (18)

Cubic capacity..... 315 cm³
Return to neutral torque of
springs..... 1,5 daNm

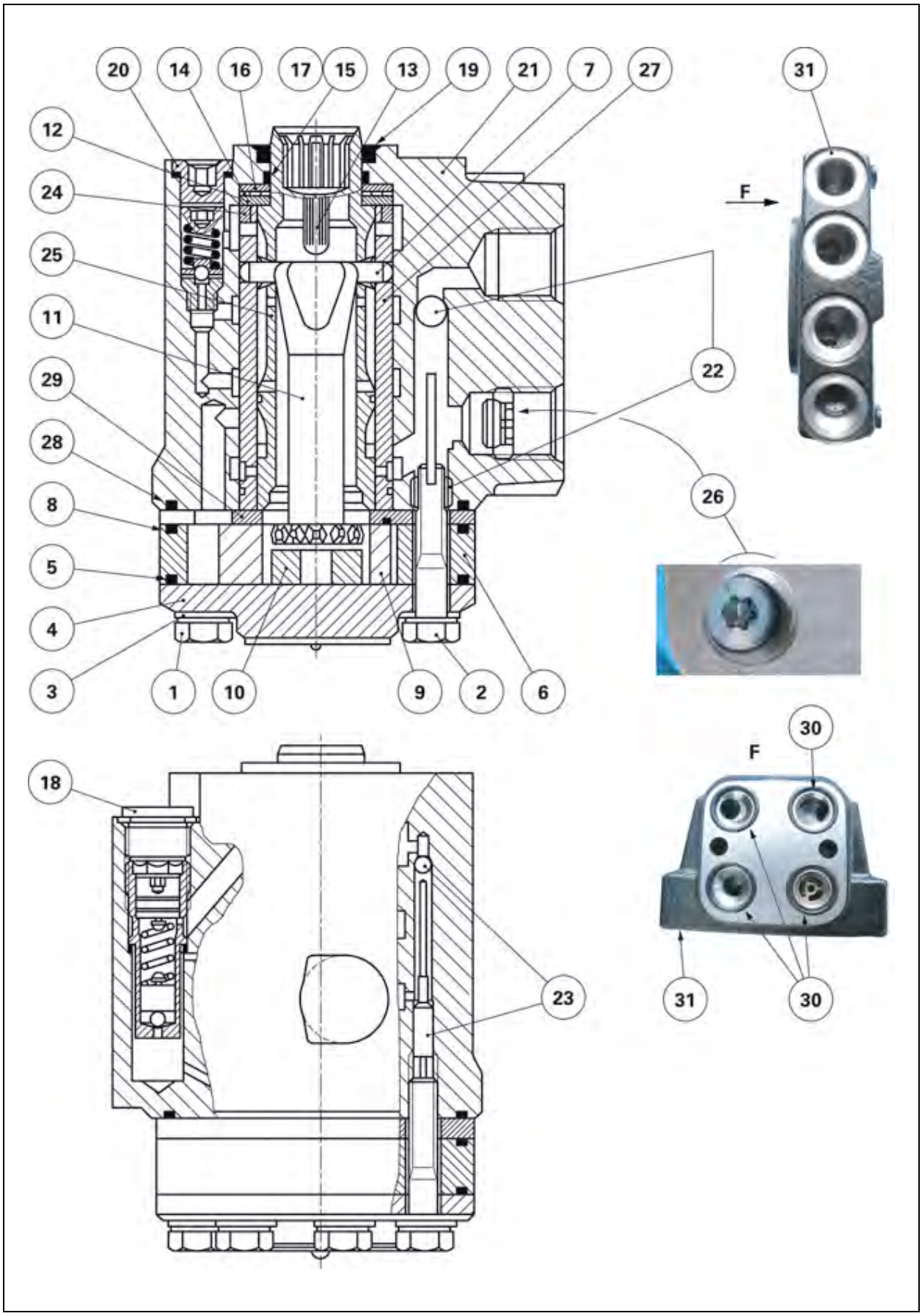

I011812

Fig. 7

(1) Screw
(2) Screw
(3) Seal
(4) Cover plate
(5) "O" ring
(6) Stator
(7) Pin
(8) "O" ring
(9) Rotor
(10) Spacer
(11) Link shaft
(12) Washer
(13) Centring springs
(14) Needle roller bearing
(15) Ring
(16) Washer
(17) "O" ring
(18) Relief valve
(19) Seal
(20) Security valve
(21) Steering spool valve (Orbitrol)
(22) Non-return suction valve
(23) Suction valve
(24) Ring
(25) Spool valve
(26) Non-return valve
(27) Sleeve
(28) "O" ring
(29) Distribution plate
(30) "O" rings
(31) Manifold
(32) Screw

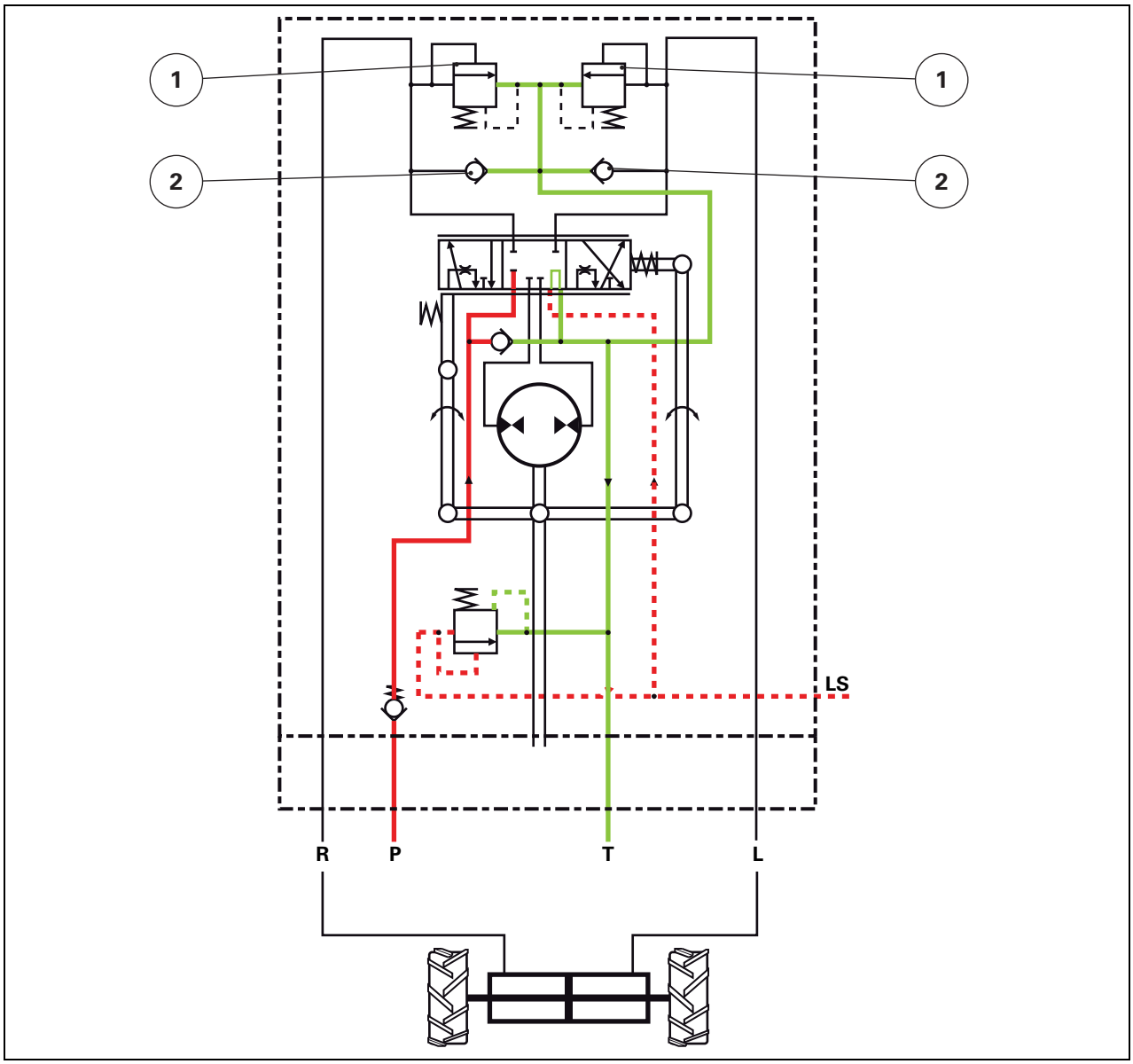

I011813

Fig. 8

Steering in neutral position (engine running)

In neutral position (engine running), the Orbitrol spool valve (25) is centred in relation to the sleeve (27) by the springs (13). The right and left-hand channels are not supplied and the steering LS line is connected to the tank return.

Two security valves (1) and two non-return suction valves (2) are integrated into the left and right-hand outlet ports. The security valve protects the system between the ram and the steering unit. The suction valve then allows the other side of the system to compensate for any lack of oil.

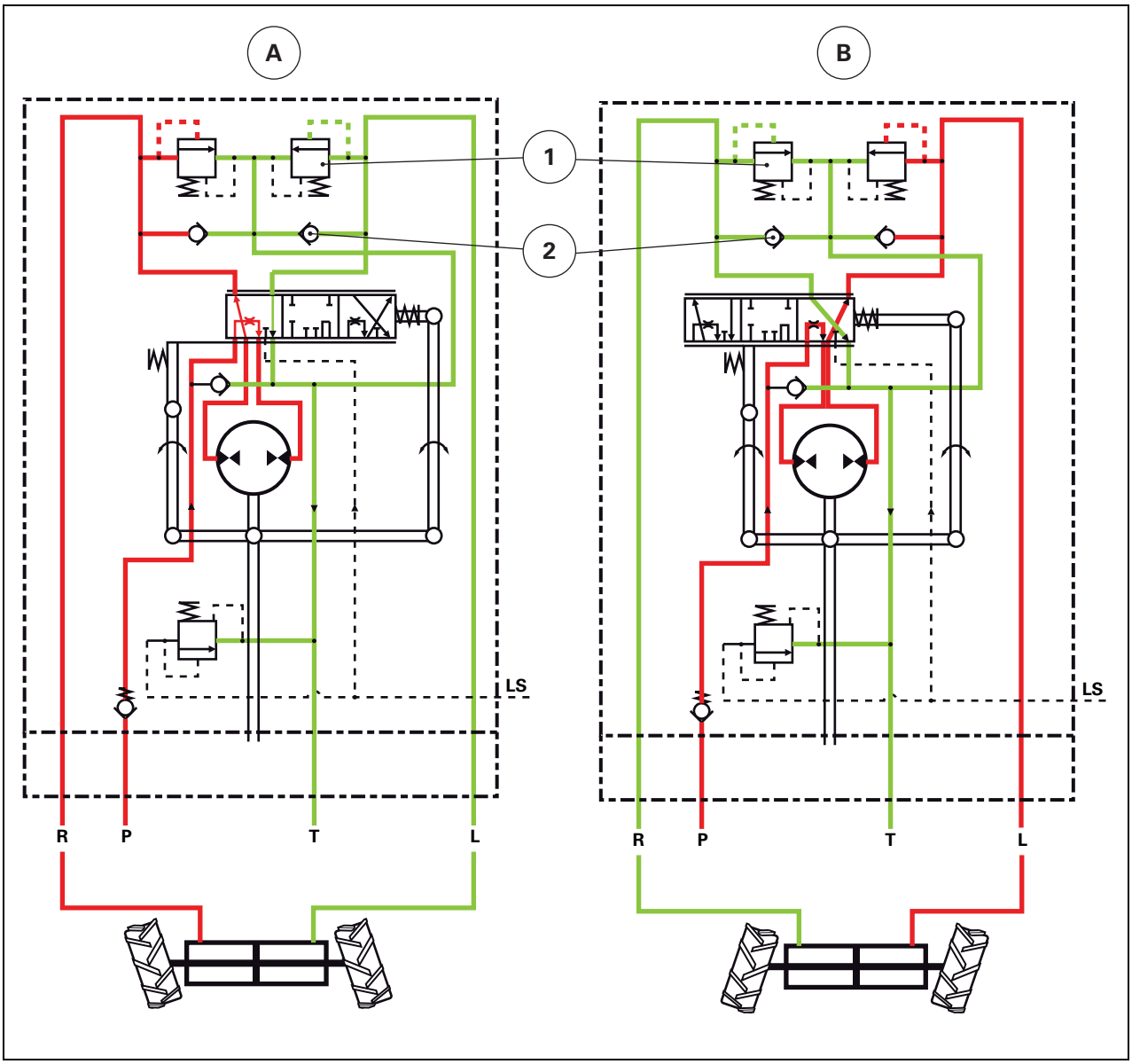

I011814

Fig. 9

(A) Turning right
(B) Turning left

Steering in lock position (engine running)

The initial movement of the steering wheel moves the spool against the leaf springs. This opens the closed-centre pressure port and aligns the notches of the spool with the ports in the sleeve, thus allowing the oil to flow to the metering valve. When the steering wheel is subsequently moved, this makes the metering valve, sleeve and wheel rotate further. At the same time, the metering valve controls the oil flow and channels it back to the sleeve and spool. The oil return is then sent via the notches in the spool, which aligns with the holes in the sleeve and channels the oil to one side or the other of the steering ram (depending on the movement of the steering ram). The steering ram oil return is sent to the return channel (by the alignment of the notches in the spool valve spool with the holes in the sleeve).

A relief valve is integrated into the channel, between the inlet and the spool valve, in the steering unit. The purpose

of this valve is to protect the pump against excessive pressure, for example when the wheels are at full steering lock or are pressing against an obstruction.

Unit for electronic power-assisted steering - OPSF 315 EH LSRM

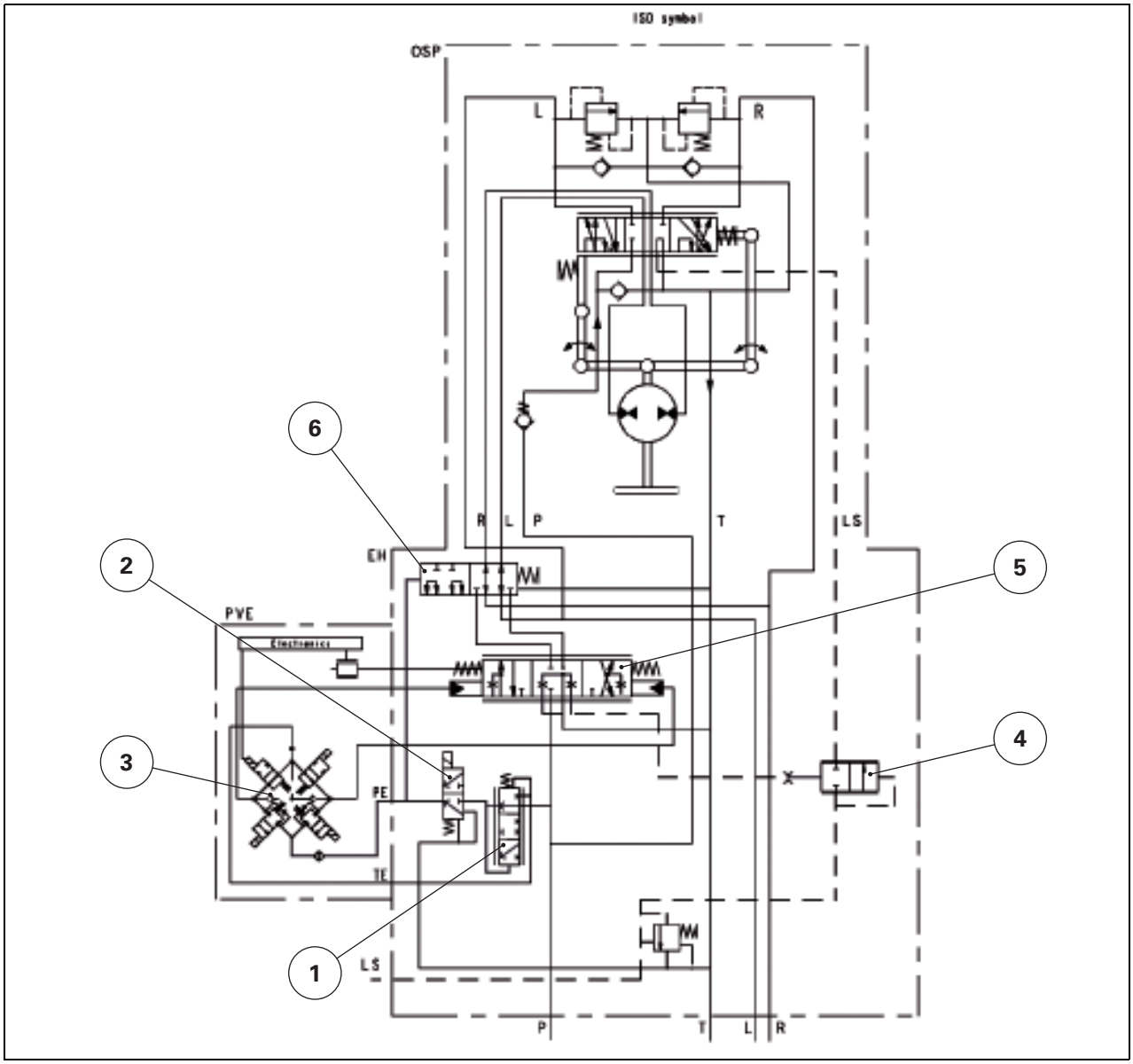

I011815

Fig. 10

The supply pressure coming from P flows through a valve (1) used to reduce the pressure in the electrohydraulic control head.

The valve (2) provides security when the ASR is not activated. The valve stops the oil flow to prevent the ASR from engaging in unfavourable conditions.

If the user activates the ASR, oil flows through the valve (2) to 4 electrically controlled solenoid valves (3). These 4 solenoid valves allow the proportional spool (5) to be moved when the Auto-Guide and ASR are operating, in order to supply the steering ram. The oil flow is then added to that of the Orbitrol, allowing the steering to be turned more quickly.

The oil flow then passes through a reaction/non-reaction valve (6), which allows or prevents the flow of oil through it, in order for the pressure from the ram to return the wheels to a straight line.

8D11

Section intentionally left blank

TABLE OF CONTENTS

8D12

Steering unit - Diagrams and plans

TABLE OF CONTENTS

A. Hydraulics diagram

Different systems

(1) Variable displacement pump
(2) Orbitrol
(3) ParkLock control unit
(4) Brake master cylinder
(5) Suspended front axle unit
(6) Main brake unit

Pumps

(P1) Variable displacement pump
(P2) Steering pump
(P3) Steering standby pump

Filters - Strainers

(F1) Filter on the return to the tank
(F2) Suction strainer
(F3) Standby pump suction strainer
(F4) Standby pump suction strainer

Rams

(V1) Rear linkage rams
(V2) Steering ram
(V3) ParkLock rams
(V4) Right-hand brake fitting
(V5) Left-hand brake fitting
(V6) Front axle suspension ram
(V7) Front cab suspension ram
(V8) Rear cab suspension ram
(V9) Auto-hitch ram
(V10) Trailer brake ram, if connected

Accumulators

(AC1) ParkLock accumulator
(AC2) Main brake accumulator
(AC3) Front axle suspension left-hand side accumulator
(AC4) Front axle suspension right-hand side accumulator
(AC5) Front cab suspension ram accumulators
(AC6) Rear cab suspension ram accumulators

Other components

(R1) Oil cooler

Different systems

(7) Trailer brake unit
(8) Cab suspension unit
(9) Auto-hitch unit
(10) Priority block
(11) Connection unit
(12) Connection unit
(13) Rear linkage

A.1 Main hydraulics diagram

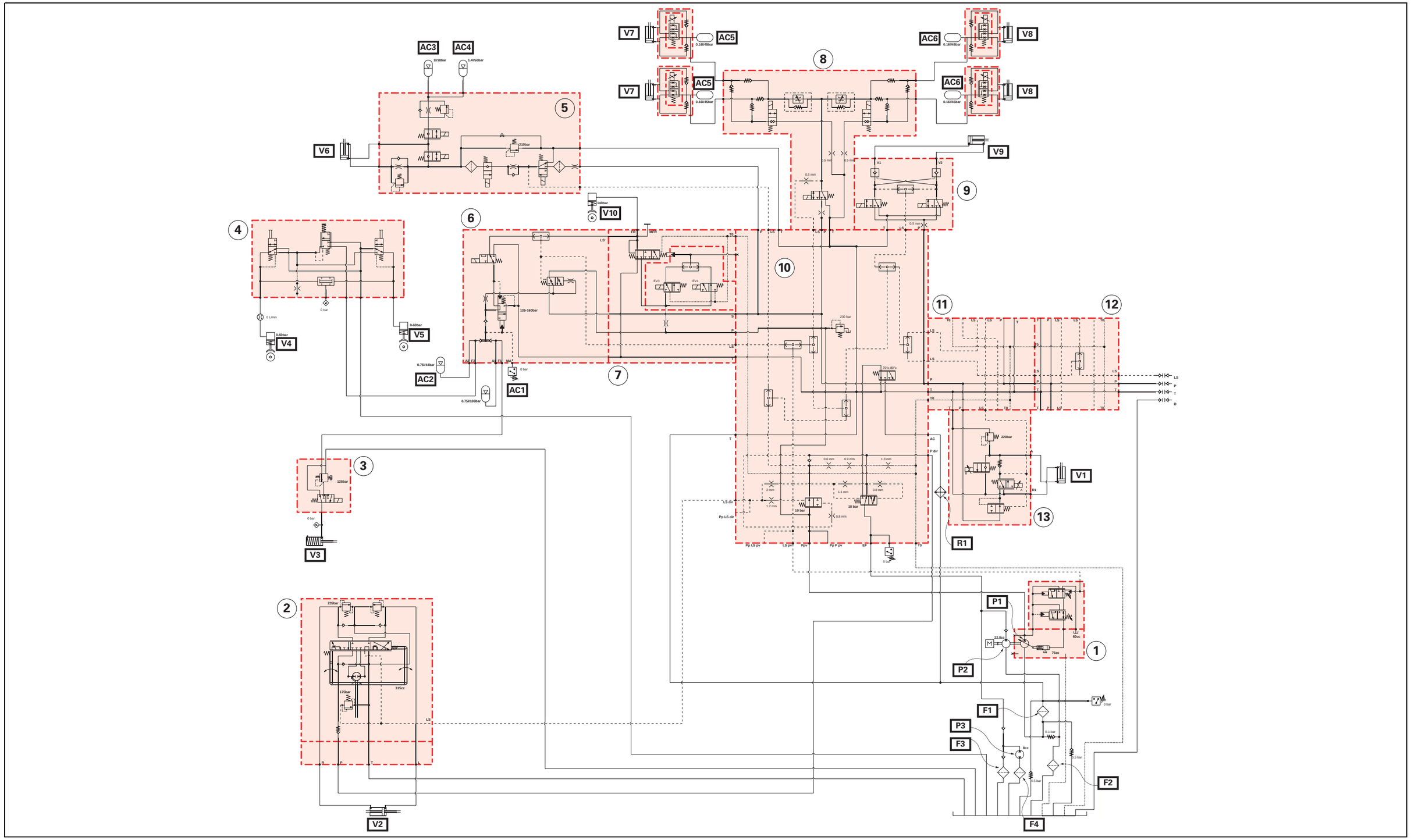

Fig. 1

B. Electrical diagrams

B.1 Identification of electrical connectors and harnesses

Identification of electrical connectors

X1 - Auxiliary hydraulic oil temperature sensor
X2 - Auxiliary hydraulic oil filter blockage switch
X3 - 540 rpm PTO speed solenoid valve
X4 - 1000 rpm PTO speed solenoid valve
X5 - 4WD solenoid valve
X6 - Differential lock solenoid valve
X7 - Rear PTO solenoid valve
X8 - Bevel gear theoretical speed sensor
X9 - Transmission oil high pressure sensor 1
X10 - Collecting shaft speed sensor
X11 - Solenoid valve limiting speed to 30 kph
X12 - Coupler function solenoid valve
X13 - Hare range solenoid valve
X14 - Tortoise range solenoid valve
X15 - PTO clutch speed sensor
X16 - PTO shaft speed sensor
X17 - Hare/Tortoise range position sensor
X18 - Transmission control module
X19 - Transmission hydraulic oil temperature sensor
X20 - Transmission filter blockage switch
X21 - ParkLock brake pressure sensor
X22 - Radar
X23 - Steering pressure sensor
X24 - Auxiliary hydraulic oil gauge
X25 - Engine speed sensor
X26 - Pneumatic brake solenoid valve
X27 - Rear linkage lifting solenoid valve
X28 - Rear linkage lowering solenoid valve
X29 - Dual Control socket connector
X30 - Rear linkage position sensor
X31 - Rear linkage right-hand draft sensor
X32 - Rear linkage left-hand draft sensor
X33 - Transmission harness CAN junction
X34 - Transmission oil high pressure sensor 2
X35 - ParkLock hydraulic system pressure sensor
X36 - LS signal breaker solenoid valve
X37 - ParkLock pressure reversing solenoid valve
X38 - Trailer braking proportional solenoid valve
X39 - Trailer braking safety solenoid valve
X40 - Front linkage single/double acting function solenoid valve
X41 - Divider solenoid valve 1
X42 - Divider solenoid valve 2
X43 - Auto-hitch lifting solenoid valve
X44 - Auto-hitch lowering solenoid valve
X45 - Bleed for pneumatic suspended cab front and rear systems
X46 - Rear left-hand ram position sensor for cab suspension
X47 - Rear right-hand unit for suspended cab
X48 - Rear left-hand unit for suspended cab
X49 - Suspended cab rear lowering solenoid valve
X50 - Suspended cab front lowering solenoid valve
X51 - Transmission harness earth (chassis)
X52 - Engine harness/transmission harness junction
X53 - Cab transmission harness/transmission harness junction
X54 - Suspended cab lifting solenoid valve
X55 - Instrument panel
X56 - Power Control lever
X57 - DOT Matrix keyboard
X58 - Windscreen wiper and indicator control unit
X59 - DOT Matrix keyboard connection on instrument panel
X60 - Engine harness/instrument panel harness junction
X61 - Cab transmission harness/engine harness junction
X62 - Instrument panel harness/cab transmission harness junction
X63 - Instrument panel harness connection on fuse box
X64 - Instrument panel harness connection on fuse box
X65 - Front windscreen wiper motor
X66 - Left-hand brake pedal sensor
X67 - Right-hand brake pedal sensor
X68 - Clutch pedal sensor
X69 - Cab interior temperature sensor
X70 - Solar radiation sensor
X71 - Throttle pedal sensor
X72 - ParkLock switch on Power Control lever
X73 - Buzzer Control
X74 - Buzzer Supply (+12 V APC)
X75 - Pillar harness/right-hand fender harness junction
X76 - Rear right-hand indicator
X77 - Rear right-hand side light and stop light
X78 - Work light on rear right-hand fender
X79 - -
X80 - -
X81 - -
X82 - -
X83 - -
X84 - -
X85 - -
X86 - -
X87 - Linkage lifting/lowering switch on right-hand fender
X88 - Rear right-hand NA indicator extension
X89 - Earth (chassis)
X90 - Pillar harness/left-hand fender harness junction
X91 - Rear left-hand indicator
X92 - Rear left-hand side light and stop light
X93 - Work light on rear left-hand fender
X94 - PTO ON/OFF switch on left-hand fender
X95 - PTO Stop switch on left-hand fender
X96 - Hydraulic spool valve switch on left-hand fender
X97 - Linkage lifting/lowering switch on left-hand fender
X98 - Rear left-hand NA indicator extension
X99 - PTO and linkage console harness/cab transmission harness junction
X100 - Instrument panel harness earth (chassis)
X101 - Instrument panel harness/electric rear-view mirror harness junction
X102 - Right-hand fender lighting harness/trailer connector harness junction
X103 - Armrest harness/cab transmission harness junction
X104 - Armrest Autotronic 5

X105 - Datatronic CCD
X106 - Transmission lever in armrest
X107 - Headland mode switch (headland function)
X108 - FingerTIP 3
X109 - FingerTIP 4
X110 - FingerTIP 5
X111 - DTM dynamic transmission mode switch
X112 - Joystick
X113 - Armrest 6-button keyboard
X114 - Supply on fuse box for 3rd spool valve
X115 - Supply on fuse box for 4th spool valve
X116 - +12 V battery supply (for lighting module)
X117 - Isobus +12 V battery power socket
X118 - Automatic PTO switch
X119 - Rear linkage lifting/lowering switch
X120 - Datatronic CCD navigation keyboard
X121 - Rear linkage height/depth adjustment thumb wheel
X122 - Hand throttle
X123 - Hare/Tortoise range shift switch
X124 - Pedal/lever mode switch
X125 - SV1 speed setting potentiometer
X126 - SV2 speed setting potentiometer
X127 - Front PTO ON/OFF switch
X128 - Rear PTO ON/OFF switch
X129 - Fuse box +12 V battery connection
X130 - FingerTIP 6 front linkage function
X131 - Front linkage suspension solenoid valve
X132 - Instrument panel harness/armrest harness junction
X133 - Console harness/cab transmission harness junction
X134 - Console harness/pillar harness junction
X135 - Braking pressure sensor
X136 - Differential lock switch
X137 - 4WD switch
X138 - Hazard warning lights indicator light and switch
X139 - Suspended front axle switch
X140 - Suspended front axle setting potentiometer
X141 - Suspended cab switch
X142 - Suspended cab setting potentiometer
X143 - Variable steering switch (fast steering)
X144 - Variable steering setting potentiometer (fast steering)
X145 - PTO/linkage console
X146 - Rear linkage suspension switch
X147 - Roof harness/pillar harness junction
X148 - Roof harness/pillar harness junction
X149 - Headlights module (black connector)
X150 - Pillar harness/cab power socket harness junction
X151 - Pillar harness/cab power socket harness junction
X152 - Start switch
X153 - Non-Isobus implement connector
X154 - Suspended front axle lifting solenoid valve
X155 - Cigarette lighter socket (power)
X156 - Cigarette lighter socket (backlighting)
X157 - Left-hand side +12 V socket (power)
X158 - Left-hand side +12 V socket (backlighting)
X159 - Suspended front axle lowering solenoid valve
X160 - Console harness earth (chassis)
X161 - Solenoid valve 1 for suspended front axle suspension
X162 - Pillar harness connection on fuse box
X163 - Solenoid valve 2 for suspended front axle suspension
X164 - Pillar harness/cab transmission harness junction
X165 - Automatic air conditioning harness/pillar harness junction
X166 - Suspended front axle position sensor
X167 - +12 V APC fuse box connection
X168 - Pneumatic brake system pressure sensor
X169 - Power socket control switch (in cab)
X170 - Pillar harness connection on fuse box
X171 - Cab transmission harness connection on fuse box
X172 - Cab transmission harness connection on fuse box
X173 - Cab transmission harness earth
X174 - Autotronic 4 transmission controller
X175 - Emergency control switch
X176 - Earth (Autotronic 4 transmission controller)
X177 - Autotronic 5 Linkage
X178 - ParkLock/suspended front axle/passive suspended cab Autotronic 5
X179 - Main lighting, sidelight/dipped light activation switch
X180 - Front windscreen washer pump
X181 - Front linkage single acting / double acting function switch
X182 - Linkage external lifting switch
X183 - Diagnostics connector (tractor-Isobus CAN)
X184 - Diagnostics connector (engine-valve CAN)
X185 - Sisu EEM unit
X186 - Starter
X187 - Engine start relay
X188 - Engine identification module (ID module)
X189 - Fuel lift pump
X190 - Vistronic fan
X191 - Diesel fuel preheater
X192 - B + alternator 1
X193 - B + alternator 2
X194 - D + alternator 1
X195 - D + alternator 2
X196 - In line fuse (225 A)
X197 - Diesel fuel gauge
X198 - Pneumatic trailer brake sensor
X199 - Work light on left-hand step
X200 - Work light on right-hand step
X201 - Engine harness earth
X202 - Front accessory connection socket harness/front function harness junction
X203 - Engine harness/front headlights harness junction
X204 - Cooling unit harness/engine harness junction
X205 - Front axle harness/engine harness junction
X206 - Sensor detecting water in the diesel fuel
X207 - Pneumatic seat adjustment control
X208 - Front linkage suspension switch LED
X209 - Rear linkage external lowering switch
X210 - Orbitrol steering sensor (SASA sensor)
X211 - Rear Dual Control connector

X212 - Instrument panel harness/armrest harness junction
X213 - Power socket for additional heating
X214 - Armrest harness/cab transmission harness junction
X215 - Trailer connector (right-hand side light and number plate lights)
X216 - Reversing light
X217 - Isobus CAN connector
X218 - External Isobus tool connector
X219 - Cab Isobus harness/external Isobus harness junction
X220 - Trailer connector (left-hand side light)
X221 - Trailer connector (right-hand indicator)
X222 - Trailer connector (left-hand indicator)
X223 - Trailer connector (brake lights)
X224 - Trailer connector (earth)
X225 - Trailer connector (reversing light)
X226 - Trailer connector harness earth
X227 - Console harness/cab transmission harness junction
X228 - Front linkage single/double-acting function LED
X229 - 120 Ohm CAN 1 resistor (cab transmission harness)
X230 - 120 Ohm CAN 2 resistor (cab transmission harness)
X231 - 120 Ohm CAN 3 resistor (cab transmission harness)
X232 - 120 Ohm CAN 4 resistor (cab transmission harness)
X233 - Cab transmission harness/Isobus harness junction
X234 - 120 Ohm CAN ATC resistor
X235 - Front axle steering sensor (WAS sensor)
X236 - Electrohydraulic Orbitrol (grey connector)
X237 - Electrohydraulic Orbitrol (black connector)
X238 - Connector 1 for valve harness
X239 - Connector 2 for valve harness
X240 - 120 Ohm resistor for electrohydraulic spool valves
X241 - Sisu engine preheating supply (Grid Heater)
X242 - Exhaust temperature sensor
X243 - AdBlue/DEF reservoir (urea) level gauge and temperature sensor
X244 - CAN SCR harness
X245 - +12 V APC supply for SCR
X246 - Auto-Guide external harness/engine harness junction
X247 - Roof harness/electric rear-view mirror harness junction
X248 - Right and left-hand electric rear-view mirror adjustment switch
X249 - External rear-view mirror defroster switch
X250 - Power socket in cab
X251 - In line fuse (225 A)
X252 - Automatic air conditioning condenser
X253 - Air filter vacuum sensor
X254 - Horn (earth)
X255 - Horn
X256 - Roof harness/hand rail harness junction
X257 - Side light and indicator on hand rail (right and left)
X258 - Main beam on hand rail (right and left)
X259 - Hand rail upper work light
X260 - Hand rail upper work light
X261 - Front right-hand unit for suspended cab
X262 - Front left-hand unit for suspended cab
X263 - Floating stop relay control (US front-end loader)
X264 - Front linkage suspension switch
X265 - Rear linkage suspension switch indicator light
X266 - Rear linkage diagnostic and lifting/lowering LEDs
X267 - Switch for left-hand side heater
X268 - Pillar harness connection on fuse box
X269 - Cab suspension harness/cab transmission harness junction
X270 - Front accessories connection socket (rotary beacon)
X271 - Front accessories connection socket (+12 V battery)
X272 - Front accessories connection socket (+12 V APC)
X273 - Front accessories connection socket (main beam light)
X274 - Front accessories connection socket (main beam light)
X275 - Front accessories connection socket (work light)
X276 - Earth for front accessory connection socket harness
X277 - Front linkage lifting/lowering external control
X278 - Front linkage lifting switch (external)
X279 - Dual Control or TIC position sensor
X280 - Front linkage rams pressure sensor
X281 - Solenoid valve for front PTO
X282 - Roof harness/cab Auto-Guide harness junction
X283 - TopDock
X284 - Headlights module keyboard
X285 - Ad Blue (urea) metering valve
X286 - Ad Blue (urea) injection valve
X287 - Ad Blue (urea) reservoir preheating valve
X288 - 12/24 V converter for SCR system
X289 - SCR management module
X290 - Front accessory connection socket harness/front function harness junction
X291 - Front accessory connection socket harness/front function harness junction
X292 - Front windscreen washer pump
X293 - 540 rpm PTO switch
X294 - 540 eco rpm PTO switch
X295 - 1000 rpm PTO switch
X296 - USB connector
X297 - PTO/linkage console backlighting
X298 - Headland mode switch (headland function)
X299 - Linkage lowering speed potentiometer
X300 - -
X301 - PTO stop switch on left-hand fender
X302 - Switch for pre-selected engine speed A
X303 - Switch for pre-selected engine speed B
X304 - Instrument panel harness/armrest harness junction
X305 - Headlights module (grey connector)
X306 - Switch for pre-selected engine speed A/B
X307 - FingerTIP 1
X308 - FingerTIP 2
X309 - SV1/SV2 speed regulator switch

X310 - Divider 1 indicator light and solenoid valve (earth)
X311 - Divider 2 indicator light and solenoid valve (+12 V)
X312 - SV1/SV2 speed setting potentiometer in armrest
X313 - Pedal/lever transmission control mode switch and DTM switch
X314 - Hydraulics switch 1, road/field mode
X315 - Hydraulics switch 2, road/field mode
X316 - Headland mode switch (headland function)
X317 - + battery supply for headlights module
X318 - Automatic air conditioning compressor
X319 - + battery supply for headlights module
X320 - + battery supply on headlights module
X321 - + battery supply on headlights module
X322 - + battery supply on headlights module
X323 - + battery supply on headlights module
X324 - +12 V APC fuse box connector (battery isolator switch)
X325 - Pillar harness / non-Isobus implement connector harness junction
X326 - Pillar harness / non-Isobus implement connector harness junction
X327 - Battery earth (chassis)
X328 - Battery isolator switch earth terminal
X329 - Battery isolator switch earth terminal
X330 - Battery negative terminal contact (battery isolator switch)
X331 - Pillar harness connection on fuse box
X332 - + battery (start switch)
X333 - Engine harness earth (chassis)
X334 - Battery isolator switch earth terminal
X335 - Battery isolator switch earth terminal
X336 - Battery isolator switch
X337 - Pneumatic brake ParkLock solenoid valve
X338 - Earth (battery isolator switch)
X339 - Pneumatic trailer braking solenoid valve
X340 - + terminal on battery for fuse box
X341 - Starter supply
X342 - Positive battery terminal
X343 - RS232 diagnostics connector for Auto-Guide
X344 - Isobus connector in cab
X345 - Supply for additional terminal (mitron unit)
X346 - Auto-Guide switch
X347 - Cab transmission harness connection on fuse box
X348 - Cab transmission harness connection on fuse box
X349 - -
X350 - Front right-hand grille work light
X351 - Front right-hand grille work light
X352 - Front right-hand grille work light
X353 - Front left-hand grille work light
X354 - Front left-hand grille work light
X355 - Front left-hand grille work light
X356 - Right-hand main beam and dipped light
X357 - Left-hand main beam and dipped light
X358 - Outside temperature sensor
X359 - Cab suspension harness/cab transmission harness junction
X360 - Pillar harness connection on fuse box
X361 - Pillar harness connection on fuse box
X362 - Fuse box (+12 V battery)
X363 - Auto-hitch (Dromone) switch
X364 - 120 Ohm resistor for Auto-Guide/Isobus CAN network
X365 - Hand rail lower work light
X366 - Pneumatic brake harness / transmission harness junction
X367 - Switch 1 on joystick
X368 - Switch 2 on joystick
X369 - Engine speed + switch
X370 - Engine speed - switch
X371 - Engine speed stop switch
X372 - Orbitrol safety solenoid valve
X373 - Left-hand 12 V socket (cab) (power)
X374 - Left-hand 12 V socket (cab) (backlighting)
X375 - Instrument panel harness/cab transmission harness junction
X376 - Fuse box (reserve for + APC)
X377 - Fuse box (supply for cab suspension compressor)
X378 - FNRP lever and button
X379 - Front left-hand work light on roof
X380 - Front right-hand work light on roof
X381 - Front left-hand work light on roof
X382 - Front right-hand work light on roof
X383 - Front left-hand roof indicator
X384 - Front right-hand roof indicator
X385 - Rear left-hand work light on roof
X386 - Rear right-hand work light on roof
X387 - Rear left-hand work light on roof
X388 - Rear right-hand work light on roof
X389 - Rear left-hand work lights
X390 - Rear right-hand work lights
X391 - Rear left-hand roof indicator
X392 - Rear right-hand roof indicator
X393 - Earth
X394 - Radio aerial connector
X395 - Radio supply
X396 - Radio speaker connector
X397 - Front left-hand speaker
X398 - Front right-hand speaker
X399 - Rear left-hand speaker (+ supply)
X400 - Rear right-hand speaker (+ supply)
X401 - Rear left-hand speaker (- supply)
X402 - Rear right-hand speaker (- supply)
X403 - Rear windscreen wiper motor
X404 - Door switch
X405 - Interior light (earth)
X406 - Interior light (control)
X407 - Interior light (+12 V battery supply)
X408 - Right-hand console light
X409 - Left-hand rotary beacon
X410 - Right-hand rotary beacon
X411 - Rear windscreen wiper switch
X412 - Radio aerial
X413 - Earth (aerial)
X414 - Left-hand number plate light
X415 - Right-hand number plate light
X416 - Radio supply
X417 - Radio speaker connector
X418 - Earth
X419 - Earth
X420 - Rotary beacon harness earth (chassis)

X421 - Earth
X422 - Roof harness earth (chassis)
X423 - Left-hand side fan ON/OFF switch
X424 - Fan speed control knob
X425 - Air conditioning switch
X426 - Air conditioning indicator light
X427 - Manual air conditioning module
X428 - Electronic thermostat for heating
X429 - Speed 1relay for fan
X430 - Speed 2relay for fan
X431 - Speed 3relay for fan
X432 - Speed 4relay for fan
X433 - Left-hand heating resistor
X434 - Right-hand fan
X435 - Left-hand fan
X436 - Left-hand side fan switch
X437 - Relay for left-hand side fan
X438 - Earth (automatic air conditioning)
X439 - Air conditioning control module (blue connector)
X440 - Air conditioning control module (yellow connector)
X441 - Heating temperature sensor
X442 - TT2 sensor
X443 - Evaporator temperature sensor
X444 - Right-hand fan adapter module (signal)
X445 - Left-hand fan adapter module
X446 - Right-hand fan adapter module (supply)
X447 - Left-hand fan adapter module (supply)
X448 - Separation harness for automatic air conditioning
X449 - Motor for left-hand heating shutter
X450 - Motor for right-hand heating shutter
X451 - Motor for heating mixer shutter
X452 - Relay for heater pump
X453 - Heater accelerator pump
X454 - Earth (roof)
X455 - Roof harness earth
X456 - Solar panel
X457 - Earth (Auto-Guide)
X458 - Cab transmission harness/pillar harness junction
X459 - Linkage lifting switch on fender
X460 - Linkage lowering switch on fender
X461 - Pillar harness/TECU harness junction
X462 - Supply indicator light for power socket on pillar
X463 - Earth (Isobus)
X464 - Pillar harness/armrest harness junction
X465 - Battery positive terminal contact
X466 - Active suspended cab Autotronic 5
X467 - Right-hand electric rear-view mirror
X468 - Left-hand electric rear-view mirror
X469 - Additional fan connection
X470 - Operator presence in seat switch
X471 - Suspended cab harness connection

Identification of harnesses
FAI200 - Engine harness
FAI201 - Front headlights harness
FAI202 - Suspended front axle harness
FAI203 - Transmission harness
FAI204 - Cab/platform linkage external harness
FAI205 - Electrohydraulic valves harness
FAI206 - Transmission harness — PTO
FAI207 - Front Dual Control harness
FAI208 - Linkage with Dual Control and TIC harness
FAI209 - Instrument panel harness
FAI210 - Cab transmission harness
FAI211 - Cab linkage harness
FAI212 - Lighting harness
FAI213 - Cab interior lighting harness
FAI214 - Armrest harness
FAI215 - Pillar harness
FAI216 - Diagnostics connector harness
FAI217 - Datatronic 3 harness
FAI218 - Fieldstar harness
FAI219 - Cab interior power socket harness
FAI220 - BOC harness — safety switch
FAI221 - Automatic air conditioning harness — instrument panel
FAI222 - Autotronic 5 ParkLock/suspended front axle harness
FAI223 - Roof harness
FAI224 - Hand rail lighting harness
FAI225 - Electric rear-view mirror harness
FAI226 - Roof/external harness
FAI227 - Automatic air conditioning harness - roof
FAI228 - Number plate lighting harness
FAI229 - Xenon light adapter harness
FAI230 - GSPTO harness
FAI231 - Transmission harness — ParkLock
FAI232 - Radio harness
FAI235 - Front accessory connection socket harness
FAI236 - Start-up harness
FAI237 - +12 APC fuse box harness
FAI238 - +12 APC instrument panel harness
FAI239 - Permanent +12 V supply harness
FAI240 - +12 V permanent fuse box harness
FAI241 - Automatic air conditioning adapter harness
FAI242 - Main beams on hand rail adapter harness
FAI243 - Circuit breaker harness
FAI244 - Linkage external controls extension harness
FAI245 - Left-hand linkage external controls harness
FAI246 - Right-hand linkage external controls harness
FAI247 - PTO shunt harness
FAI248 - Linkage external controls harness
FAI249 - Suspended front axle harness
FAI250 - Engine harness
FAI251 - Parking brake harness
FAI252 - +12 V battery harness
FAI253 - Hand rail harness
FAI254 - Windscreen wiper harness
FAI255 - Windscreen wiper harness
FAI256 - High-visibility roof heating harness
FAI257 - High-visibility roof heating harness
FAI258 - Roof earth harness
FAI260 - Cooling unit harness
FAI261 - Isobus harness
FAI262 - Auto-Guide engine harness
FAI263 - Auto-Guide cab adapter harness
FAI265 - Pneumatic brake harness
FAI267 - Console harness
FAI268 - Front function harness
FAI271 - Cab electric rear-view mirror harness
FAI272 - Active suspended cab harness

FAI273 - Front linkage harness
FAI274 - Rear right-hand lighting harness
FAI275 - Trailer connector harness
FAI276 - Rear left-hand lighting harness
FAI280 - Negative battery harness
FAI281 - Negative battery harness
FAI282 - Negative battery harness
FAI283 - TopDock harness
FAIxxx - Non-Isobus tool connector harness
FAIxxx - Non-Isobus implement connector controller harness
FAIxxx - Additional fan harness

B.2 Fuse box supply with circuit breaker

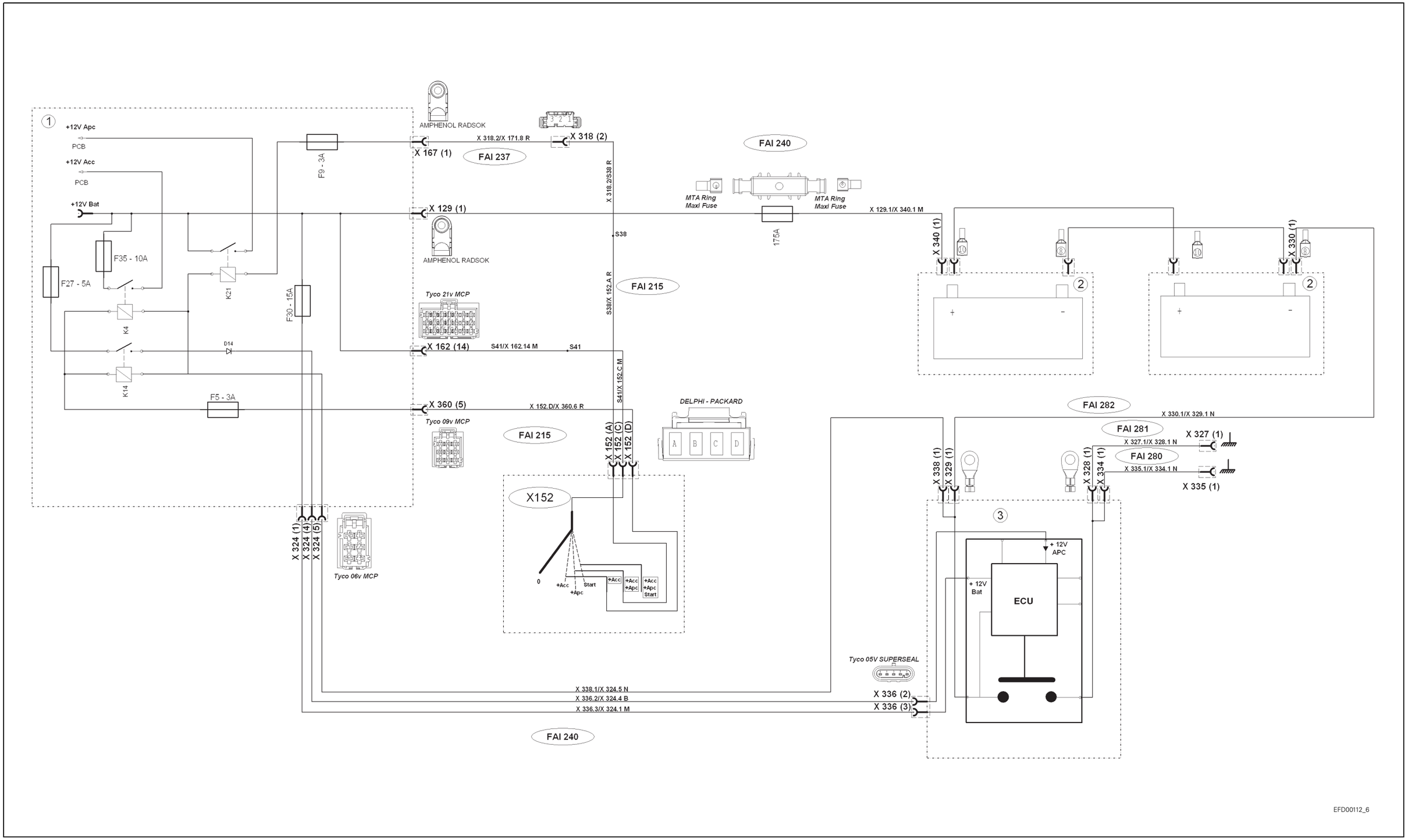

Fig. 2

B.3 Autotronic 4 electrical power supply

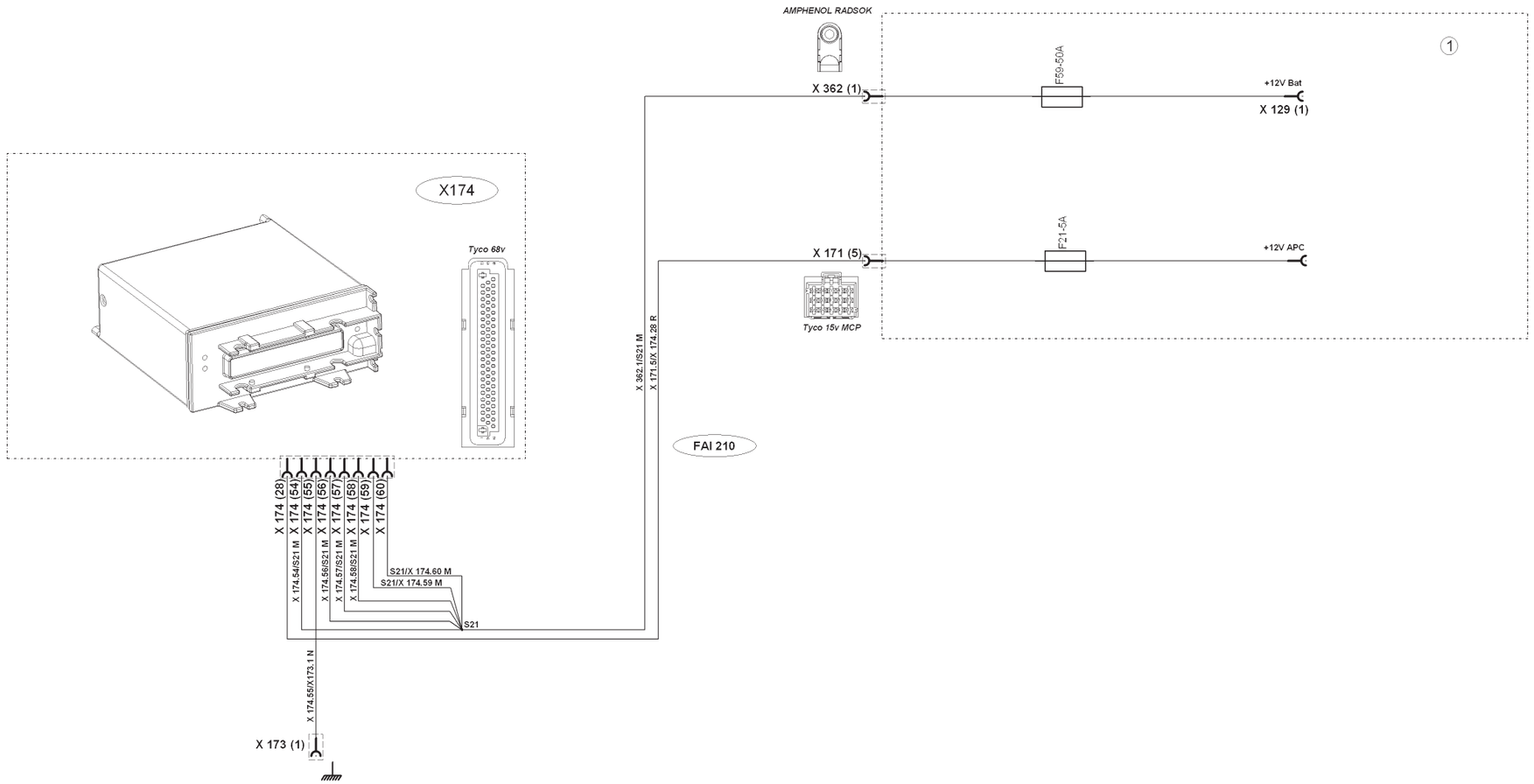

Fig. 3

B.4 Autotronic 5 linkage electrical power supply

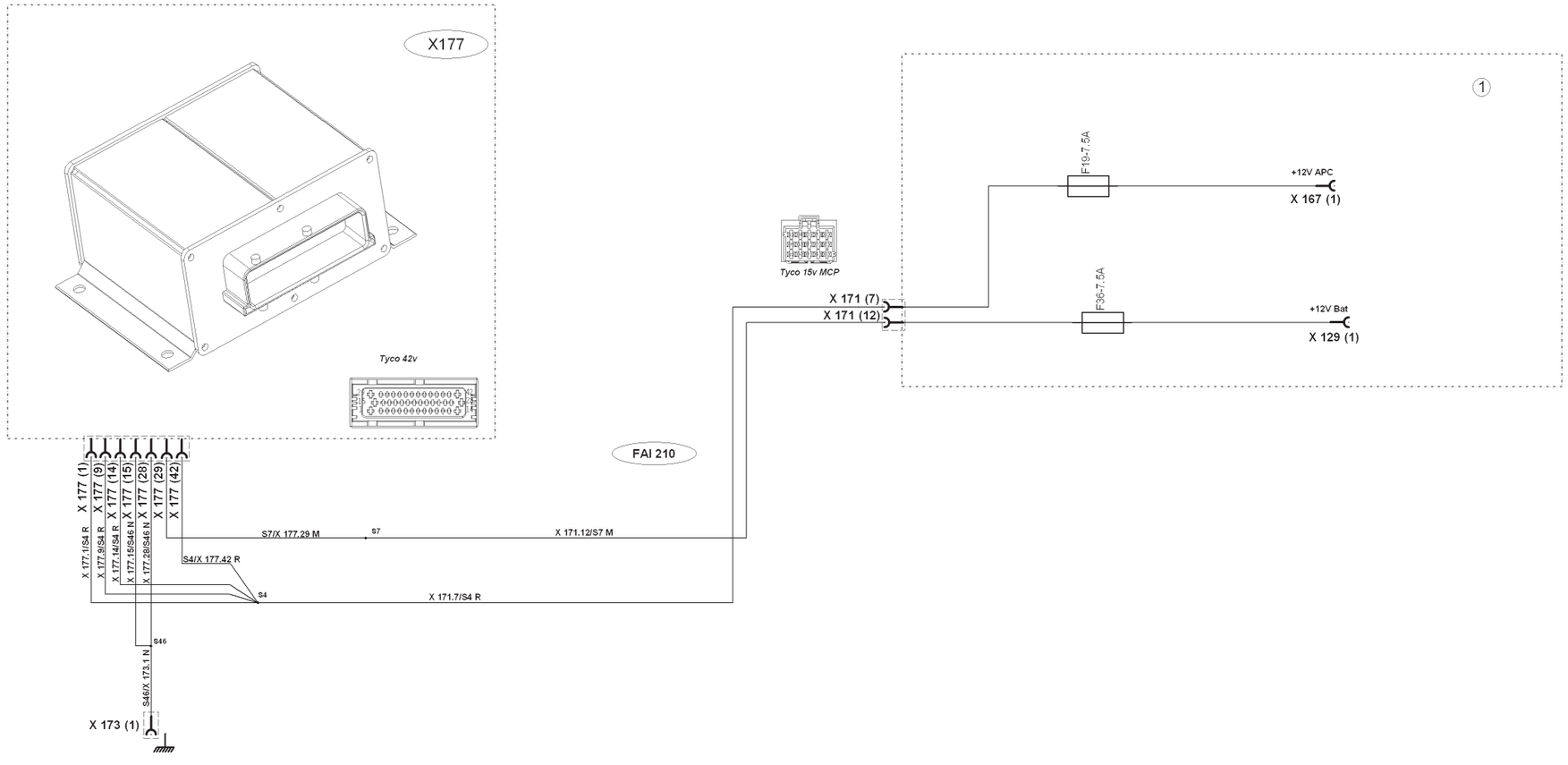

Fig. 4

B.5 Autotronic 5 ParkLock/suspended front axle electrical power supply

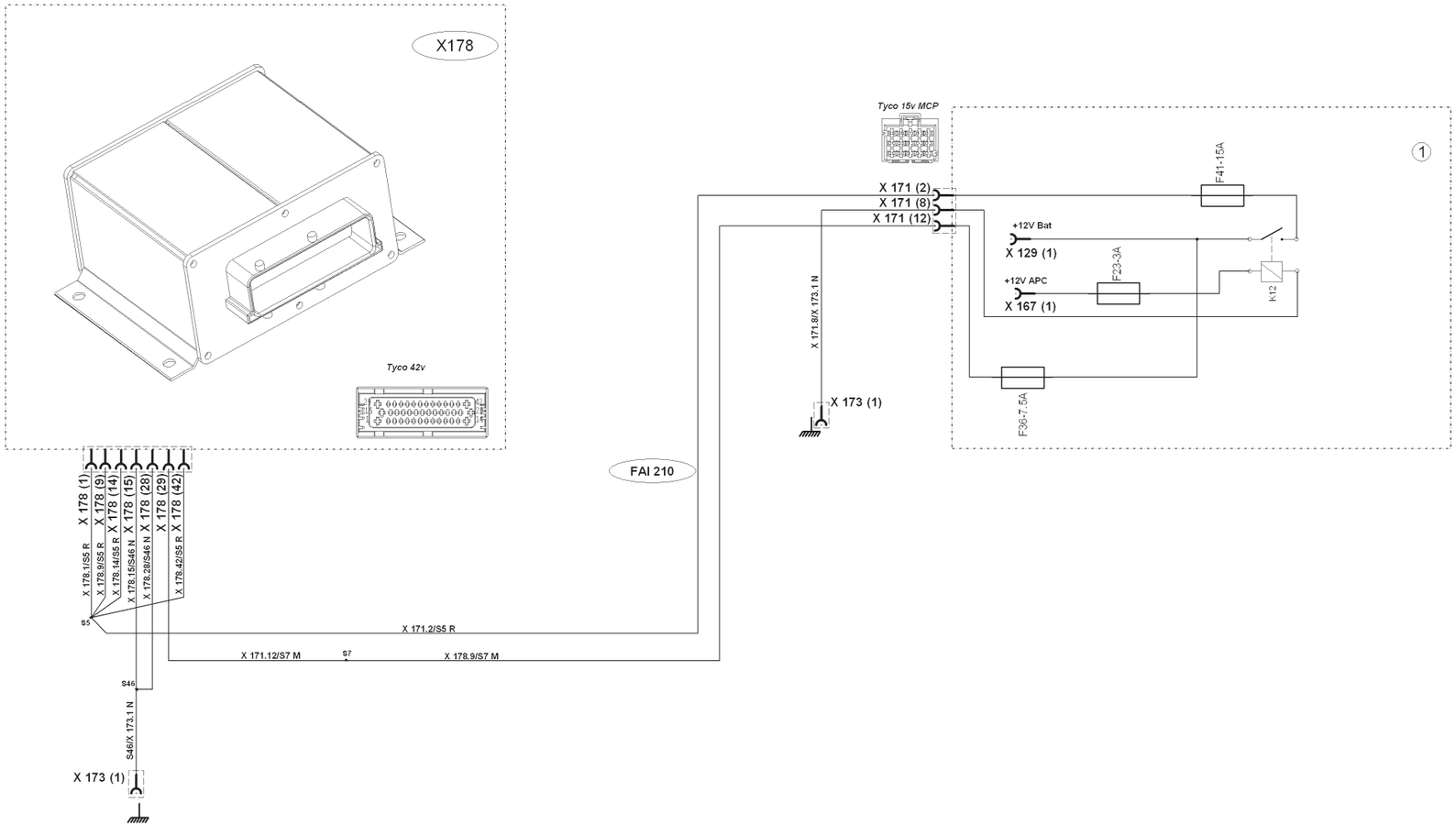

Fig. 5

B.6 DCC3 instrument panel electrical power supply

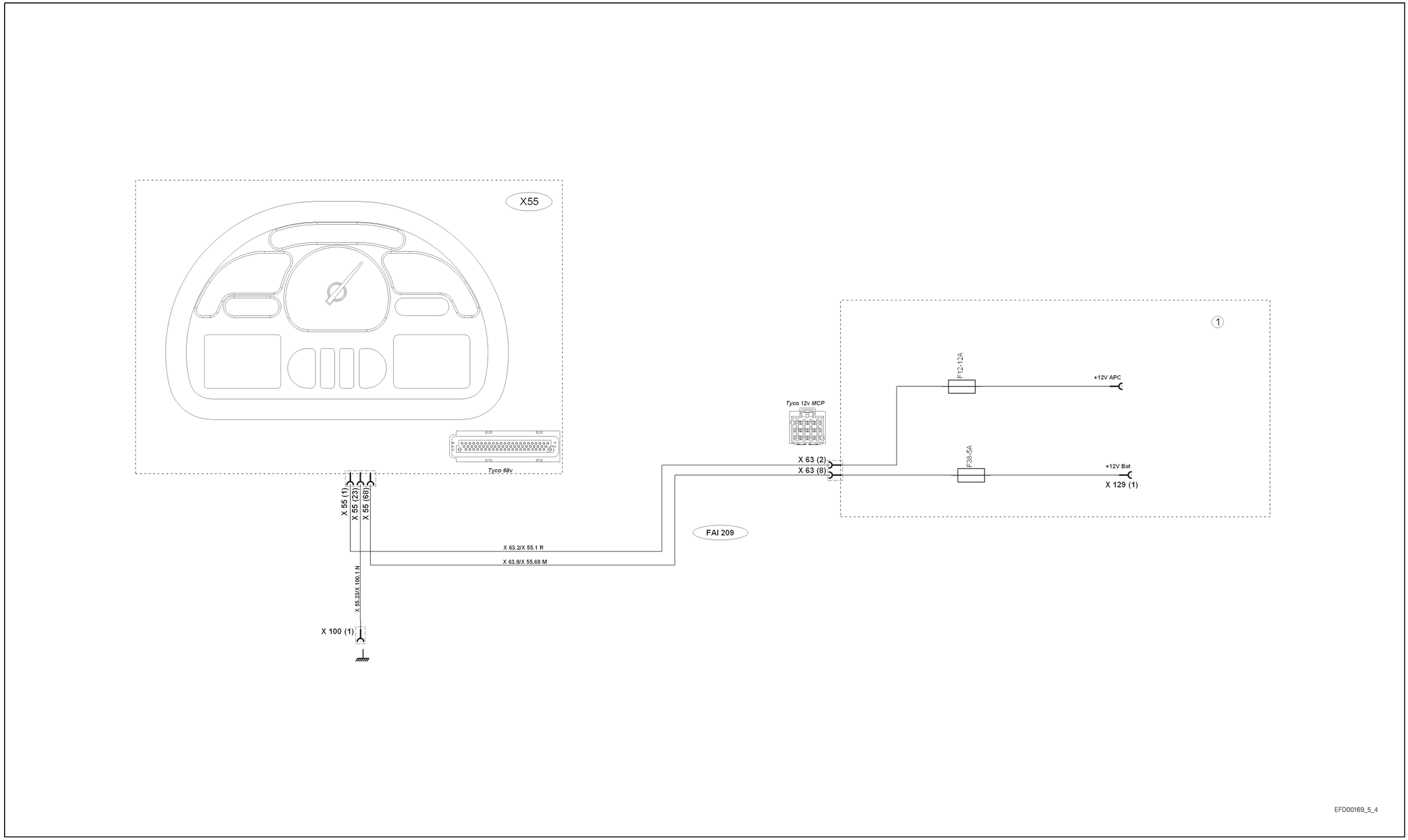

Fig. 6

B.7 Autotronic 5 armrest electrical power supply

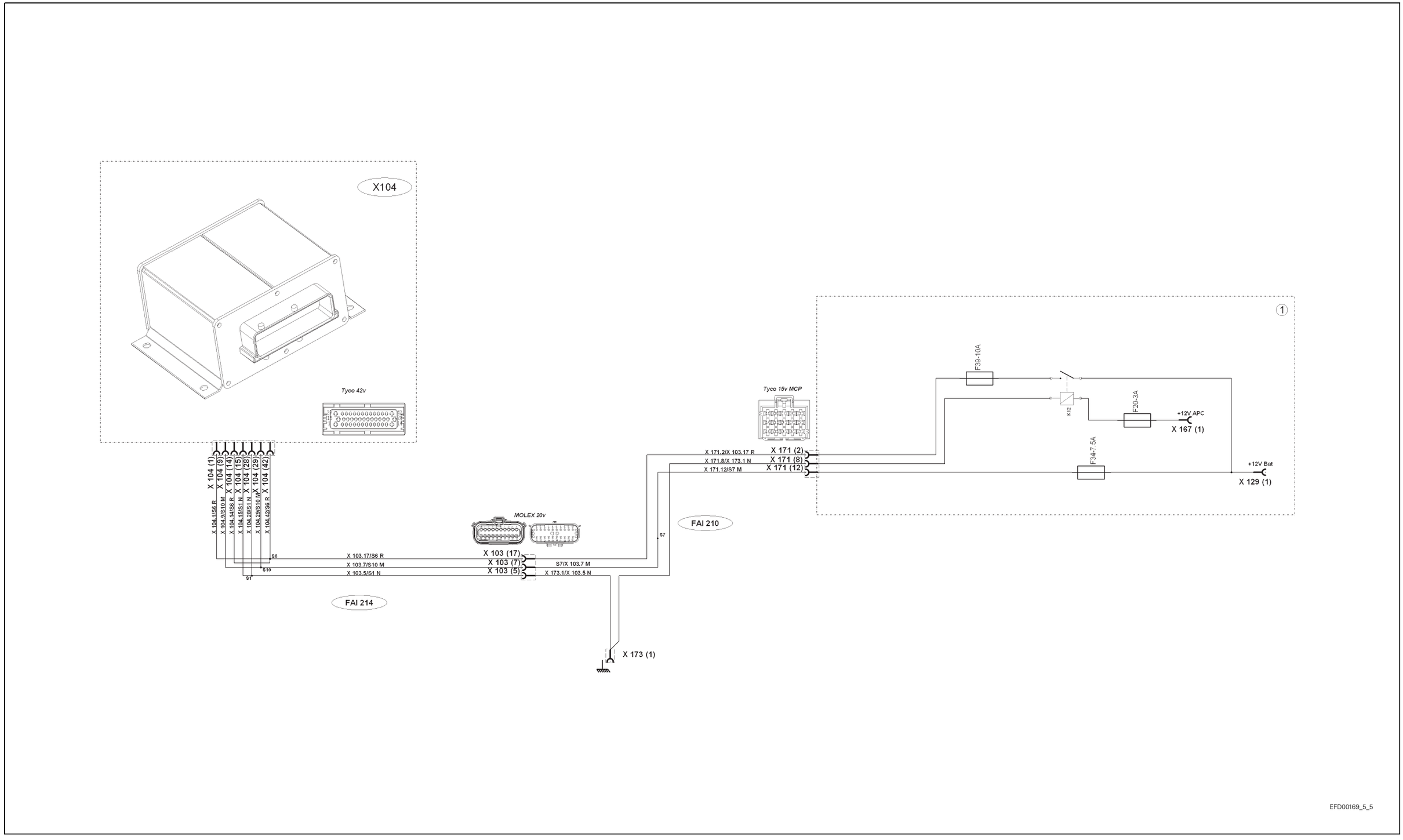

Fig. 7

B.8 Autotronic 5 active suspended cab electrical power supply

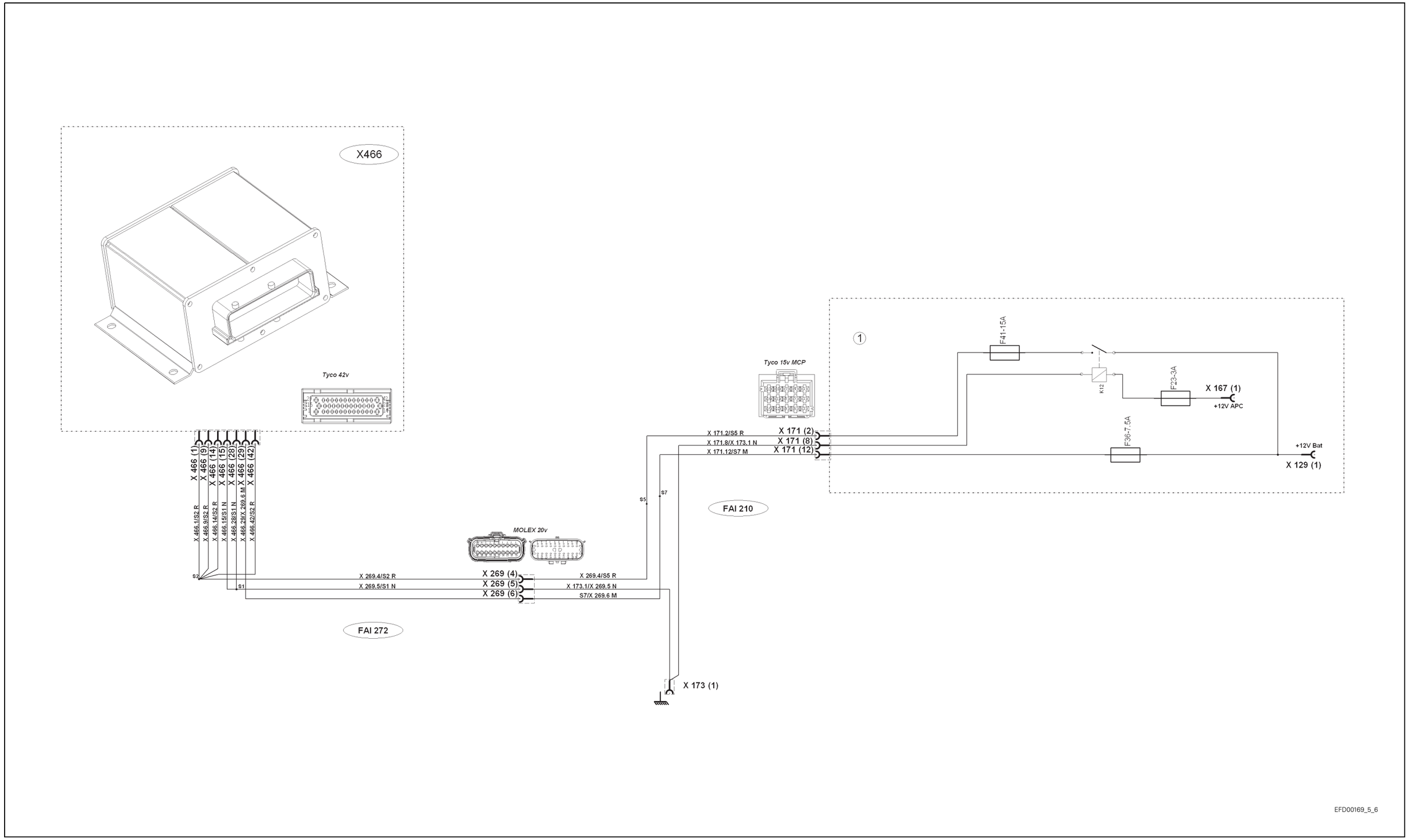

Fig. 8

B.9 Sisu EEM electronic unit electrical power supply

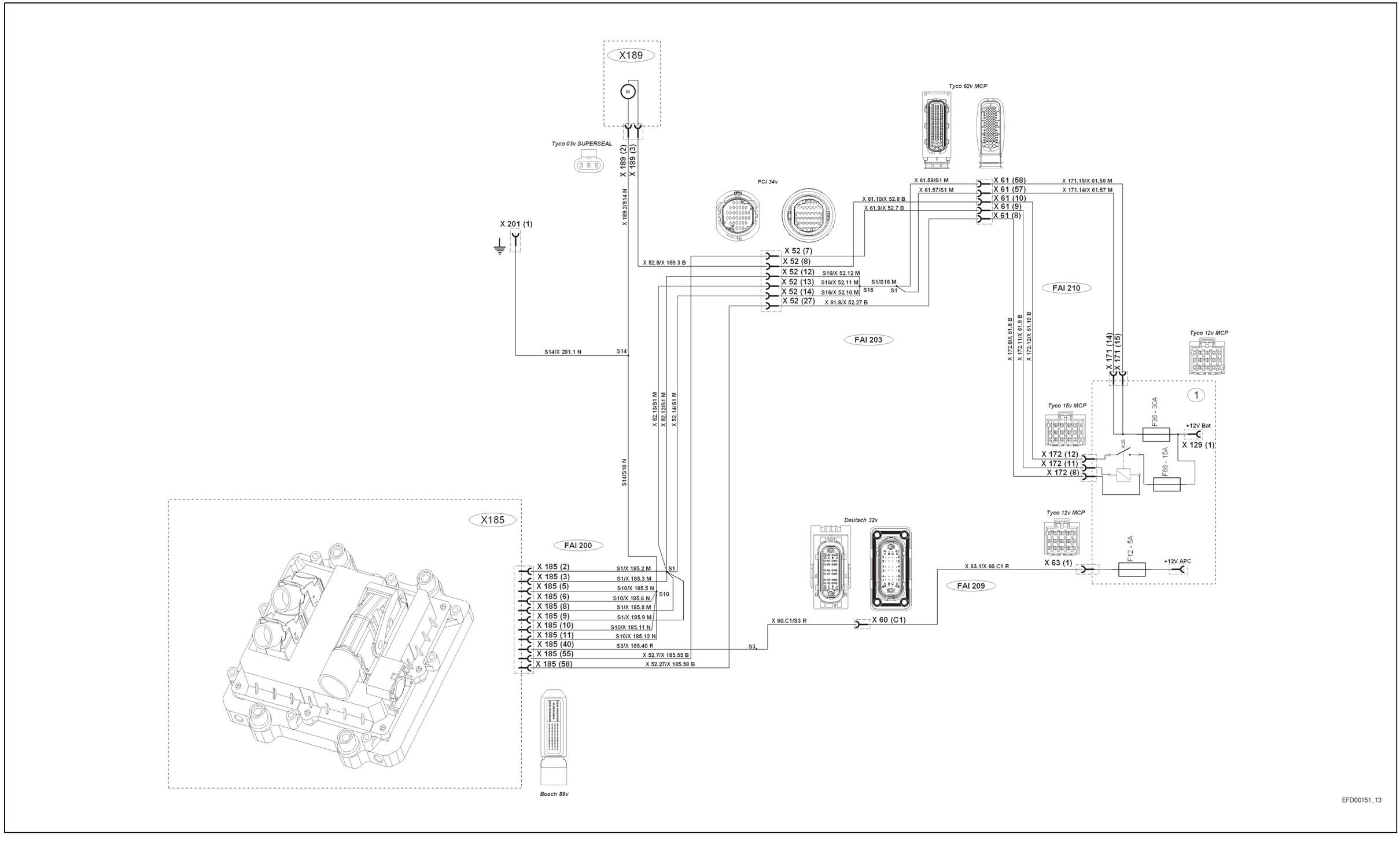

Fig. 9

B.10 Automatic air-conditioning unit electrical power supply

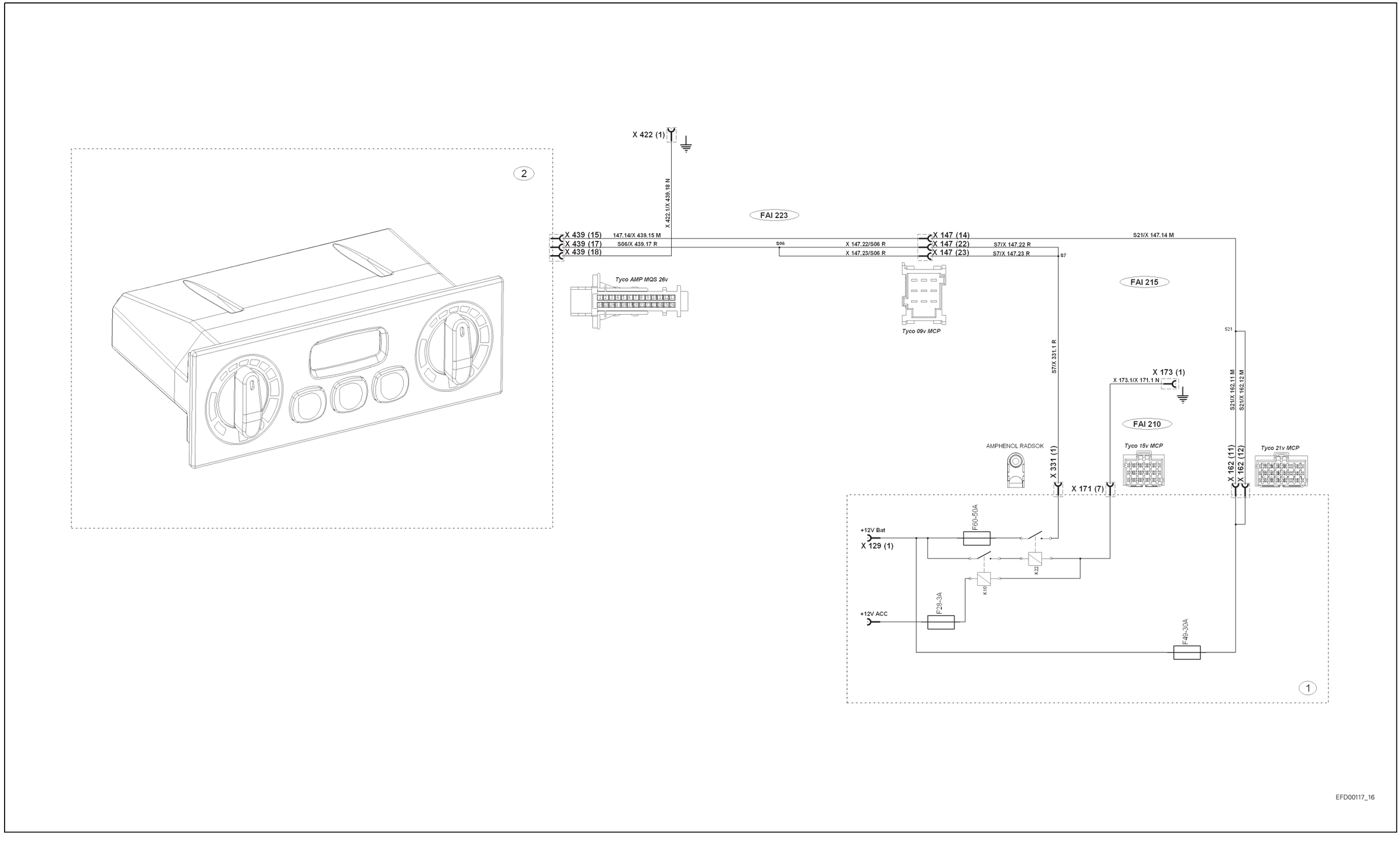

Fig. 10

B.11 Diagnostics connector electrical power supply

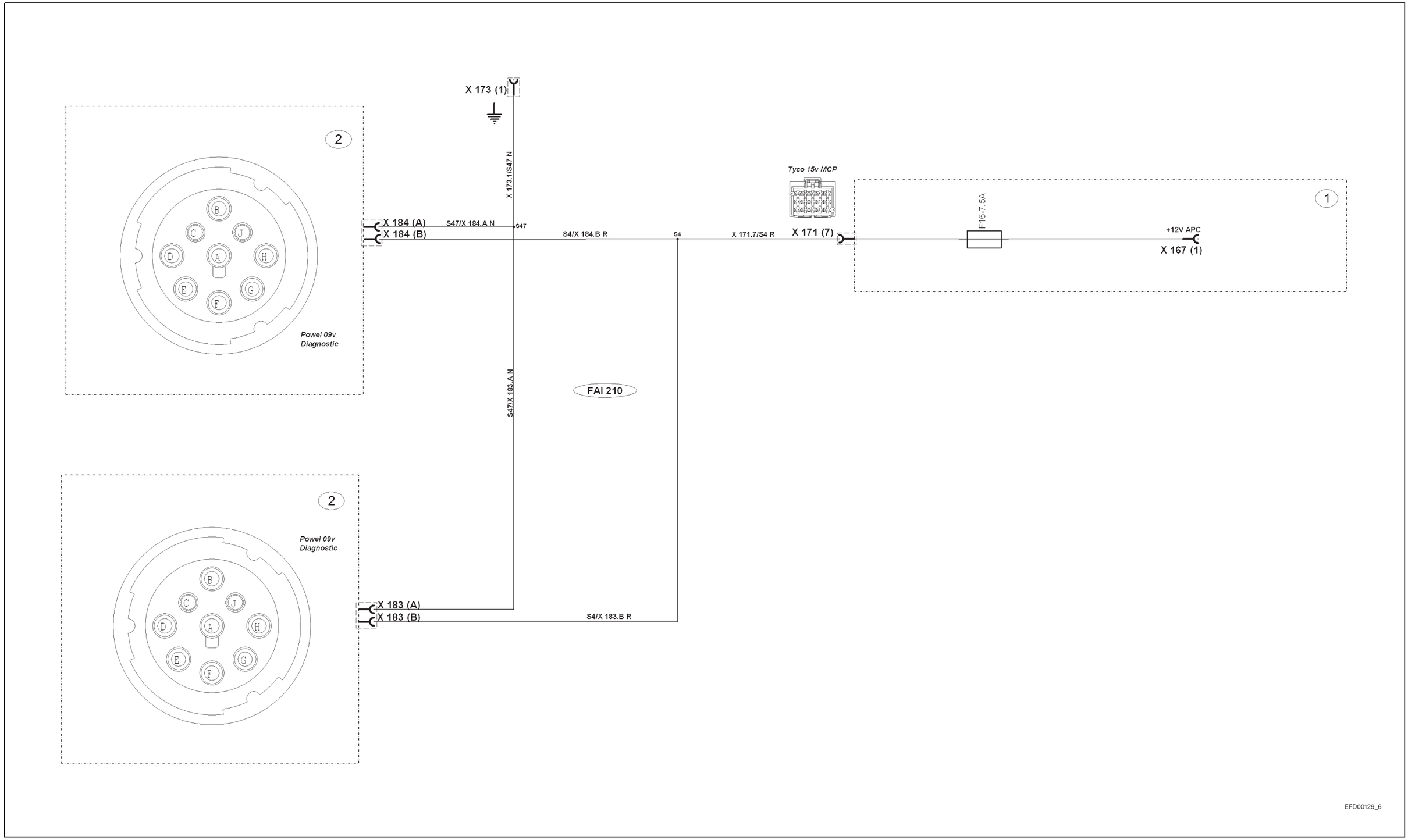

Fig. 11

B.12 Tractor CAN network

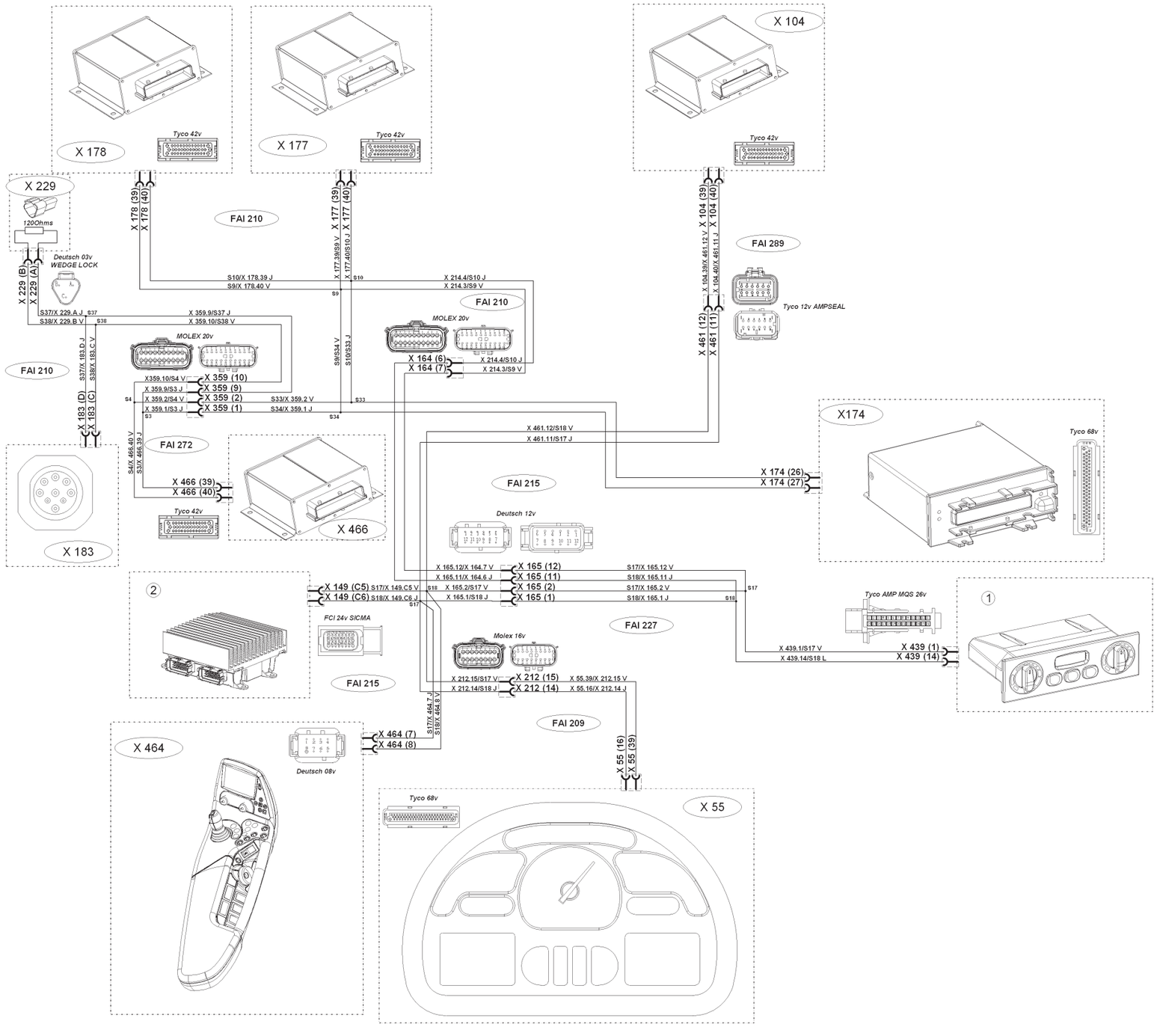

Fig. 12

B.13 Engine CAN network

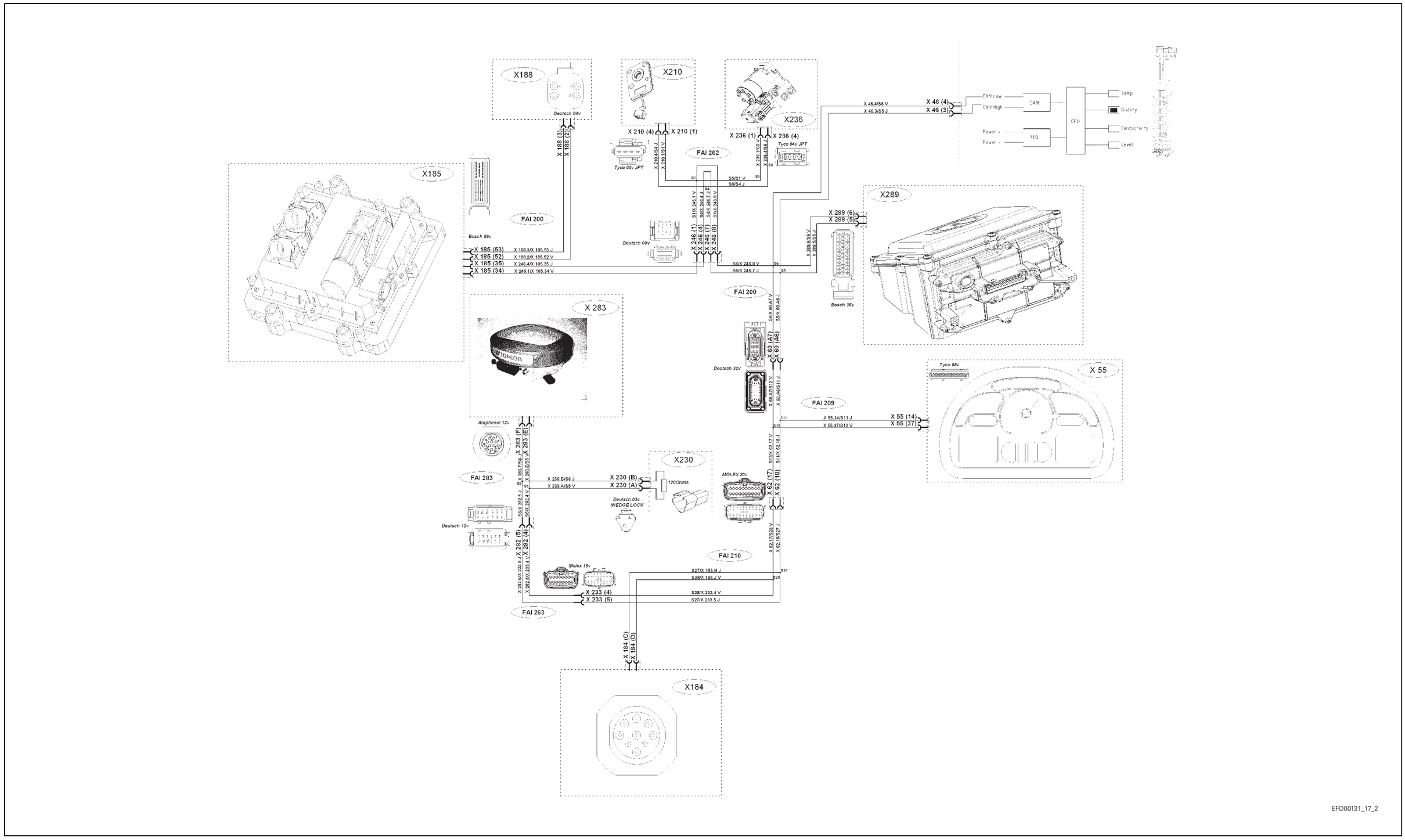

Fig. 13

B.14 Linkage CAN network

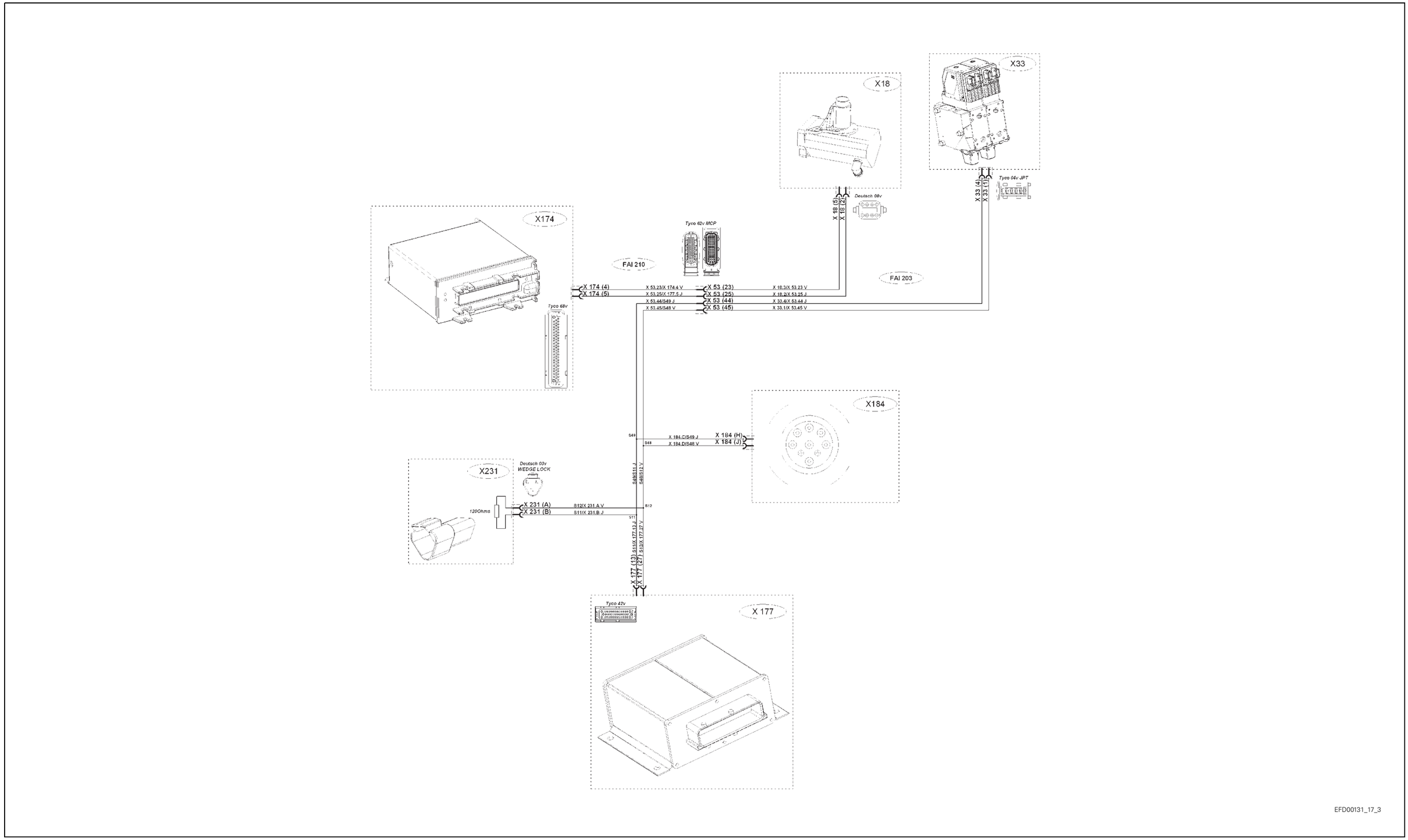

Fig. 14

B.15 Isobus CAN network

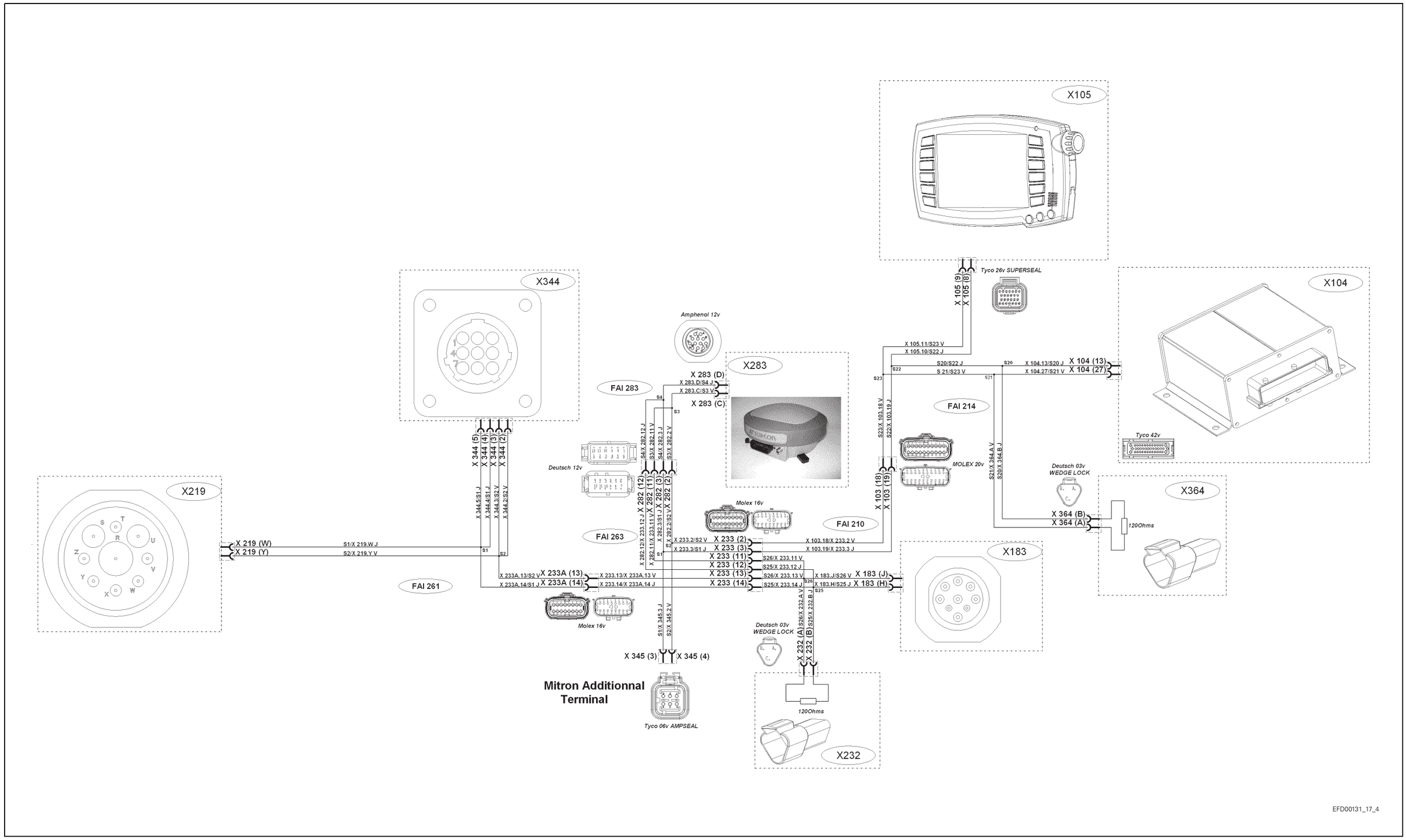

Fig. 15

B.16 Auto-Guide

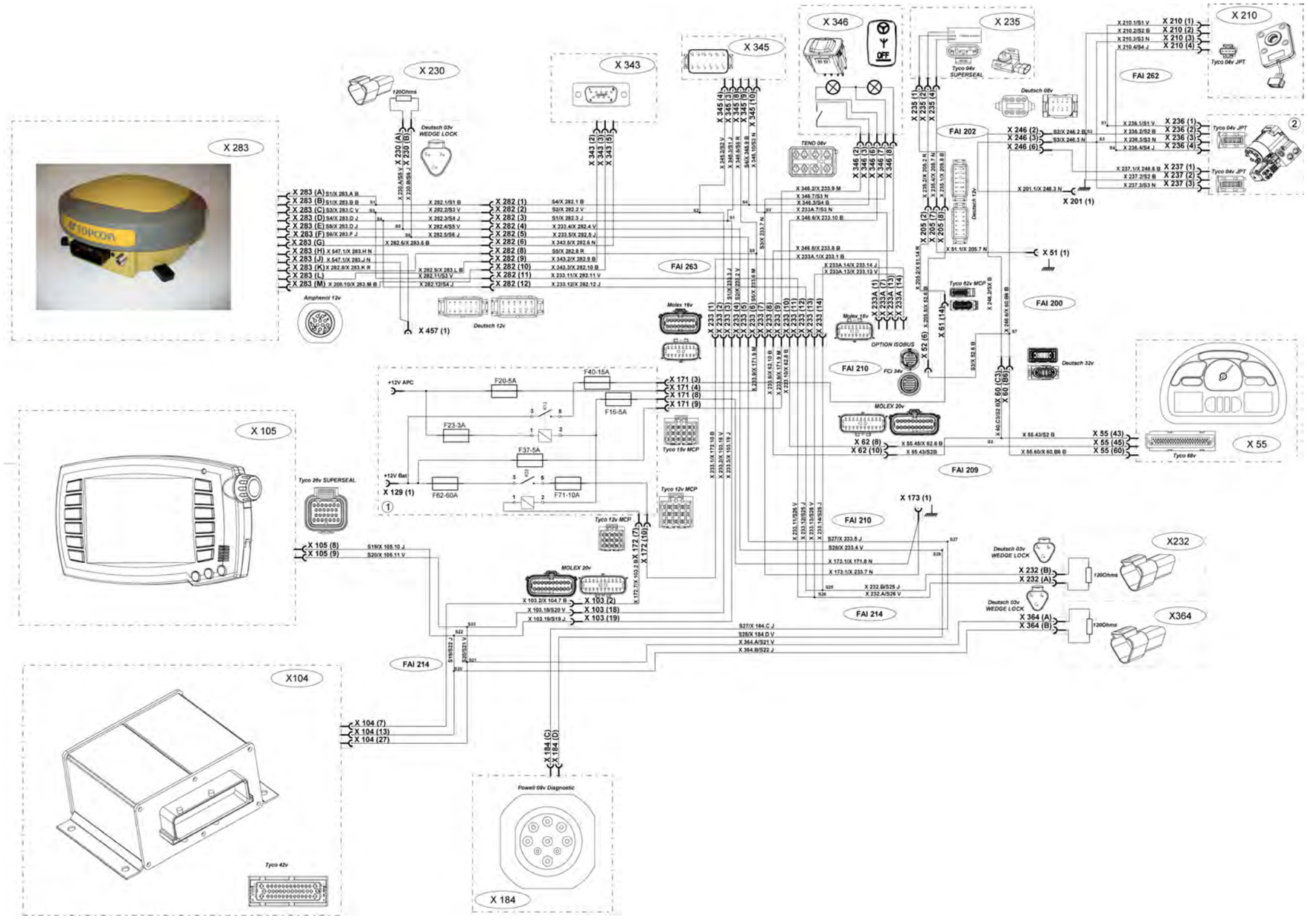

Fig. 16

B.17 Fast steering

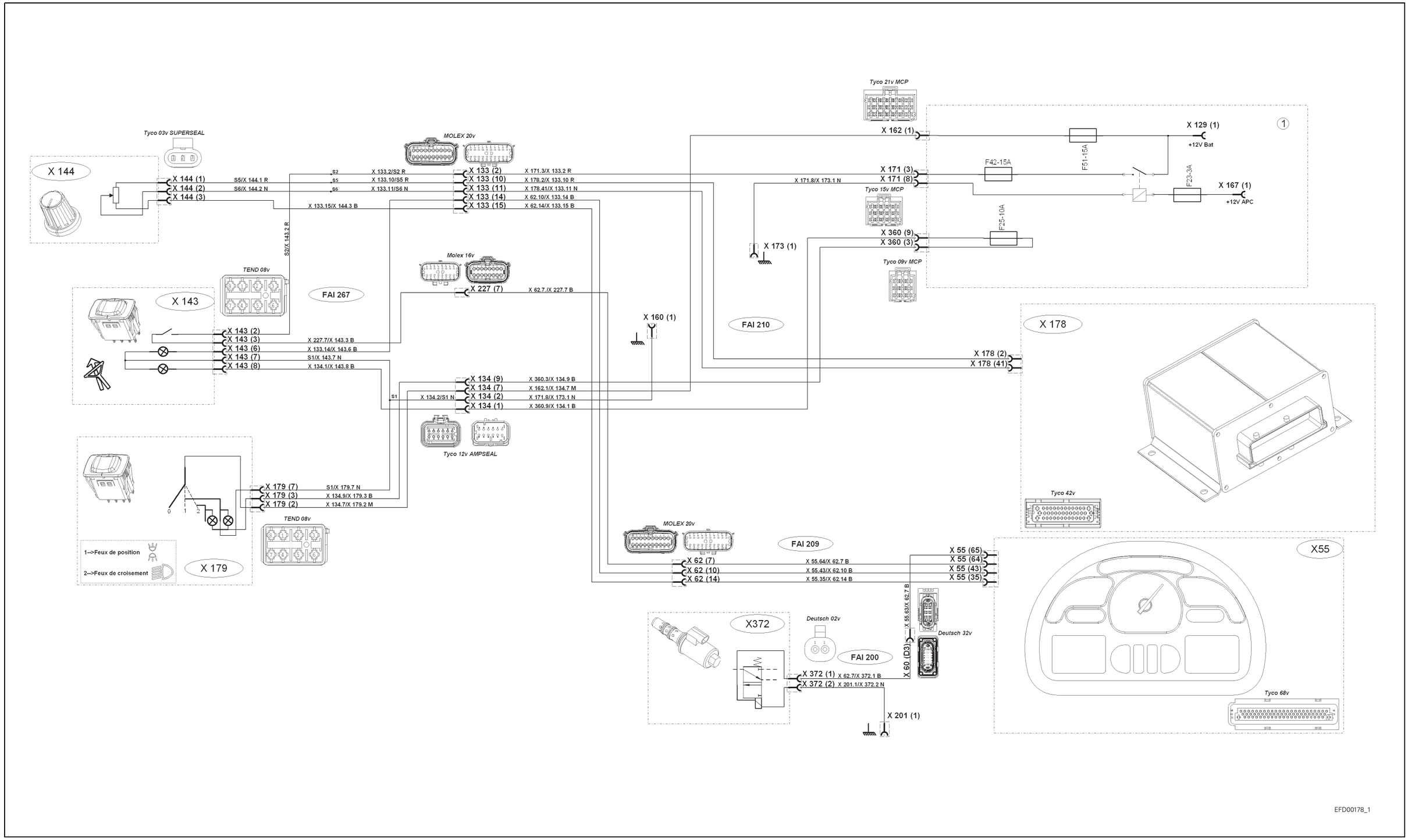

Fig. 17

8D13

Steering unit - Layout of components

TABLE OF CONTENTS

A. Layout of steering unit components

Priority valve

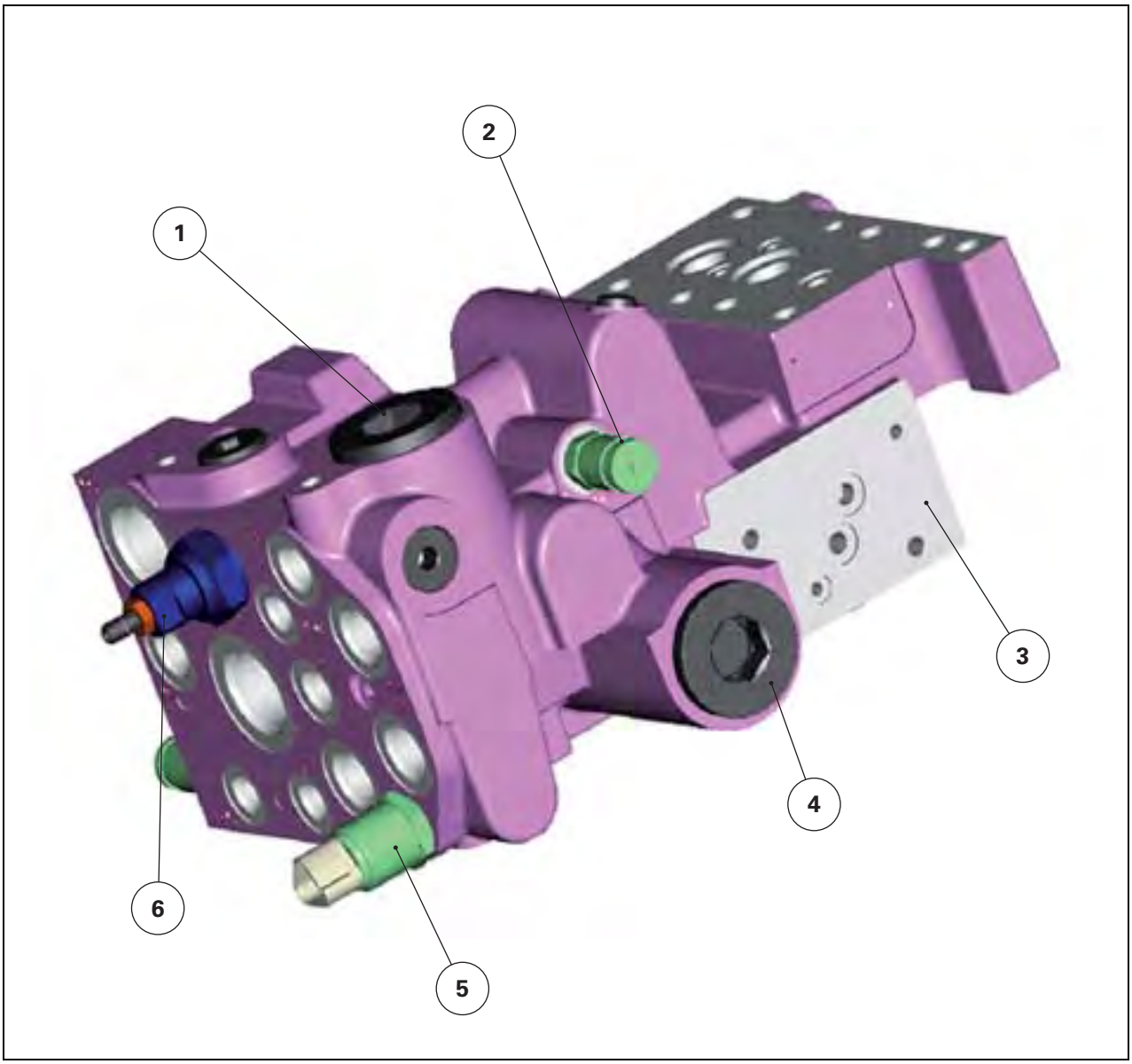

I011827

Fig. 1

(1) 2/2 boost valve
(2) P_PLS steering
(3) P_PLS PV
(4) 3/2 priority valve
(5) Pressure sensor
(6) Pressure relief valve

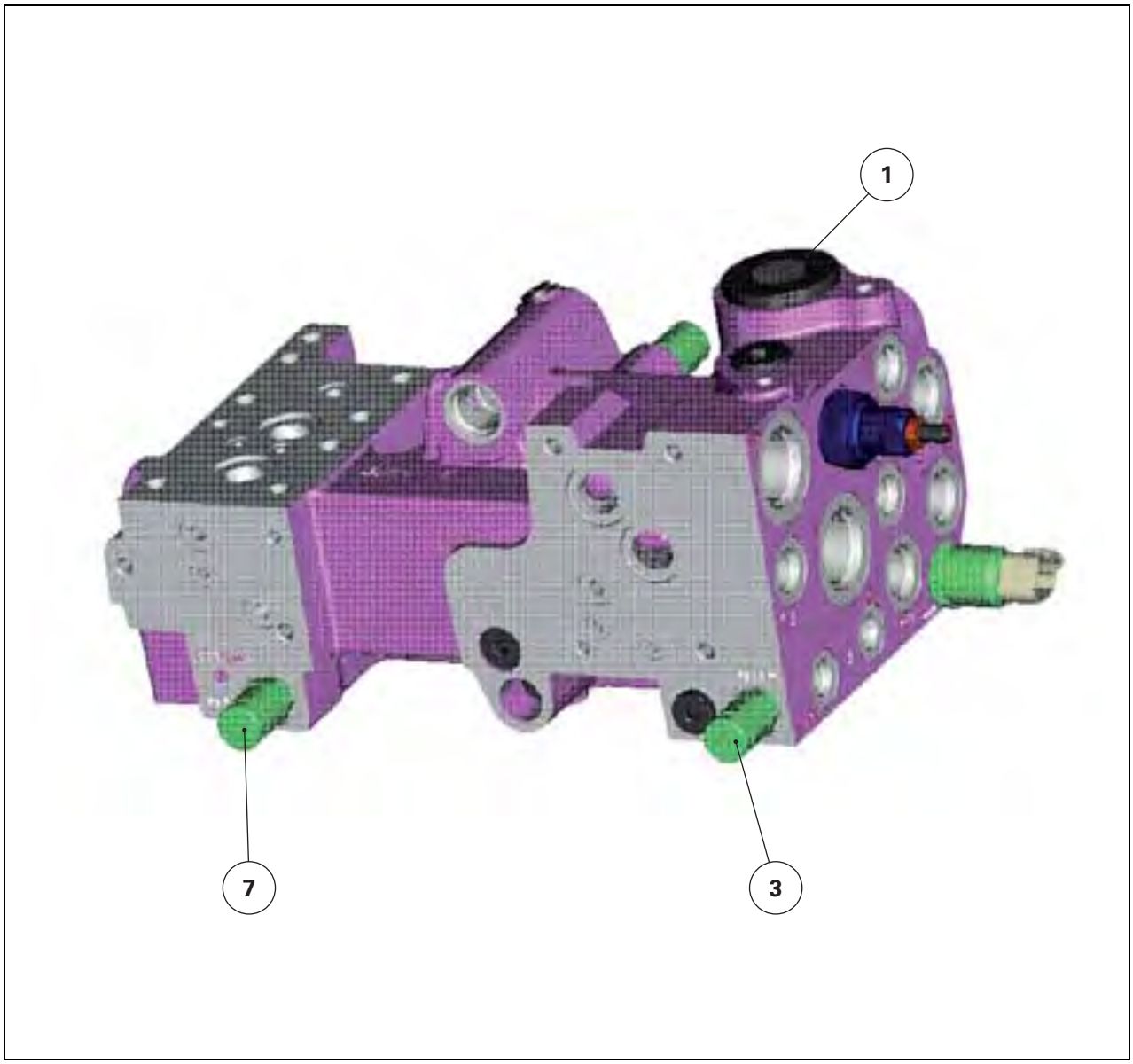

I011828

Fig. 2

(1) 2/2 boost valve
(3) P_PLS PV
(7) P_PP PV

Steering unit

Standard Orbitrol

I011829 Fig. 3

Electrohydraulic Orbitrol

I011830 Fig. 4

Steering system

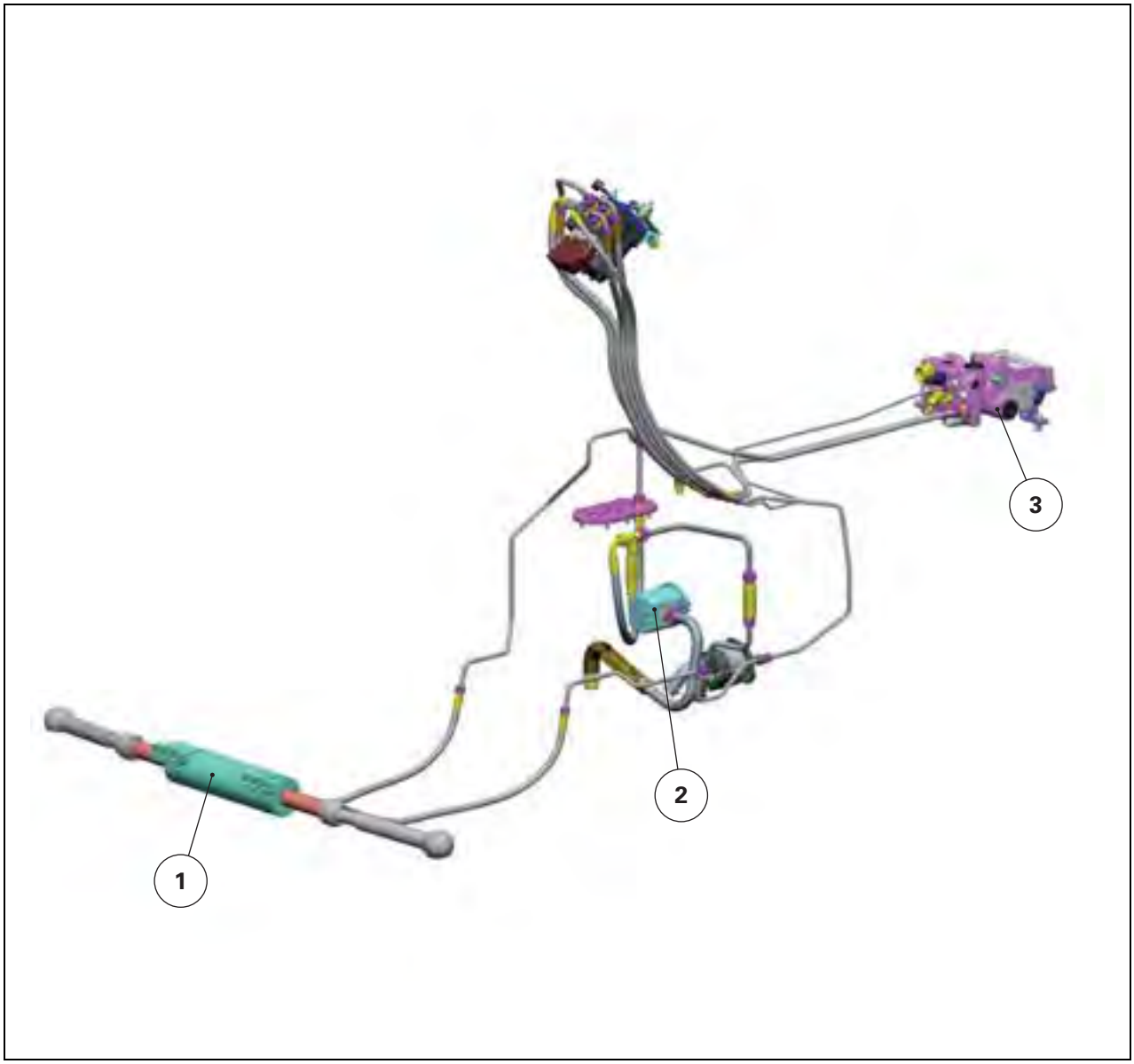

I011831

Fig. 5

(1) Steering ram
(2) Steering pump
(3) Priority valve

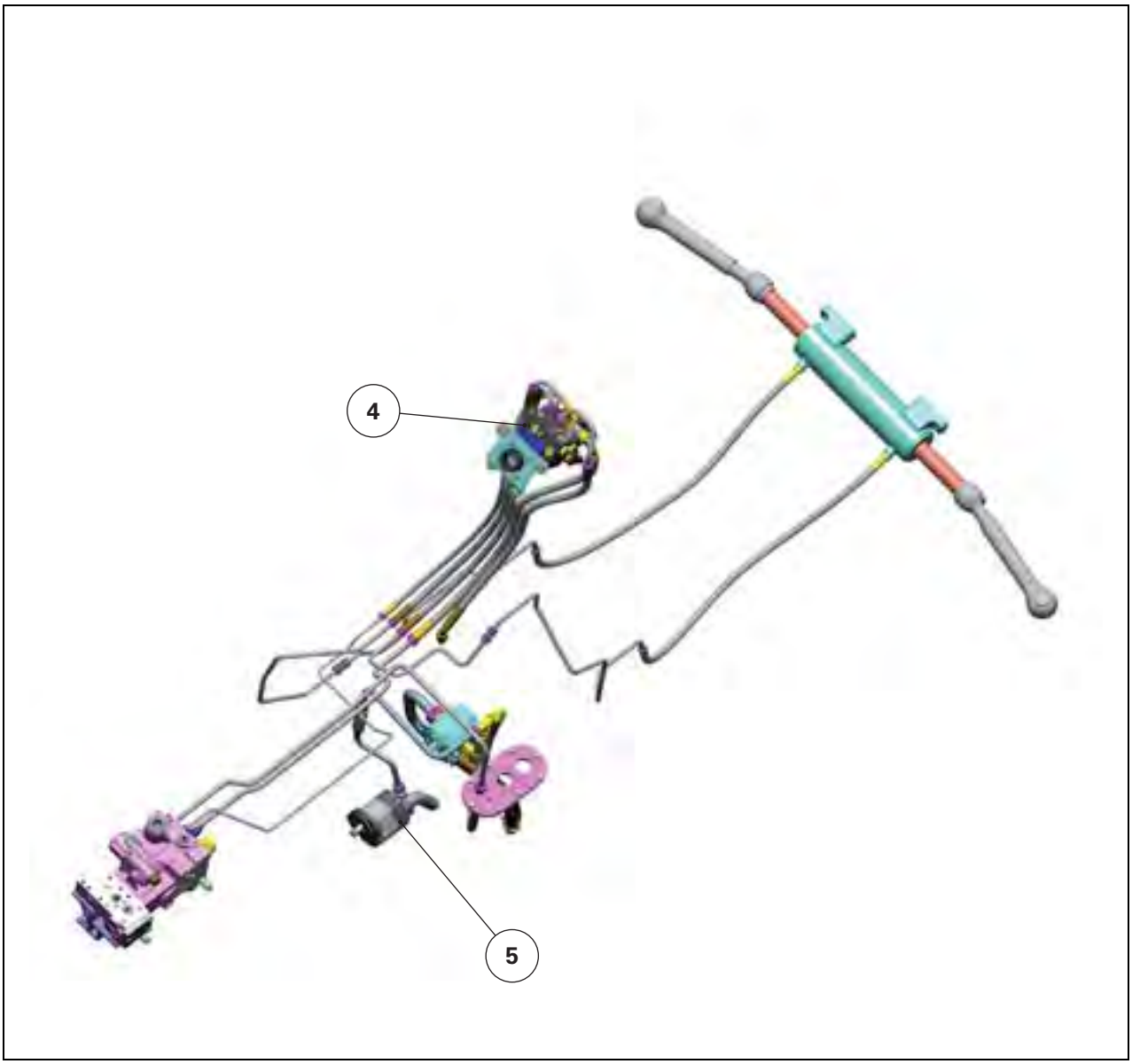

I011832

Fig. 6

(4) Orbitrol

(5) Steering standby pump

8D14

Steering unit - Tests and diagnostics

TABLE OF CONTENTS

A. Preliminary steps

The first points to check before carrying out the test are:

- check that the hydraulic oil level (A) (Fig. 1) is correct
- check that the last service inspections have been complied with

Before starting the tests, run the engine and operate a hydraulic function to reach a hydraulic operating temperature of 60°C. To assist the rise in temperature, connect a flowmeter to an auxiliary spool valve and limit the flowmeter flow rate.

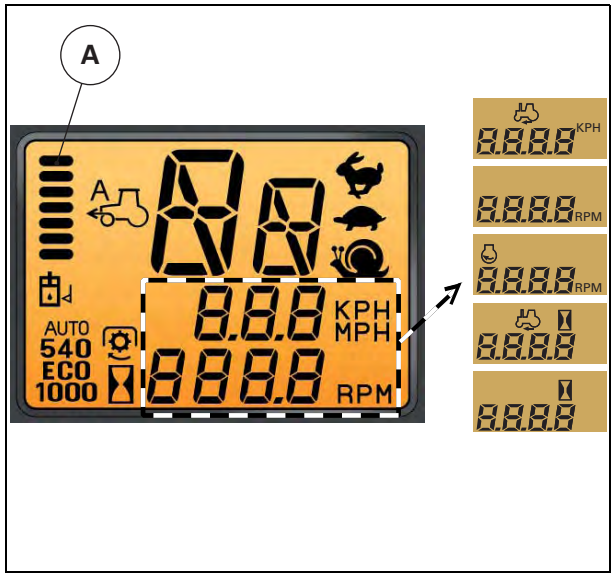

I009075

Fig. 1

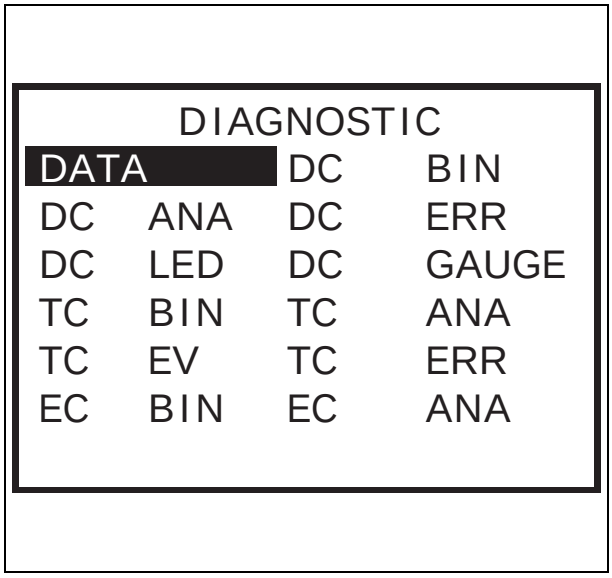

I009073 Fig. 2

NOTE: *To quickly read off the hydraulic oil temperature, it is necessary to return to diagnostic mode on the instrument panel by pressing the top arrow located on the steering column for 7 seconds. The screen (Fig. 2) is displayed. Using the navigation control on the steering wheel, enter DATA mode and then scroll through until "Hyd-Temp" appears (Fig. 3).*

Reminder:

During the tests, select pressure gauges, hoses and unions of sufficient capacity and strength for the checks to be carried out.

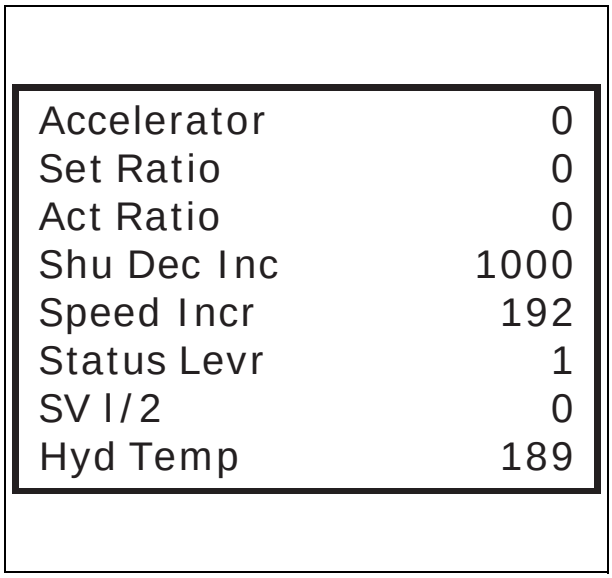

I009074 Fig. 3

B. Checks and tests

Checking the pressure at the outlet of the priority block

Parameters required:

- hydraulic oil temperature at 60 °C
- engine idle speed at 800 rpm

Tool used:

- EDT

Method

(1) Boost priority valve
(2) Main priority valve
(3) To steering unit
(4) From steering pump + standby pump
(5) Pressure sensor 0 - 250 bar

1. Tractor running at 800 rpm, with EDT tool to hand.

2. Without operating the wheels, the EDT pressure reading should be:
20 bar < P < 40 bar

3. When turning the wheels full lock to the right and left-hand stops, the EDT pressure reading should be:
160 bar < P < 200 bar

NOTE: *The sensor (5), which reads the pressure on the EDT, is fitted at the outlet of the priority block.*

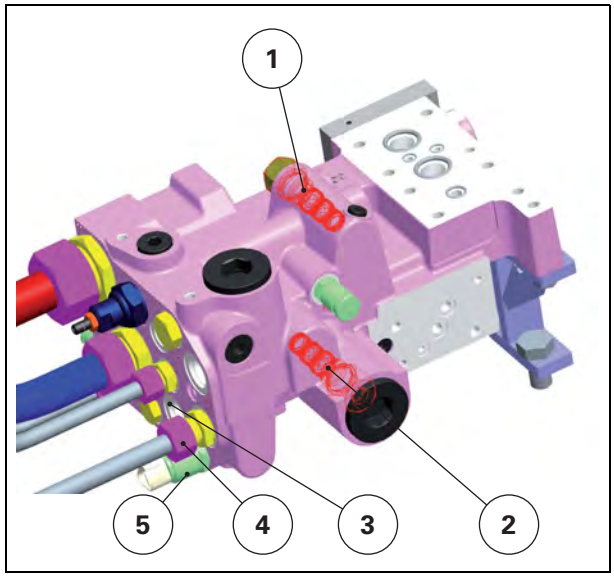

I009321 Fig. 4

Checking the maximum pressure of the steering system

Parameters required:

- hydraulic oil temperature at 60 °C
- engine idle speed at 800 rpm

Tools used:

- pressure gauge, minimum value of 250 bar
- T connector

Method

1. Connect a T connector between the steering ram and one of the ram supply hoses.
2. Connect the pressure gauge.
3. Start the pressure gauge.
4. Turn the steering wheel to full lock.
5. The maximum pressure reading should be:
   P = 160 bar +/- 5 bar

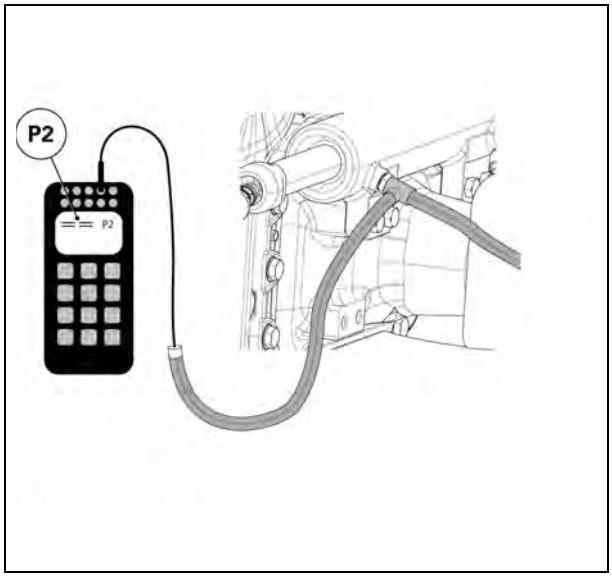

I009322 Fig. 5

Steering unit pump test

Parameters required:

- hydraulic oil temperature at 60 °C
- engine idle speed at 800 rpm

Method

1. Using the steering wheel, place the wheels in the right or left-hand full lock position.
2. Mark the position of the steering wheel.
3. Turn the steering wheel to full lock on the other side and count the number of turns it takes to reach this point.
4. According to the full lock stop settings, the number of steering wheel turns is between:
   3.5 turns < N < 4.5 turns

Checking the steering boost function

Parameters required:

- hydraulic oil temperature at 60 °C
- engine idle speed at 800 rpm

Tool used:

- pressure gauge, minimum value of 250 bar

Method

1. Connect a pressure gauge to the P_PLS PV pressure connector.
2. With the tractor running at idle speed, turn the steering wheel very quickly to operate the boost function.
3. Normally, a pressure peak is displayed on the pressure gauge.

NOTE: *Activation of the boost function causes the plate of the variable displacement pump to tilt, which loads the engine.*
Operation of the steering boost function can be heard as an engine noise.
The boost function is physically inactive above approximately1200 rpm, as the steering pump flow rate alone is sufficient.

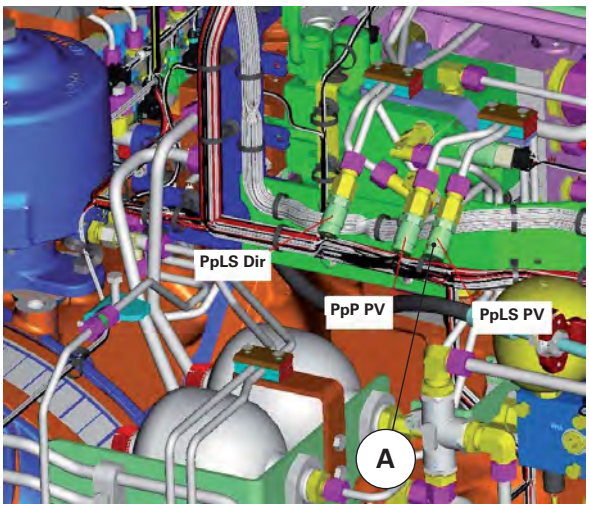

I009083 Fig. 6

Checking the LS pressure of the steering system

Parameters required:

- hydraulic oil temperature at 60 °C
- engine running at an idle speed of 800 rpm

Tool used:

- pressure gauge, minimum value of 250 bar

Method

1. Connect a pressure gauge to the P_PLS DIR steering pressure connector.

2. Turn the steering wheel until the wheels are at full lock. The pressure reading is:
P = 160 bar +/- 5 bar
This is the setting value of the steering unit pressure relief valve.

3. If the value obtained is very different from the specifications, it is recommended that an LS dynamic flow rate test be carried out.

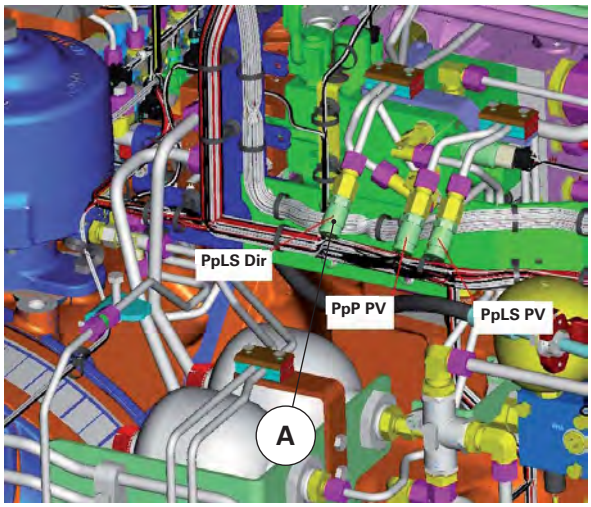

I009323 Fig. 7

Checking the LS dynamic flow rate

Parameters required:

- hydraulic oil temperature at 60 °C
- engine idle speed at 800 rpm

Tool used:

- graduated test container

Method

4. Loosen the steering unit union (A).

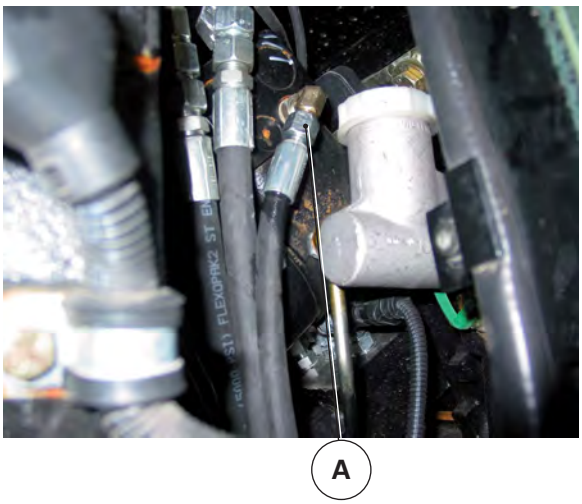

I009324 Fig. 8

5. Fit a graduated test container (B) and position the hose so that the leakage can be measured.

6. With the tractor running at idle speed, measure the quantity of oil after 1 minute.
Q = approx. 2 l/min +/- 0,2 l/min

NOTE: *Do not touch the steering wheel during this operation.*

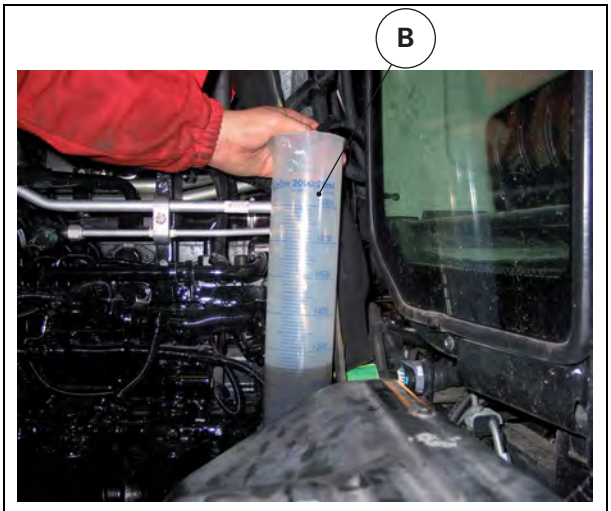

I009325 Fig. 9

Checking the pressure of the steering unit security valves

Parameters required:

- engine stopped

Tools used:

- calibration pump, capacity 300 bar
- pressure gauge

Method

1. Connect a T connector between the steering ram supply hose and the ram.

2. Connect a calibration pump and a pressure gauge to the T connector.

3. With the engine switched off, pump until the security valve opens.

4. Check the pressure reading:
P = 235 bar +/- 5 bar

5. Carry out the same operation to check the security valve on the other side of the ram.

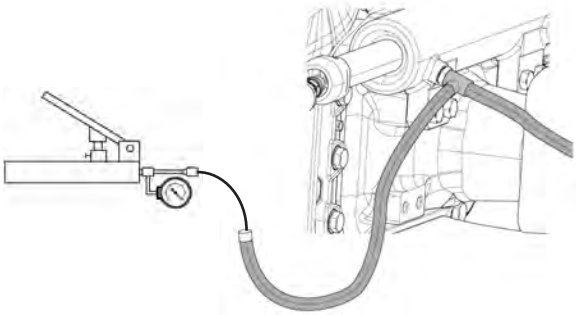

I009326 Fig. 10

Checking the steering system for leaks

Parameters required:

- hydraulic oil temperature at 60 °C
- engine idle speed at 800 rpm

Method

1. Turn the wheels to full lock and apply a torque of 4 Nm to the axis of the steering wheel.

2. The steering wheel must not turn at more than 3 rpm.

3. If the steering wheel turns at more than 3 rpm, disconnect the ram supply pipework, plug the 2 ports and then apply the same torque.
- If the steering wheel turns at less than 3 rpm, there is a leakage from the steering ram.
- If the steering wheel turns at more than 3 rpm, the leakage is from the steering unit.

8D15

Section intentionally left blank

TABLE OF CONTENTS

8D16

Steering unit - Adjustments, bleeding and calibrations

TABLE OF CONTENTS

8D17

Steering unit - Disassembly and reassembly

TABLE OF CONTENTS

A. Orbitrol

Disassembly

1. Remove the rear support from the engine bonnet.
2. Remove the cover (1) from the Orbitrol and high-pressure valve assembly.

I011630

Fig. 1

I011631 Fig. 2

3. Mark and remove all the Orbitrol hoses.

4. Take out the floor mat.

I011632 Fig. 3

5. Disconnect the sensor (2).

I011634 Fig. 4

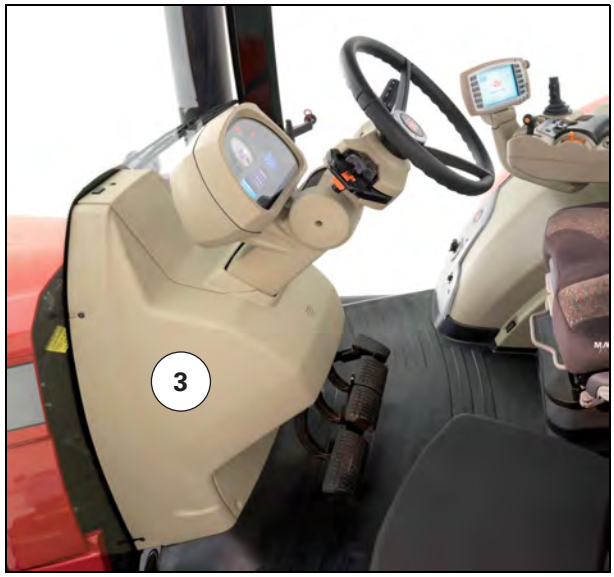

I011649 Fig. 5

6. Remove the instrument panel trim (3).

I011635 Fig. 6

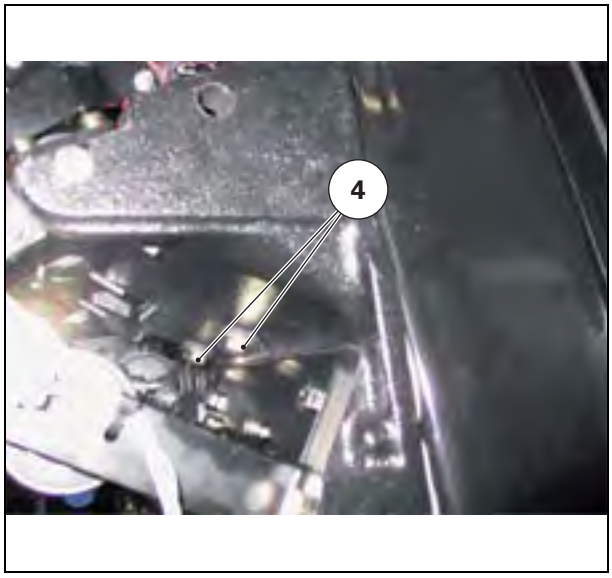

I011636 Fig. 7

7. Remove the two screws securing the Orbitrol inside the cab (4). (Pedal assembly removed for a clearer view)

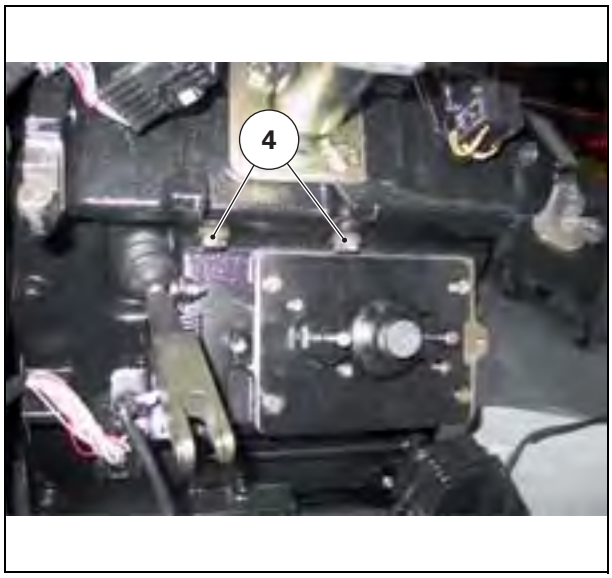

I011638 Fig. 8

I011639 Fig. 9

8. Remove the two screws (5) from each side of the Orbitrol outside the cab, and remove the Orbitrol.

I011640 Fig. 10

9. Unscrew the 4 screws securing the control shaft (6).

10. Take out the control shaft (7) and sensor (8).

Reassembly

1. Replace the seal (9) (Fig. 11).

2. Reassemble the Orbitrol in reverse order to removal.

3. Check the correct hydraulic operation of the steering and the correct electrical operation if the fast steering and Auto-Guide options are fitted.

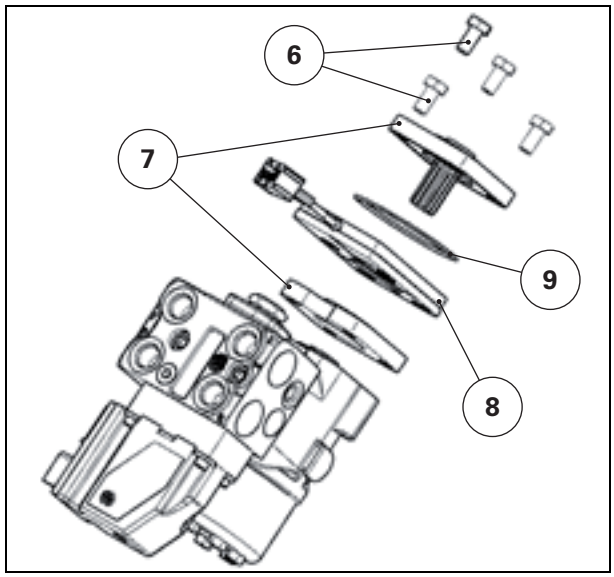

I011642 Fig. 11

B. Steering column

Disassembly

1. Remove the cover from the centre of the steering wheel, and the steering wheel nut.

I011643 Fig. 12

2. Remove the steering wheel.

I011644 Fig. 13

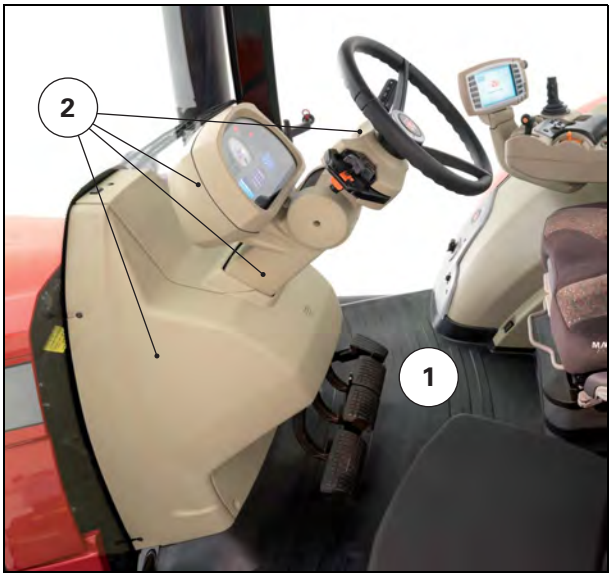

I011645 Fig. 14

3. Take out the floor mat (1).

4. Remove all the instrument panel trim (2).

I011635 Fig. 15

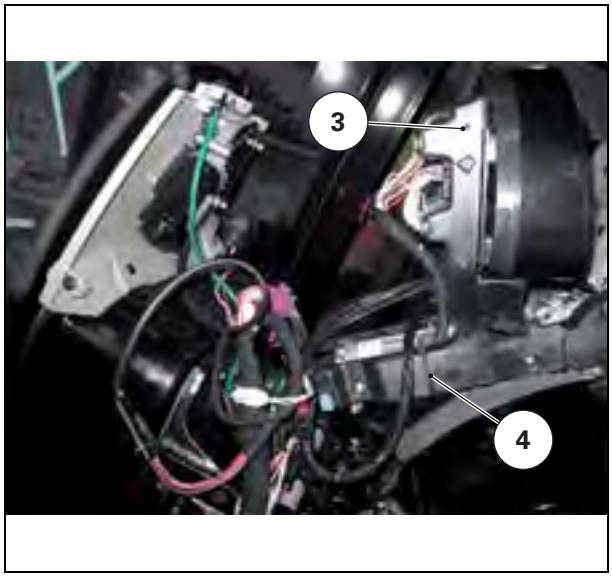

I011646 Fig. 16

5. Remove the screws securing the DCC (3), cut the plastic cable ties (4) holding the harnesses, and remove the DCC (5).
6. Disconnect connectors X56, X57, X58 and X71 (6).

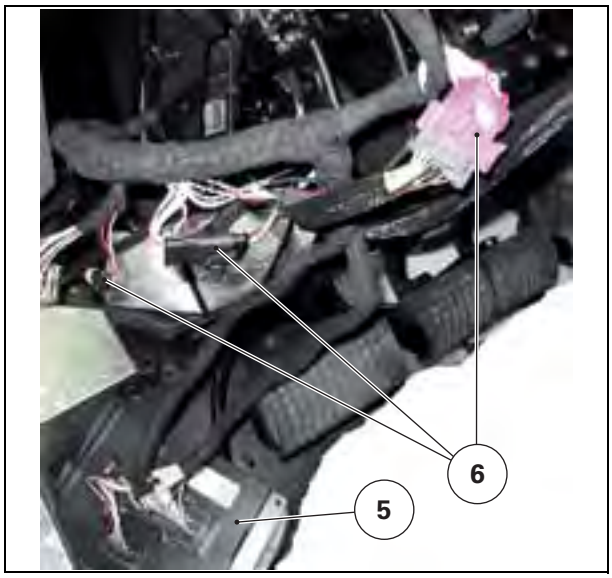

I011647 Fig. 17

7. Unscrew the 4 screws (7) securing the steering column, and remove the steering column (8).

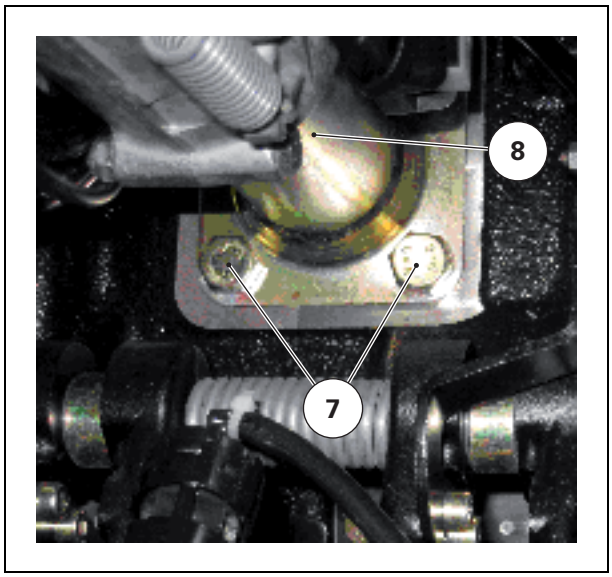

I011648 Fig. 18

Reassembly

1. Refit the steering column in reverse order to removal.

   NOTE: *Tighten the steering wheel nut to a torque of 48 Nm to 60 Nm.*

8D18

Steering unit - Service tools

TABLE OF CONTENTS