Service Manual
Trucks

Group **37**

Wiring diagram

FH12, FH16 RHD

FH12/FH16: 254453–

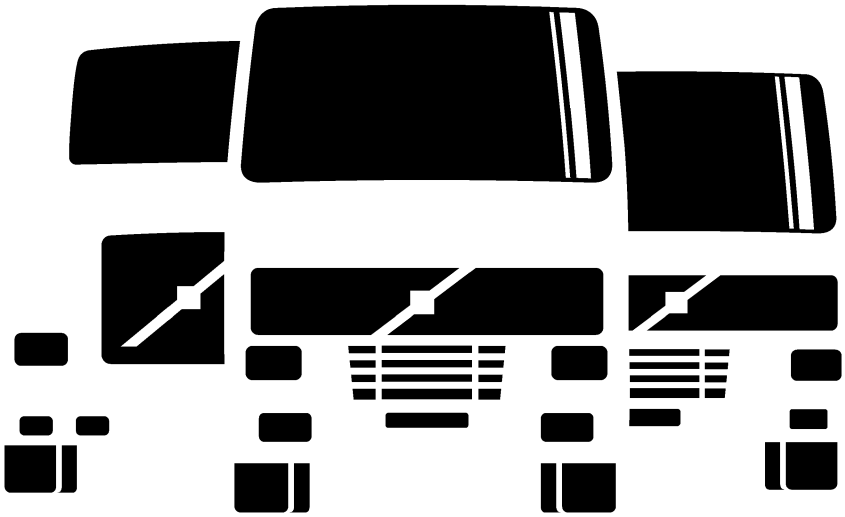

TSP23709/1

VOLVO

Foreword

The descriptions and service procedures contained in this manual are based on designs and methods studies carried out up to March 96.

The products are under continuous development. Vehicles and components produced after the above date may therefore have different specifications and repair methods. When this is judged to have a significant bearing on this manual, supplementary service bulletins will be issued to cover the changes.

The new edition of this manual will update the changes.

In service procedures where the title incorporates an operation number, this is a reference to V.S.T. (Volvo Standard Times).

Service procedures which do not include an operation number in the title are for general information and no reference is made to V.S.T.

The following levels of observations, cautions and warnings are used in this Service Documentation:

Note: Indicates a procedure, practice, or condition that must be followed in order to have the vehicle or component function in the manner intended.

Caution: Indicates an unsafe practice where damage to the product could occur.

Warning: Indicates an unsafe practice where personal injury or severe damage to the product could occur.

Danger: Indicates an unsafe practice where serious personal injury or death could occur.

Volvo Truck Corporation
Göteborg, Sweden

Order number: TSP23709/1

© 96 Volvo Truck Corporation, Göteborg, Sweden

All rights reserved. No part of this publication may be reproduced, stored in retrieval system, or transmitted in any forms by any means, electronic, mechanical, photocopying, recording or otherwise, without the prior written permission of Volvo Truck Corporation.

ENG01858

Contents

Component wiring diagram index 2

Component wiring diagrams 4

Illustration index 49

Illustrations 50

Circuit board (32) electrical centre 102

Fuses on circuit board (32) electrical centre 104

Relays on circuit board (32) electrical centre 105

Cable harness illustration index 106

List of connectors 109

List of components 114

Abbreviations 119

Cable colour code 120

Feedback

Component wiring diagram index

AA	Starter system, engine preheating	page 4
BL	UI, exhaust brake, exhaust pressure governor (FH12)	page 5
BN	EDC, exhaust brake, exhaust pressure governor (FH16)	page 6
CE	Head light, parking light,marker light, DIM-DIP	page 7
CG	Foglight, rear fog light	page 8
CH	Spotlight (STD)	page 8
CI	Spotlight (EU)	page 8
CK	Brake light	page 9
CL	Trailer controlled exhaust brake	page 9
CN	Direction indicator, hazard warning light	page 10
EA	Reversing light, reversing warning	page 10
ED	Loading light, fifth wheel light	page 11
EJ	Roof sign light (L1H1/L2H1)	page 11
EK	Roof sign light (L2H2)	page 11
ER	Interior light (L1H1/ L2H1)	page 12
ES	Interior light (L2H2/ L2H3)	page 13
EV	Cigarette lighter	page 14
EX	12 V outlet in cab	page 14
FA	Horn	page 15
GA	Windscreen wipers and washers, headlamp wipers and washers	page 15
HA	Climate unit	page 16
HB	Cab heater EBERSPÄCHER D1LC	page 17
HD	Electrically heated and adjusted seat	page 18
HG	Electrically heated mirror	page 18
HH	Electrically operated mirror	page 19
HK	Air dryer	page 19
HM	Fuel filter heater, waterseperator heater	page 19
HP	Electrically cab tilt	page 20
JA	Radio, voltage divider, loudspeaker, alarm clock	page 21
KA	Electrically operated window winders	page 22
KB	Electrically operated sunroof	page 22
KE	SRS-air bag	page 23
KG	Electrically operated passenger door lock	page 23
KH	Central door lock	page 23
LD	Power take-off	page 24
LE	Double power take-off	page 24

LG	Differential lock	page 25
LO	GEARTRONIC- automatic gear shift	page 26
MA	Bogie lift hydraulic	page 27
MD	Bogie lift hydraulic, with axle load limiter	page 28
MN	Air suspension 4x2	page 29
MP	Air suspension 6x2, bogie lift, < 15 tonnes	page 30
MQ	Air suspension 6x2, bogie lift, < 15 tonnes with time limitation	page 31
MR	Air suspension 6x2, bogie lift, pusher	page 32
MS	Air suspension 6x2, bogie lift, 15 tonnes	page 33
MV	AIR-DUMP-drive axle load increase (RADT-A8)	page 34
MW	AIR-DUMP-drive axle load increase with time limitation (RADT-A8)	page 34
MX	Air suspension 6x4	page 35
MY	Air suspension 6x4, <15 tonnes with time limitation	page 36
NA	Instrument LHS unit (standard design)	page 37
NB	Instrument central unit	page 38
NC	Instrument RHS unit (standard design)	page 39
NG	Instrument LHS unit (DIS)	page 40
NJ	Instrument RHS unit (DIS)	page 41
NO	Instrument control lamps module	page 42
OA	ABS, anti-lock brakes	page 43
OG	Retarder	page 44
PA	Headlight level control	page 45
XA	Extra fuses	page 45
XD	Key switch relay, rheostat	page 46
ZA	Earth connections	page 47
ZB	Earth connections	page 48

Component wiring diagrams

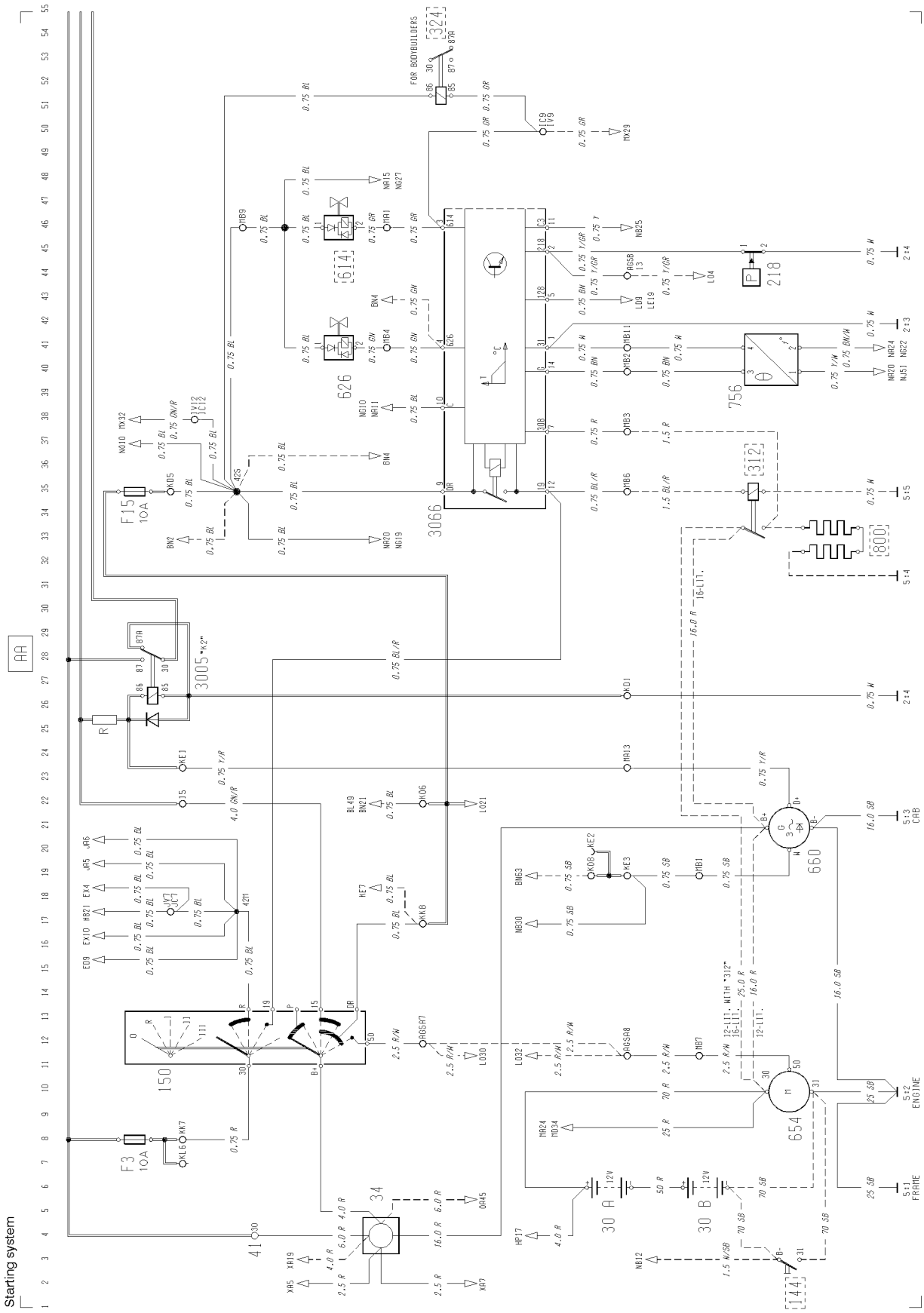

UI, exhaust brake, exhaust pressure governor (FH12)

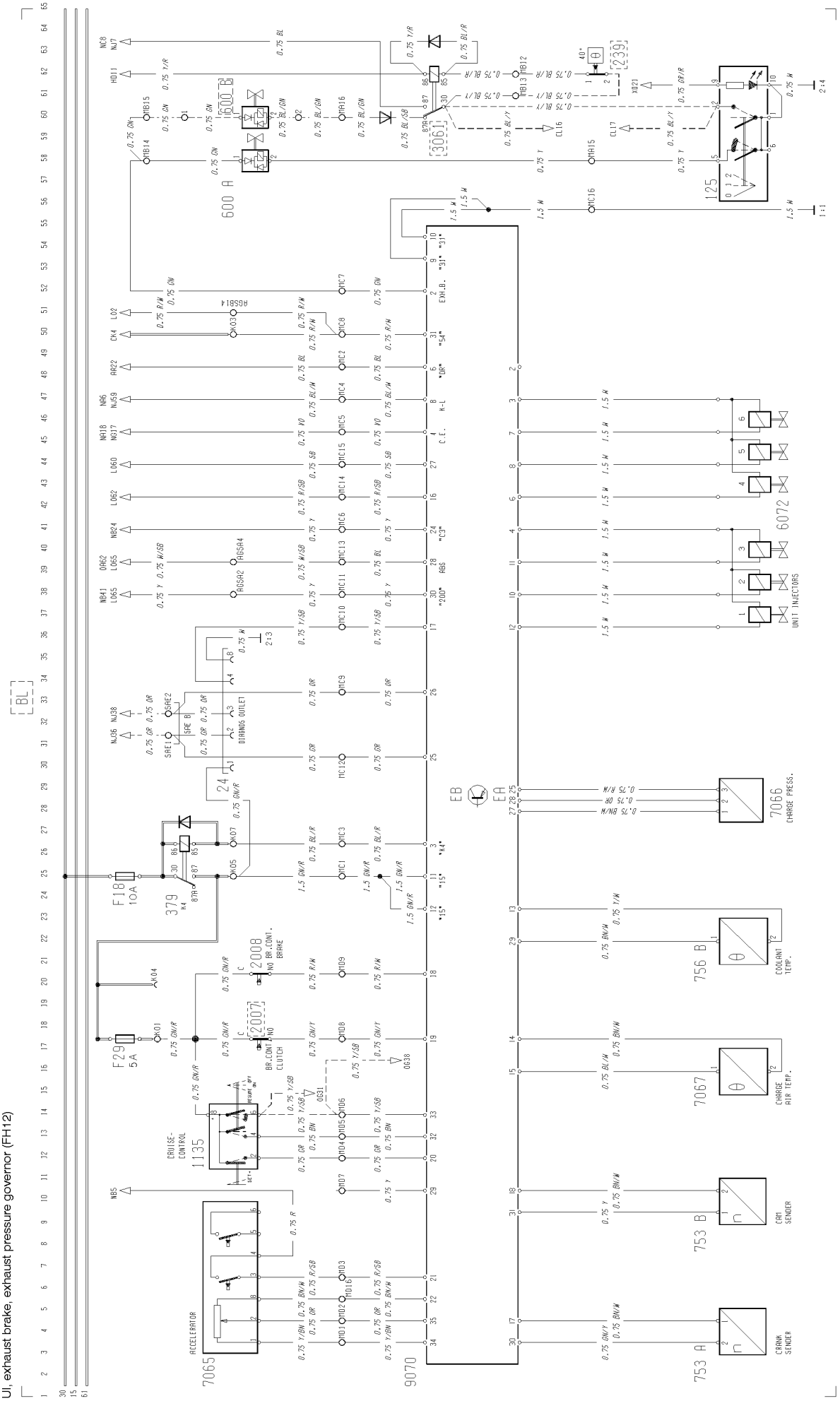

T3008071

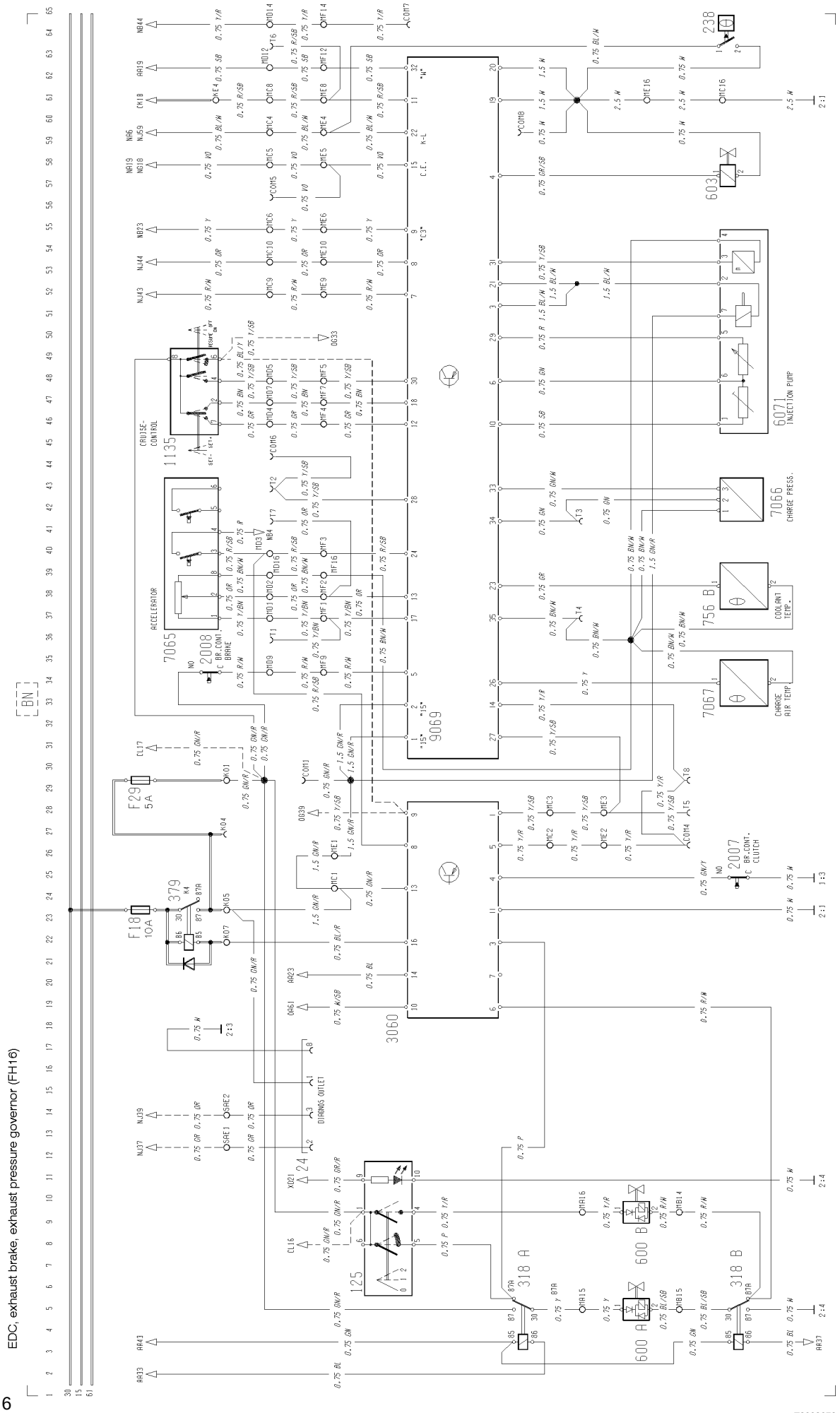
EDC, exhaust brake, exhaust pressure governor (FH16)
CRUISE-CONTROL
1135
ACCELERATOR
7065
2008
BR.CONT. BRAKE
9069
3060
F29 5A
F18 10A
379
125
DIAGNOS OUTLET
318 A
318 B
600 A
600 B
603
238
6071
INJECTION PUMP
7066
CHARGE PRESS.
756 B
COOLANT TEMP.
7067
CHARGE AIR TEMP
2007
BR.CONT. CLUTCH
T3008072

Head light, parking light, maker light, DIM-DIP

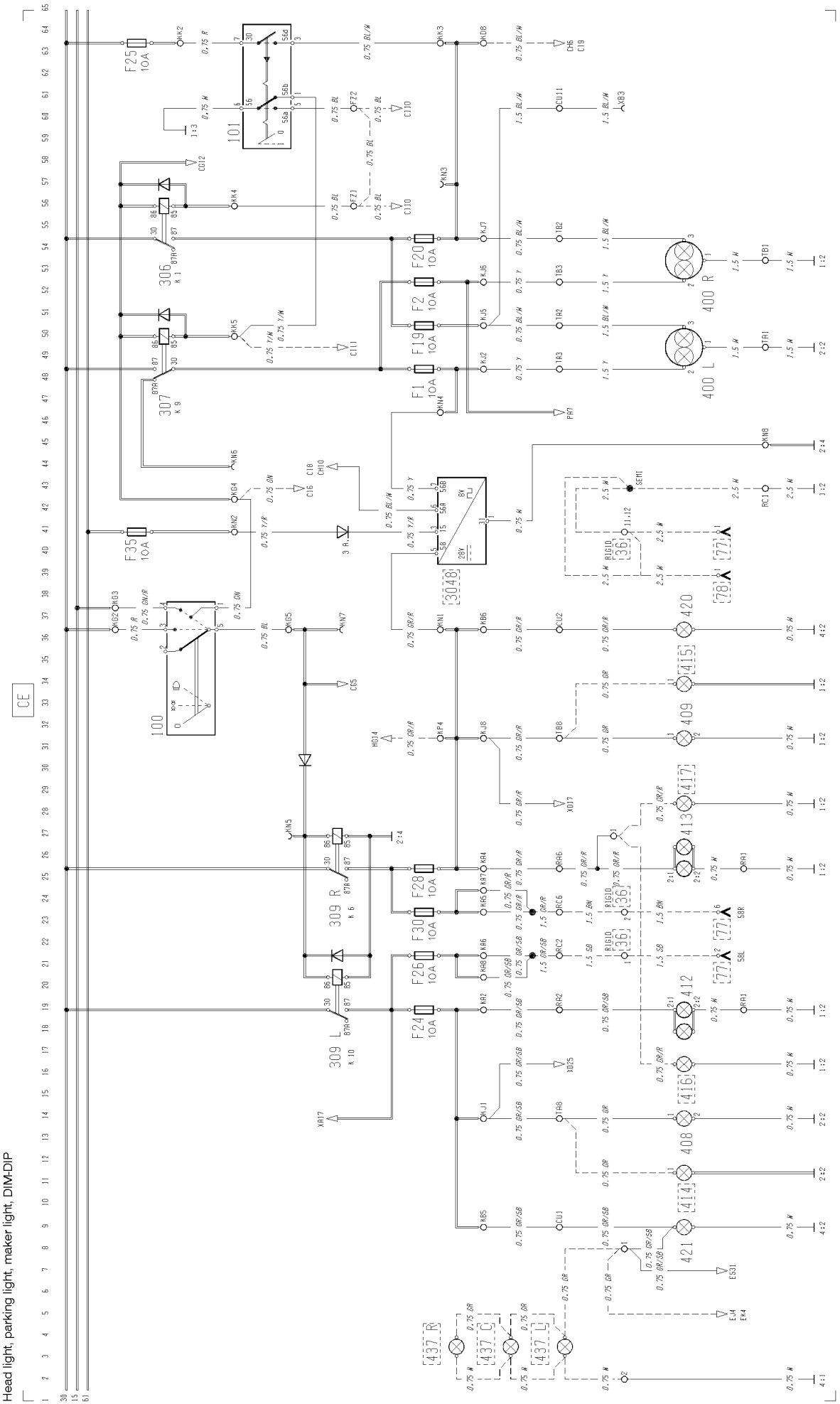

T3008073

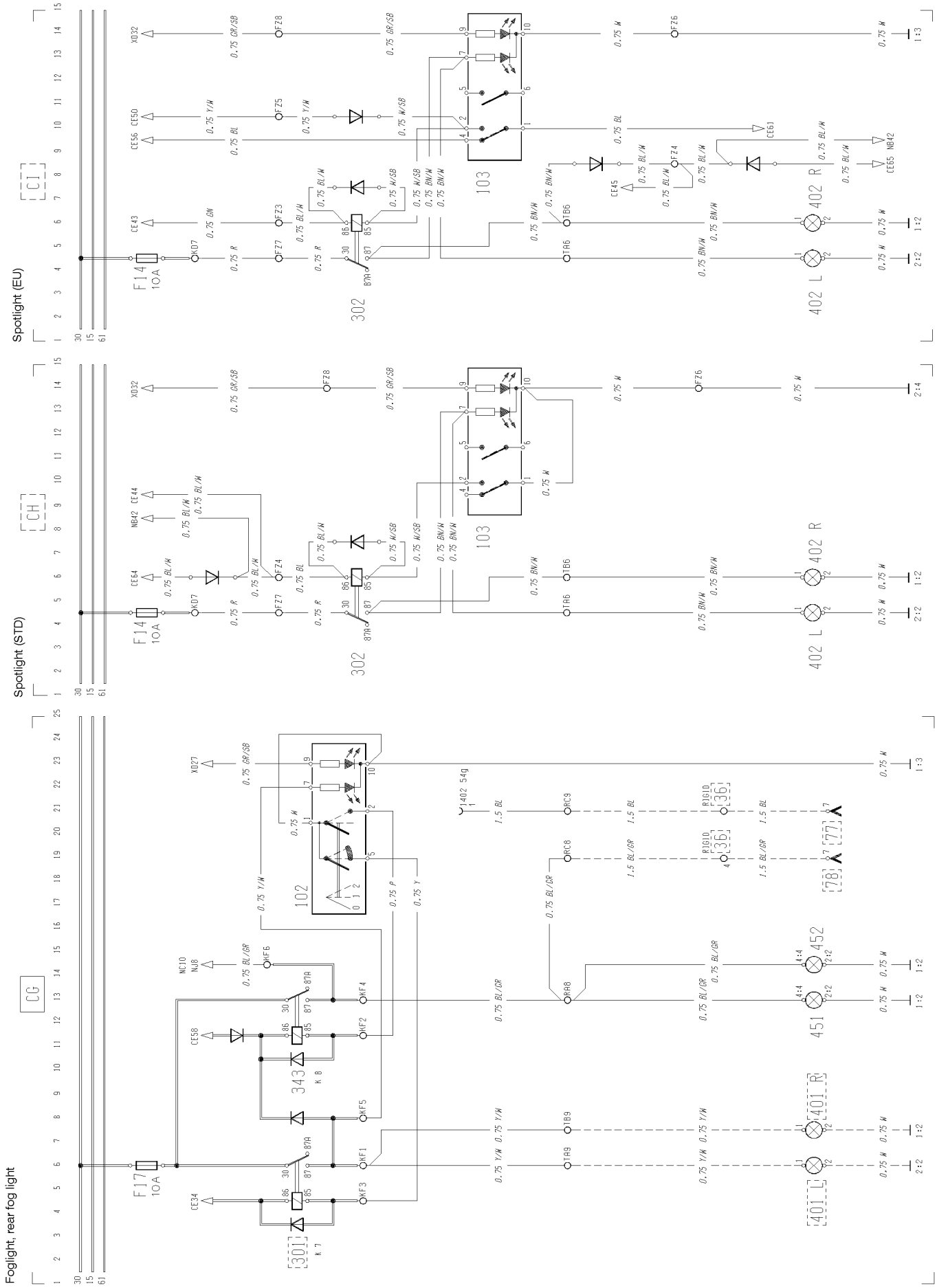
Spotlight (EU)
Spotlight (STD)
Foglight, rear fog light
CI
CH
CG
F14
10A
F17
10A
302
103
102
343
402 R
402 L
451
452
401 R
401 L
T3008074

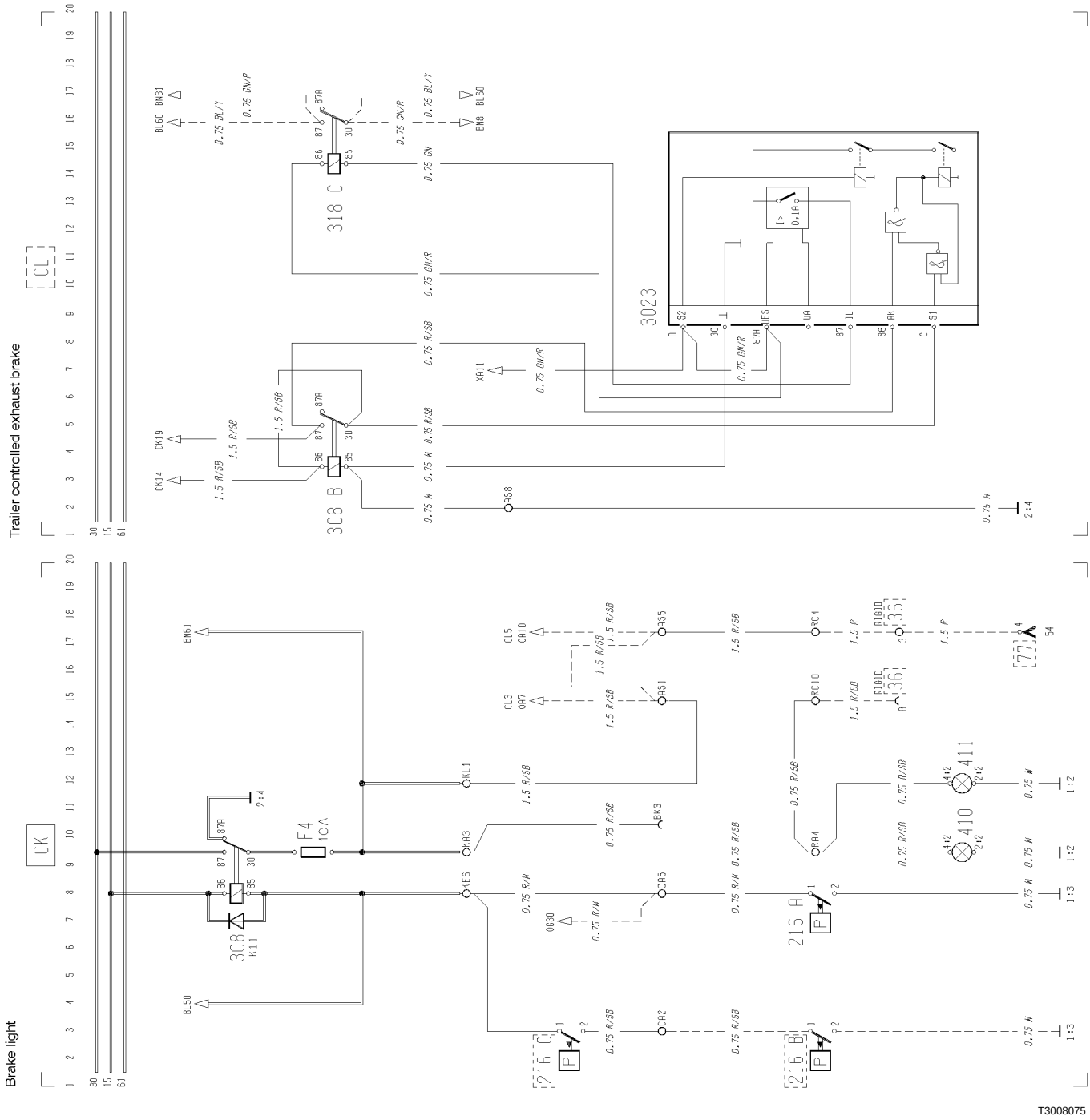
Trailer controlled exhaust brake
Brake light
CL
CK
318 C
308 B
308 K11
F4 10A
3023
216 A
216 B
216 C
411
410
136
77
T3008075

Reversing light, reversing warning

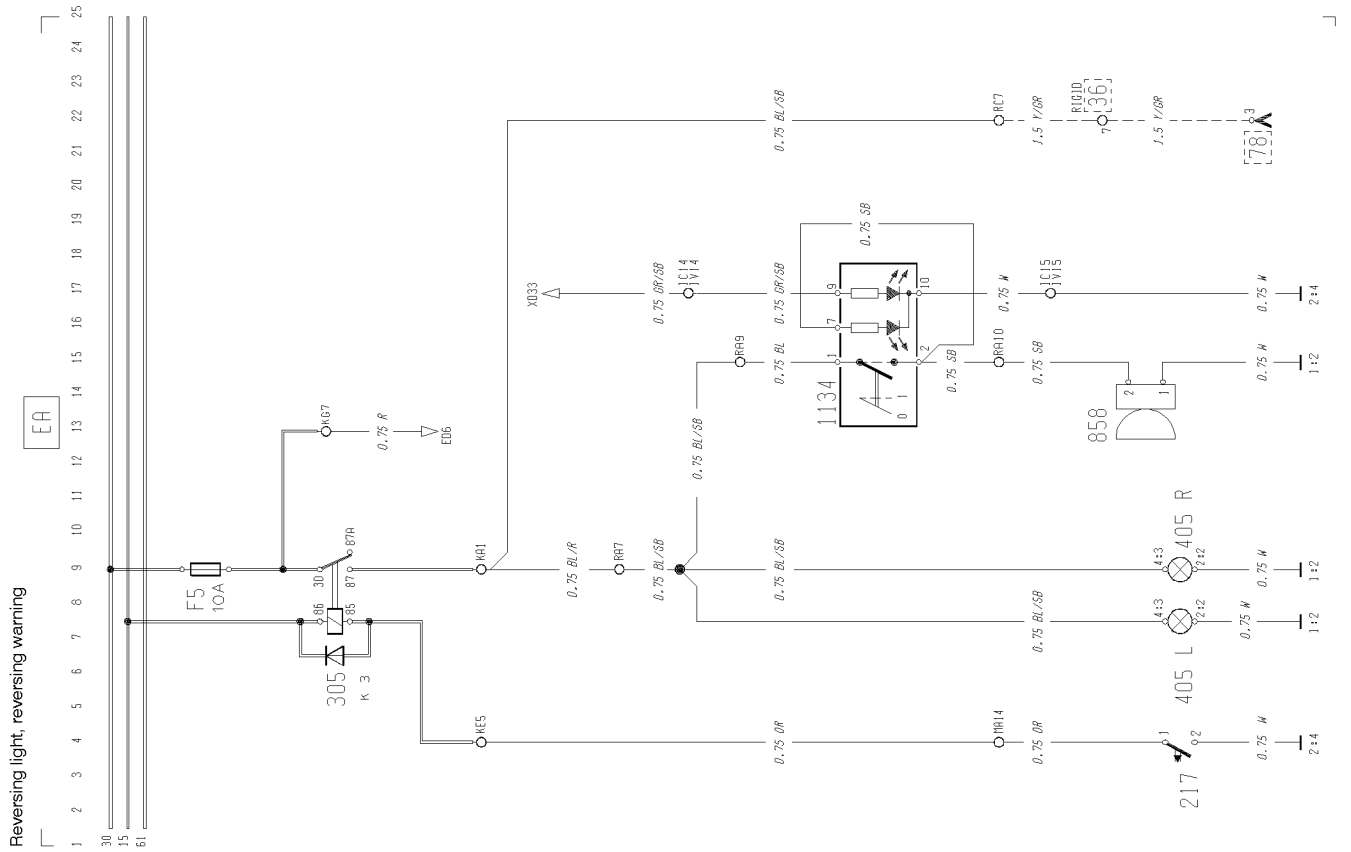

Direction indicator, hazard warning light

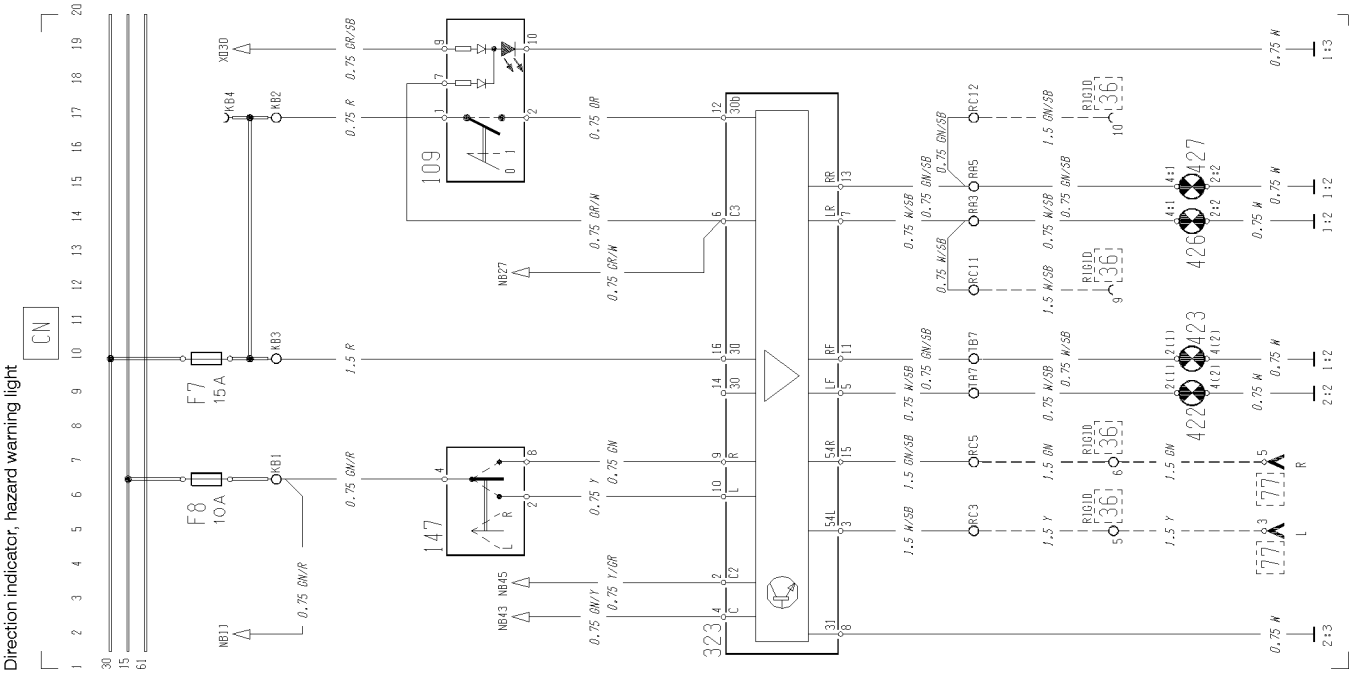

T3008076

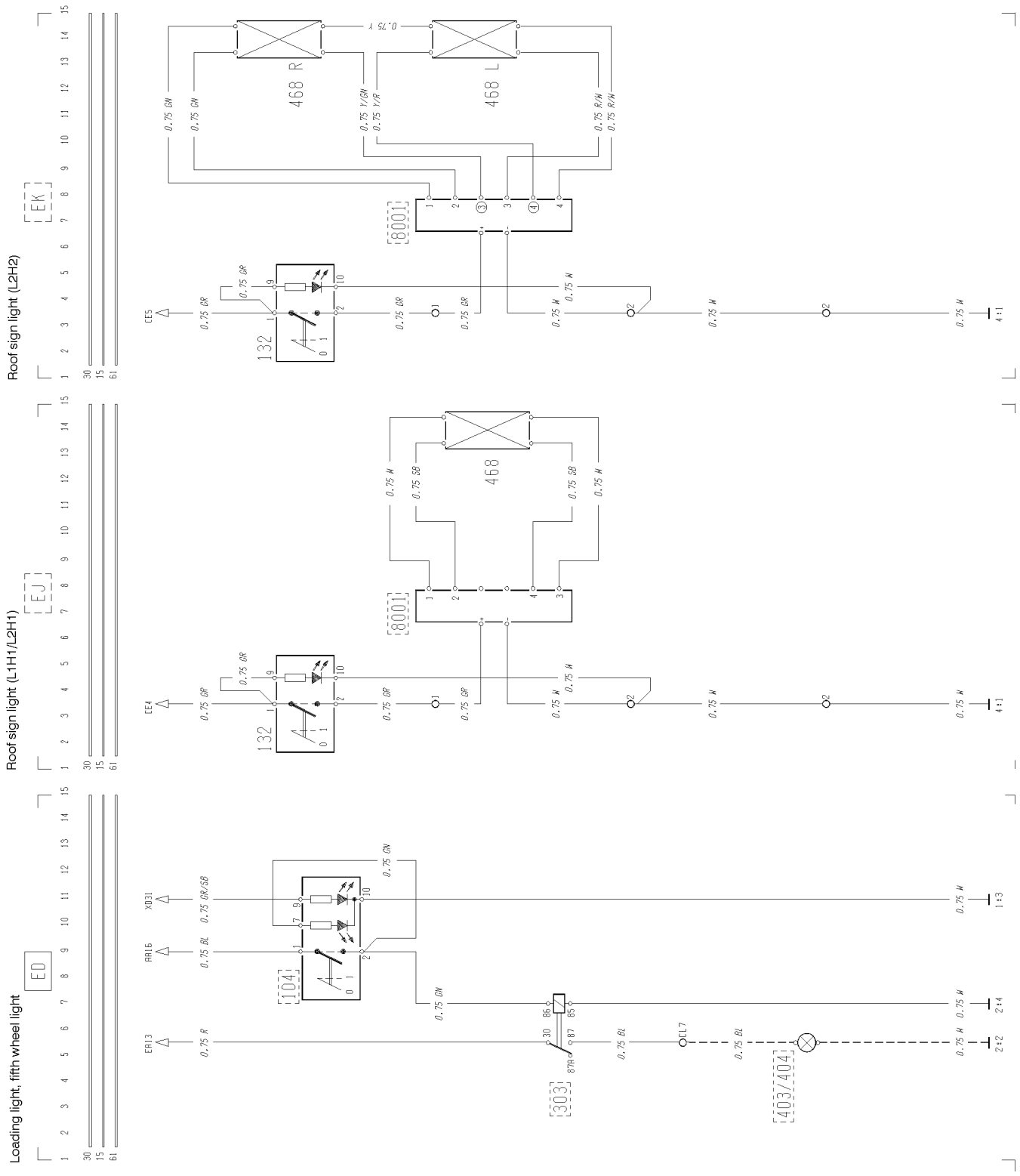
Roof sign light (L2H2)
Roof sign light (L1H1/L2H1)
Loading light, fifth wheel light
EK
EJ
ED
468 R
468 L
468
132
8001
1041
1303
403/404
CE5
CE4
AA16
XD31
EA13
CL7
0.75 GN
0.75 GR
0.75 W
0.75 SB
0.75 BL
0.75 R
0.75 GR/SB
0.75 V/GN
0.75 V/R
0.75 R/W
0.75 Y
T3008077

Interior light (L1H1/L2H1)

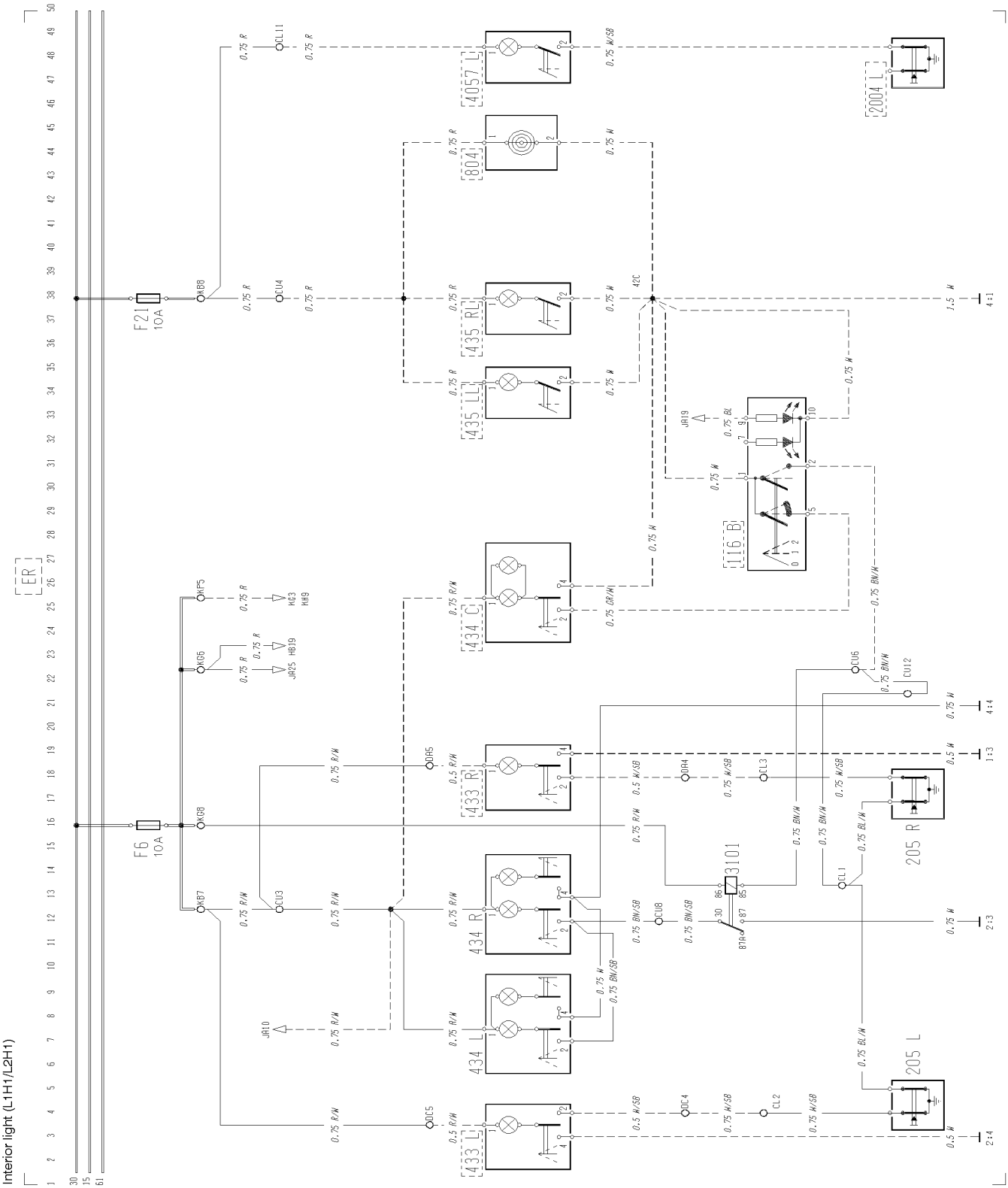

T3008078

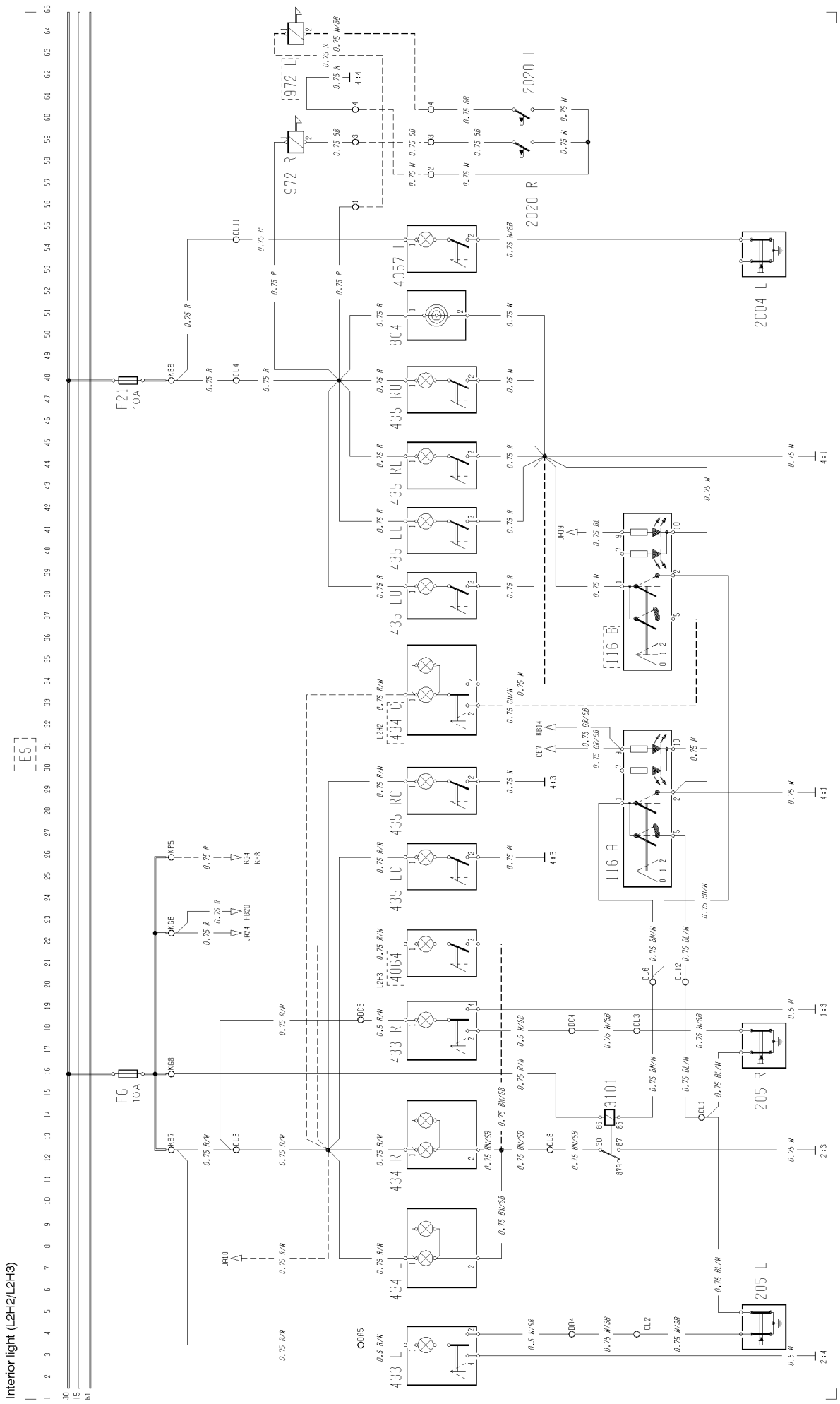
Interior light (L2H2/L2H3)
F21 10A
F6 10A
ES
972 L
972 R
2020 L
2020 R
4057 L
804
435 RU
435 RL
435 LL
435 LU
434 C
435 RC
435 LC
4064
433 R
434 R
434 L
433 L
3101
116 B
116 A
2004 L
205 R
205 L
T3008079

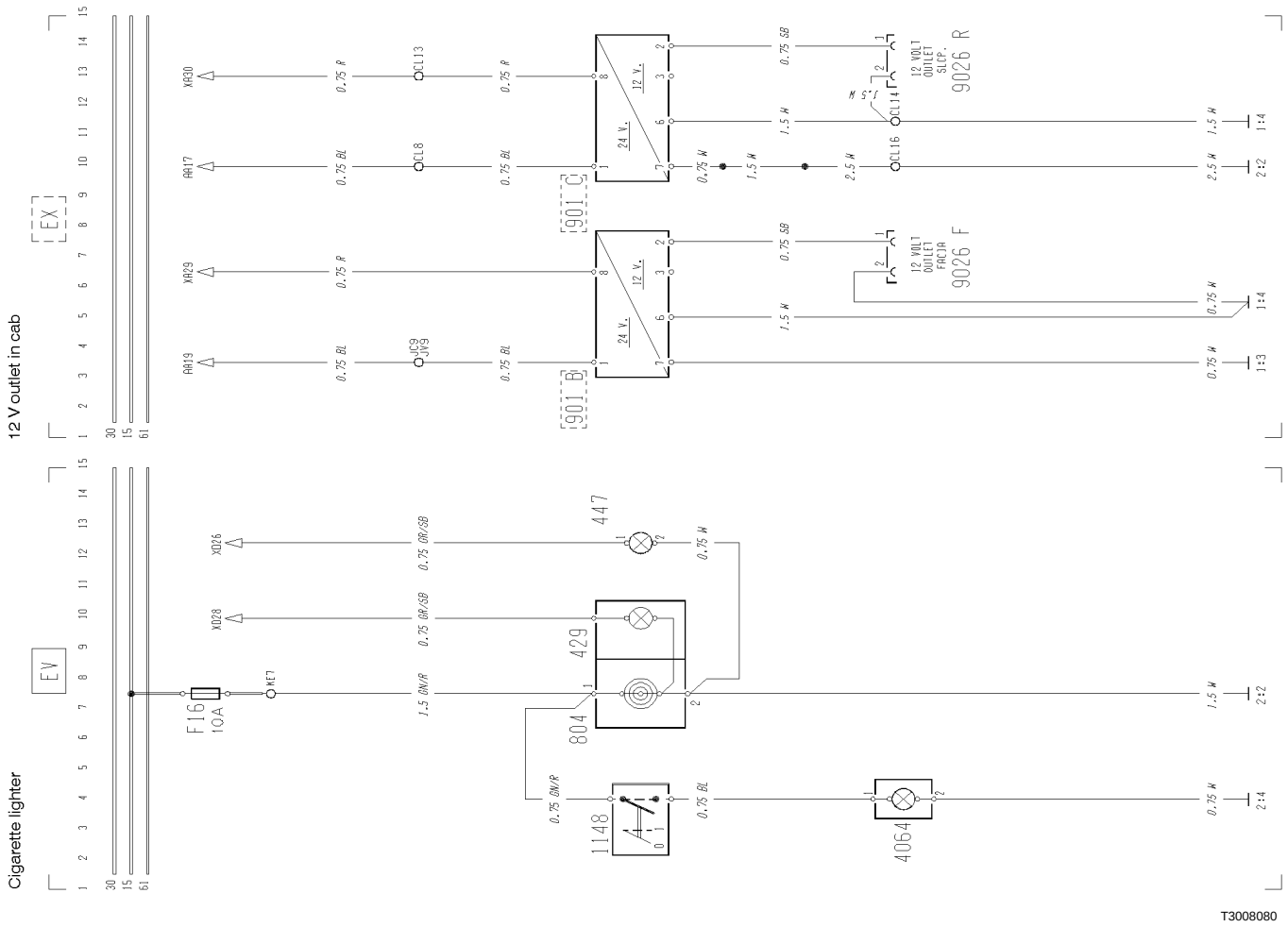
12 V outlet in cab
Cigarette lighter
EX
EV
XA30
AA17
XA29
AA19
XD26
XD28
CL13
CL8
JC9
JV9
CL14
CL16
12 V.
24 V.
901 C
901 B
12 VOLT OUTLET SLCP.
9026 R
12 VOLT OUTLET FACIA
9026 F
F16
10A
KE7
447
429
804
1148
4064
T3008080

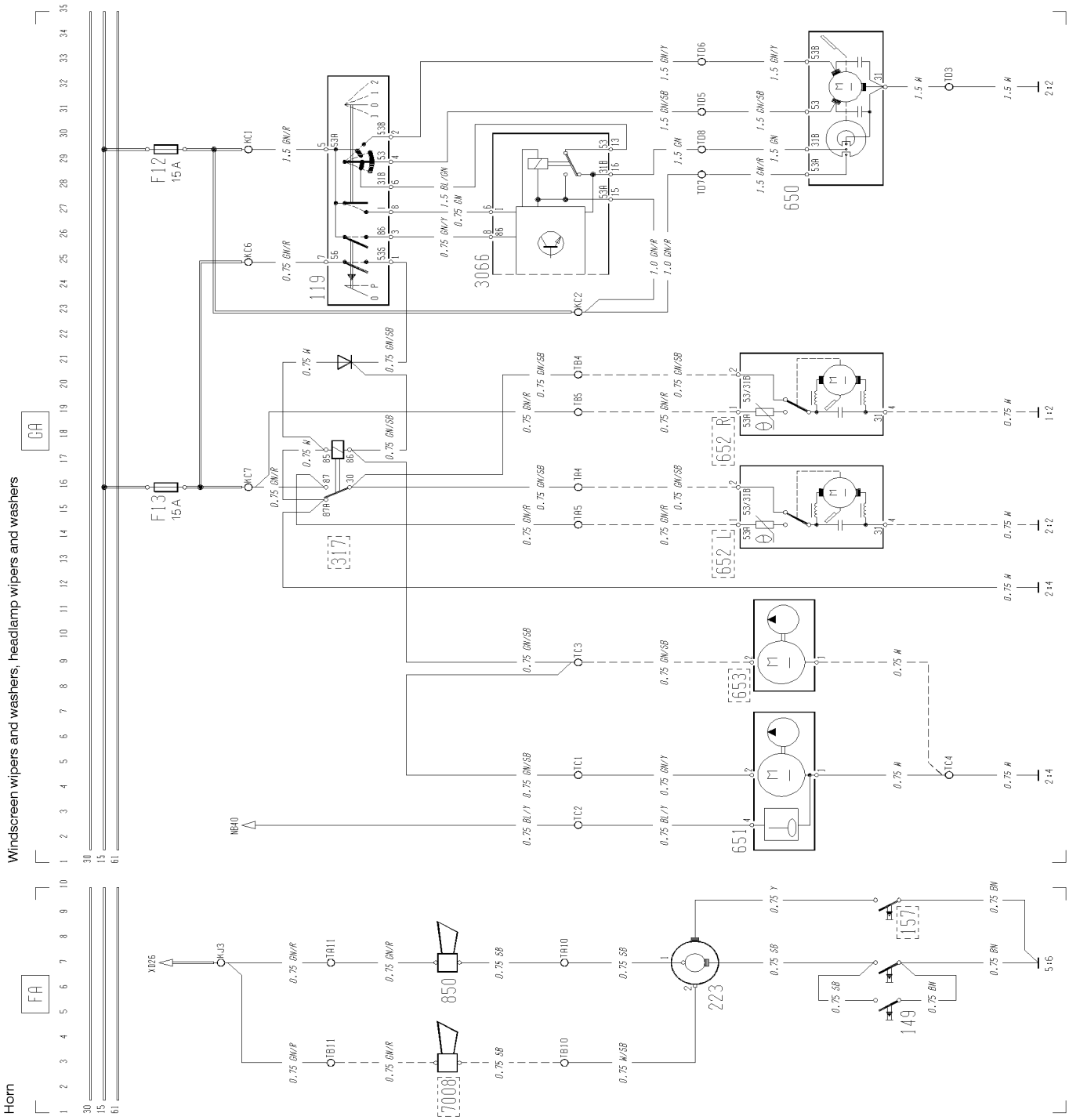
Windscreen wipers and washers, headlamp wipers and washers
Horn
GA
FA
F12
15A
F13
15A
119
3066
650
317
652 R
652 L
653
651
850
7008
223
157
149
T3008081

Climate unit

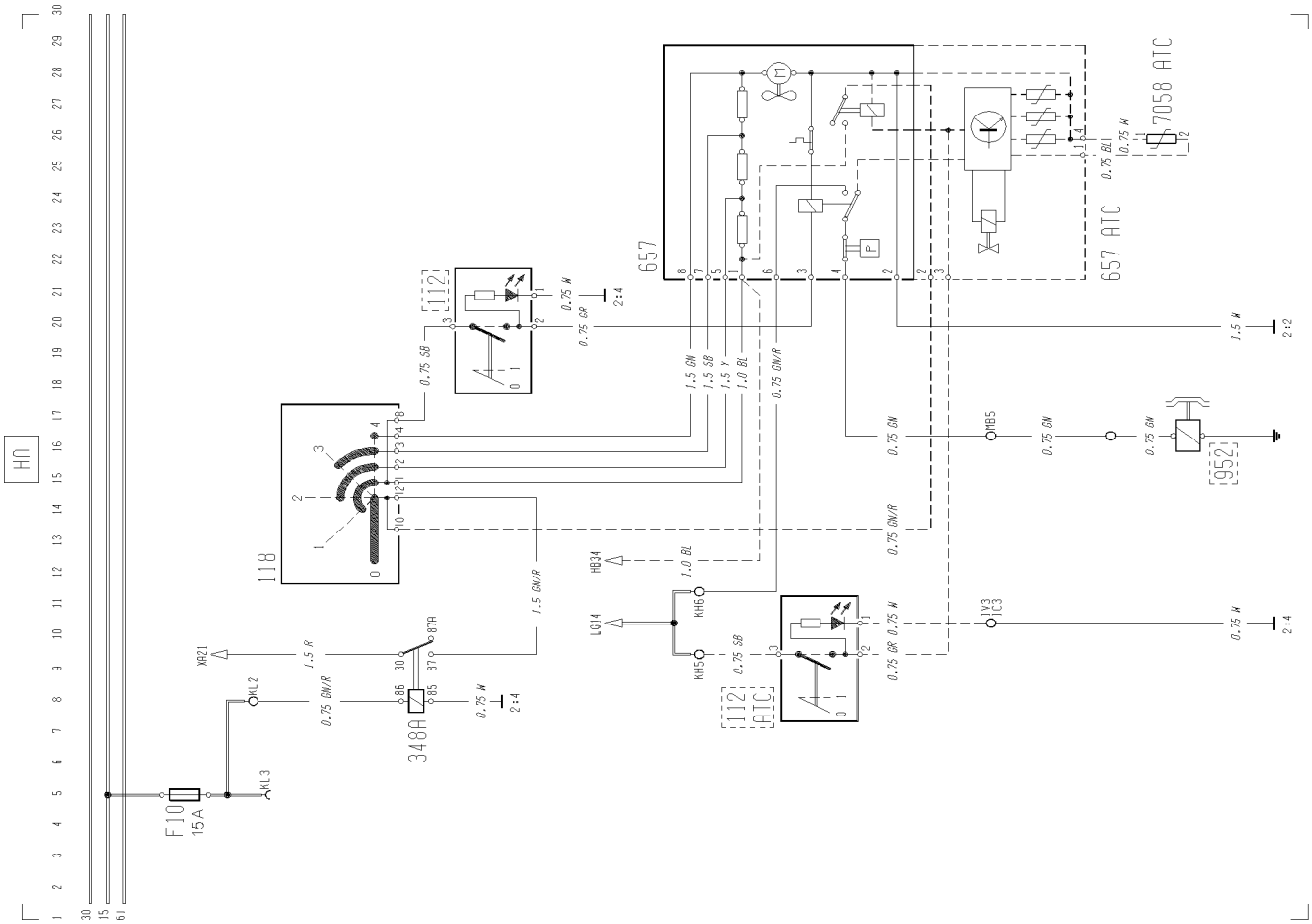

Cab heater EBERSPÄCHER D1LC

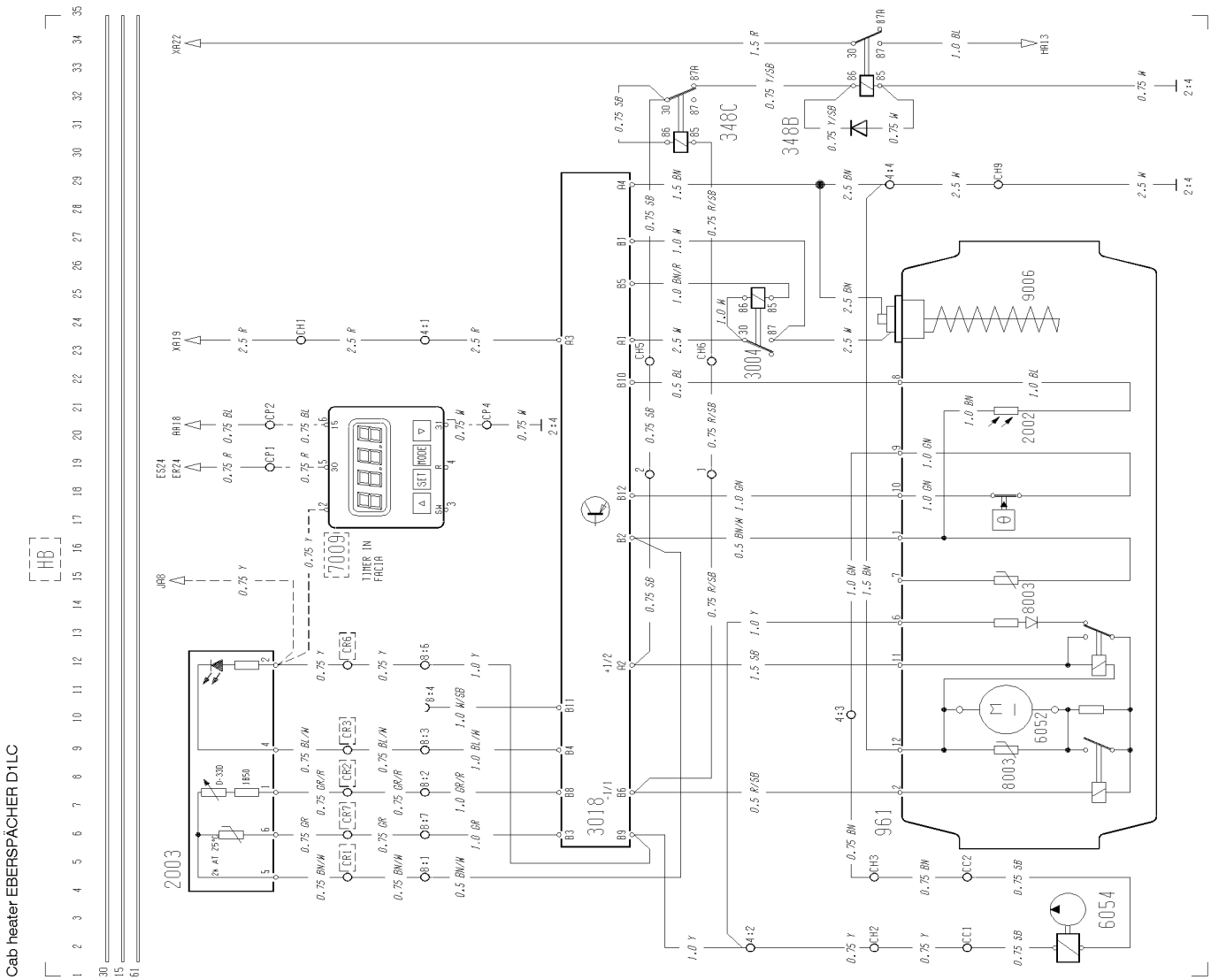

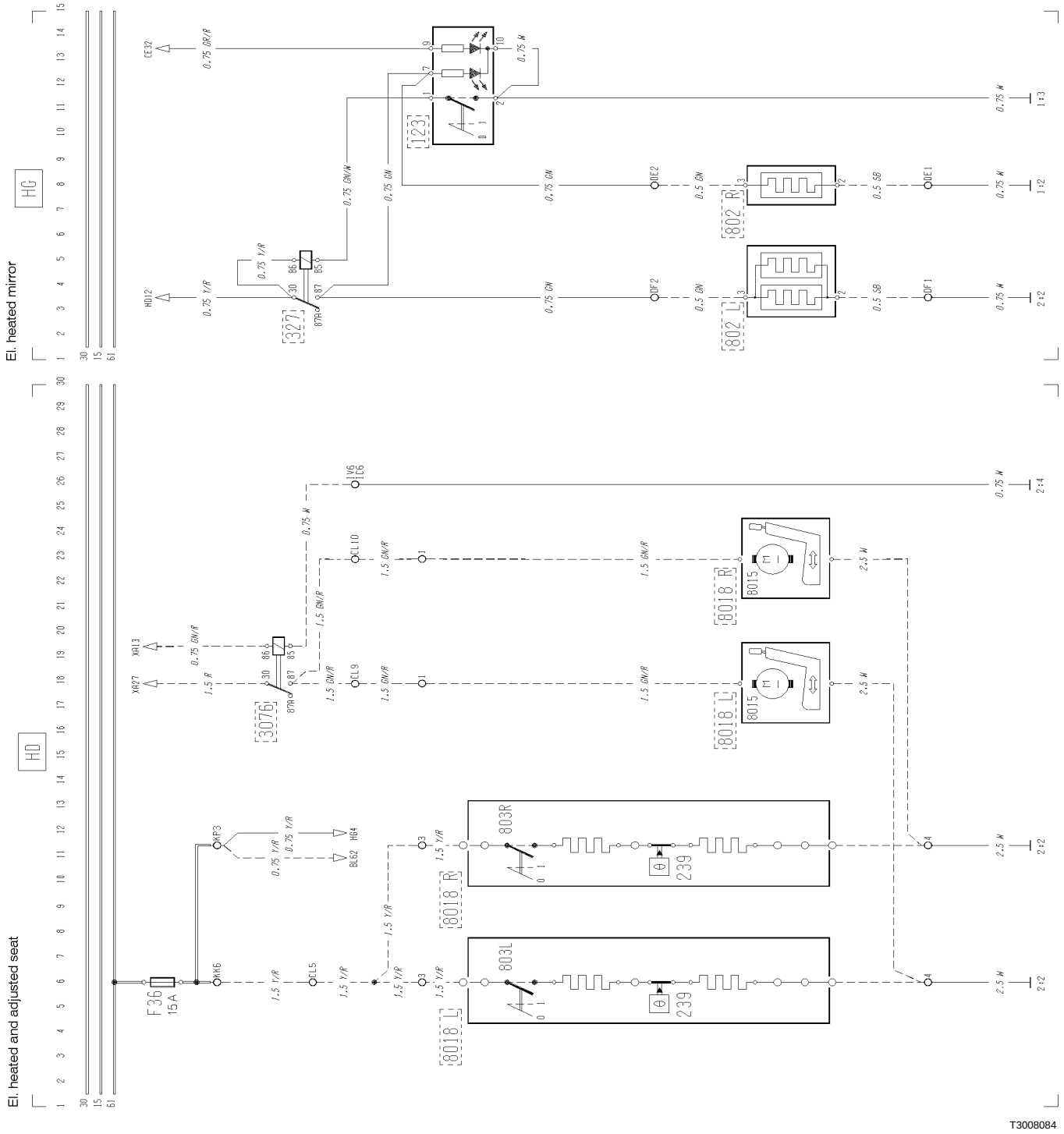
El. heated mirror
HG
El. heated and adjusted seat
HD
F36
15A
3076
8018 L
8018 R
803L
803R
239
8015
327
123
802 L
802 R
T3008084

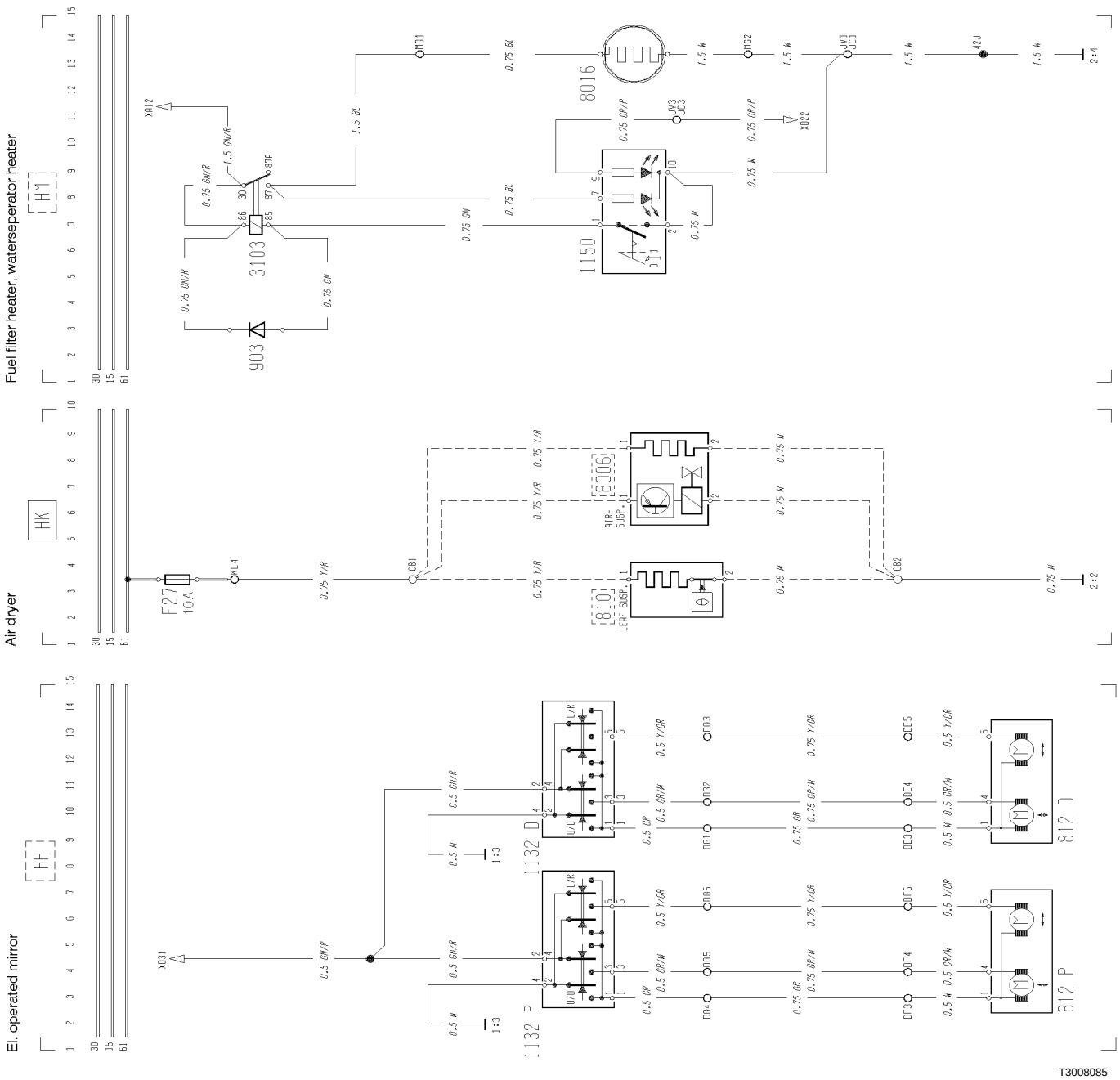
Fuel filter heater, waterseperator heater
Air dryer
El. operated mirror
HM
HK
HH
903
3103
1150
8016
8006
810
1132 D
1132 P
812 D
812 P
F27
10A
T3008085

El. cab tilt

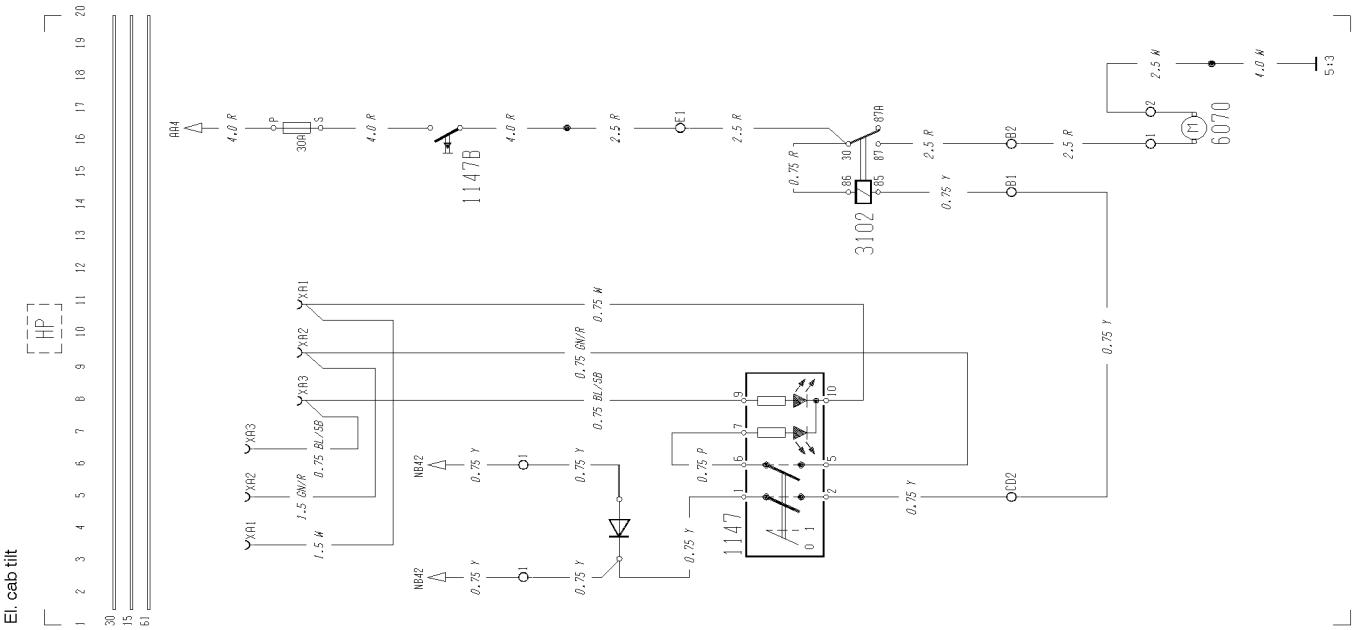

T3008086

Radio, voltage divider, loudspeaker, alarm clock

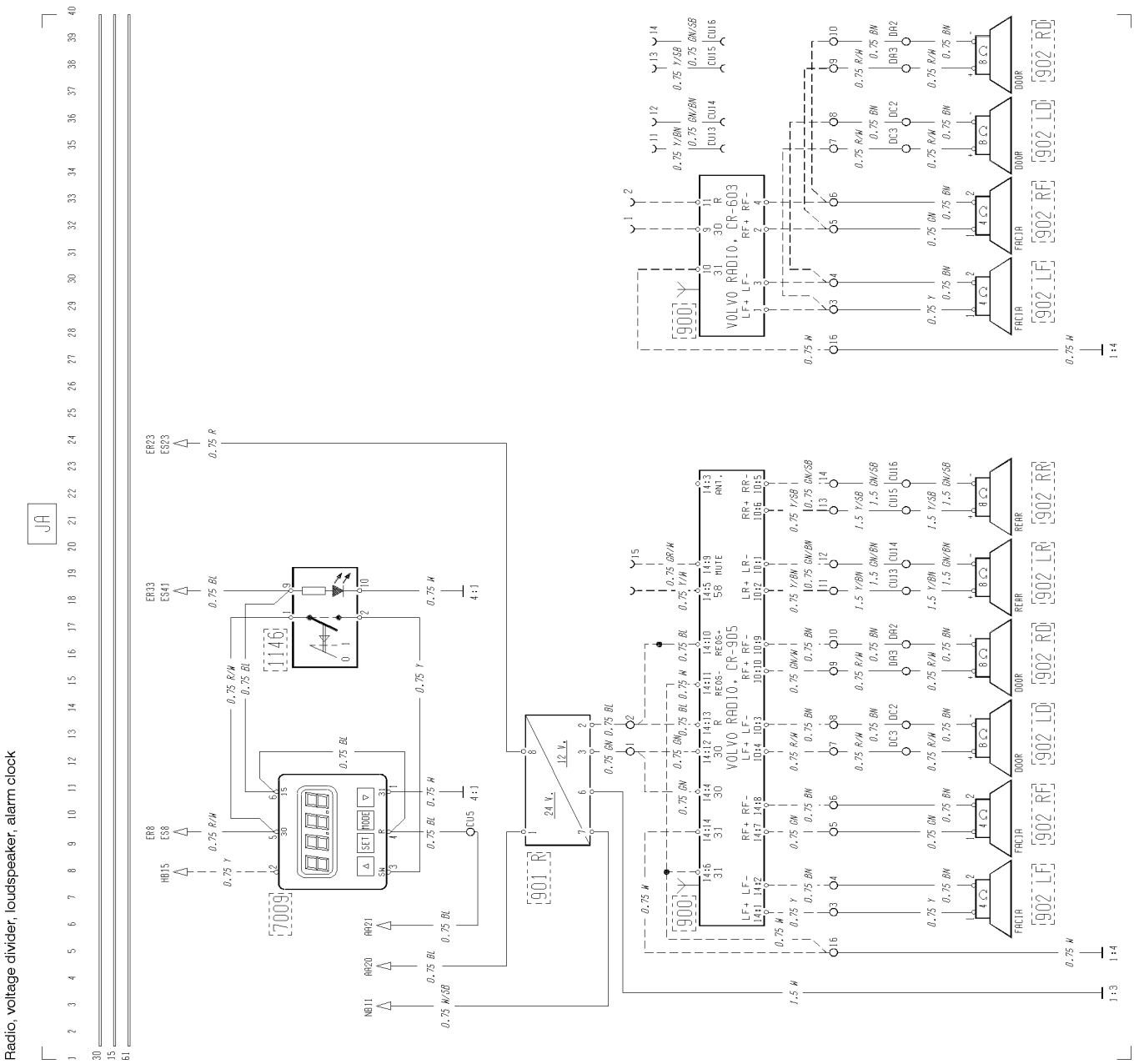

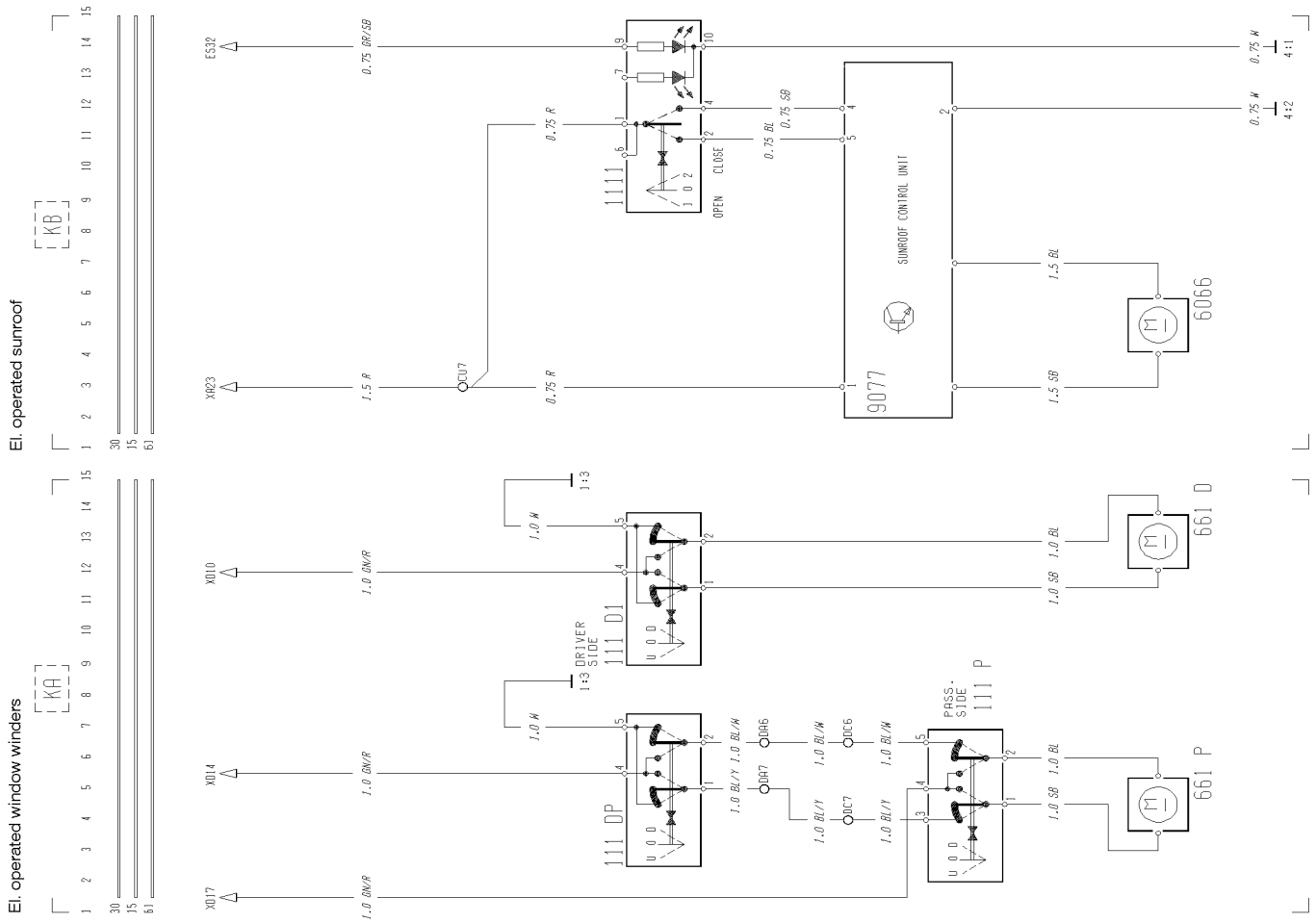
El. operated sunroof
El. operated window winders
KB
KA
ES32
XR23
XD10
XD14
XD17
0.75 GR/SB
1.5 R
0.75 R
0.75 SB
0.75 BL
0.75 W
1.5 BL
1.5 SB
1.0 GN/R
1.0 W
1.0 BL
1.0 SB
1.0 BL/W
1.0 BL/Y
CU7
1111
OPEN
CLOSE
SUNROOF CONTROL UNIT
9077
6066
111 D1
DRIVER SIDE
111 DP
PASS. SIDE
111 P
661 D
661 P
D86
D87
DC6
DC7
4:1
4:2
1:3
T3008088

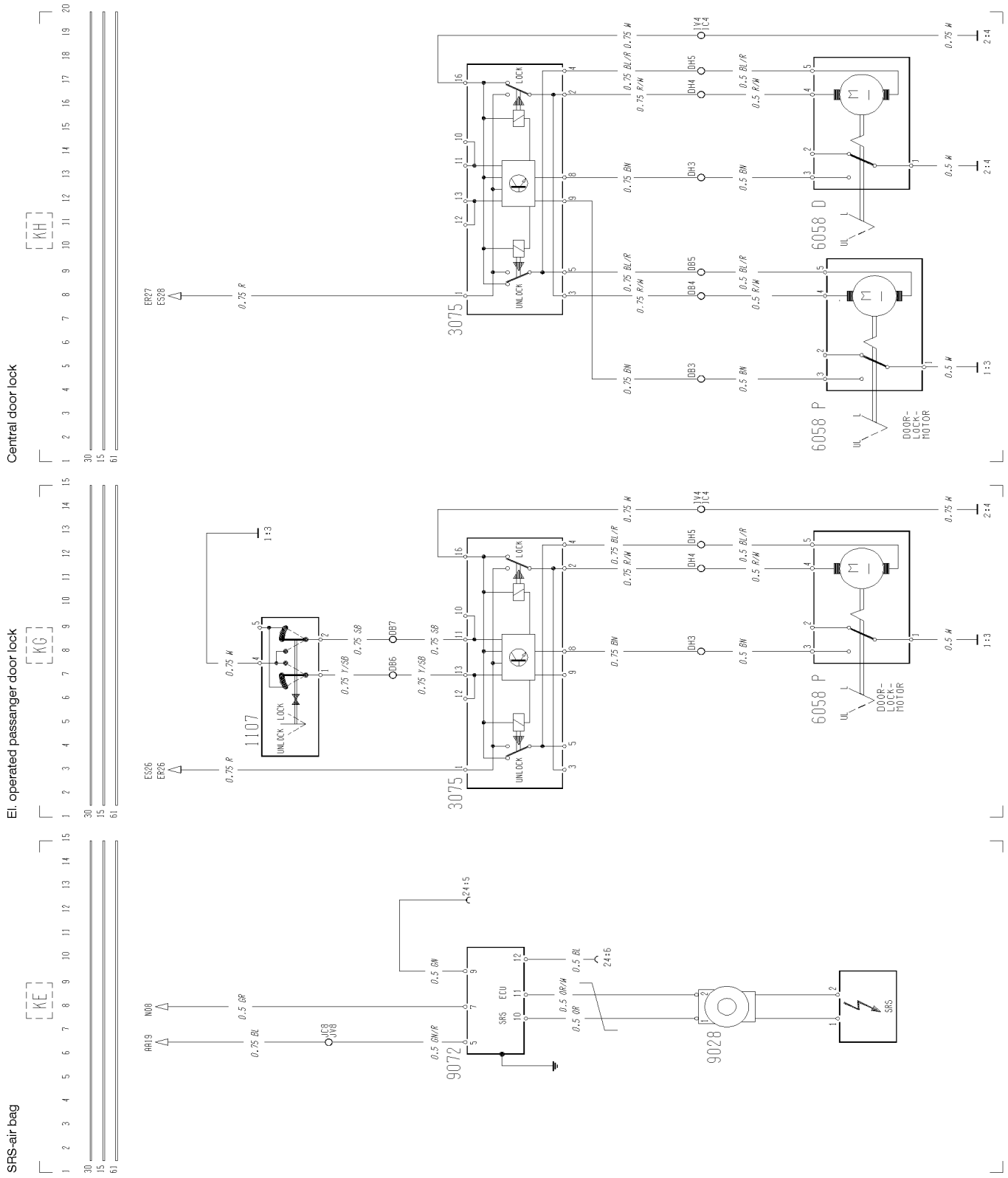
Central door lock
El. operated passanger door lock
SRS-air bag
KH
KG
KE
3075
6058 D
6058 P
DOOR-LOCK-MOTOR
1107
9072
9028
SRS
ECU
LOCK
UNLOCK
T3008089

Double power take-off

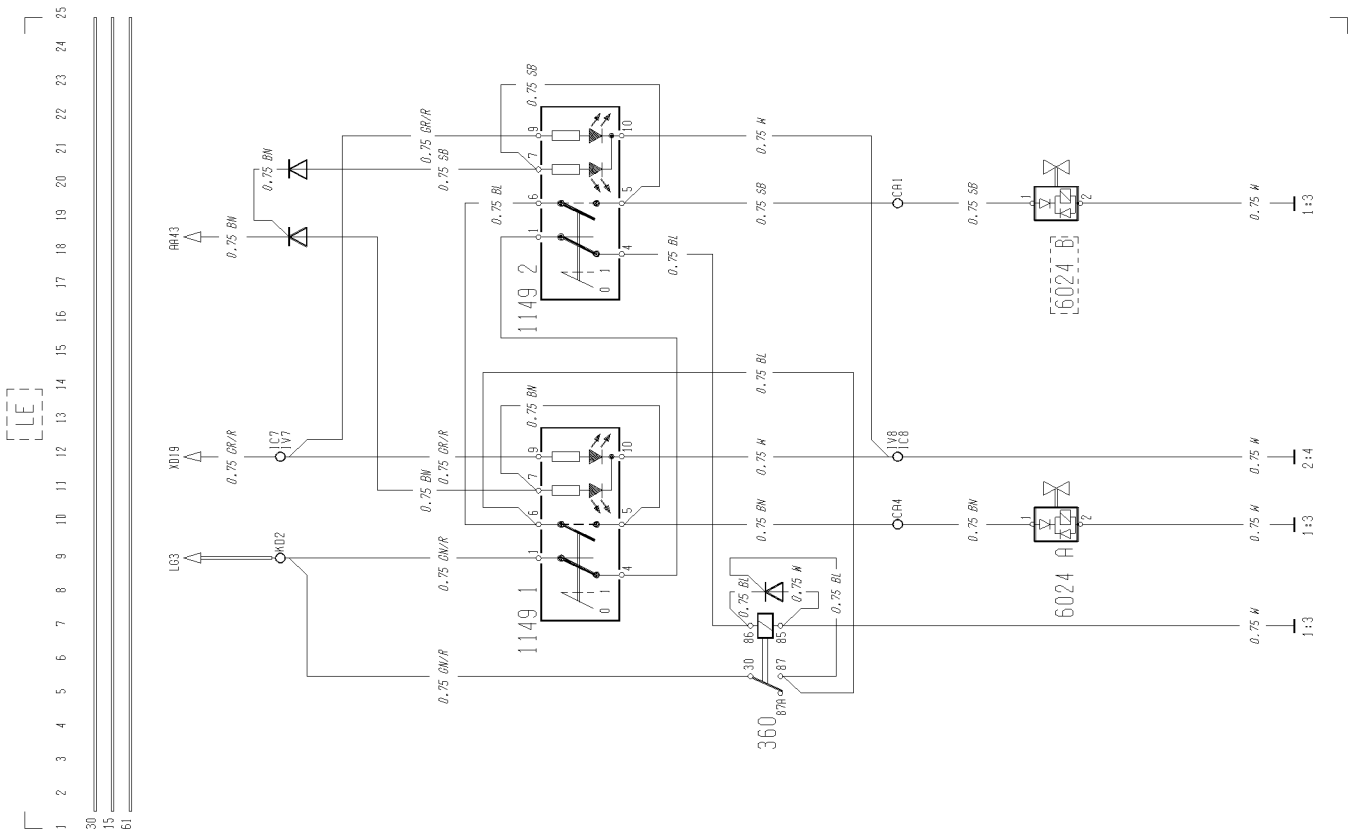

Power take-off

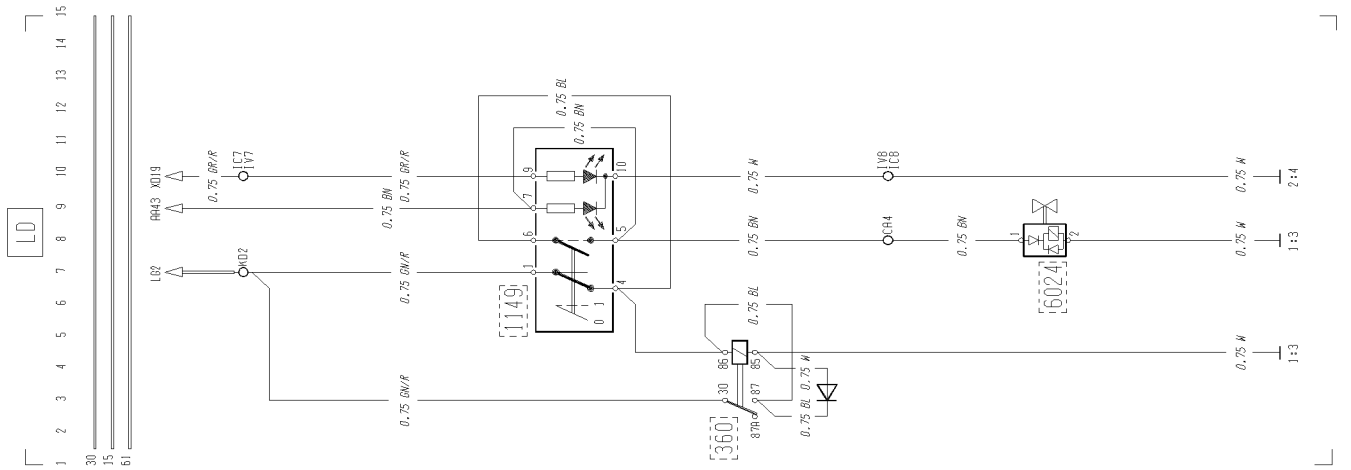

T3008090

Differential lock

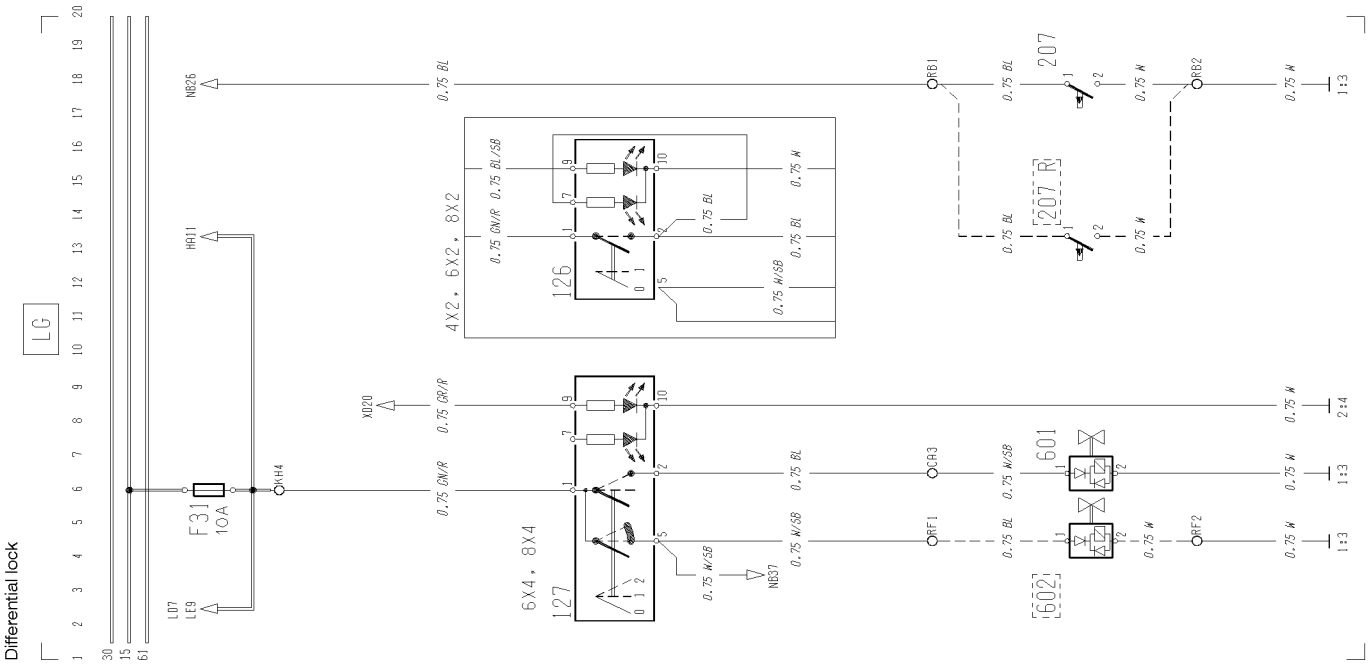

T3008091

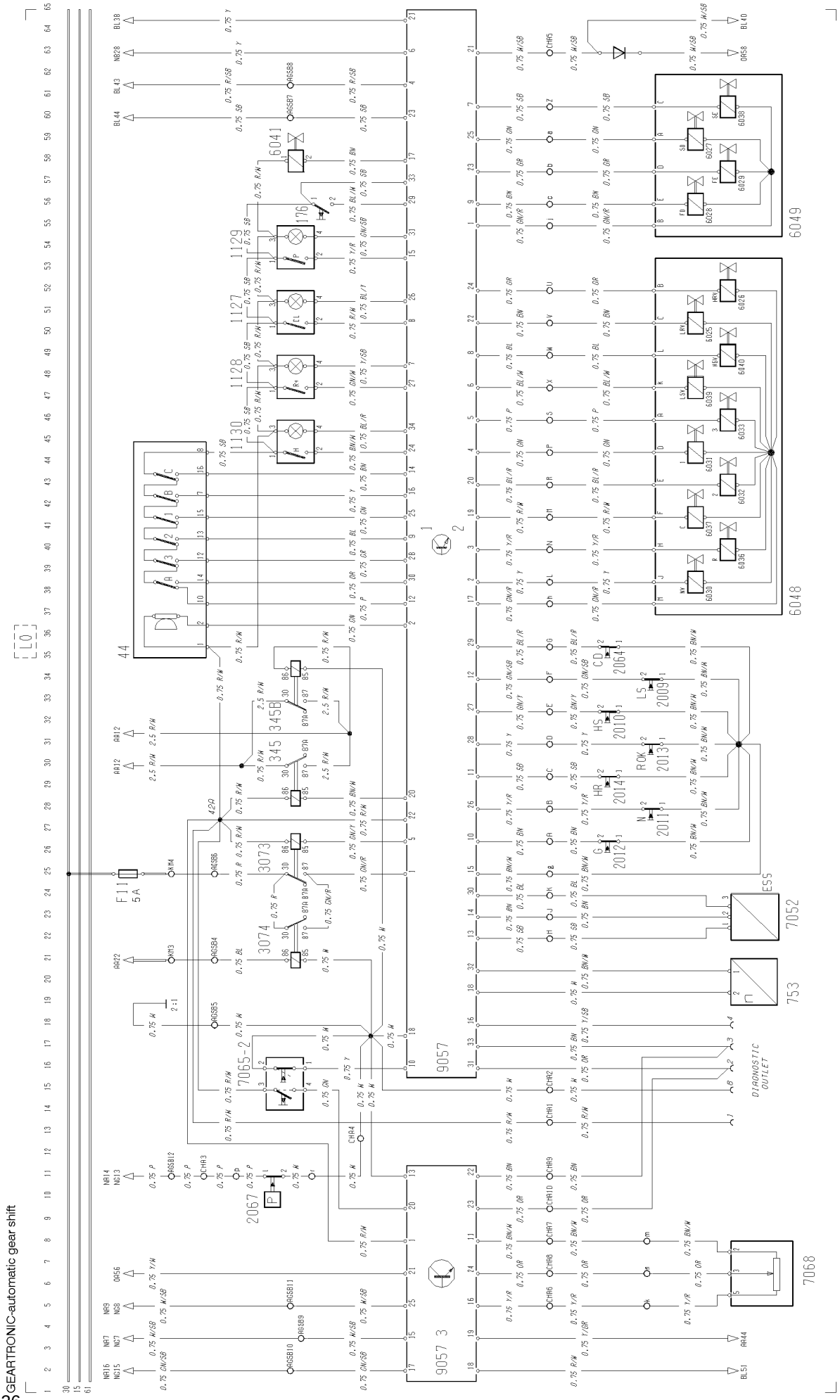
F11
5A
44
1130
1128
1127
1129
176
6041
3073
3074
3458
345
7065-2
2067
9057
9057 3
6048
6049
2064
2009
2010
2013
2014
2011
2012
7052
753
7068
DIAGNOSTIC OUTLET
T3008092

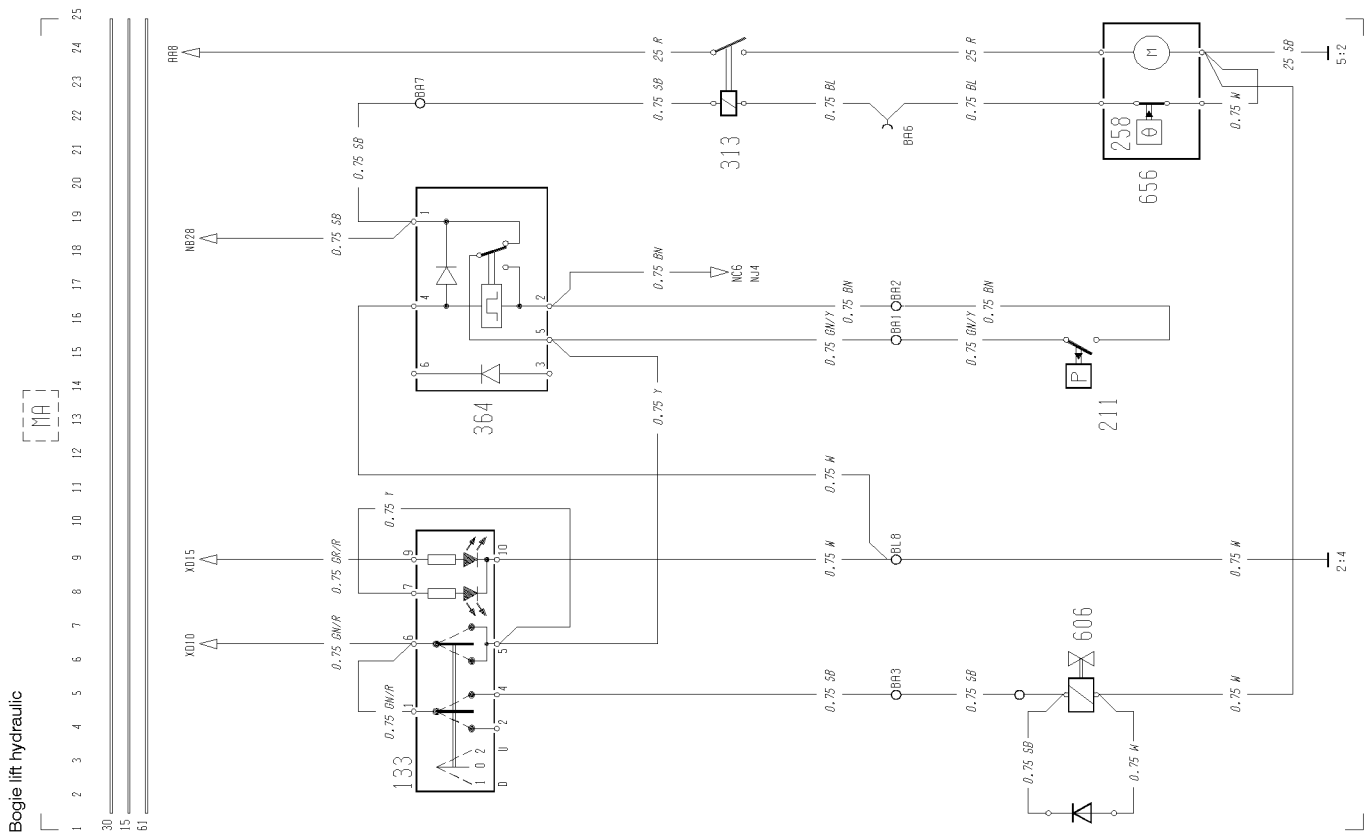
Bogie lift hydraulic
MA
30
15
61
AR8
NB28
XD15
XD10
BA7
0.75 SB
0.75 GR/R
0.75 GN/R
0.75 Y
0.75 BN
0.75 GN/Y
0.75 W
0.75 BL
25 R
25 SB
BA6
BA1
BA2
BL8
BA3
NC6
NU4
313
364
133
258
656
211
606
5:2
2:4
T3008093

Bogie lift hydralic, with axle load limiter

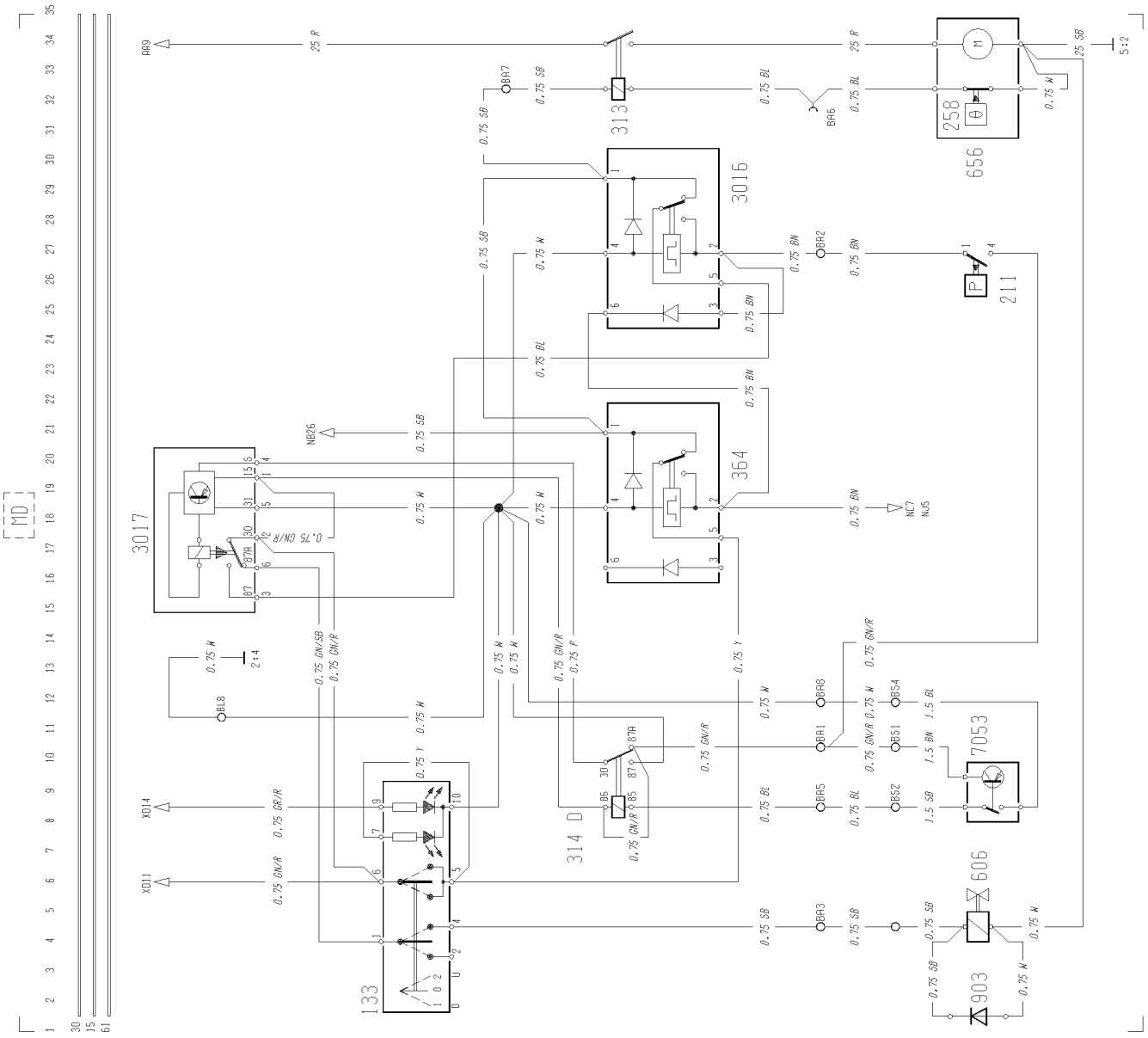

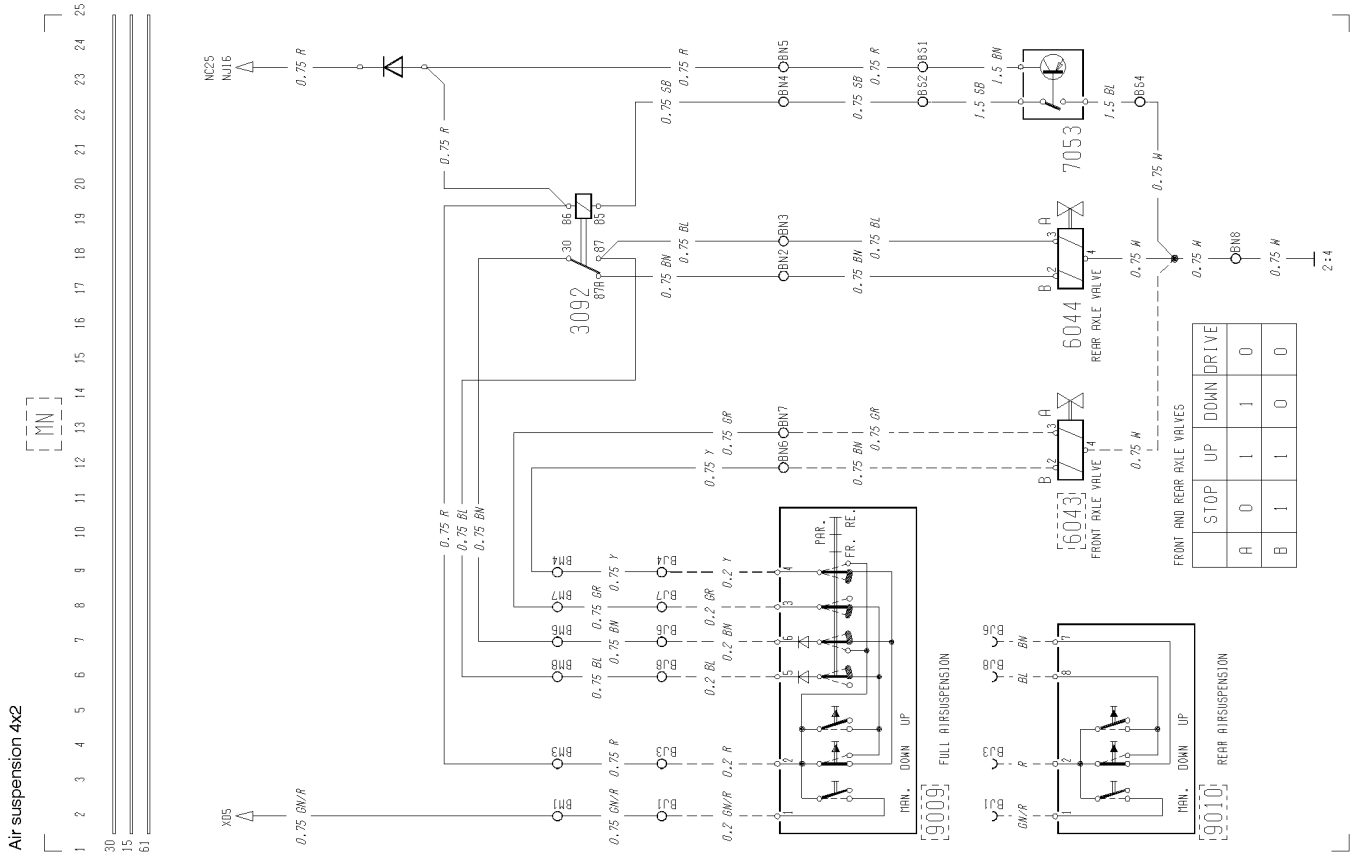
Air suspension 4x2
MN
NC25
NJ16
XD5
3092
7053
6044
REAR AXLE VALVE
6043
FRONT AXLE VALVE
FRONT AND REAR AXLE VALVES
STOP UP DOWN DRIVE
A 0 1 1 0
B 1 1 0 0
PAR.
FR. RE.
MAN. DOWN UP
9009
FULL AIRSUSPENSION
9010
REAR AIRSUSPENSION
2:4

T3008095

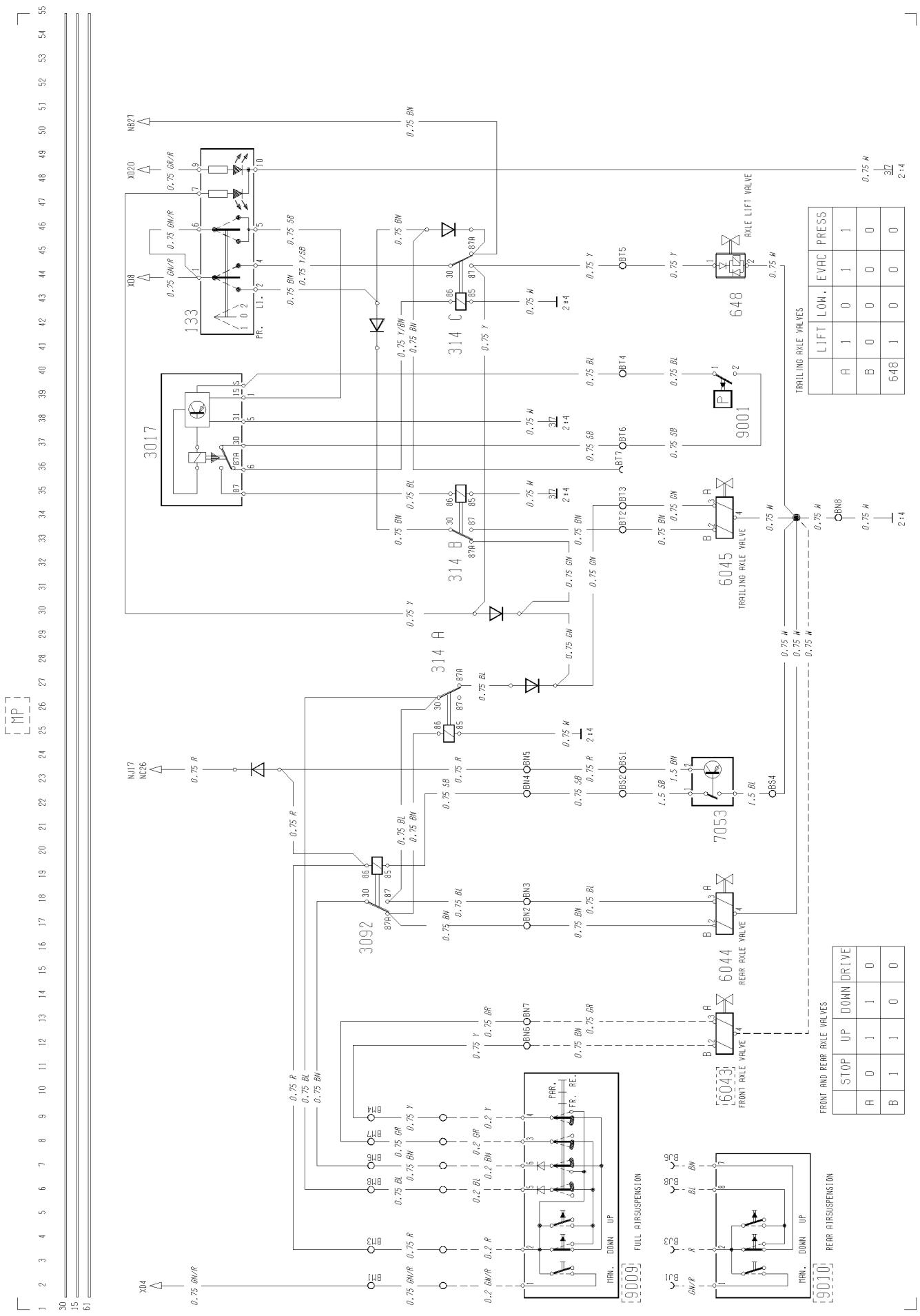
133
3017
314 C
314 B
314 A
648
AXLE LIFT VALVE
9001
6045
TRAILING AXLE VALVE
7053
3092
6044
REAR AXLE VALVE
6043
FRONT AXLE VALVE
9009
FULL AIRSUSPENSION
9010
REAR AIRSUSPENSION
MAN.
DOWN
UP
TRAILING AXLE VALVES
LIFT LOW. EVAC PRESS
A 1 0 1 1
B 0 0 0 0
648 1 0 0 0
FRONT AND REAR AXLE VALVES
STOP UP DOWN DRIVE
A 0 1 1 0
B 1 1 0 0
MP
T3008096

Air suspension 6x2, bogie lift, < 15 tonnes with time limitation

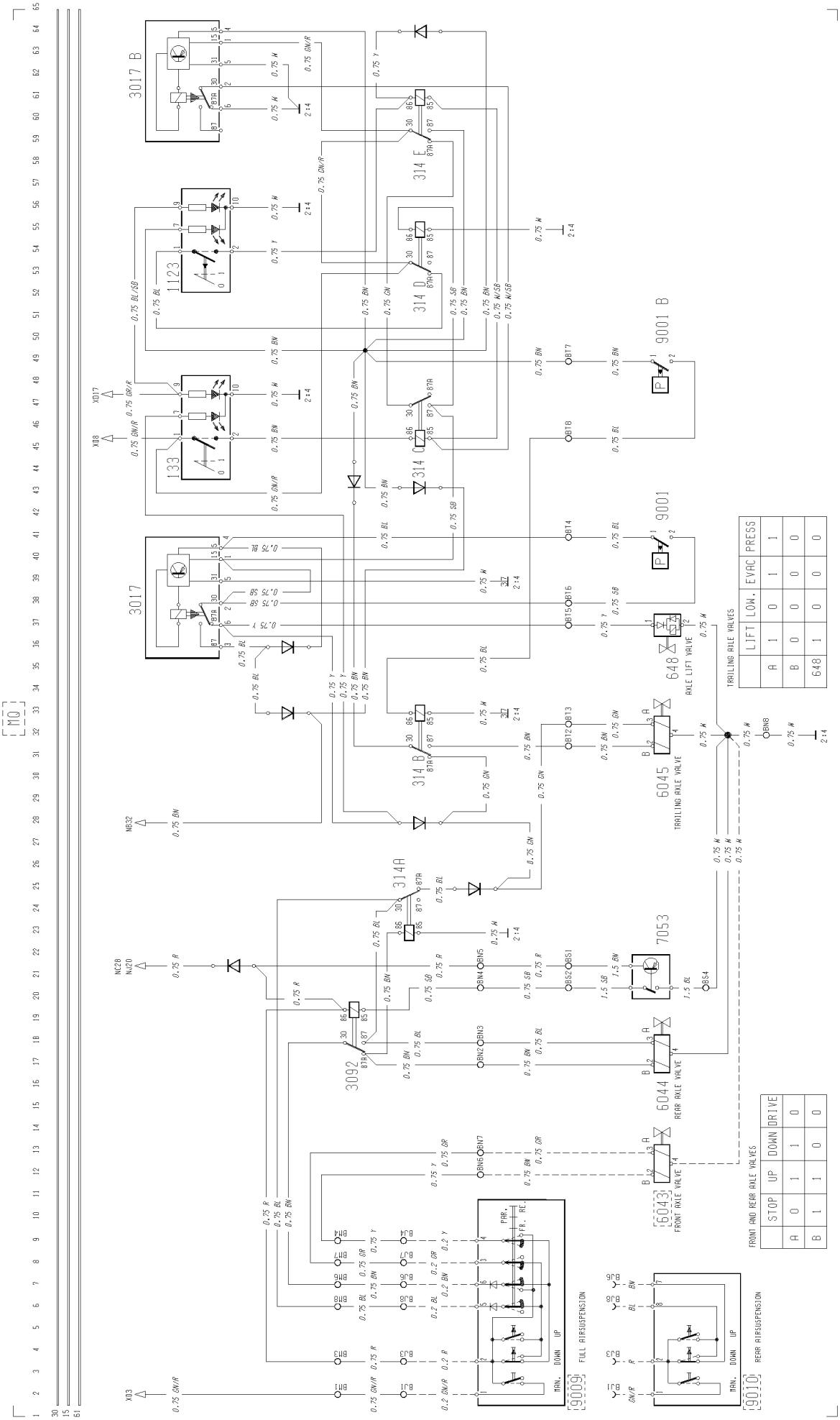

T3008097

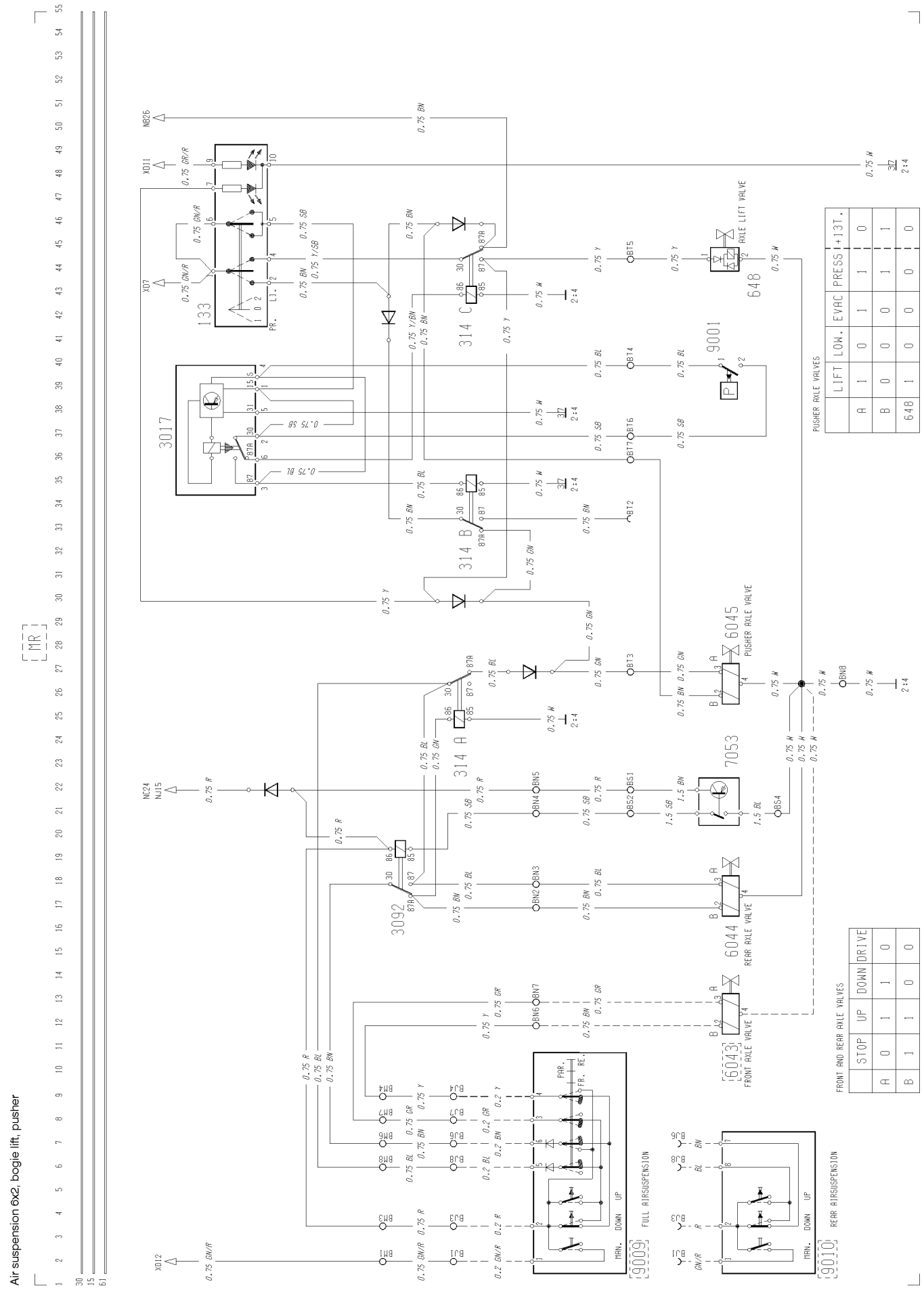

Air suspension 6x2, bogie lift, pusher

T3008098

Air suspension 6x2, bogie lift, 15 tonnes

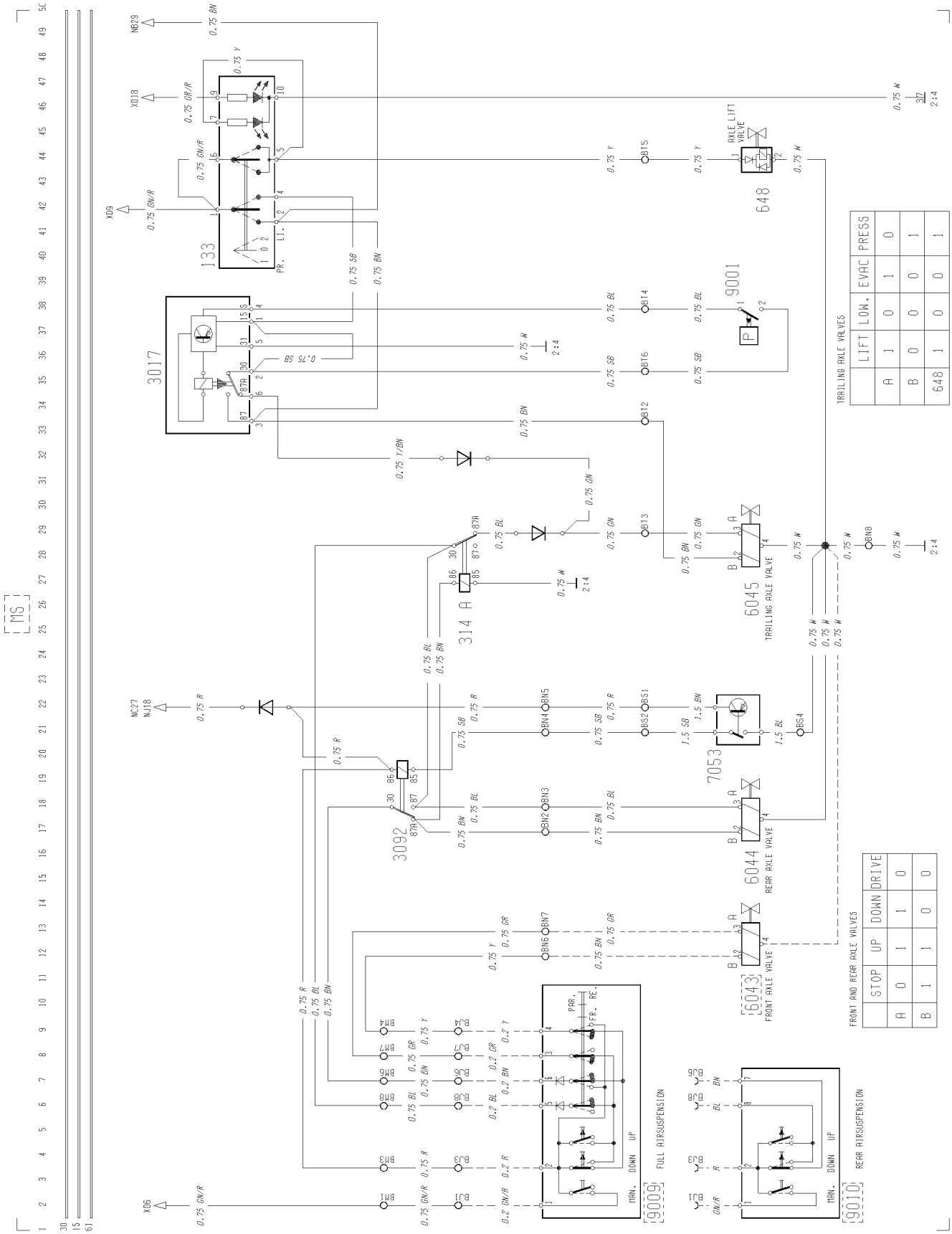

	LIFT	LOW.	EVAC	PRESS
A	1	0	1	0
B	0	0	0	1
648	1	0	0	1

	STOP	UP	DOWN	DRIVE
A	0	1	1	0
B	1	1	0	0

T3008099

AIR-DUMP with time limitation (RADT-A8)

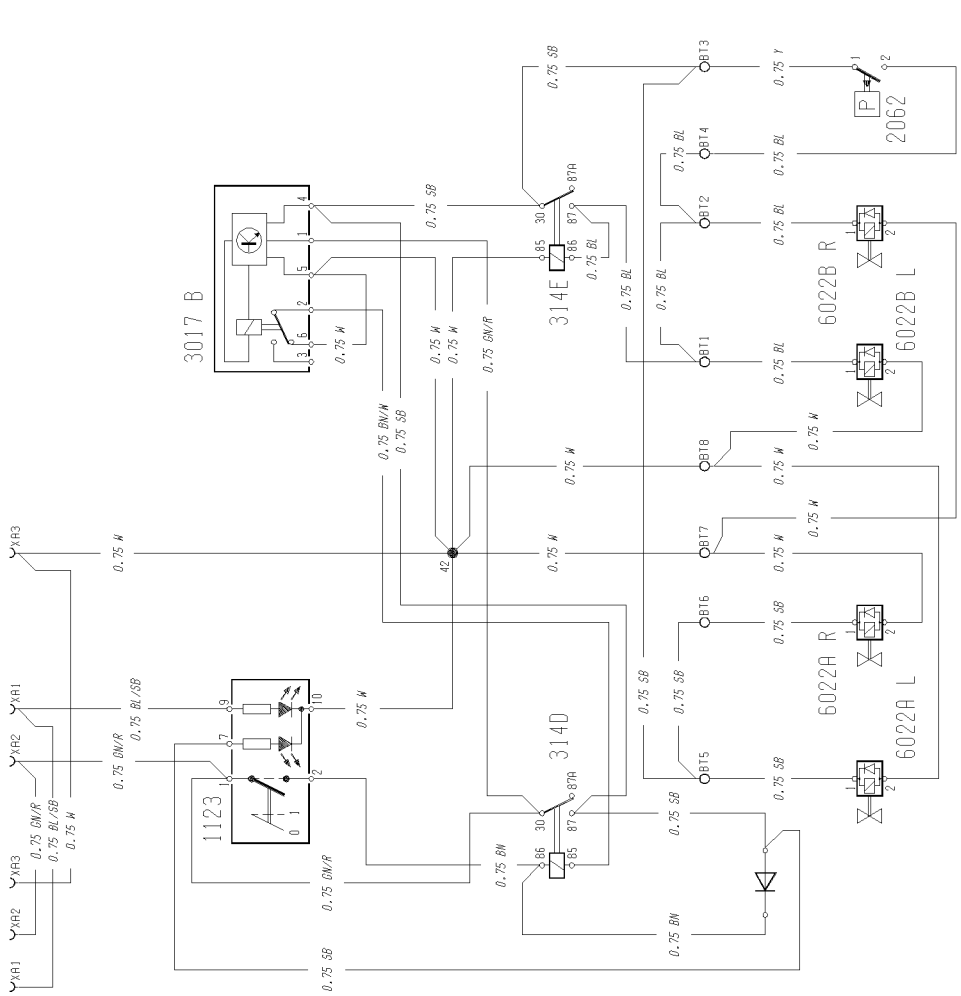

AIR-DUMP (RADT-A8)

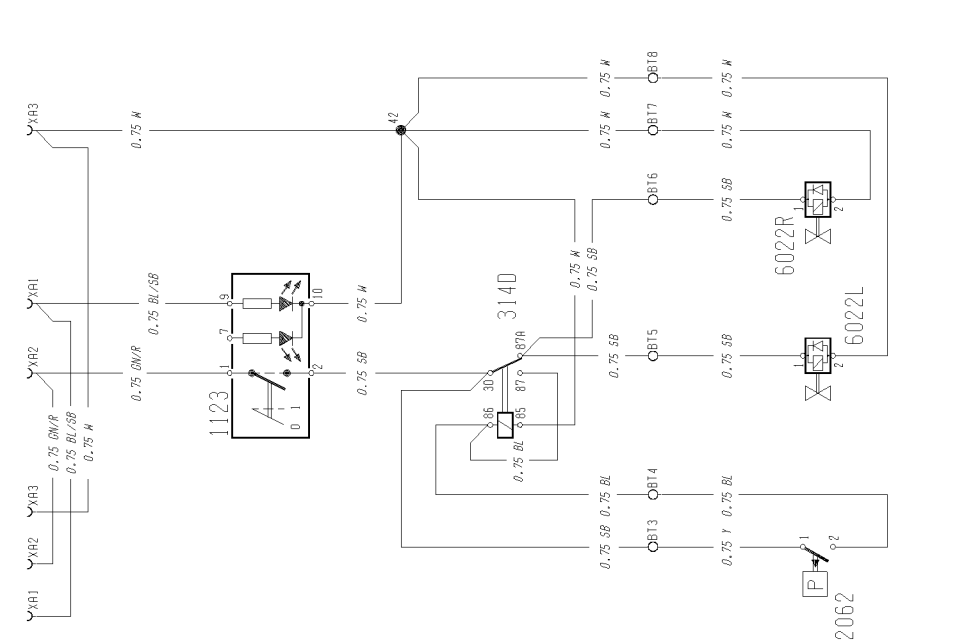

T3008100

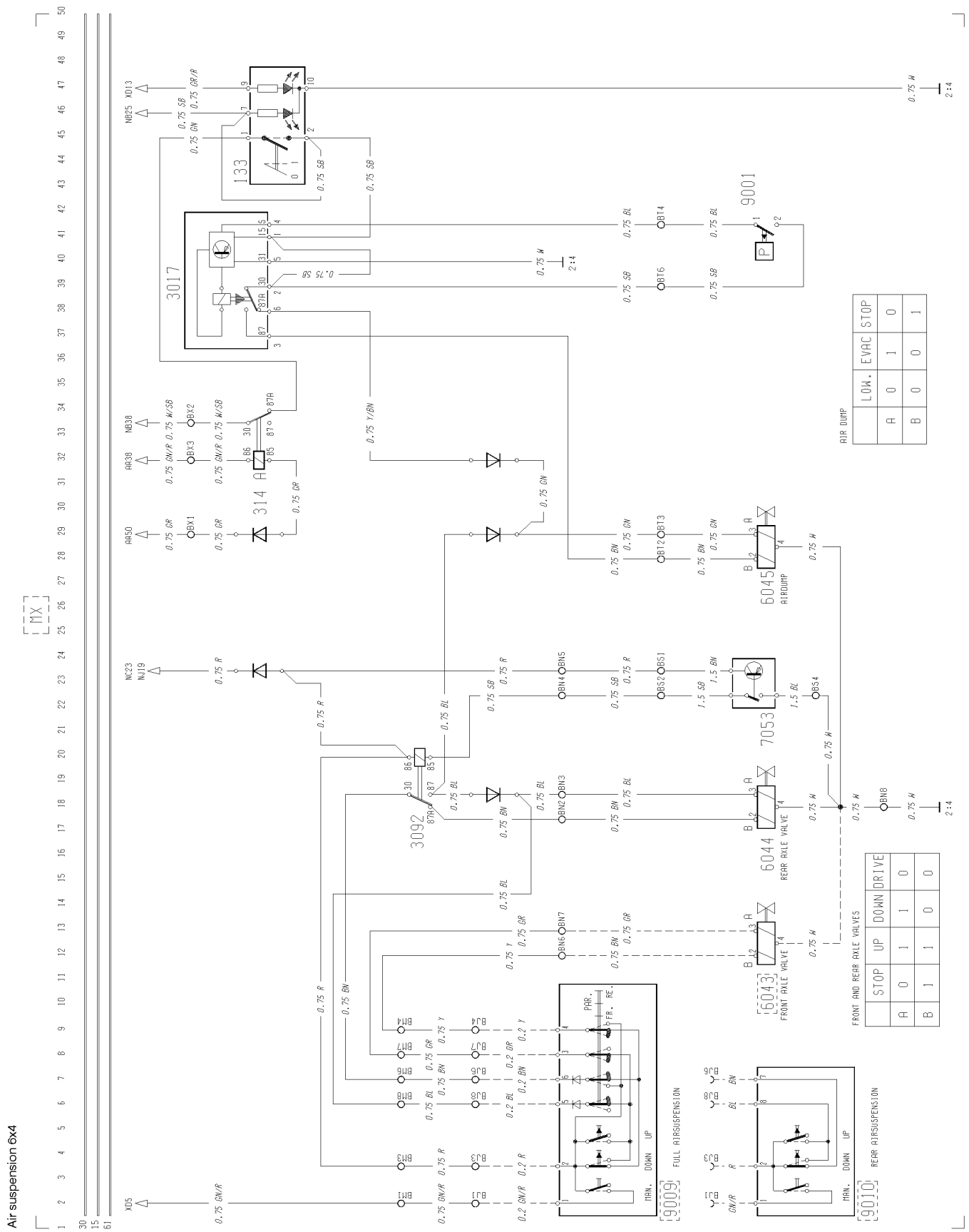
Air suspension 6x4
133
3017
314
3092
9001
6045
AIRDUMP
7053
6044
REAR AXLE VALVE
6043
FRONT AXLE VALVE
9009
FULL AIRSUSPENSION
9010
REAR AIRSUSPENSION
AIR DUMP
LOW. EVAC STOP
FRONT AND REAR AXLE VALVES
STOP UP DOWN DRIVE
T3008101

Air suspension 6x4, < 15 tonnes with time limitation

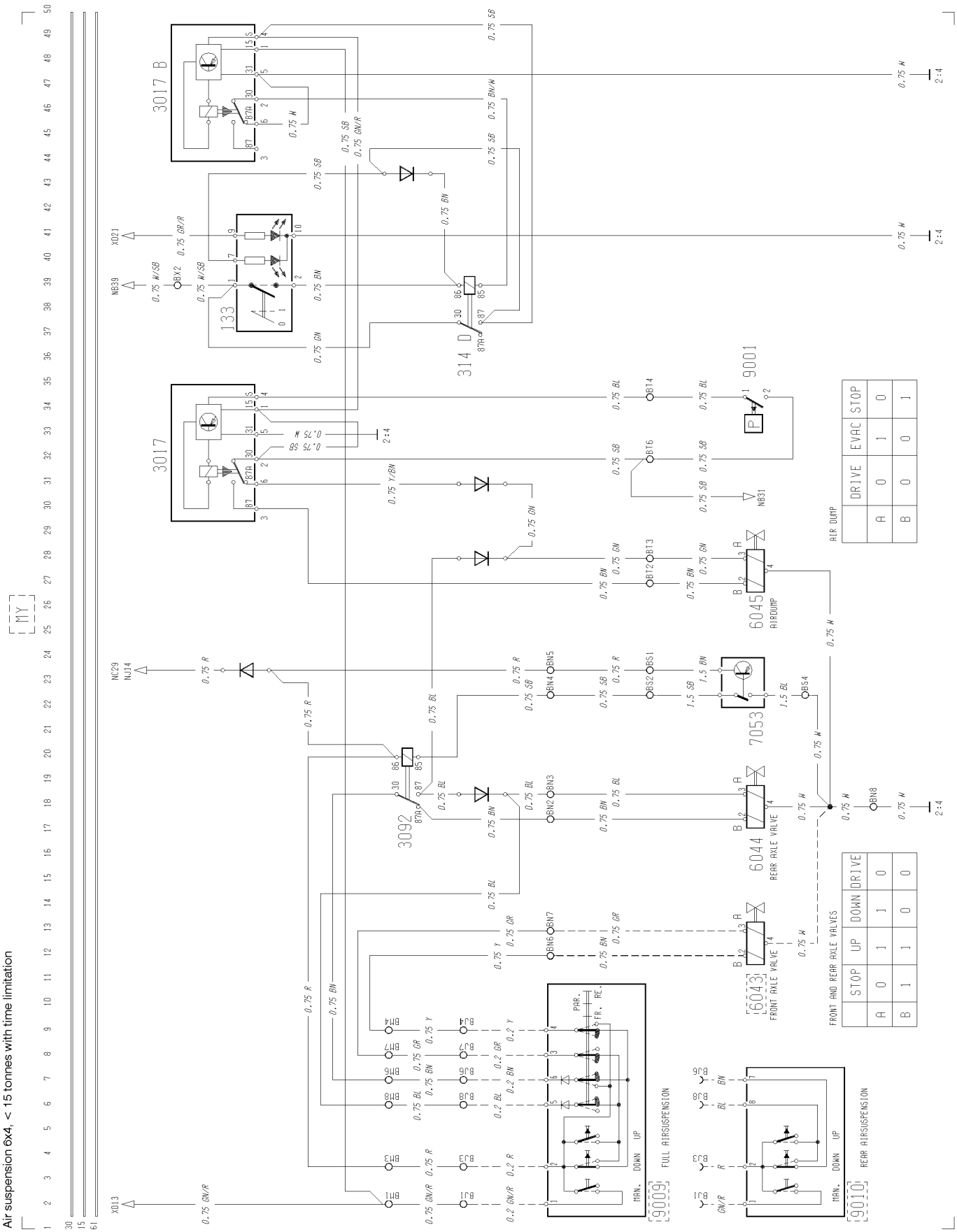

T3008102

Instrument LHS unit (standard design)

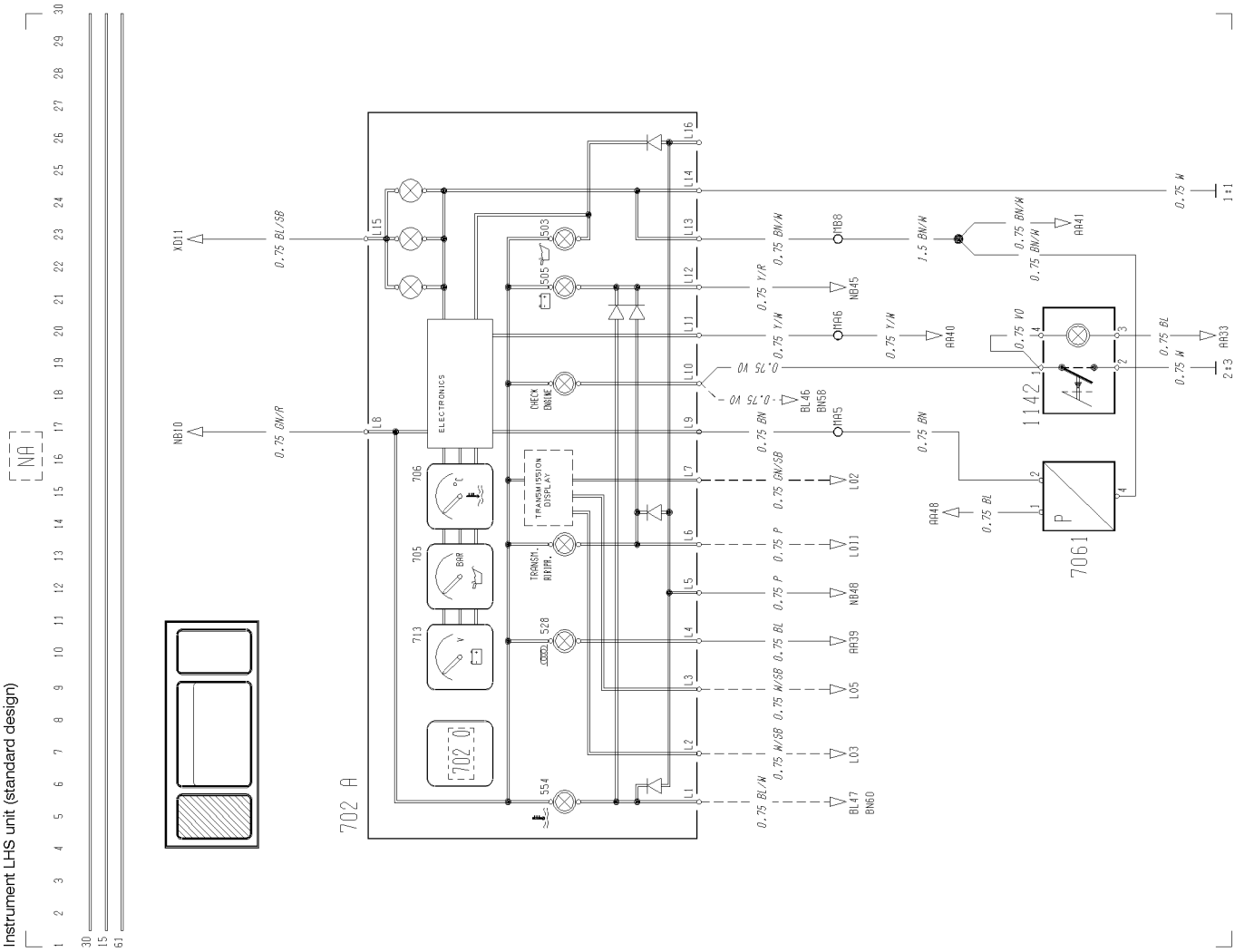

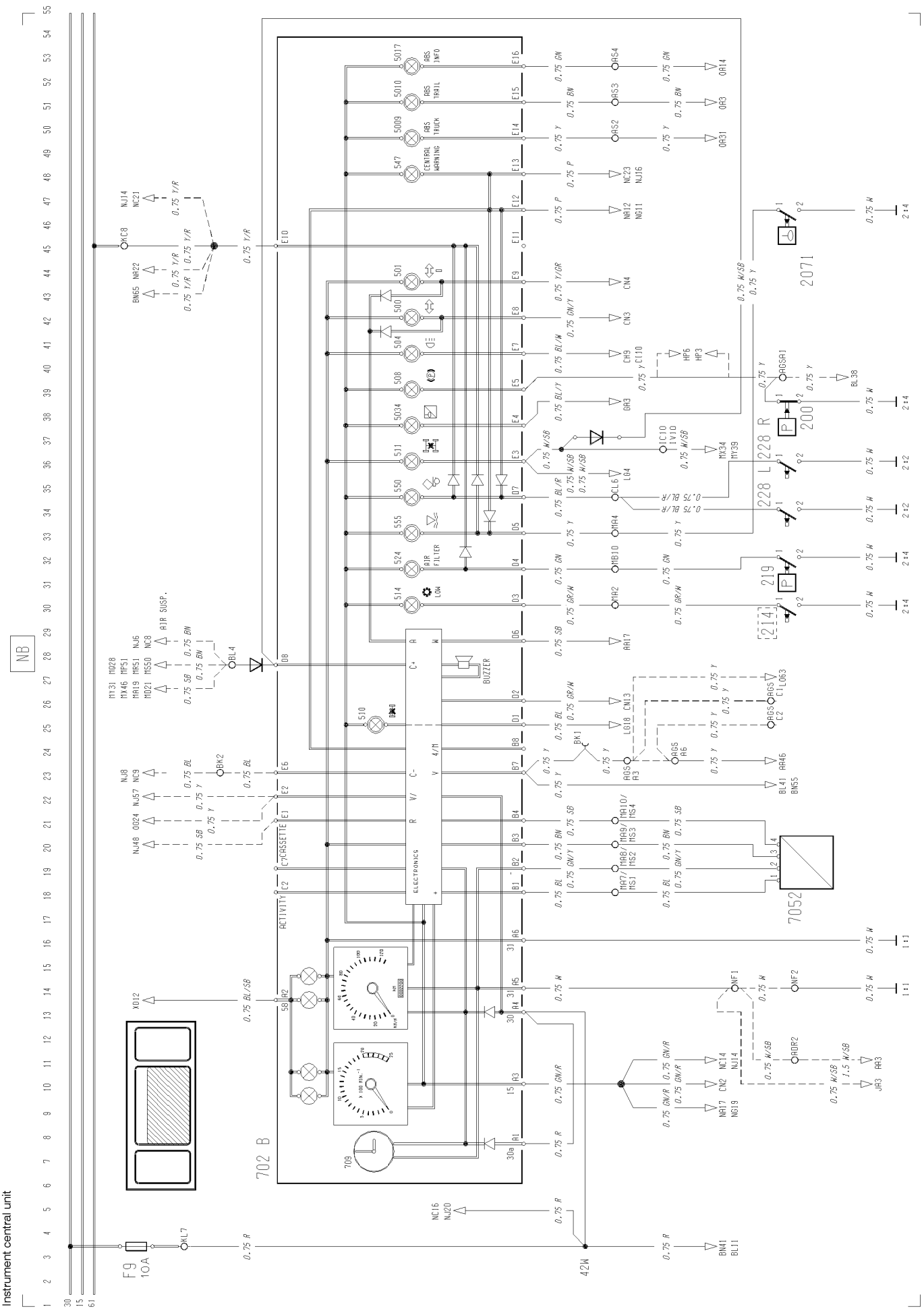
702 B
ELECTRONICS
BUZZER
ACTIVITY
C7CASSETTE
AIR SUSP.
AIR FILTER
LOW
CENTRAL WARNING
ABS TRUCK
ABS TRAIL
ABS INFO
228 L
2071
200
219
7052
42W
F9 10A
T3008104

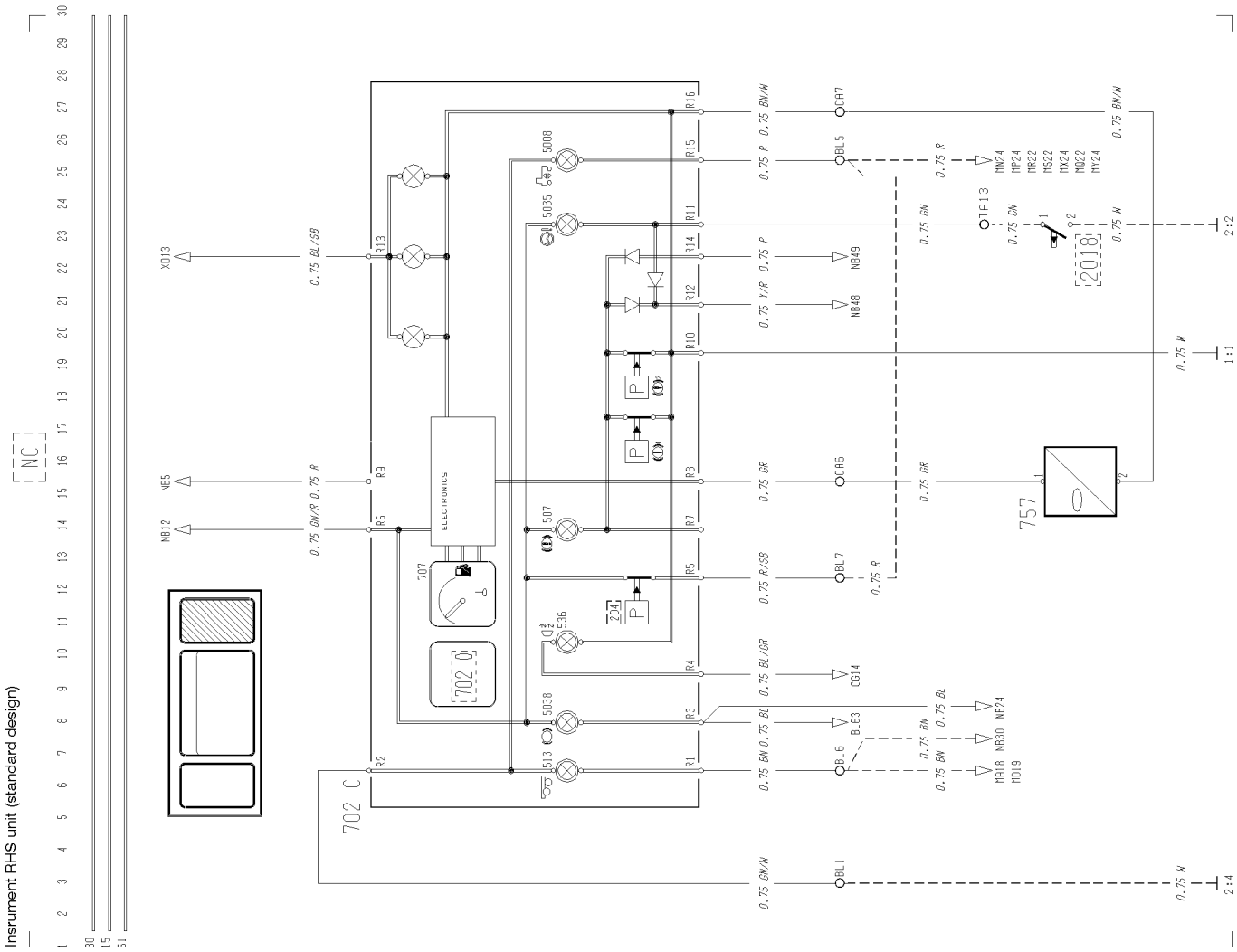
Insrument RHS unit (standard design)
NC
ELECTRONICS
702 C
702 0
707
757
2018
204
T3008105

Instrument LHS unit (DIS)

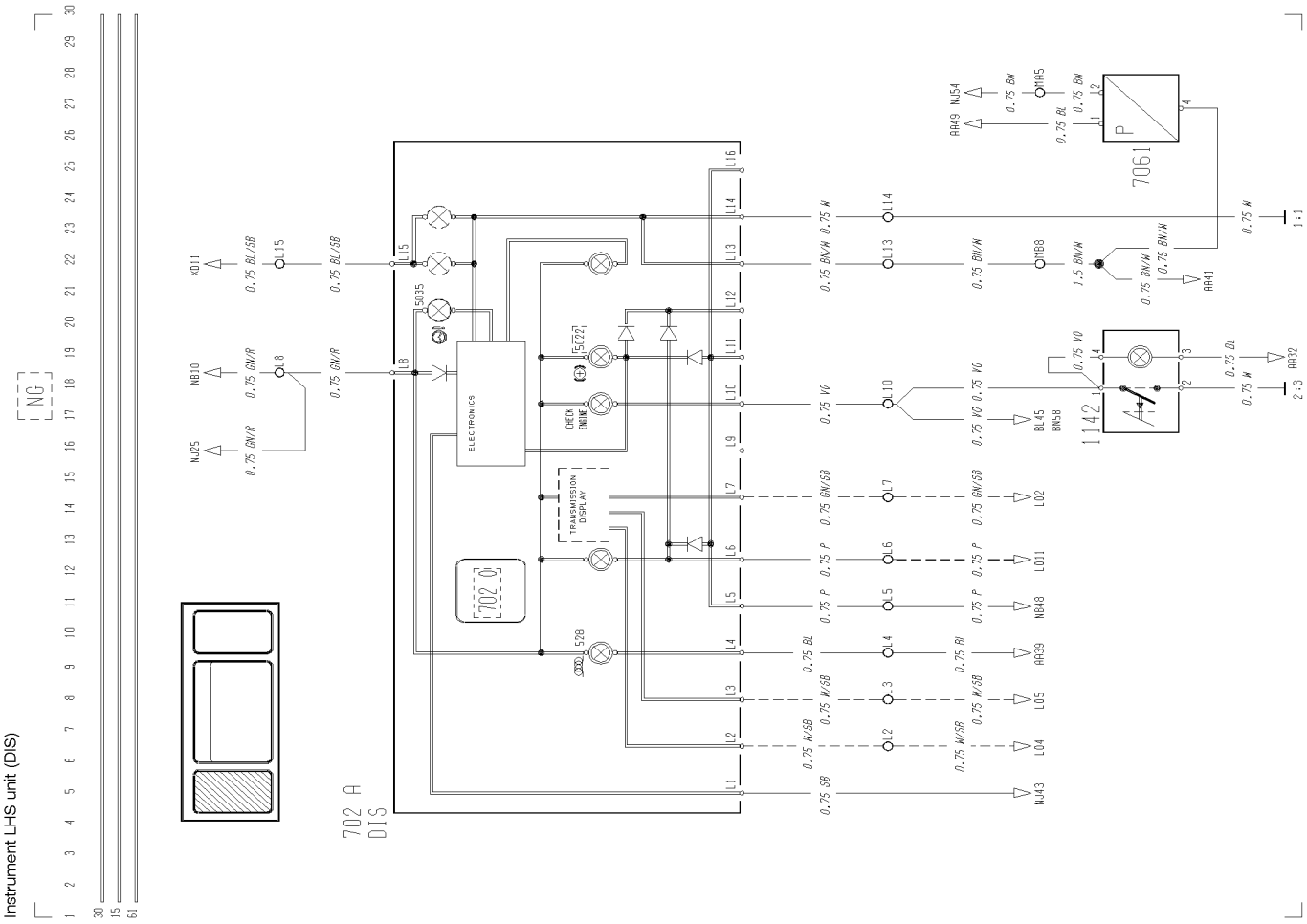

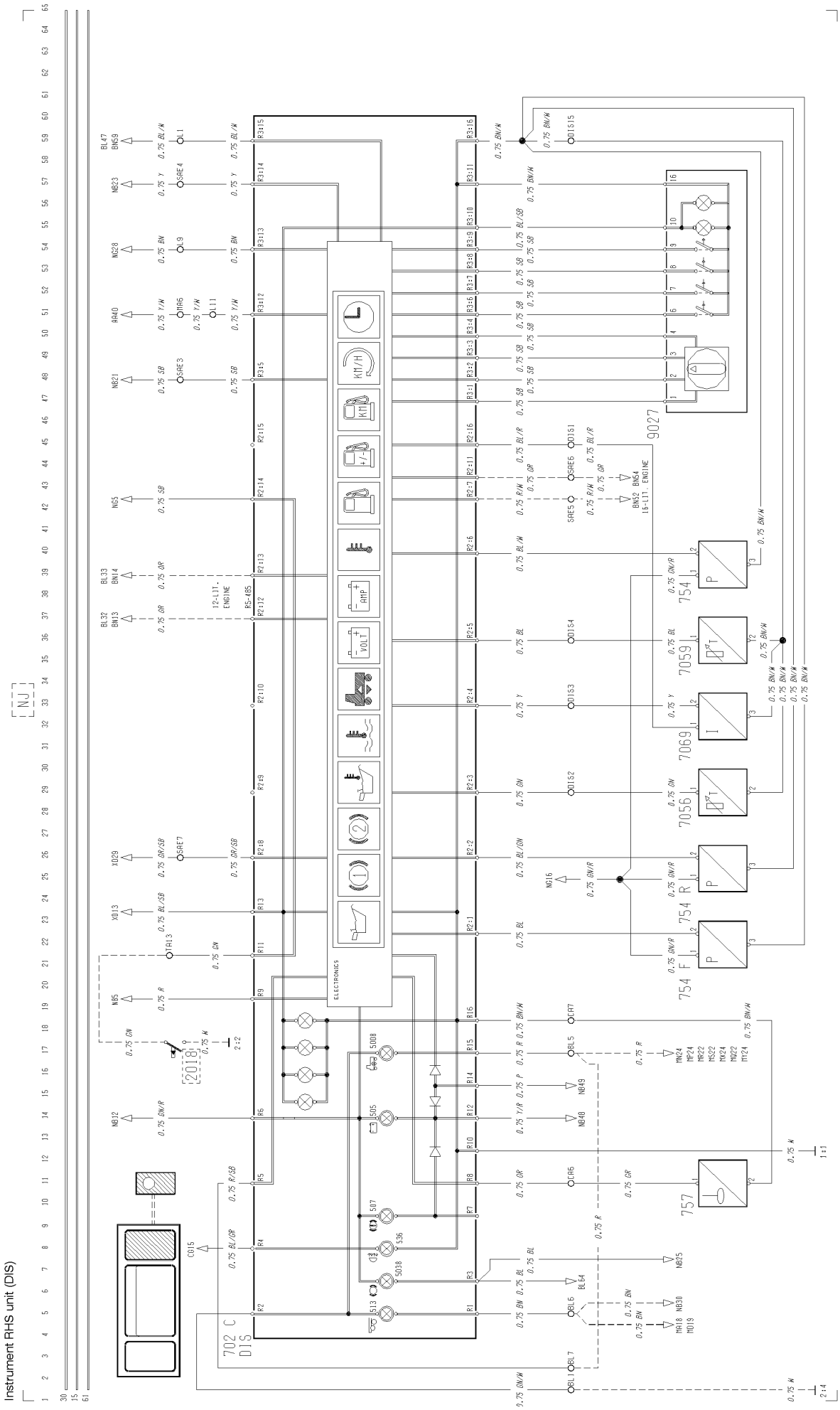
Instrument RHS unit (DIS)
ELECTRONICS
VOLT
AMP
KM/H
KM
+/-
12-LIT. ENGINE
R5-R85
16-LIT. ENGINE
9027
754
7059
7069
7056
757
702 C
DIS

T3008107

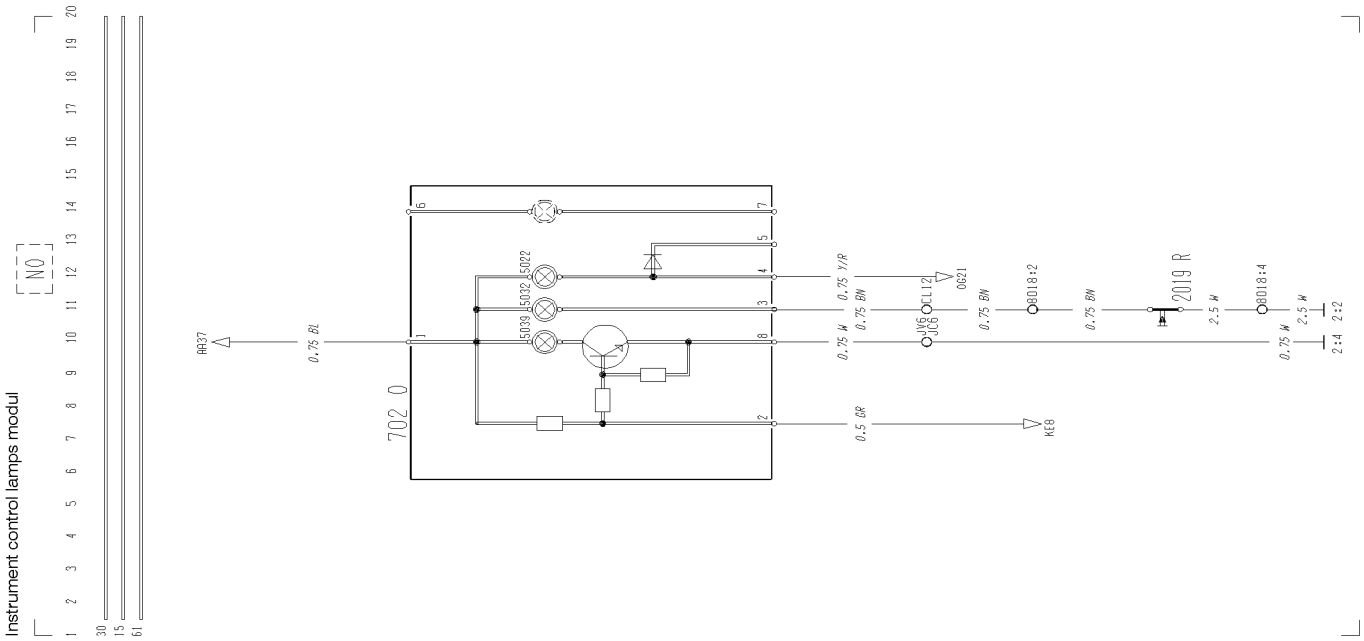
Instrument control lamps modul
N0
30
15
61
AA37
0.75 BL
702 0
5039
5032
5022
0.75 YIR
0.75 BW
0.75 W
0.5 GR
JW6
JC6
CL12
0621
KE8
0018:2
0.75 BW
2019 R
2.5 W
0018:4
0.75 W
2.5 W
2:4
2:2

T3008108

ABS, anti-lock brakes

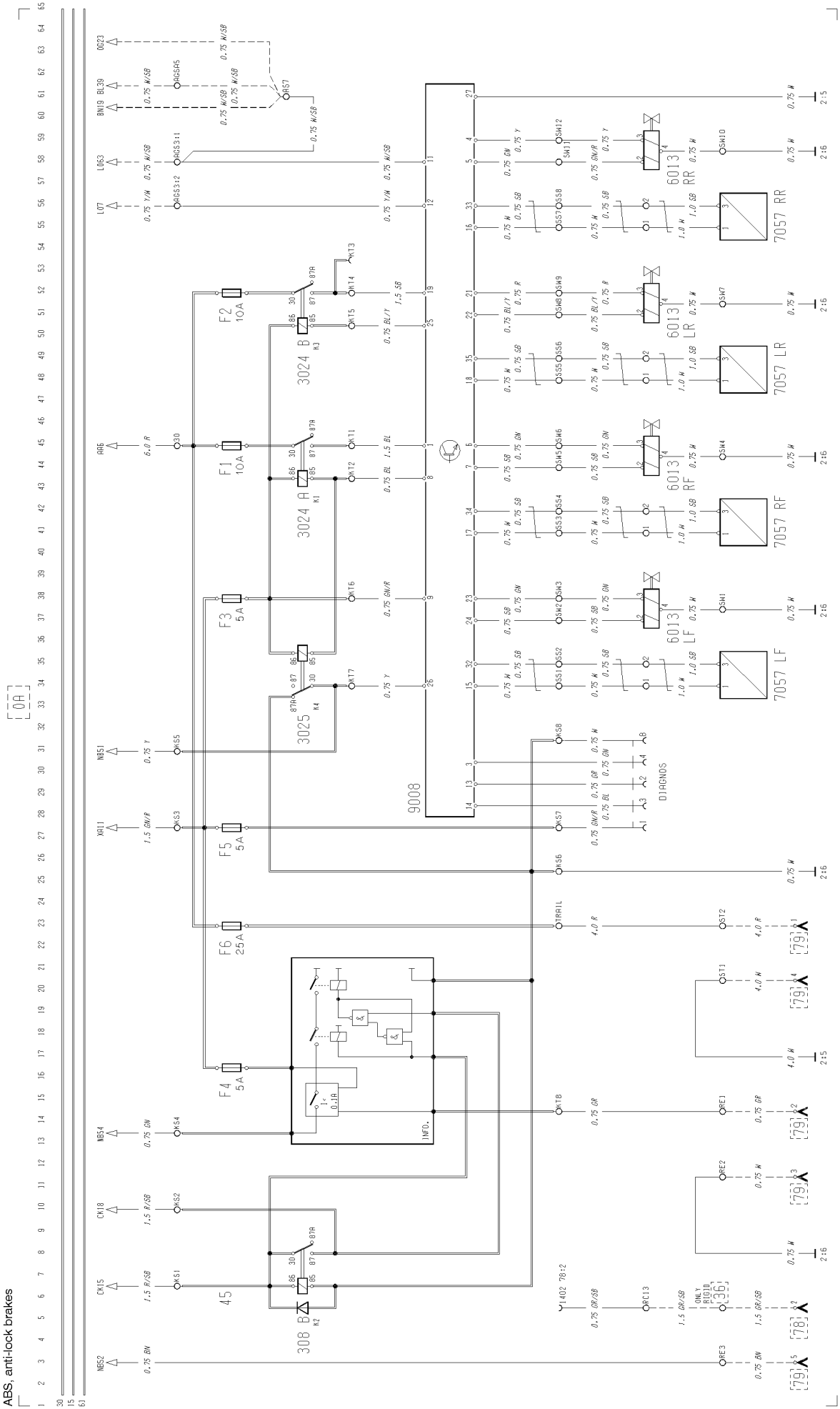

T3008109

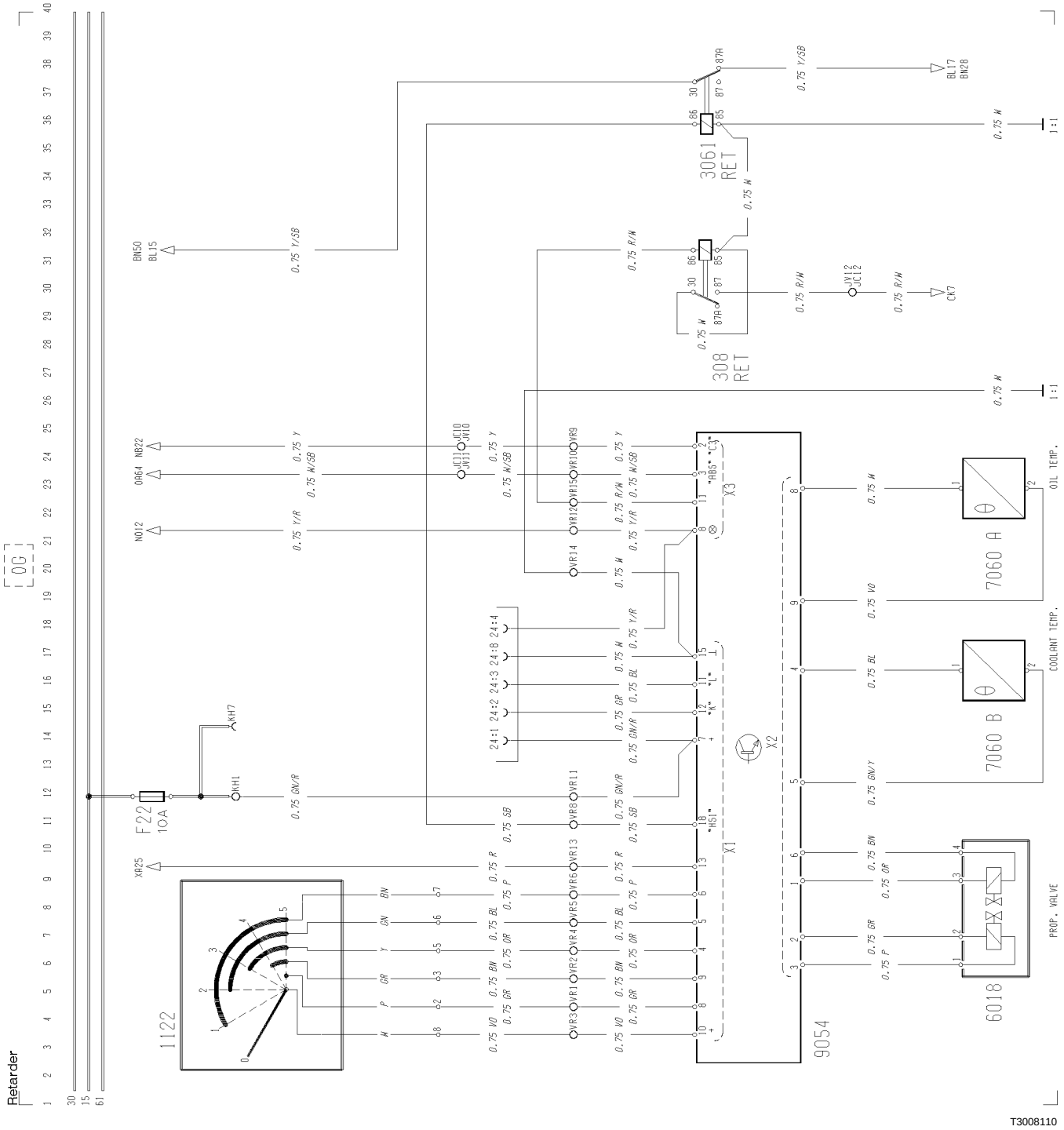
Retarder
1122
F22
10A
KH7
KH1
XR25
NB22
OR64
NO12
BN50
BL15
0.75 GN/R
0.75 Y
0.75 W/SB
0.75 Y/R
0.75 Y/SB
0.75 R/W
0.75 W
0.75 R
0.75 P
0.75 BL
0.75 OR
0.75 BN
0.75 GR
0.75 VO
0.75 GN/Y
0.75 SB
0.75 BL
0.75 GR/R
0.75 GN/R
24:1 24:2 24:3 24:8 24:4
3061
RET
308
RET
CK7
X1
X2
X3
9054
7060 A
7060 B
6018
OIL TEMP.
COOLANT TEMP.
PROP. VALVE
T3008110

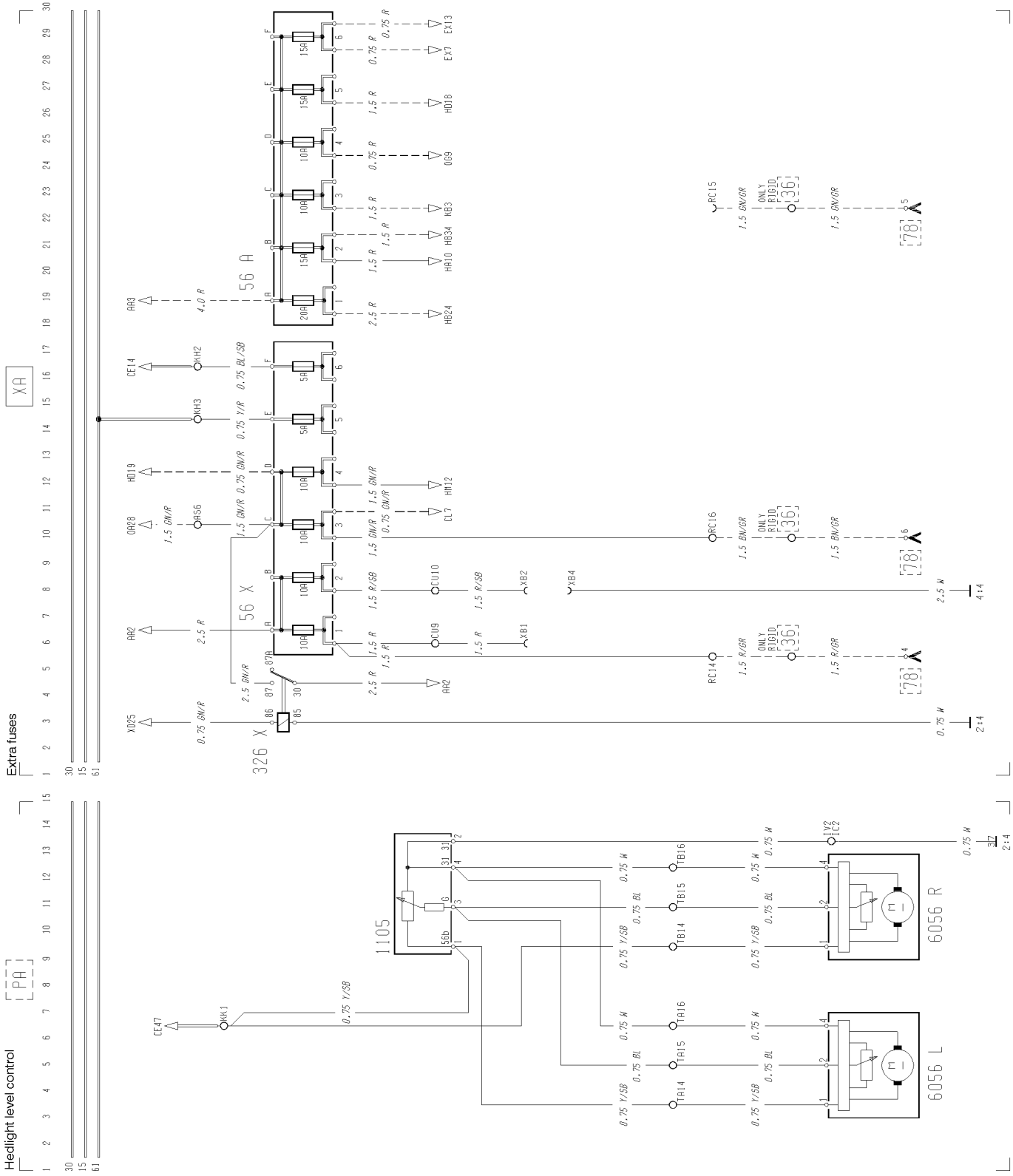
Extra fuses
Headlight level control
XA
56 A
56 X
326 X
1105
6056 R
6056 L
T3008111

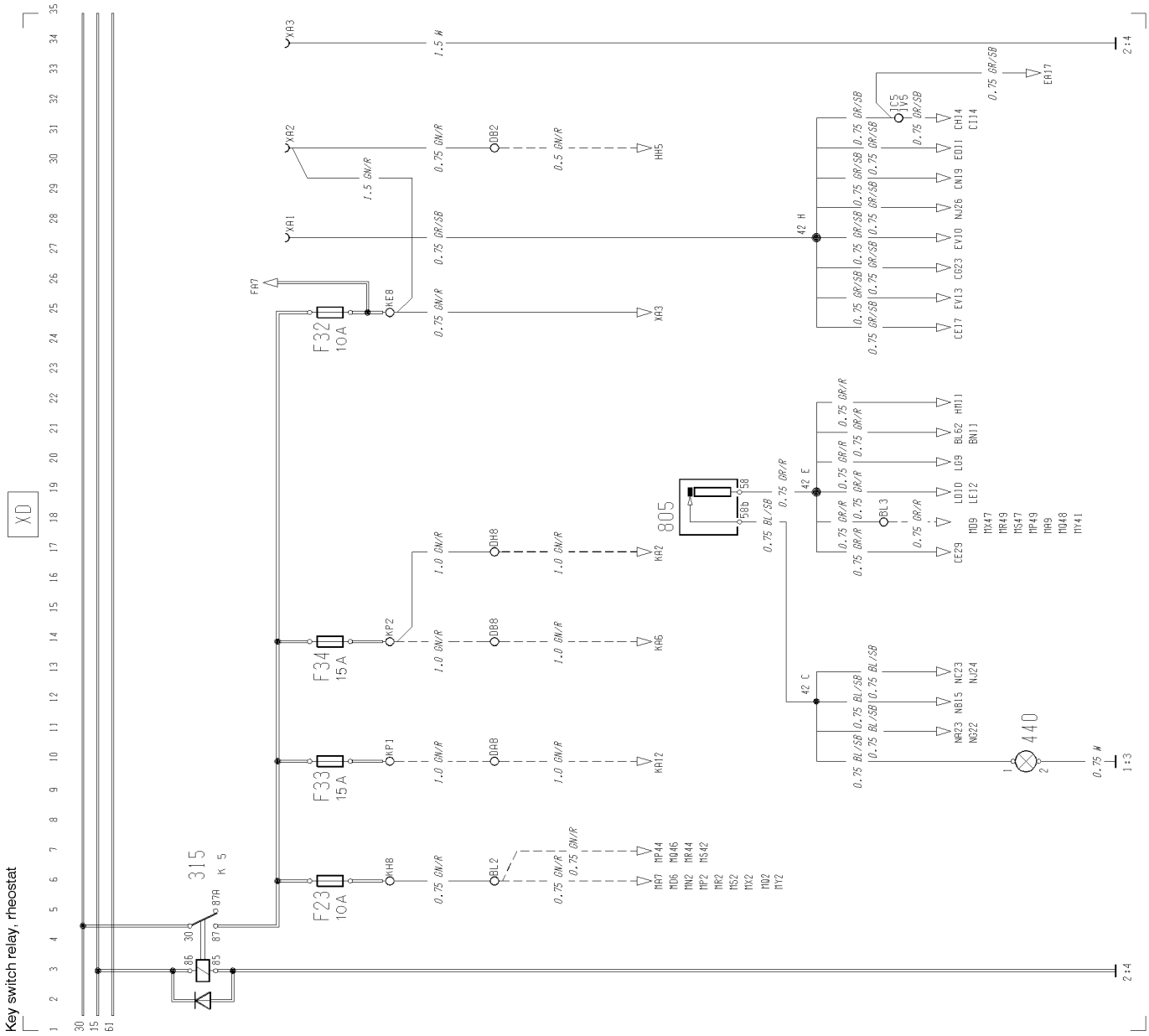
XD
Key switch relay, rheostat
315
K 5
F23
10A
F33
15A
F34
15A
F32
10A
805
440
T3008112

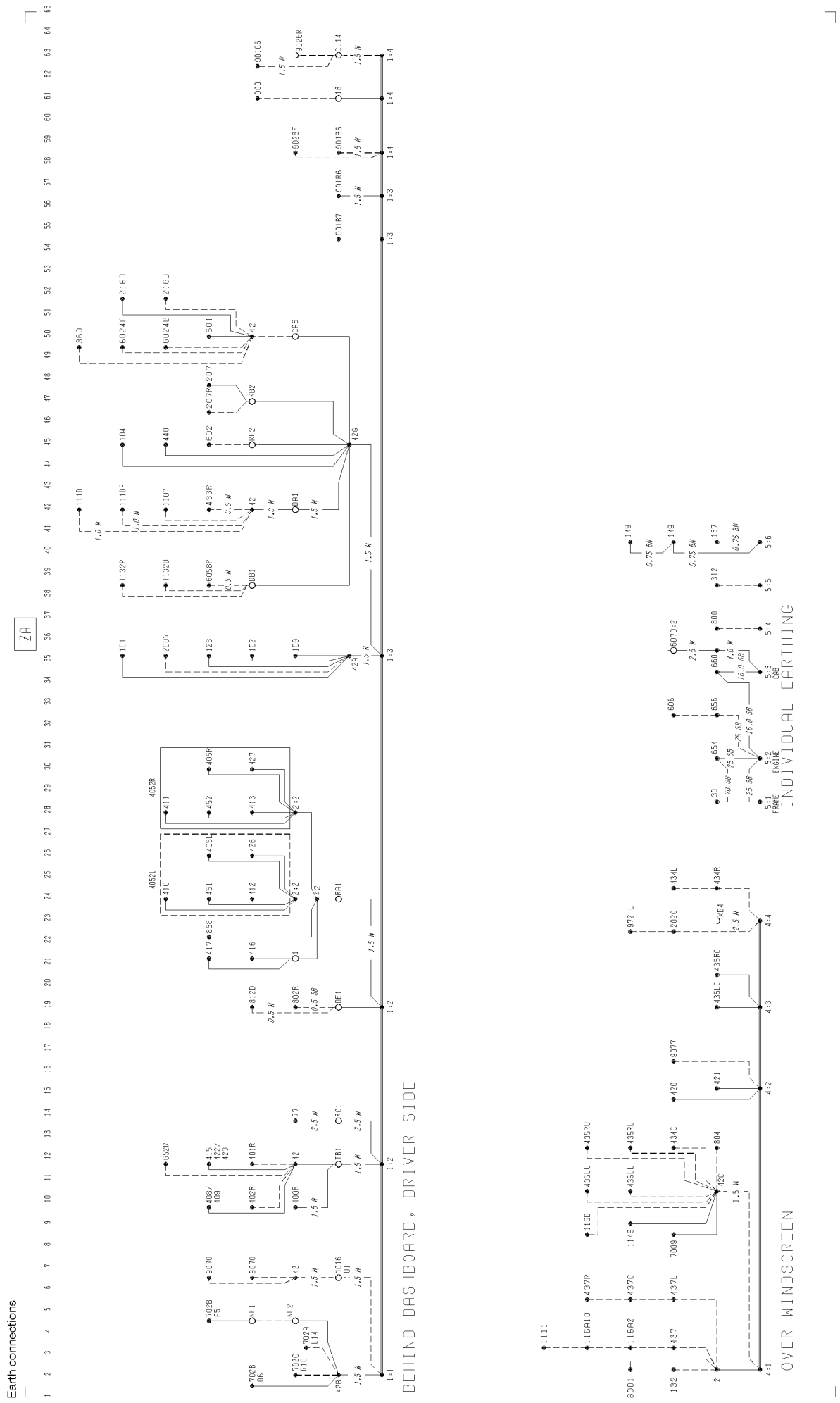
Earth connections
ZA
BEHIND DASHBOARD, DRIVER SIDE
OVER WINDSCREEN
INDIVIDUAL EARTHING

T3008113

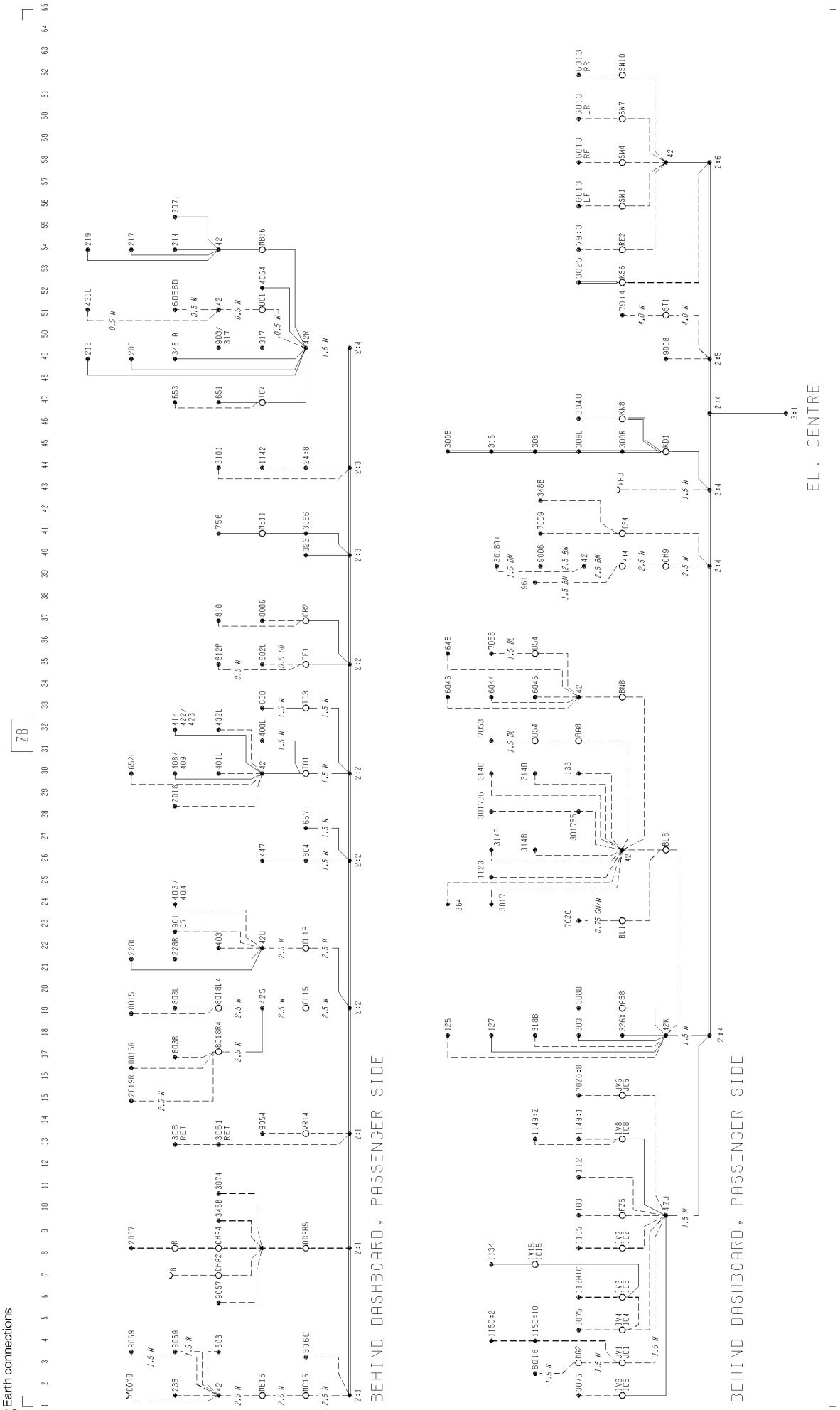

Earth connections

T3008114

Illustration index

-	Windscreen wiper motor	page 50
-	ADR	page 51
-	AERIEL	page 52
1000	Cable harness, instruments	page 53
1006	Cable harness, cab, upper	page 57
1007	Cable harness, cab, lower	page 59
1020	Cable harness, cowl	page 61
1030	Cable harness, engine	page 62
1035	Cable harness, diff. lock	page 66
1037	Cable harness, bogie lift	page 68
1042	Cable harness, tail lights	page 72
1056	Cable harness, air dryer	page 73
1057	Cable harness, chassis	page 74
1063	Cable harness, trailer connection	page 75
1066	Cable harness, Driver Information System (DIS)	page 76
1071	Cable harness, sesor, axle load limiter	page 71
1072	Cable harness, air suspension	page 79
1074	Cable harness, hydralic bogie lift with axle load limiter	page 82
1077	Cable harness, side marking lamp	page 83
1083	Cable harness, door	page 84
1084	Cable harness, cab, ABS	page 86
1085	Cable harness, trailer connection, ABS	page 87
1086	Cable harness, solenoid valve, ABS	page 88
1087	Cable harness, sensor, chassis, ABS	page 88
1096	Cable harness, increasing of drive axle load, “ airdump”	page 89
1407	Cable harness, EDC/cab	page 91
1408	Cable harness, EDC/engine	page 92
1412	Cable harness, Geartronic - gearbox	page 97
1413	Cable harness, Geartronic - cab	page 94
1420	Cable harness speed warning - roof lamps	page 95
1422	Cable harness, Geartronic - chassis	page 96
1454	Cable harness, cab tilt pump	page 98
1468	Cable harness, water separator	page 100
1469	Cable harness, fuel filter heater	page 101

Illustrations

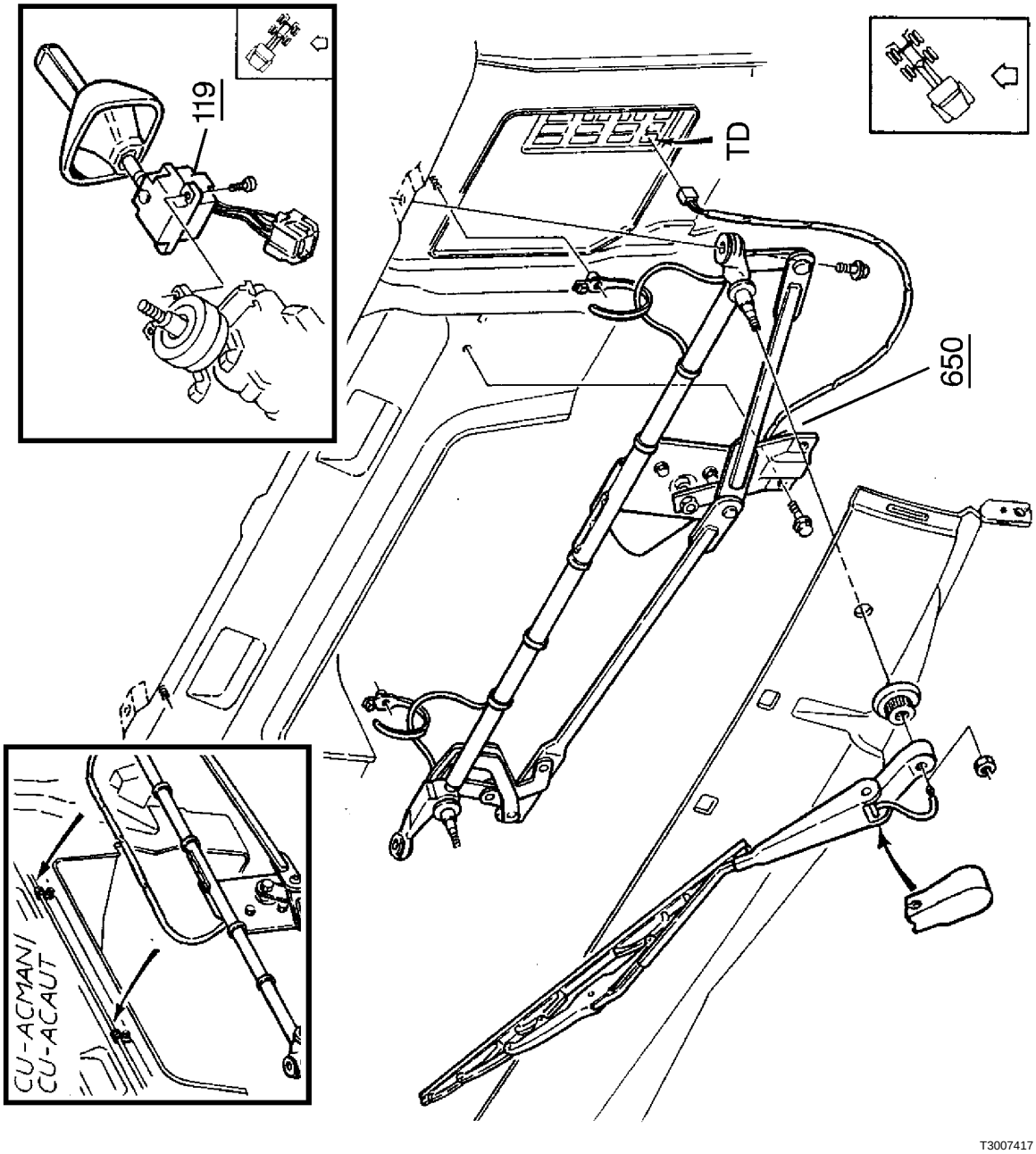

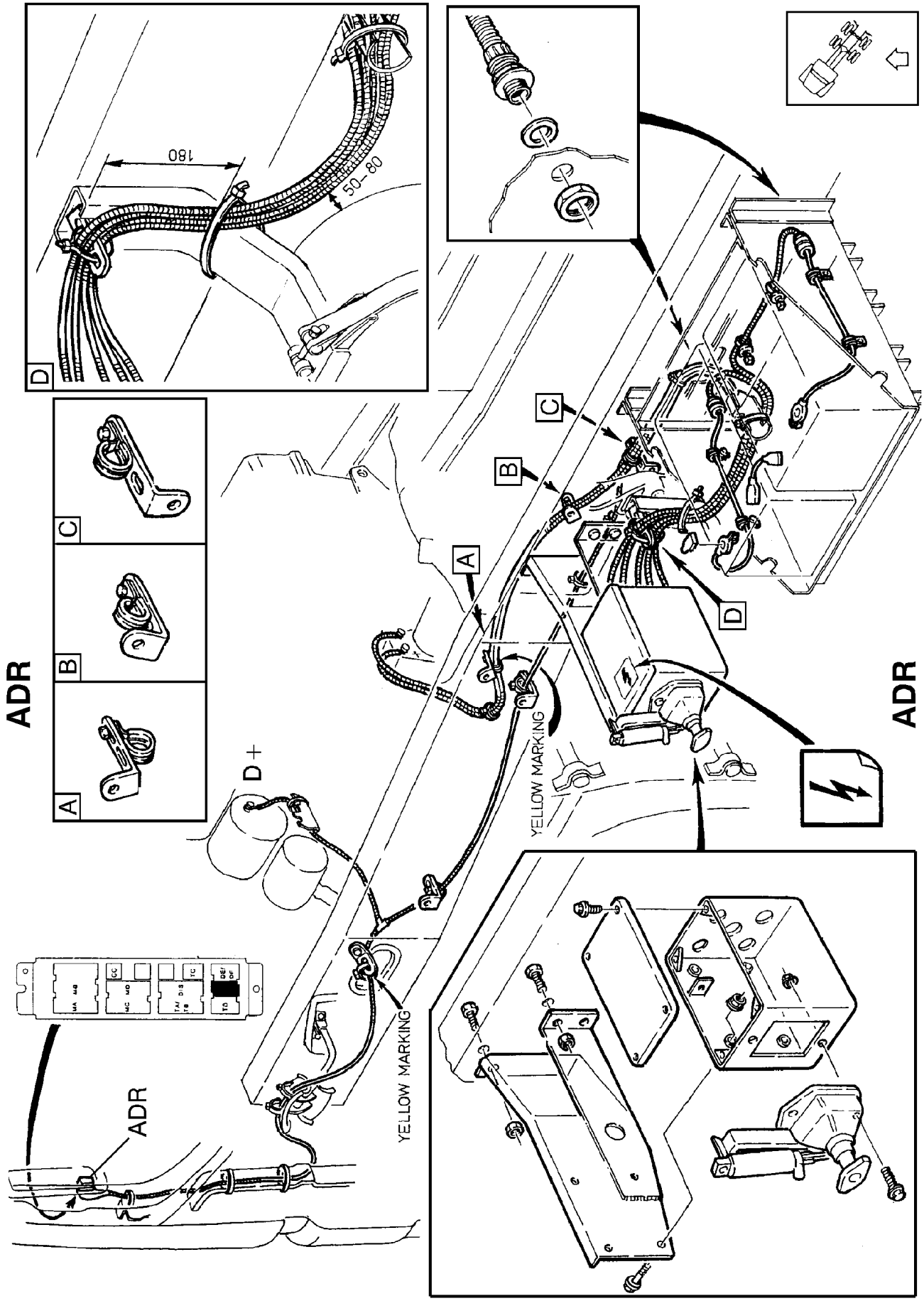

T3007363

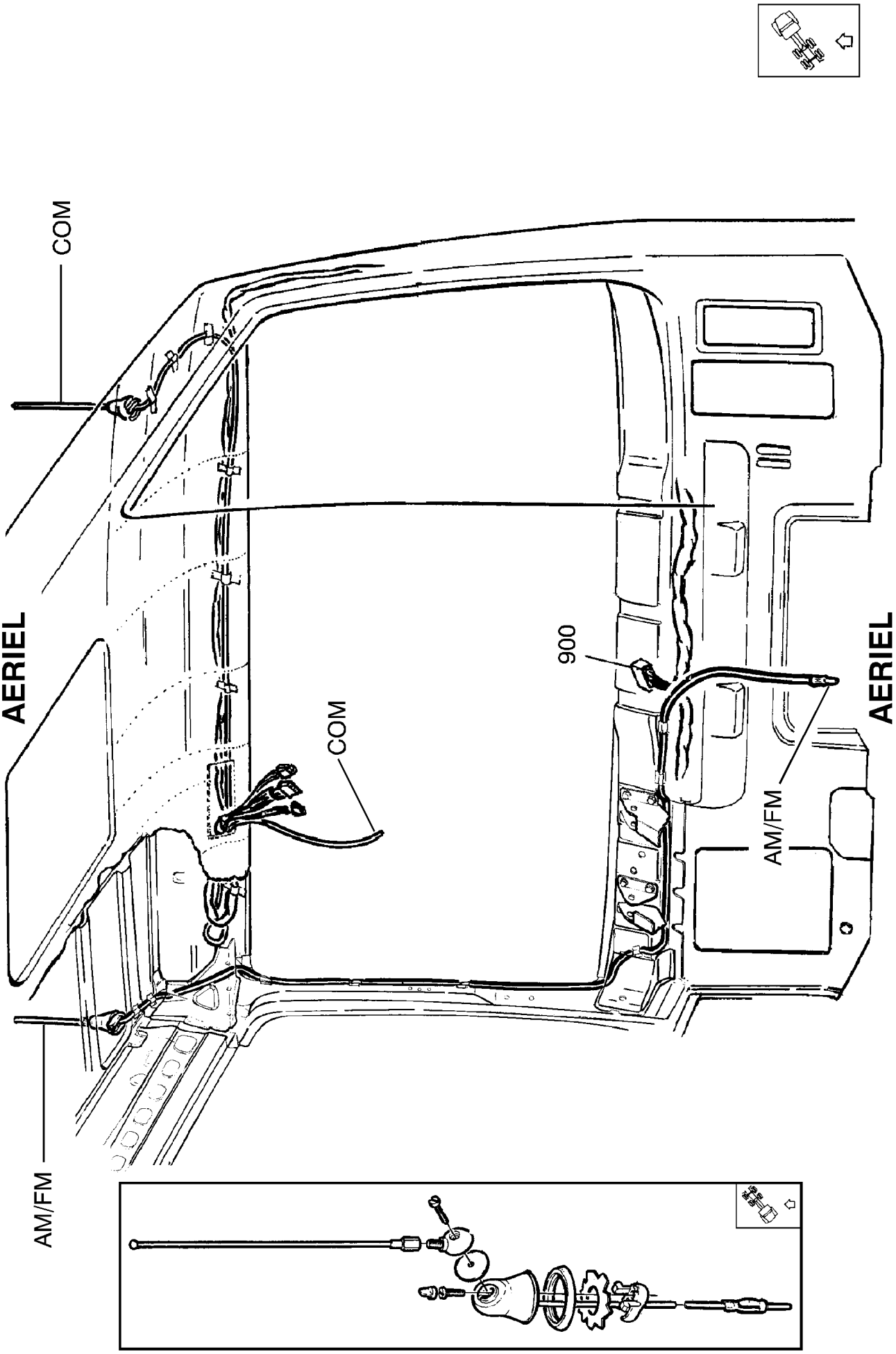
COM
AERIEL
COM
900
AERIEL
AM/FM
AM/FM

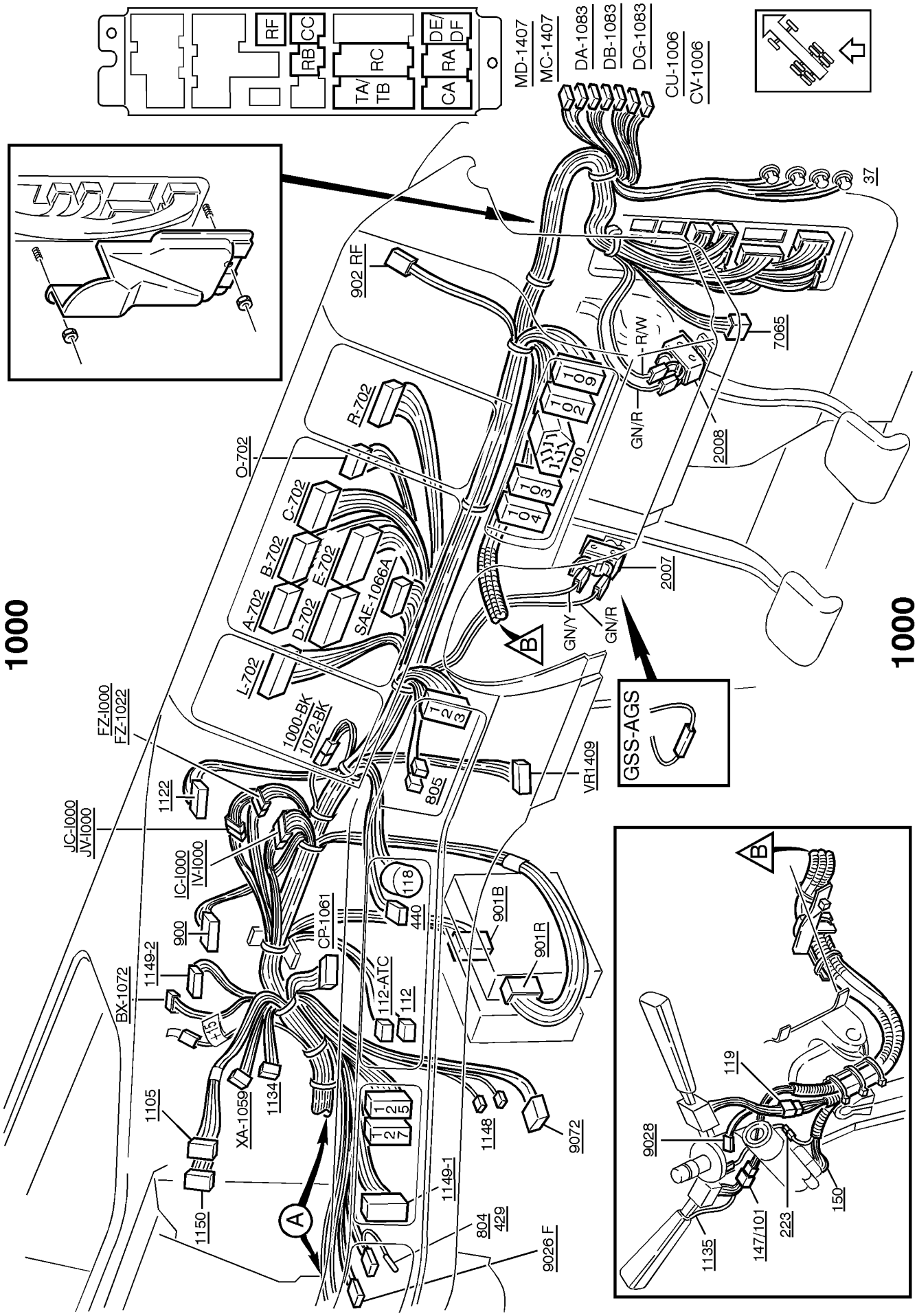
1000
1000
RF
RB
CC
TA/
TB
RC
CA
RA
DE/
DF
MD-1407
MC-1407
DA-1083
DB-1083
DG-1083
CU-1006
CV-1006
37
902 RF
7065
R/W
GN/R
2008
2007
GN/Y
GN/R
100
R-702
O-702
C-702
B-702
E-702
A-702
D-702
SAE-1066A
L-702
1000-BK
1072-BK
FZ-I000
FZ-1022
JC-I000
JV-I000
1122
IC-I000
IV-I000
900
BX-1072
1149-2
CP-1061
112-ATC
112
118
440
805
VR1409
GSS-AGS
901B
901R
1105
XA-1059
1134
1150
1148
9072
1149-1
804
429
9026 F
119
9028
1135
147/101
223
150
A
B
C
T3007954

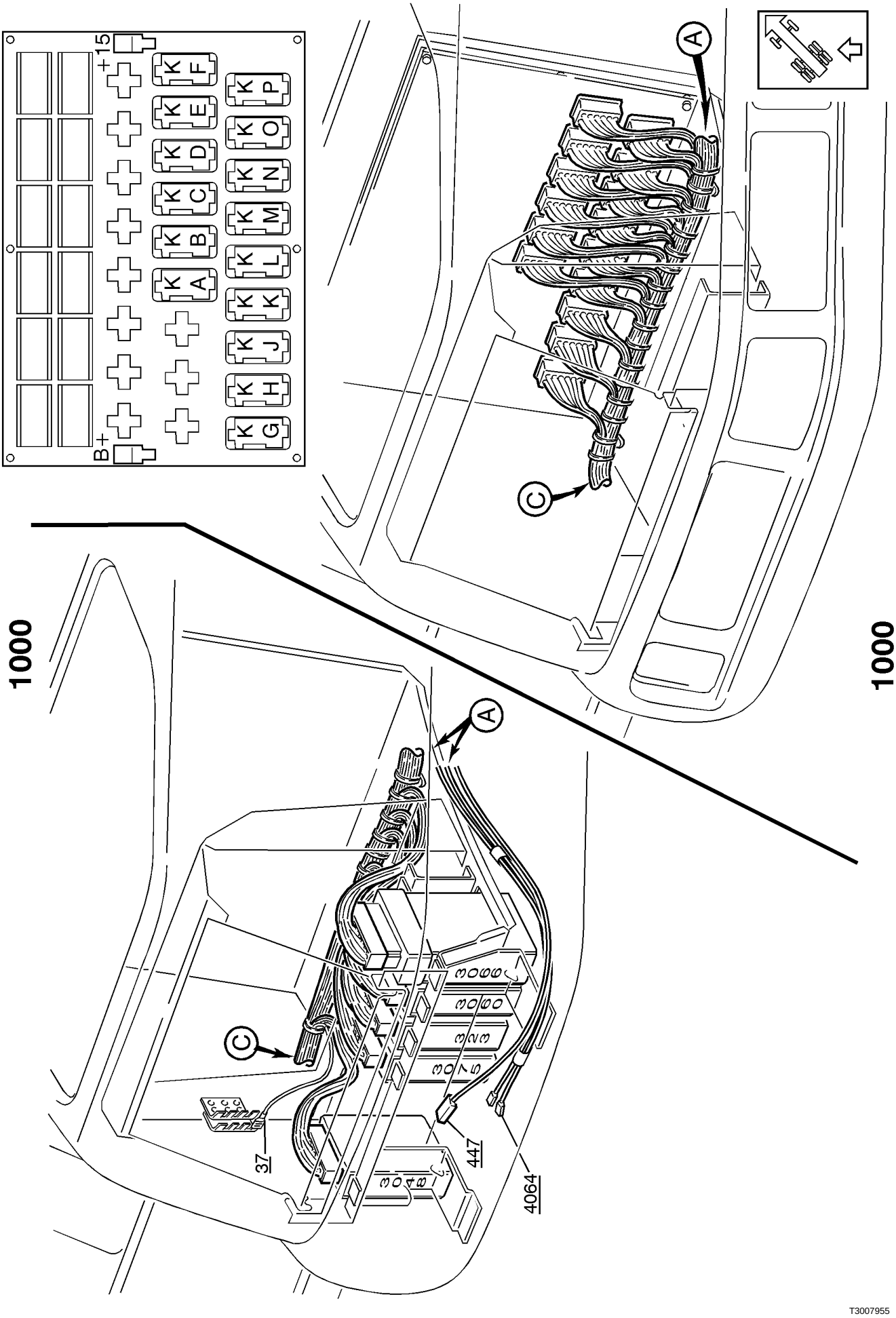
1000
1000
A
A
C
C
37
447
4064
B+
+15
K A
K B
K C
K D
K E
K F
K G
K H
K J
K K
K L
K M
K N
K O
K P
T3007955

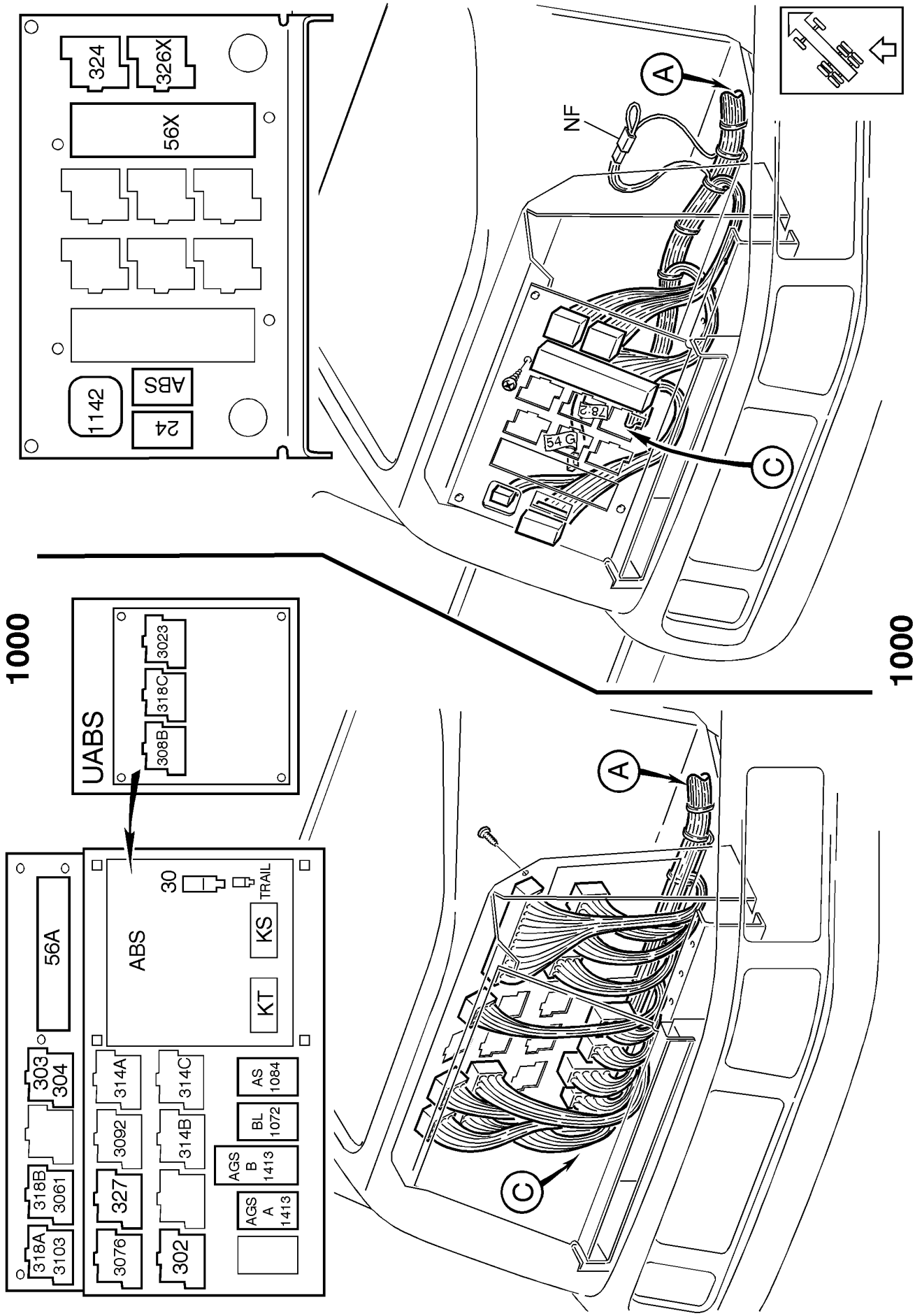
324
326X
56X
1142
ABS
24
NF
A
C
54 G
78:2
1000
UABS
308B
318C
3023
56A
ABS
30
TRAIL
KS
KT
303
304
318B
3061
318A
3103
327
3076
3092
302
314A
314B
314C
AGS B 1413
AGS A 1413
BL 1072
AS 1084
1000
A
C

T3007956

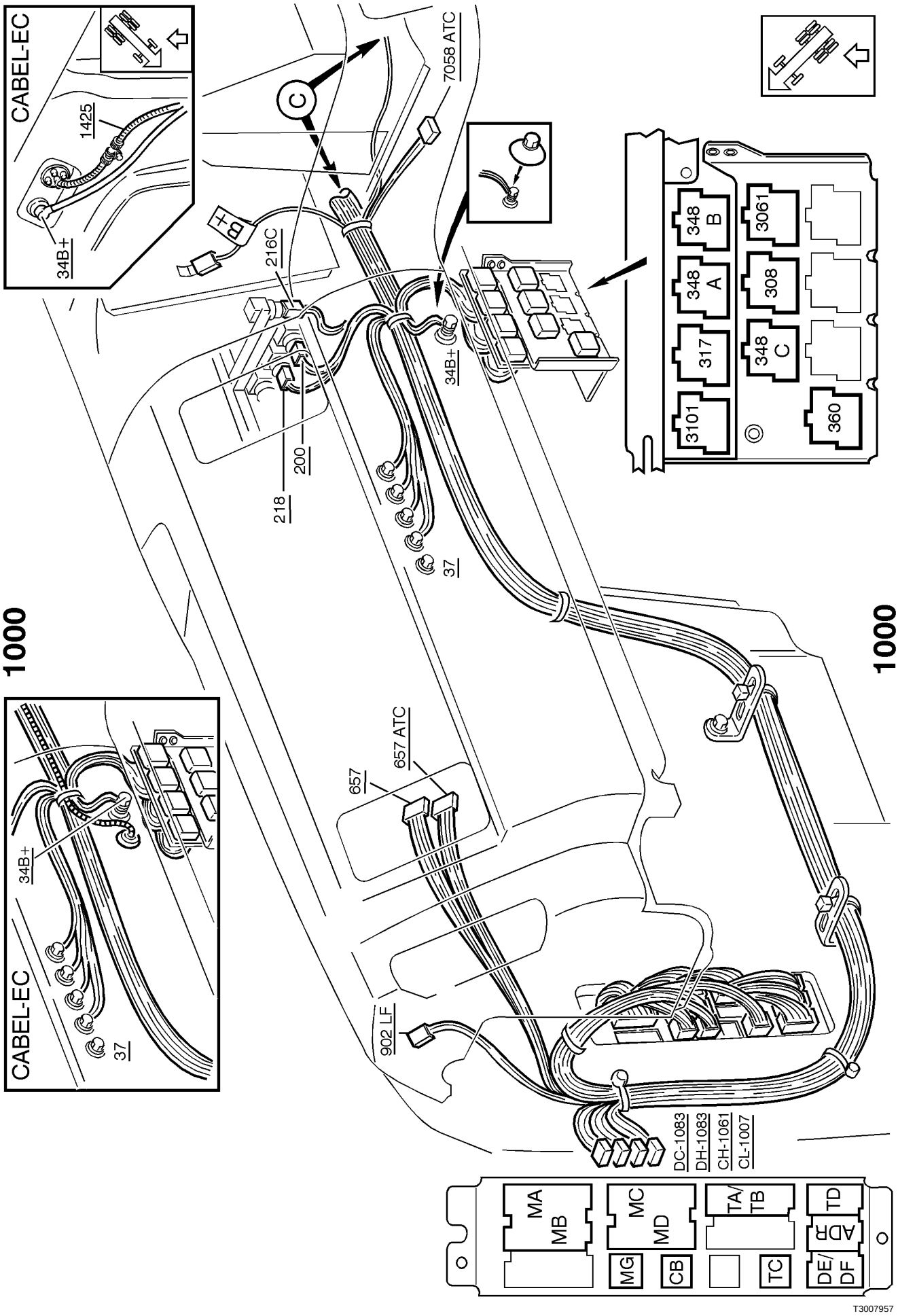
CABEL-EC
1425
34B+
C
7058 ATC
216C
200
218
34B+
37
348 B
348 A
317
3101
3061
308
348 C
360
1000
1000
CABEL-EC
34B+
37
657
657 ATC
902 LF
DC-1083
DH-1083
CH-1061
CL-1007
MA
MB
MC
MD
TA/
TB
TD
ADR
MG
CB
TC
DE/
DF

T3007957

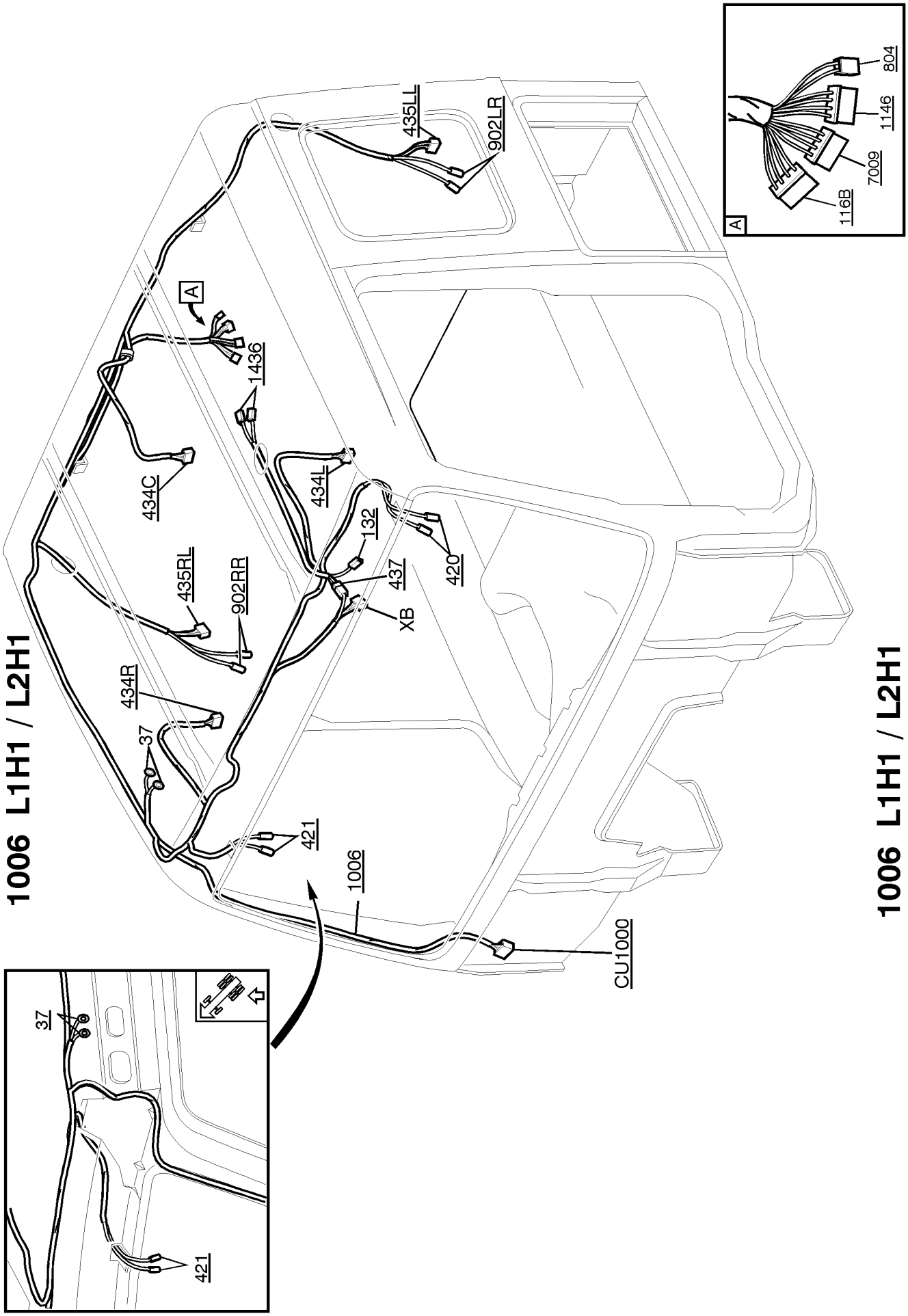
1006 L1H1 / L2H1
435LL
902LR
A
1436
434C
434L
132
437
420
XB
435RL
902RR
434R
37
421
1006
CU1000
804
1146
7009
116B
A
37
421
1006 L1H1 / L2H1

T3007958

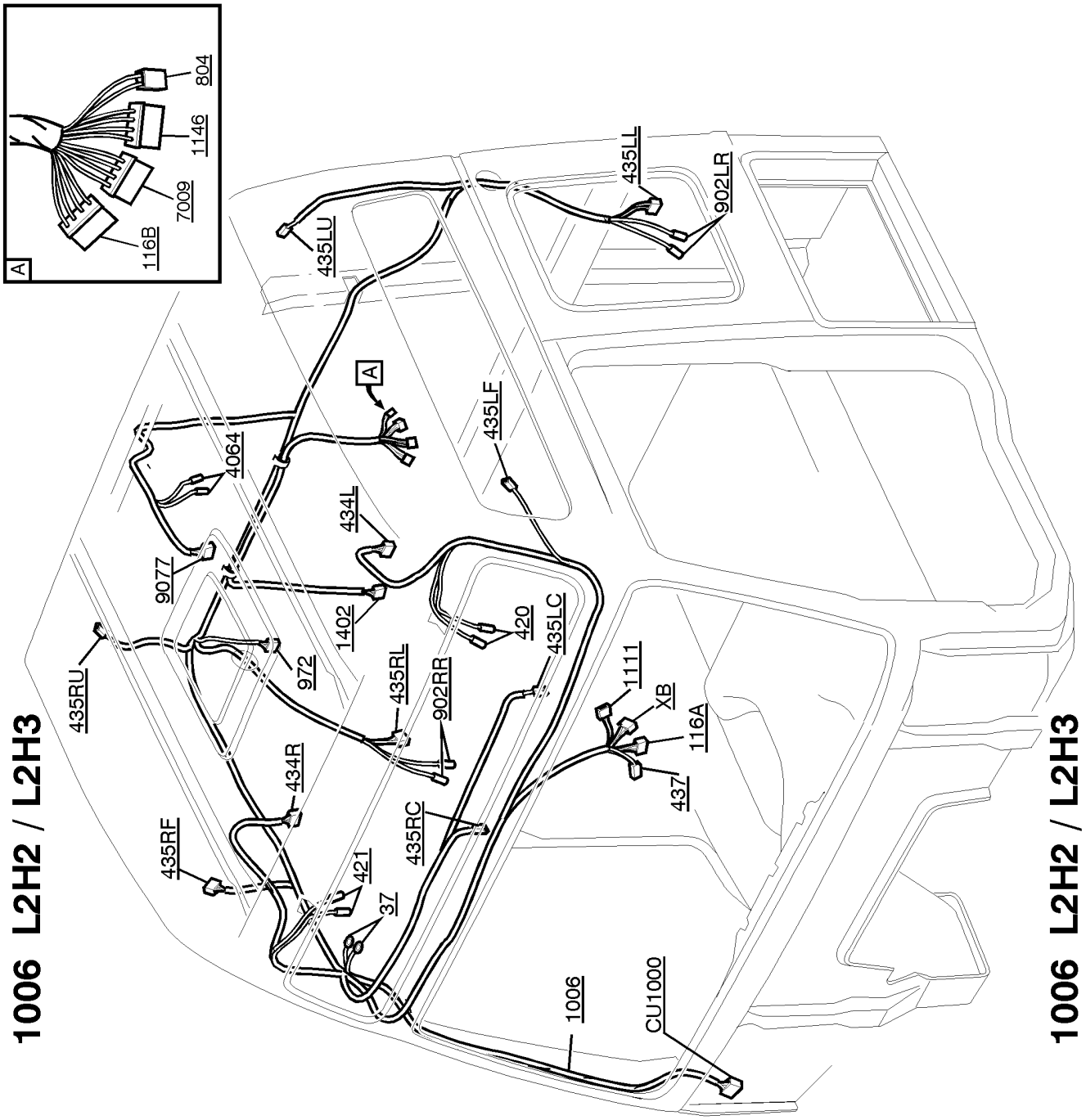
1006 L2H2 / L2H3
A
804
1146
7009
116B
435LU
435LL
902LR
4064
9077
435RU
972
434L
1402
435LF
420
435LC
435RL
902RR
1111
XB
116A
437
434R
435RF
421
37
435RC
1006
CU1000
1006 L2H2 / L2H3

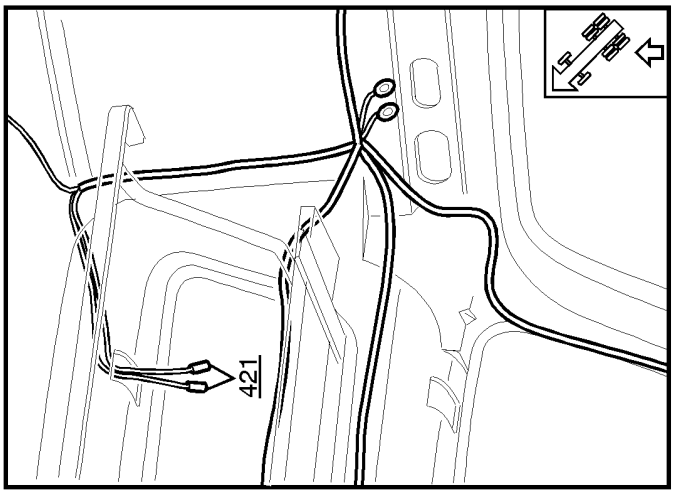
421

T3007959

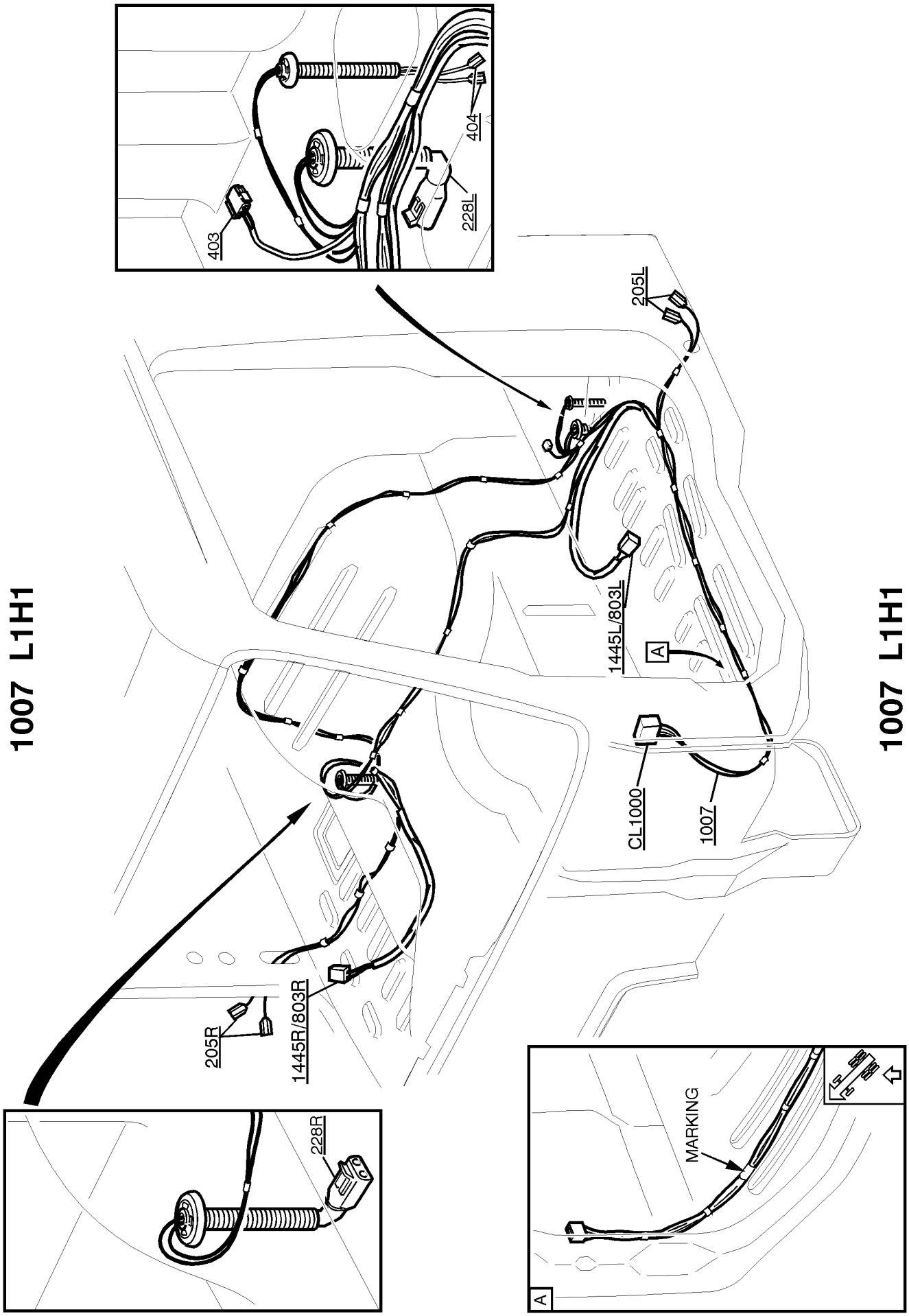
1007 L1H1
403
404
228L
205L
1445L/803L
A
CL1000
1007
205R
1445R/803R
228R
MARKING
A
1007 L1H1
T3007960

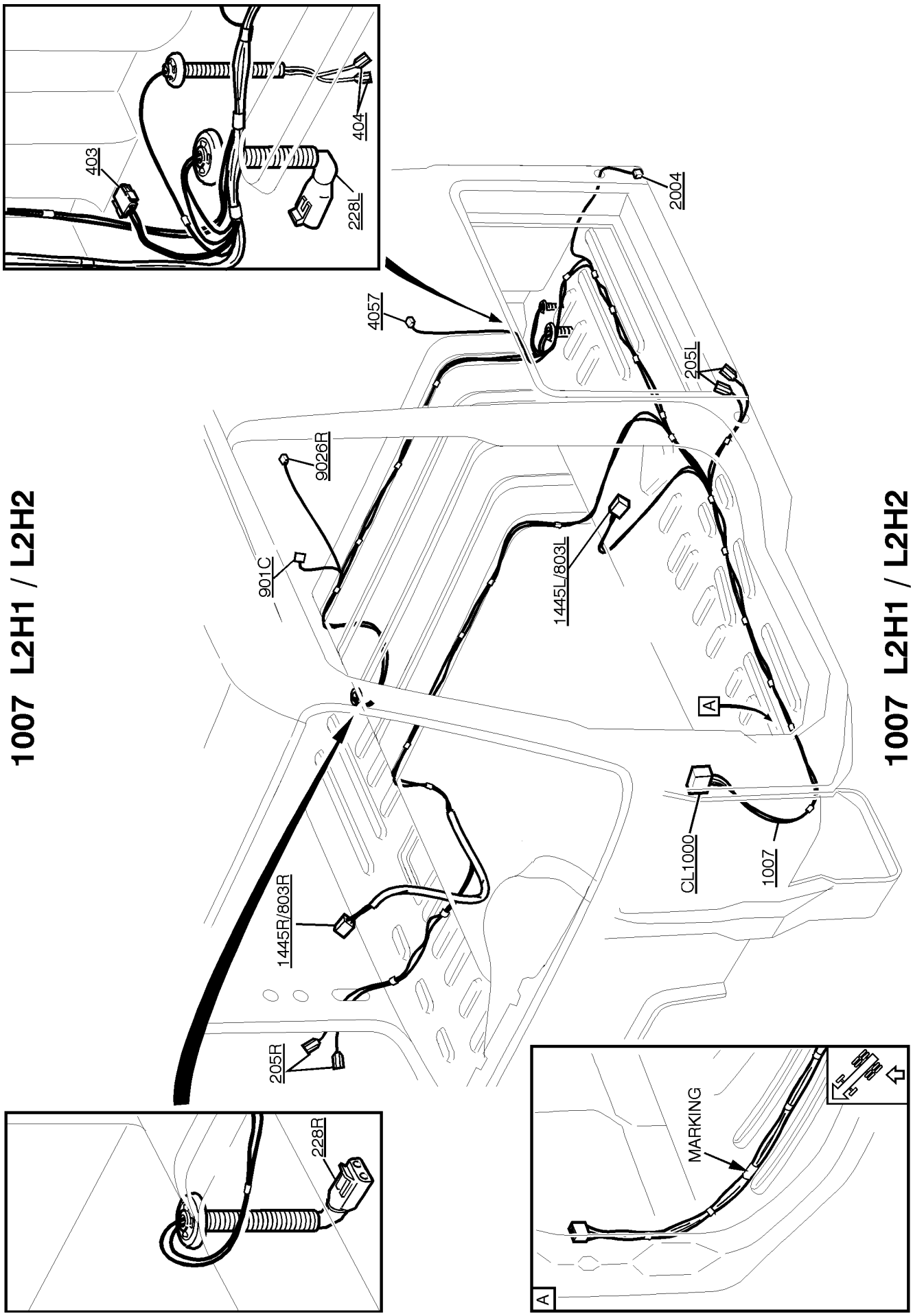
1007 L2H1 / L2H2
403
404
228L
4057
2004
205L
9026R
901C
1445L/803L
A
CL1000
1007
1445R/803R
205R
228R
MARKING
A
1007 L2H1 / L2H2
T3007961

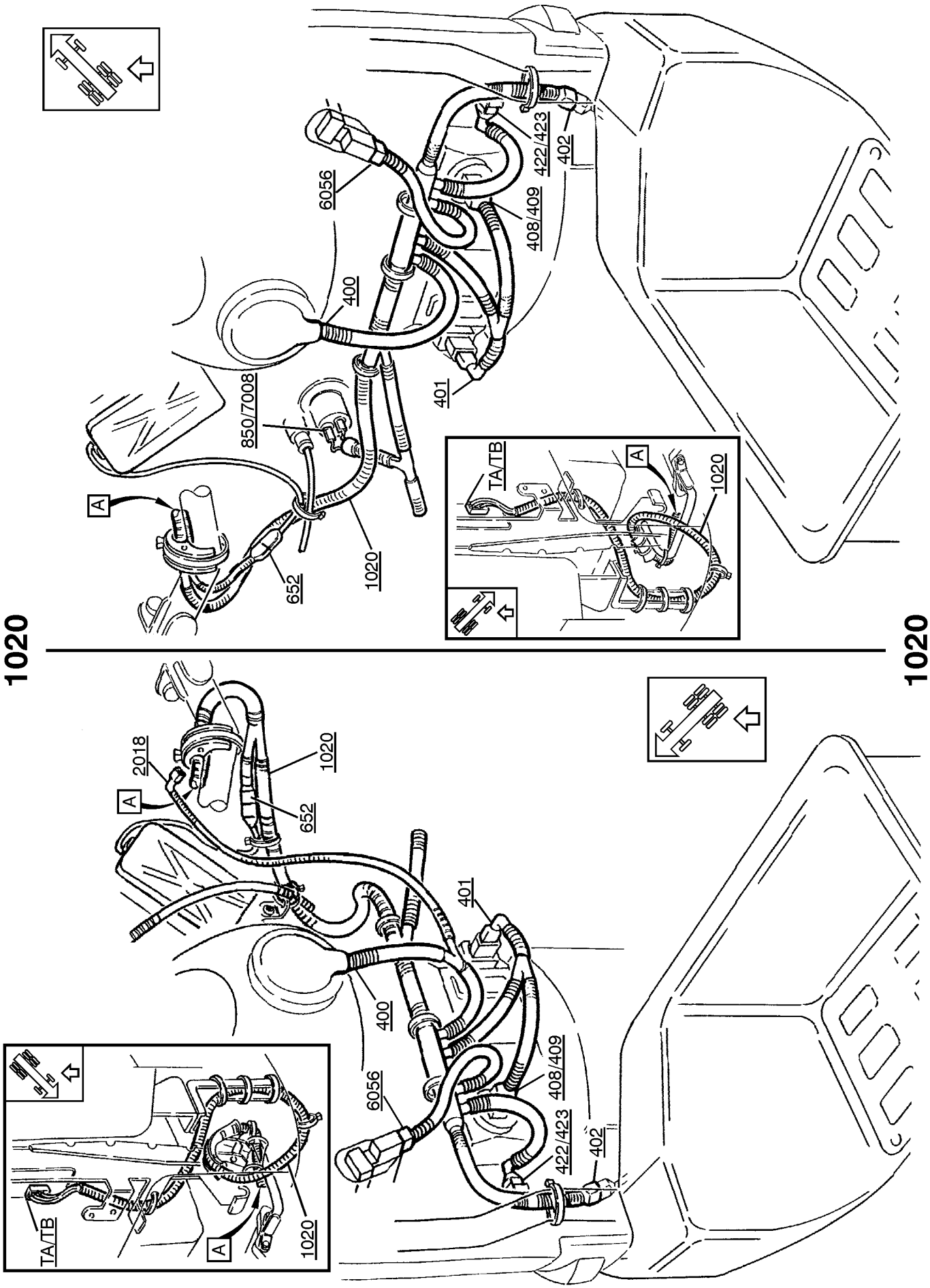
1020
6056
400
850/7008
A
652
1020
401
408/409
422/423
402
TA/TB
A
1020
1020
2018
A
652
1020
401
400
6056
408/409
422/423
402
TA/TB
A
1020

T3007962

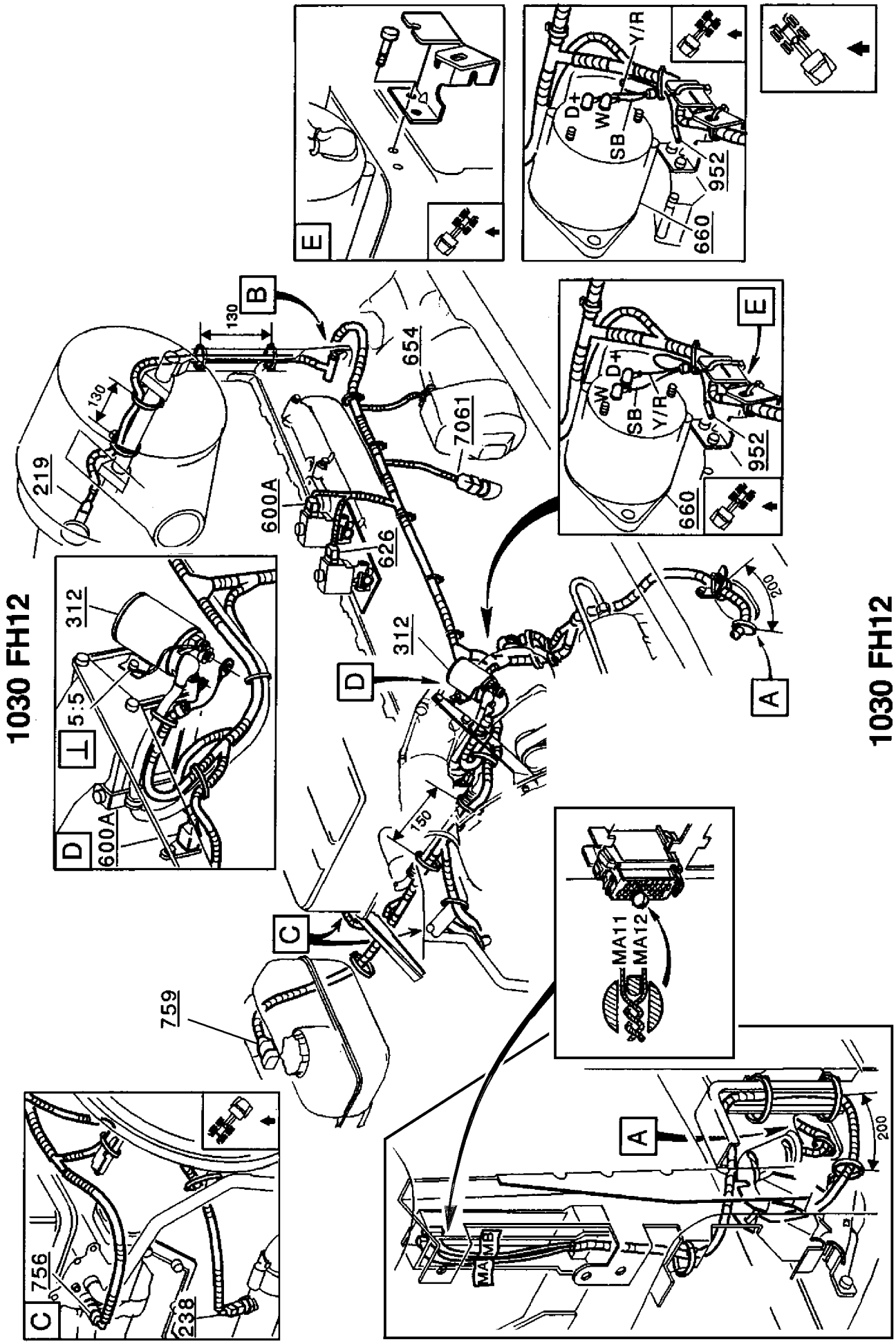
1030 FH12
1030 FH12
E
B
D
C
A
130
130
219
654
7061
600A
626
312
312
5:5
600A
150
759
756
238
660
952
D+
W
SB
Y/R
MA11
MA12
MA
MB
200
200

T3007367

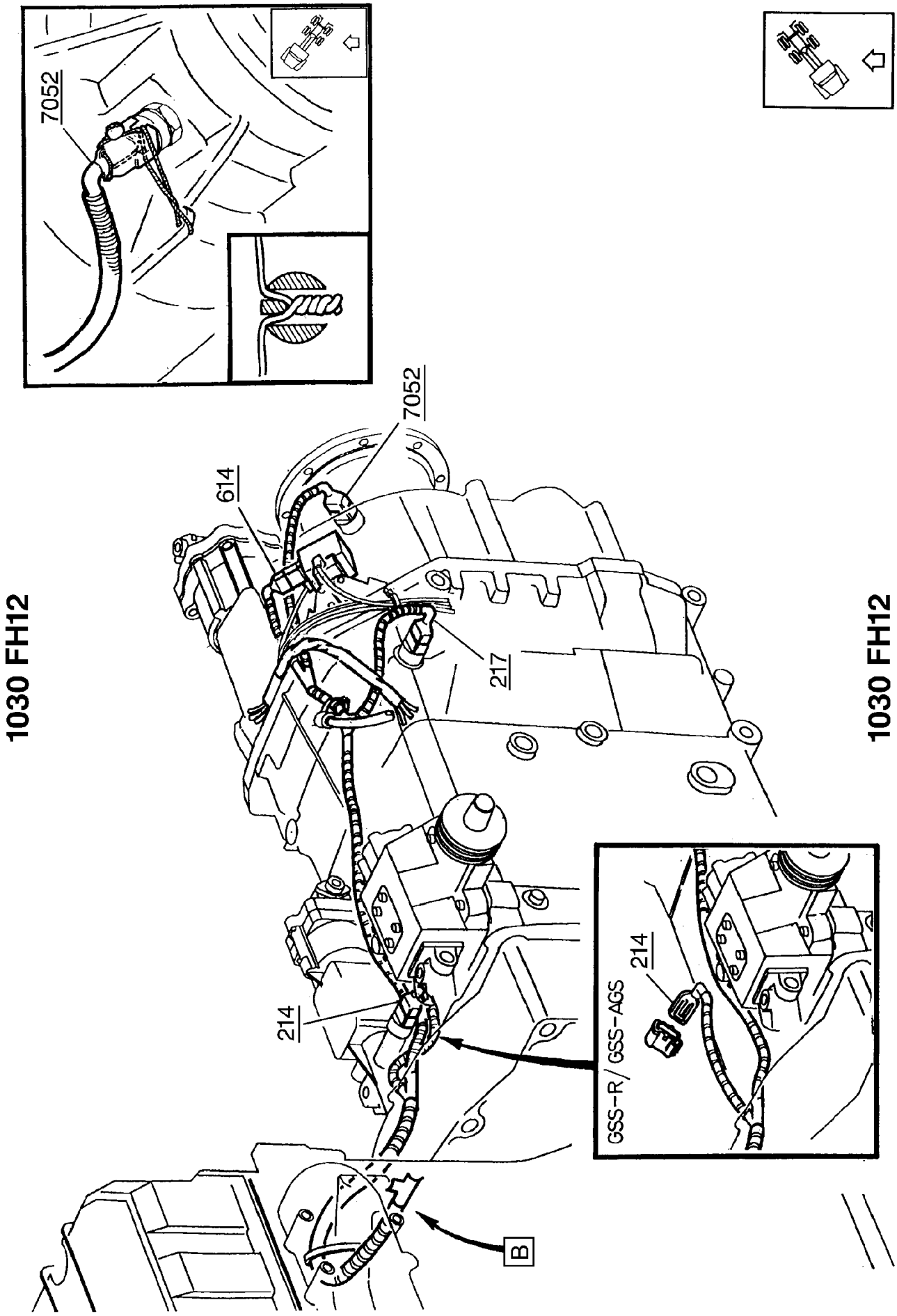
1030 FH12
7052
614
7052
217
214
GSS-R / GSS-AGS
214
B
1030 FH12
T3007368

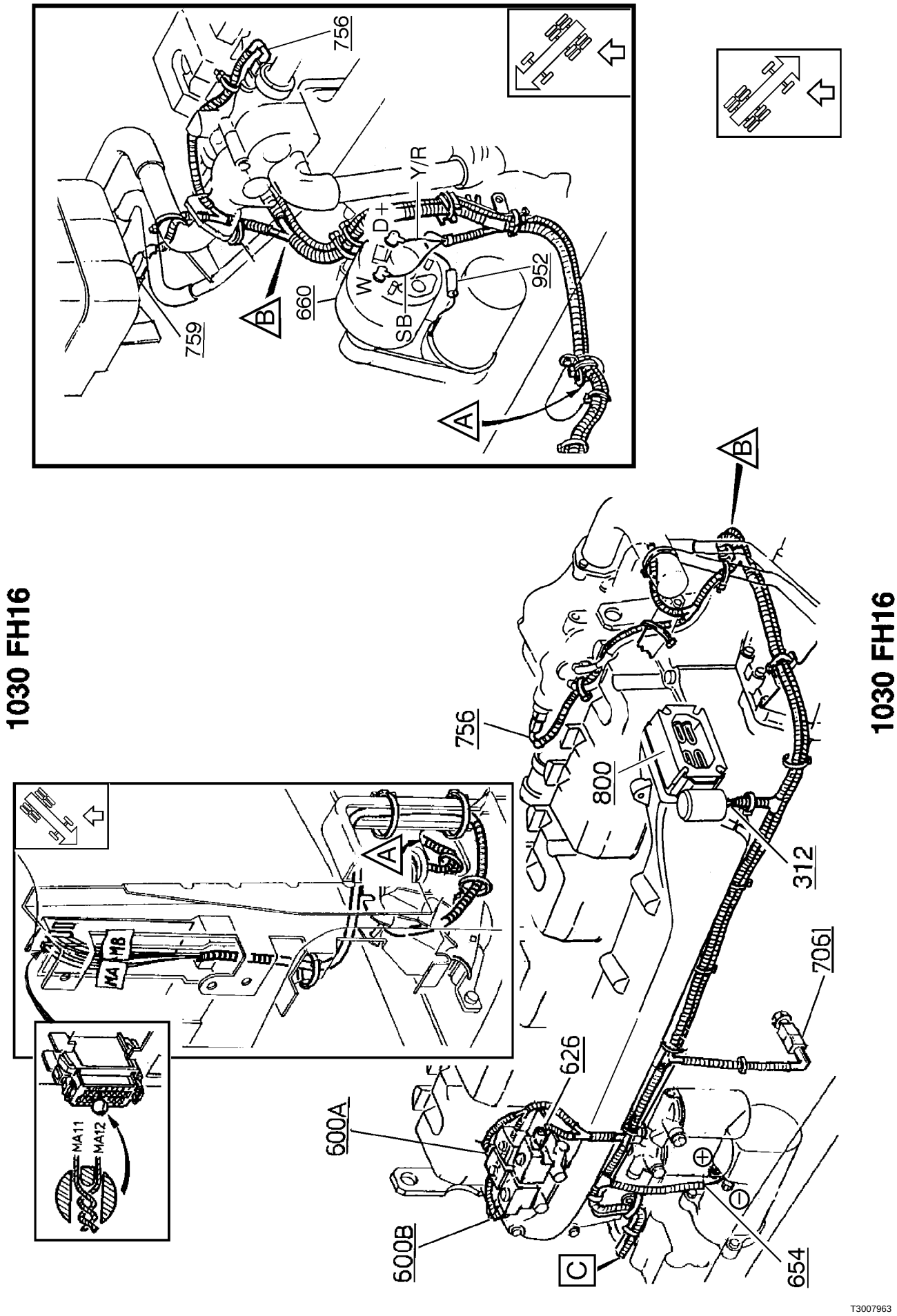
1030 FH16
756
759
660
952
B
A
W
D+
Y/R
SB
MA11
MA12
MA
MB
600A
600B
626
C
800
312
7061
654
T3007963

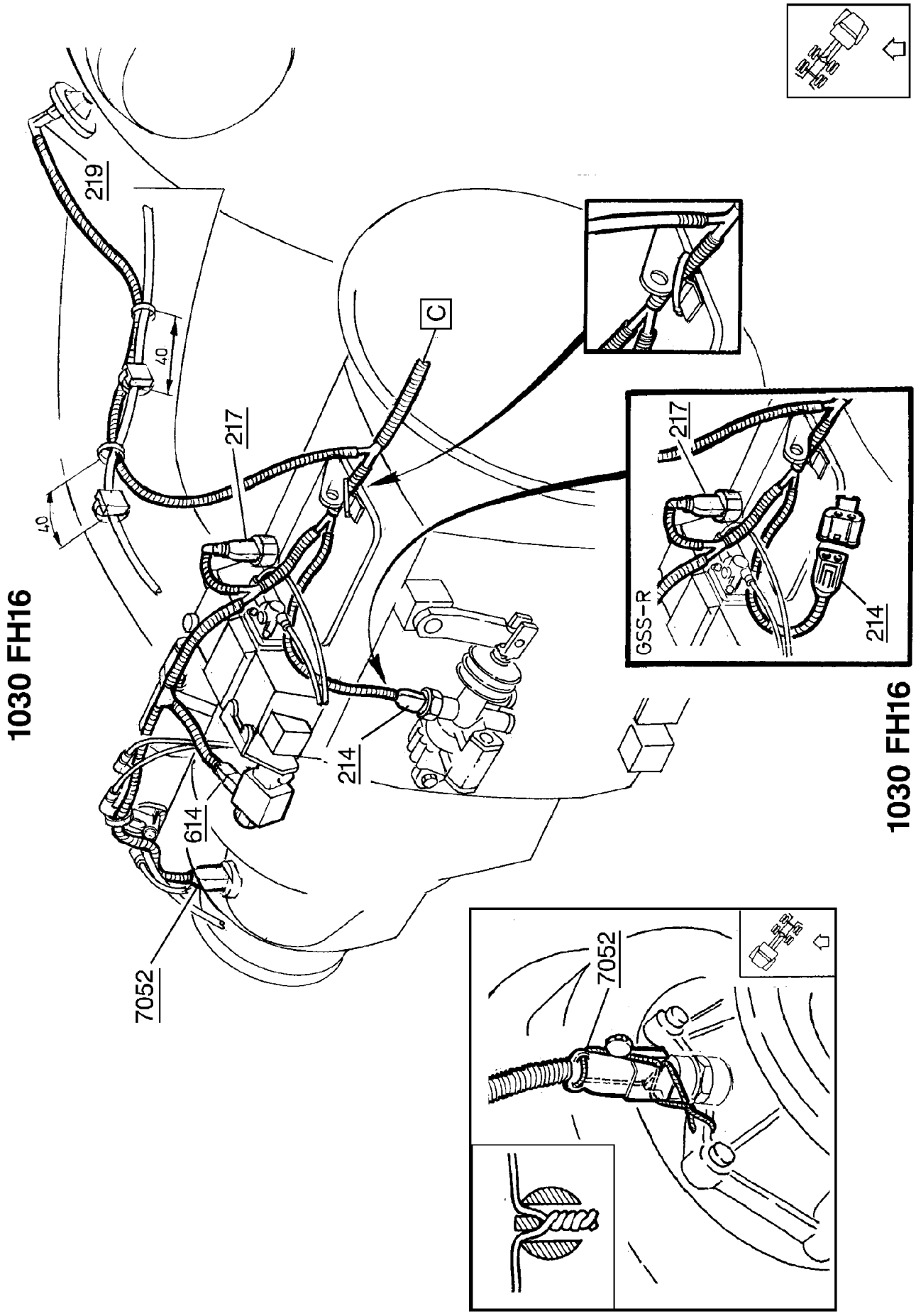
1030 FH16
219
40
40
217
C
214
614
7052
GSS-R
217
214
1030 FH16
7052
T3007373

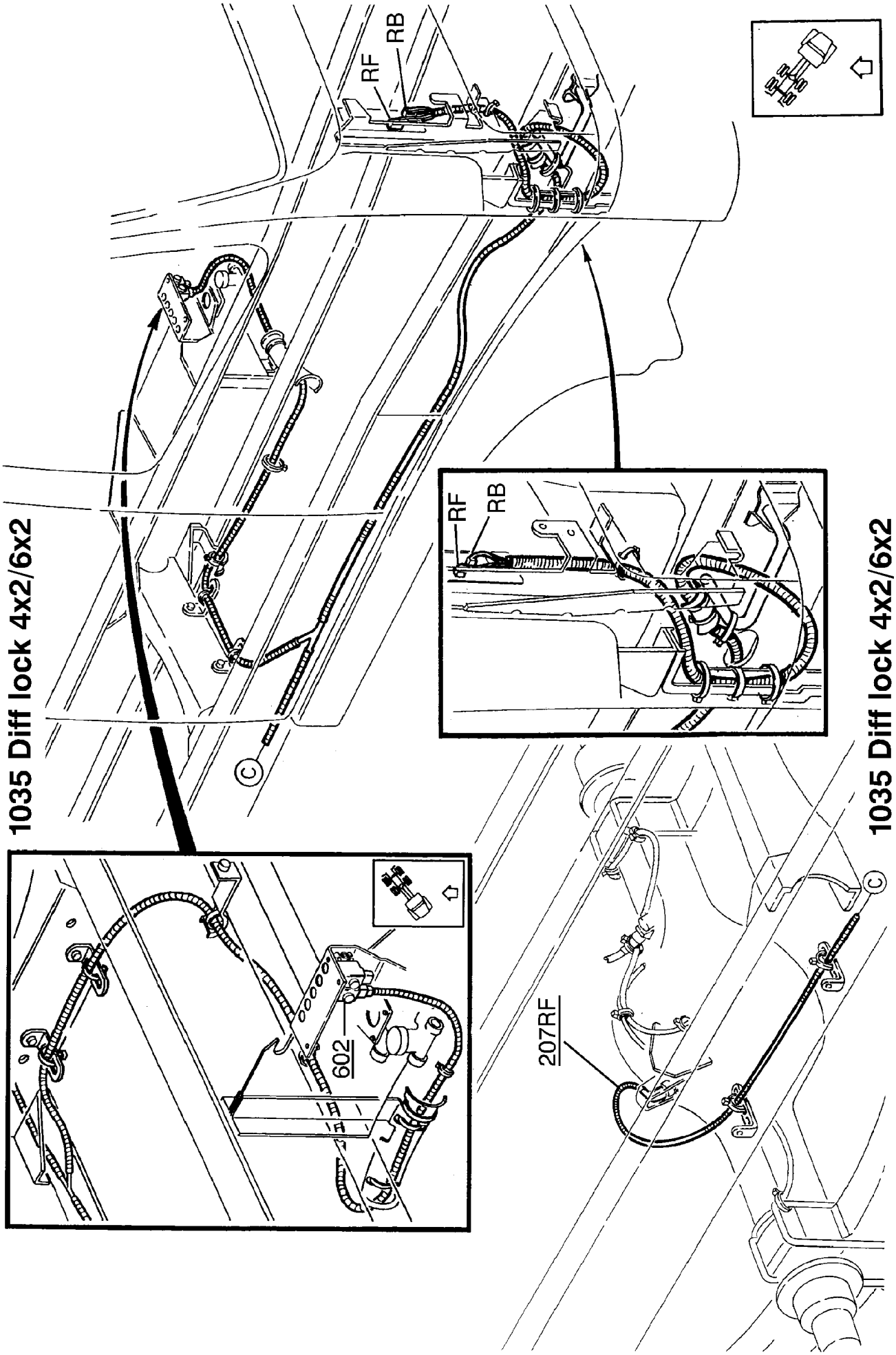
1035 Diff lock 4x2/6x2
RF
RB
RF
RB
602
207RF
1035 Diff lock 4x2/6x2
T3007374

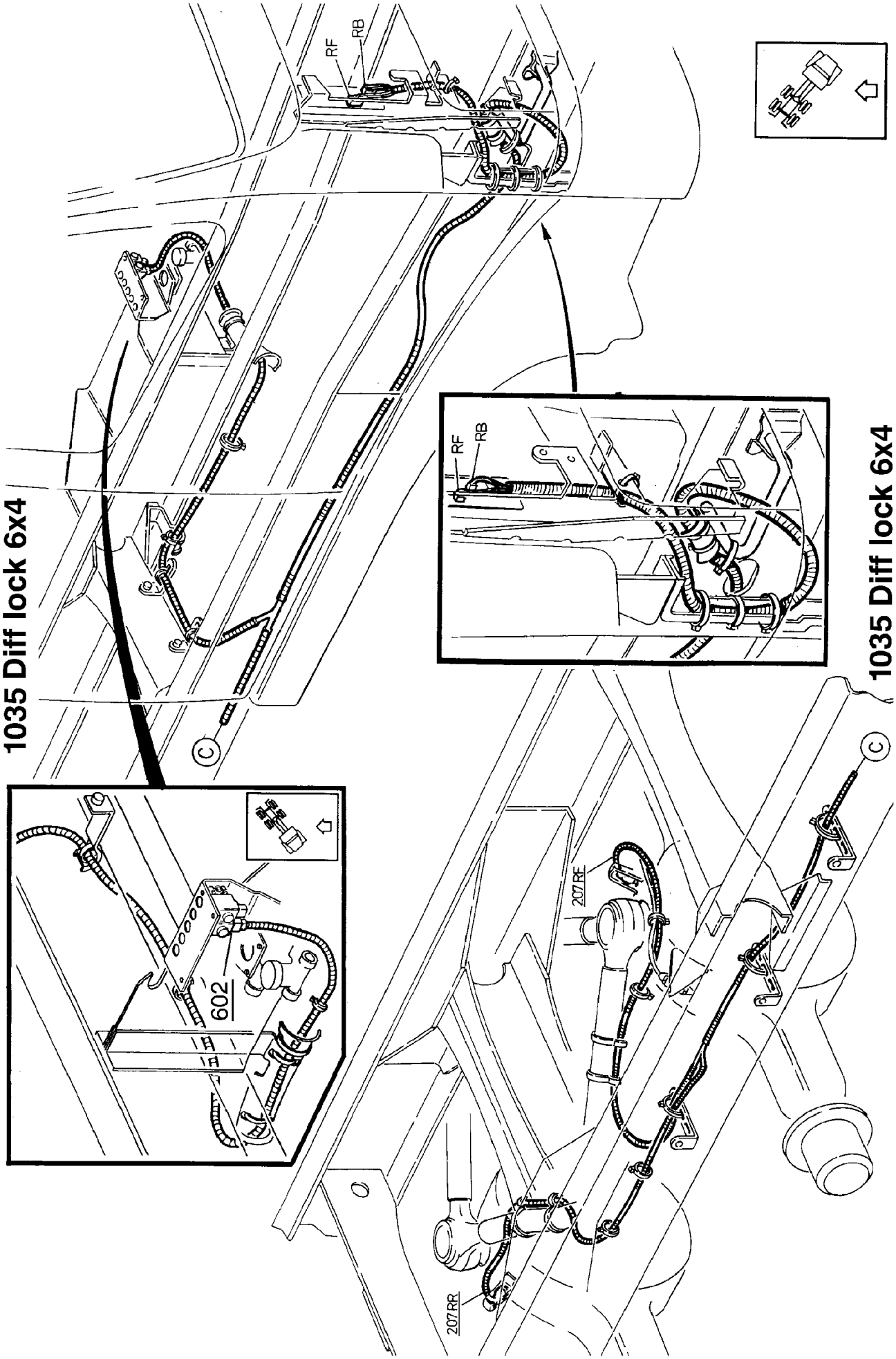

T3007375

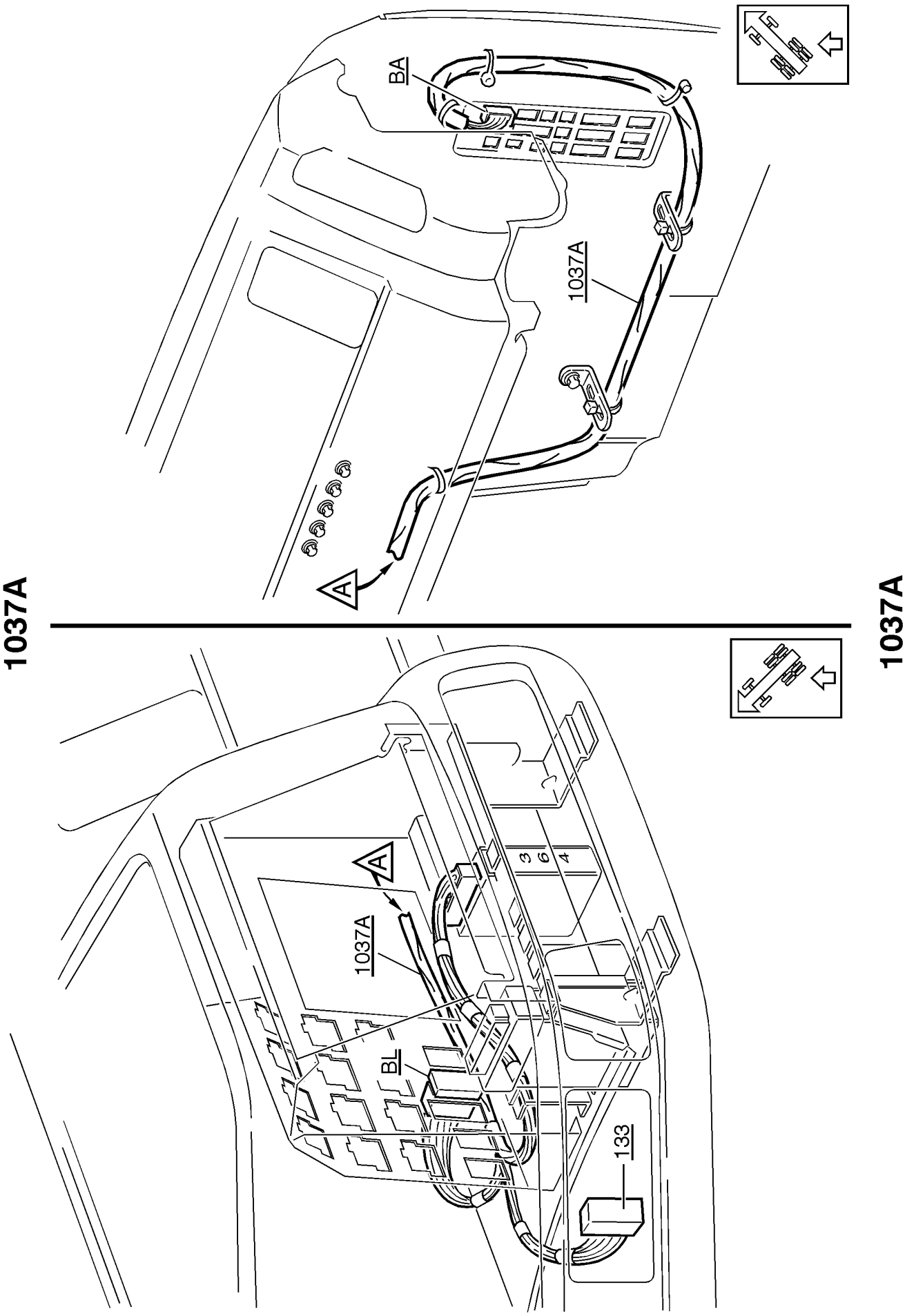
1037A
BA
1037A
A
1037A
A
1037A
BL
133
3
6
4
1037A
T3007964

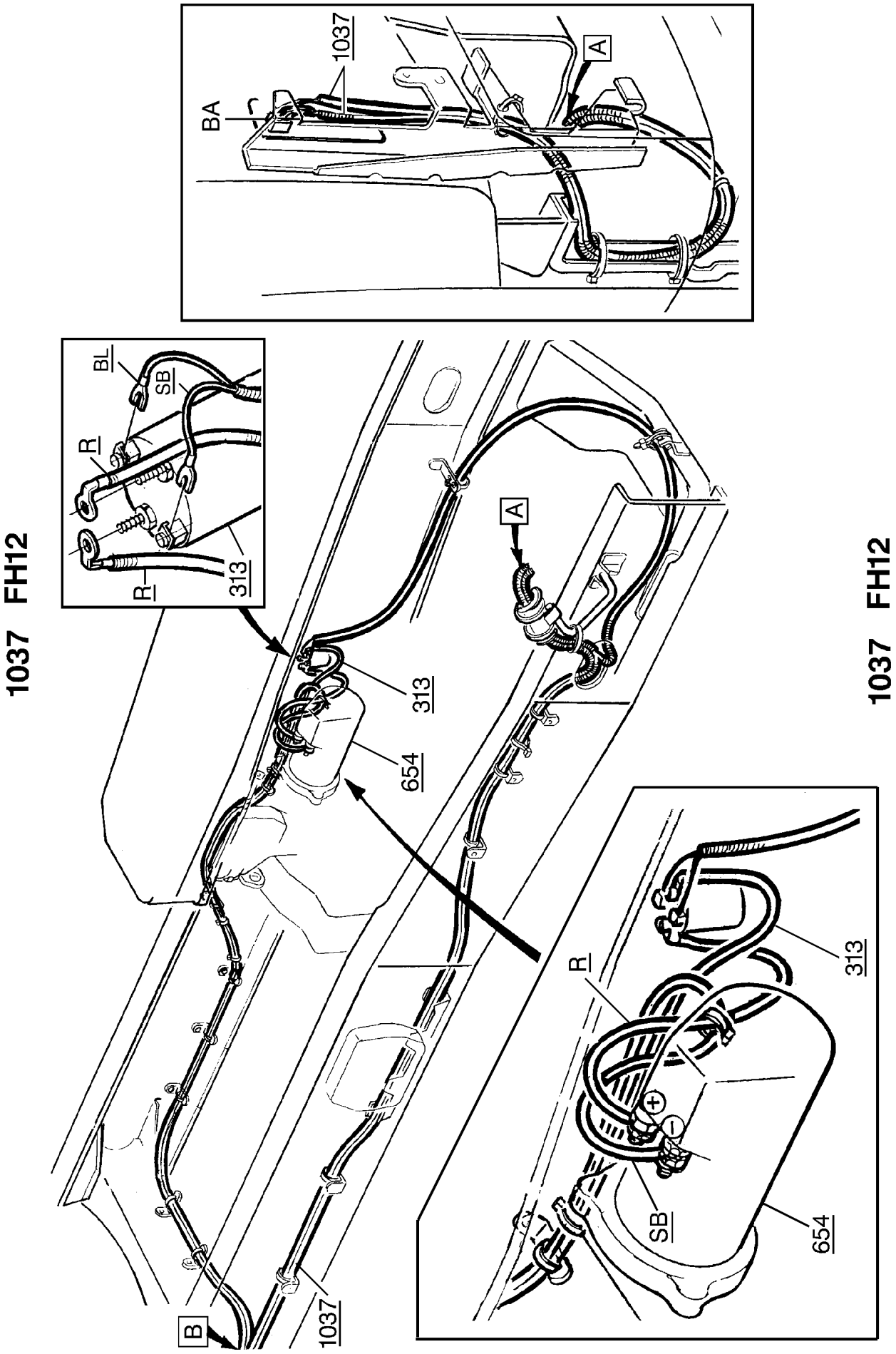
1037 FH12
BA
1037
A
BL
SB
R
R
313
313
654
A
B
1037
R
313
SB
654
1037 FH12
T3007965

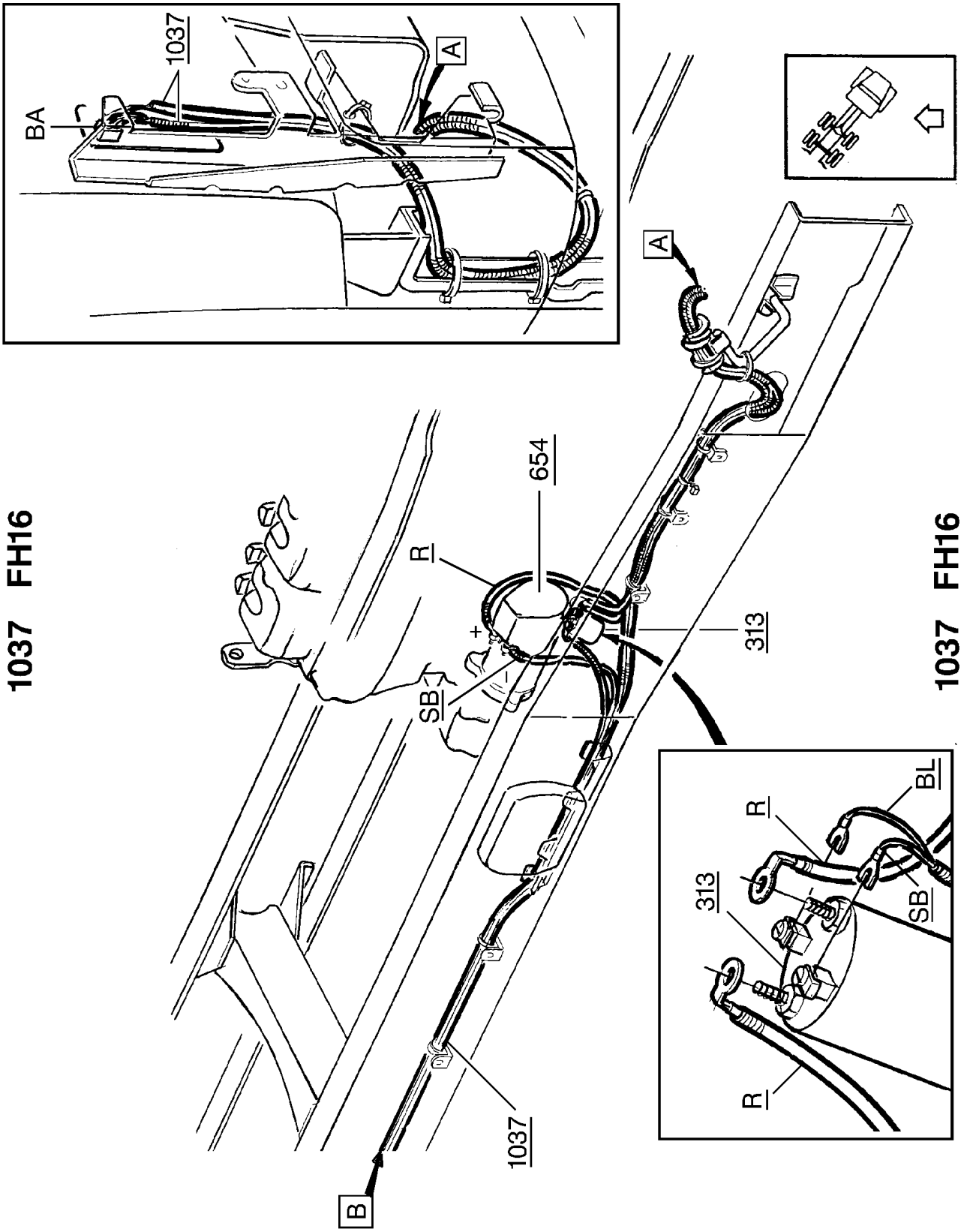
1037 FH16
1037
BA
A
654
R
SB
+
-
313
B
R
BL
SB
T3007966

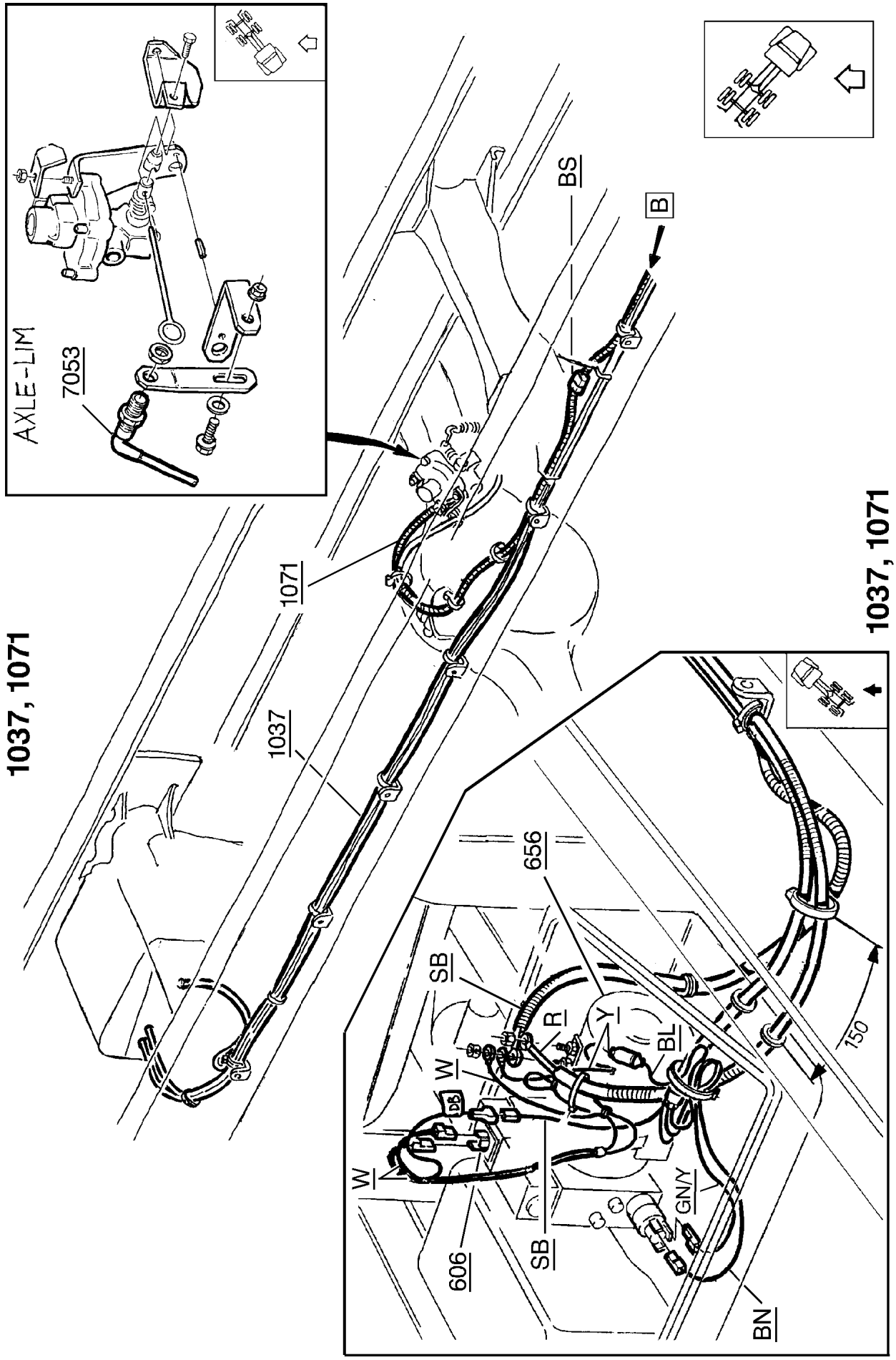
1037, 1071
AXLE-LIM
7053
1071
1037
BS
B
656
SB
R
Y
BL
W
W
606
SB
GN/Y
BN
150
1037, 1071

T3007967

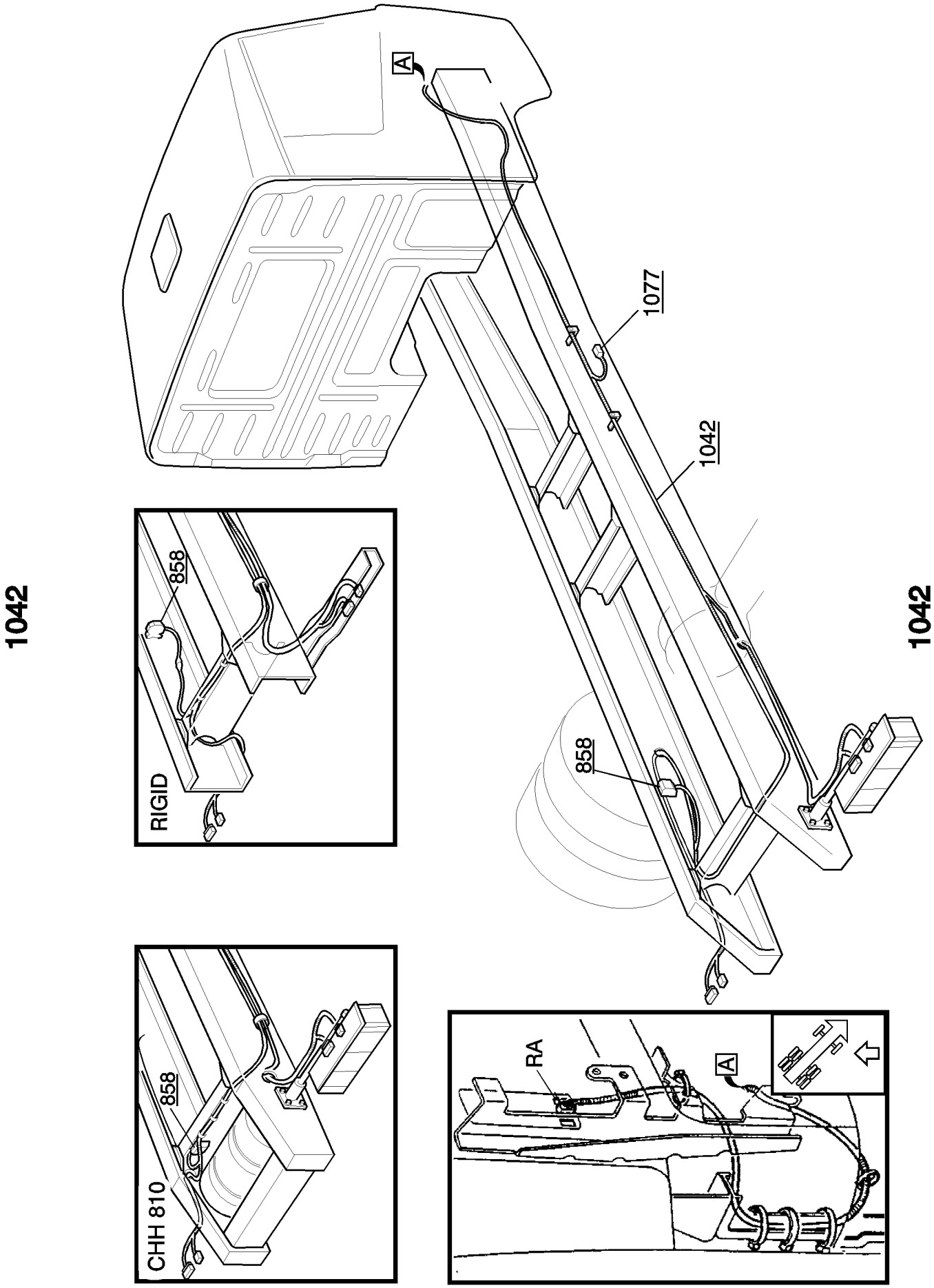
1042
RIGID
858
CHH 810
858
A
1077
1042
858
RA
A
1042
T3007968

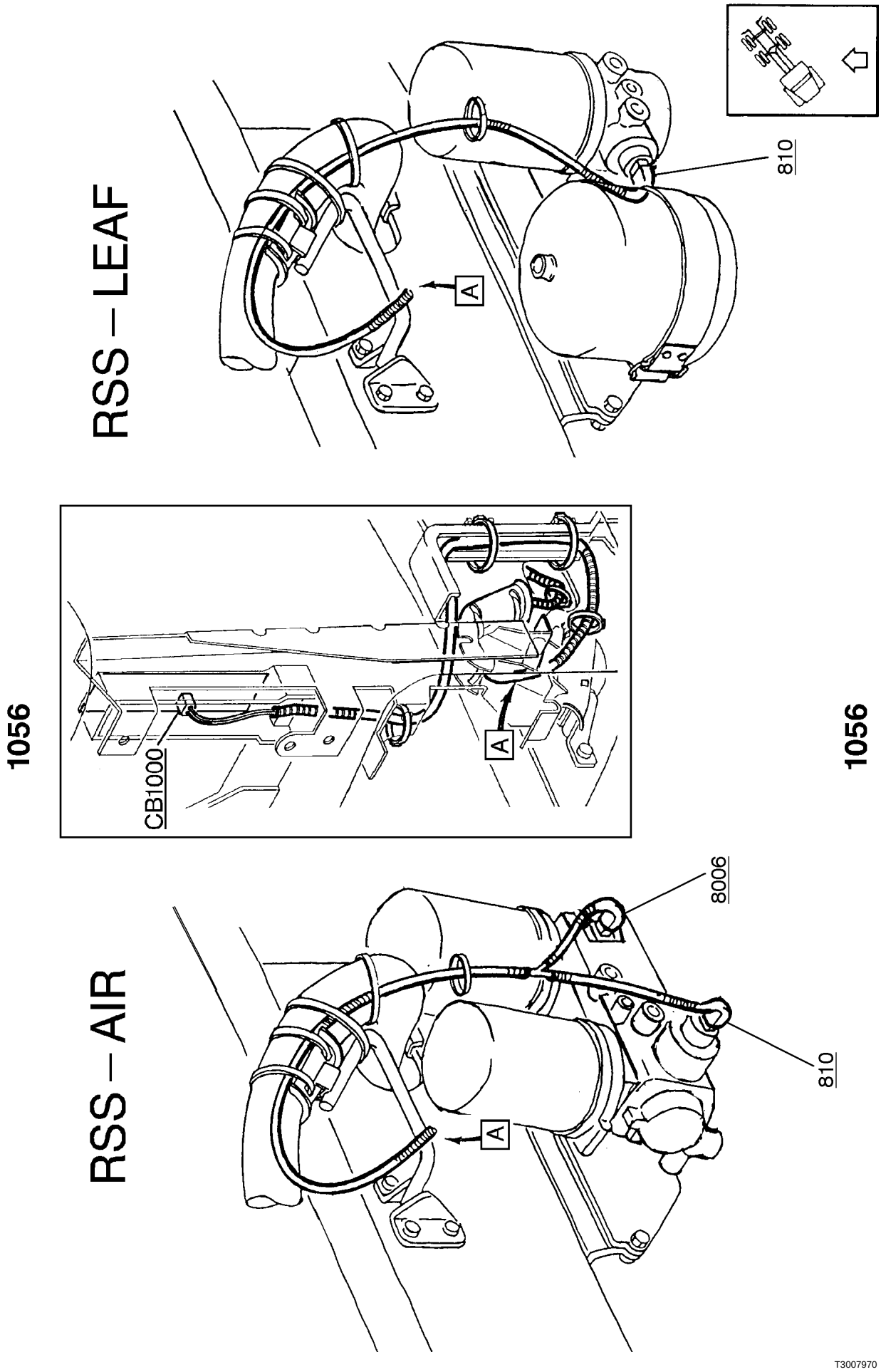
RSS – LEAF
810
A
1056
CB1000
A
1056
RSS – AIR
8006
810
A
T3007970

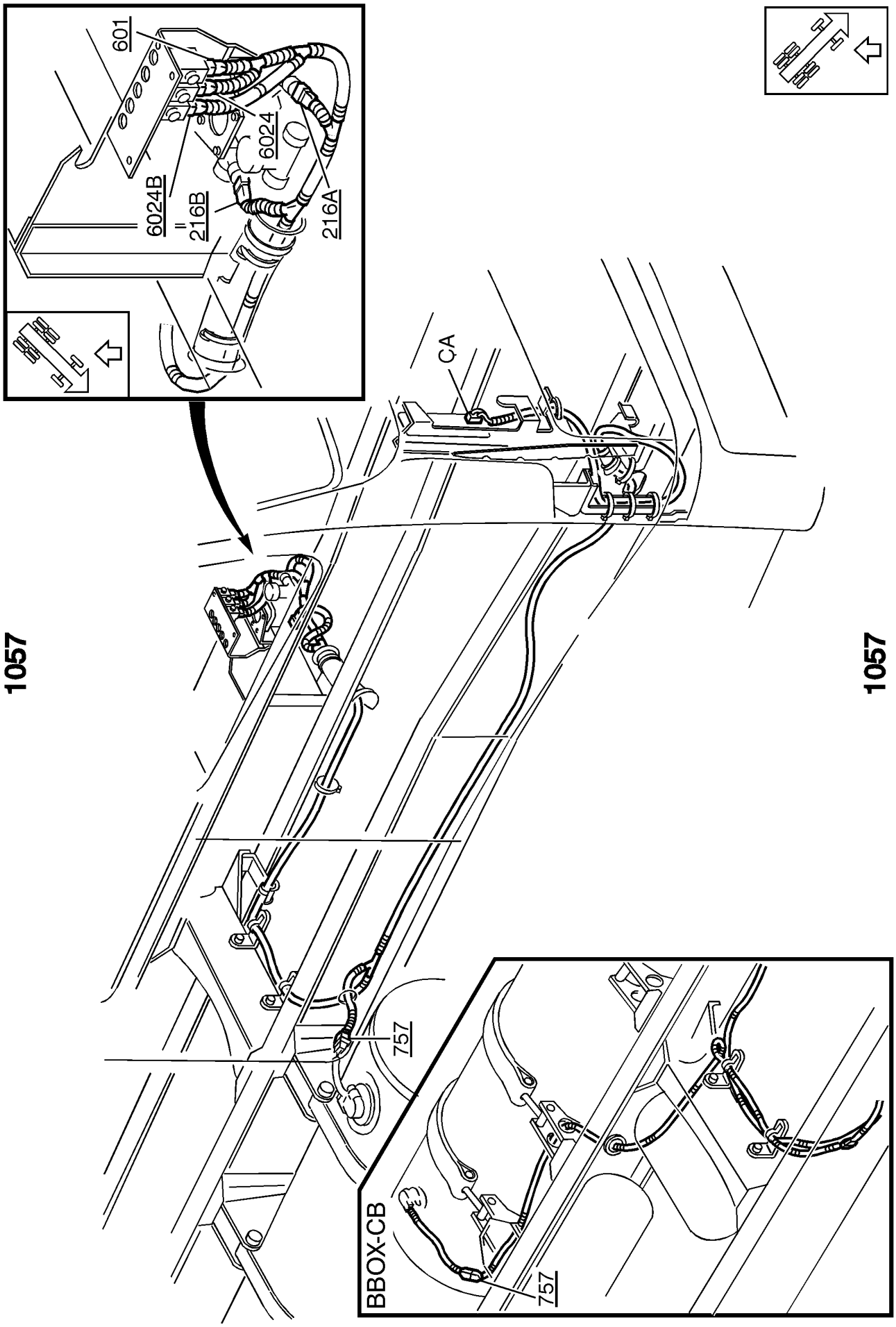

T3007971

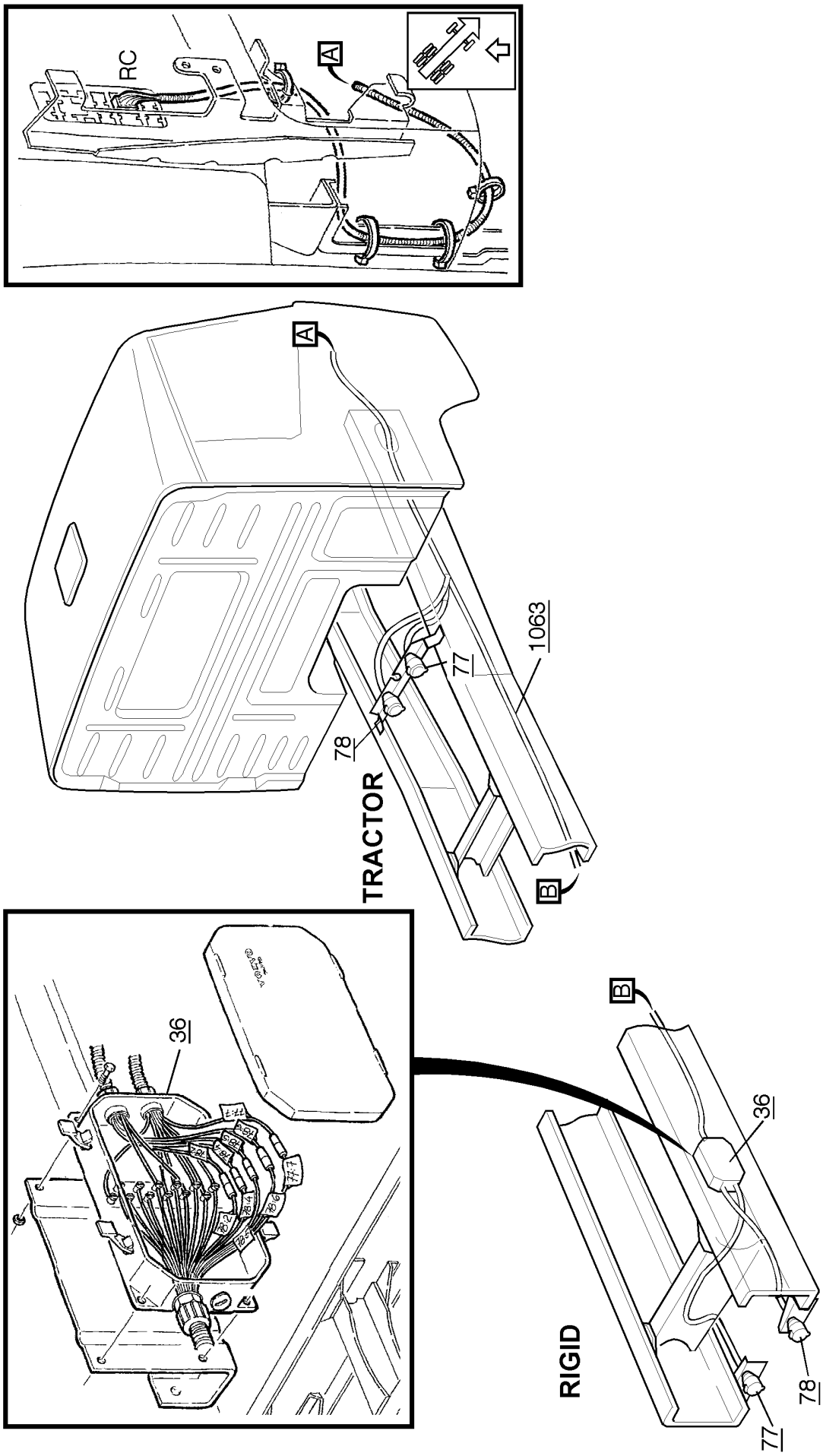
1063
RC
A
A
1063
77
78
TRACTOR
B
36
B
36
RIGID
78
77
1063
T3007972

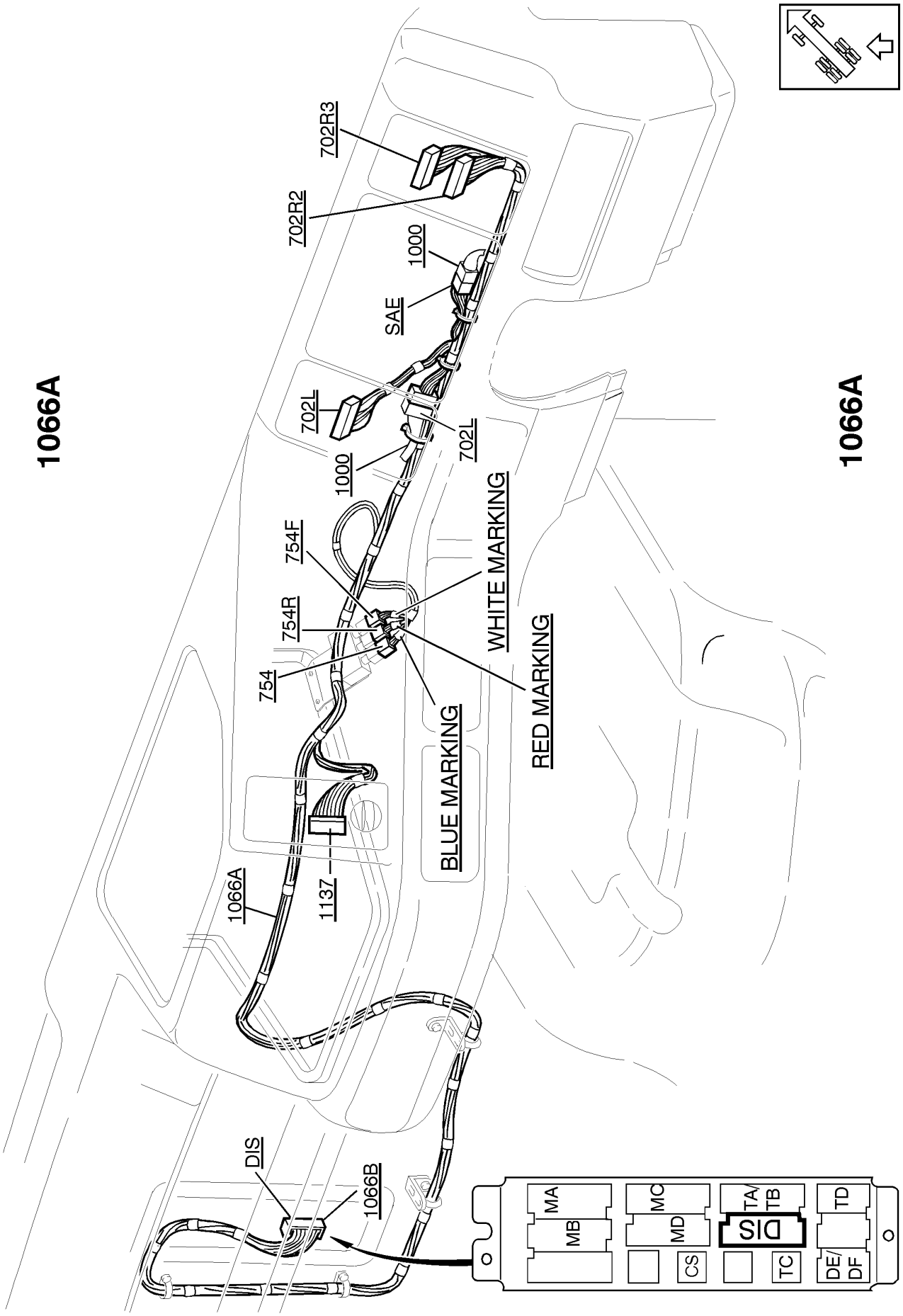
1066A
1066A
702R3
702R2
1000
SAE
702L
1000
702L
754F
754R
754
WHITE MARKING
RED MARKING
BLUE MARKING
1137
1066A
DIS
1066B
MA
MB
MC
MD
CS
TA/
TB
DIS
TC
TD
DE/
DF

T3007974

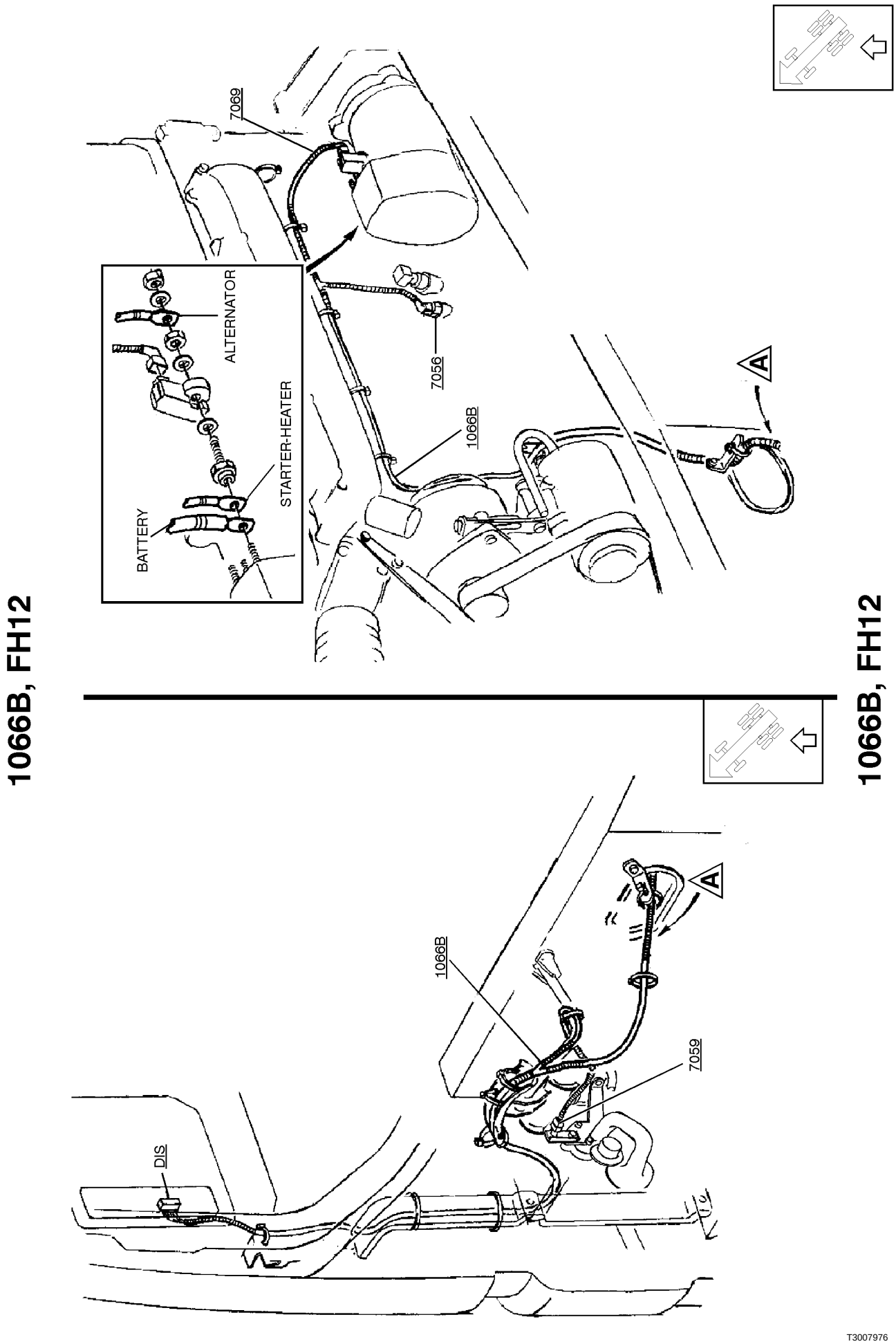
1066B, FH12
7069
ALTERNATOR
STARTER-HEATER
BATTERY
7056
1066B
A
1066B
7059
DIS
A
1066B, FH12
T3007976

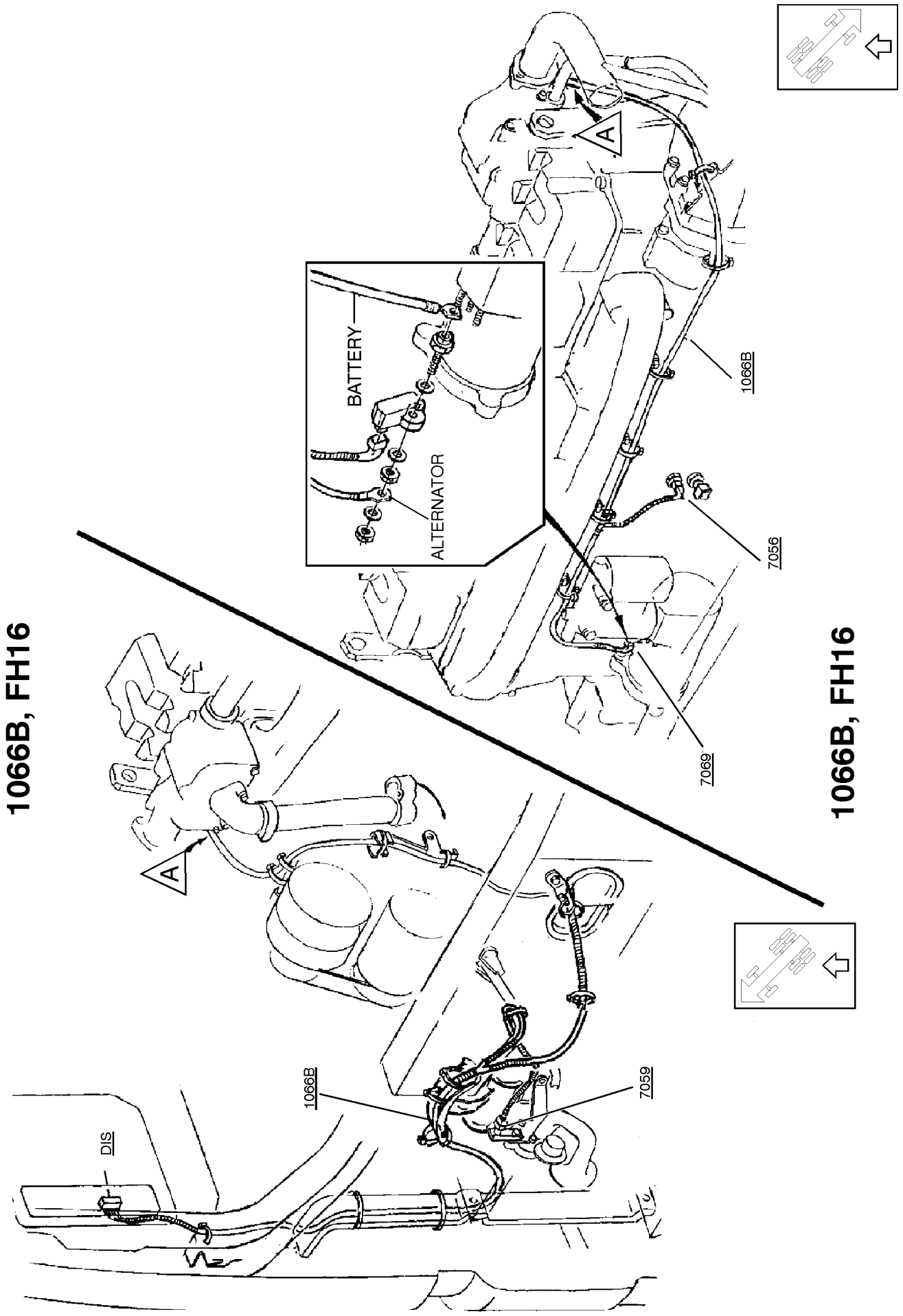
1066B, FH16
A
DIS
1066B
7059
BATTERY
ALTERNATOR
A
1066B
7056
7069
1066B, FH16
T3007978

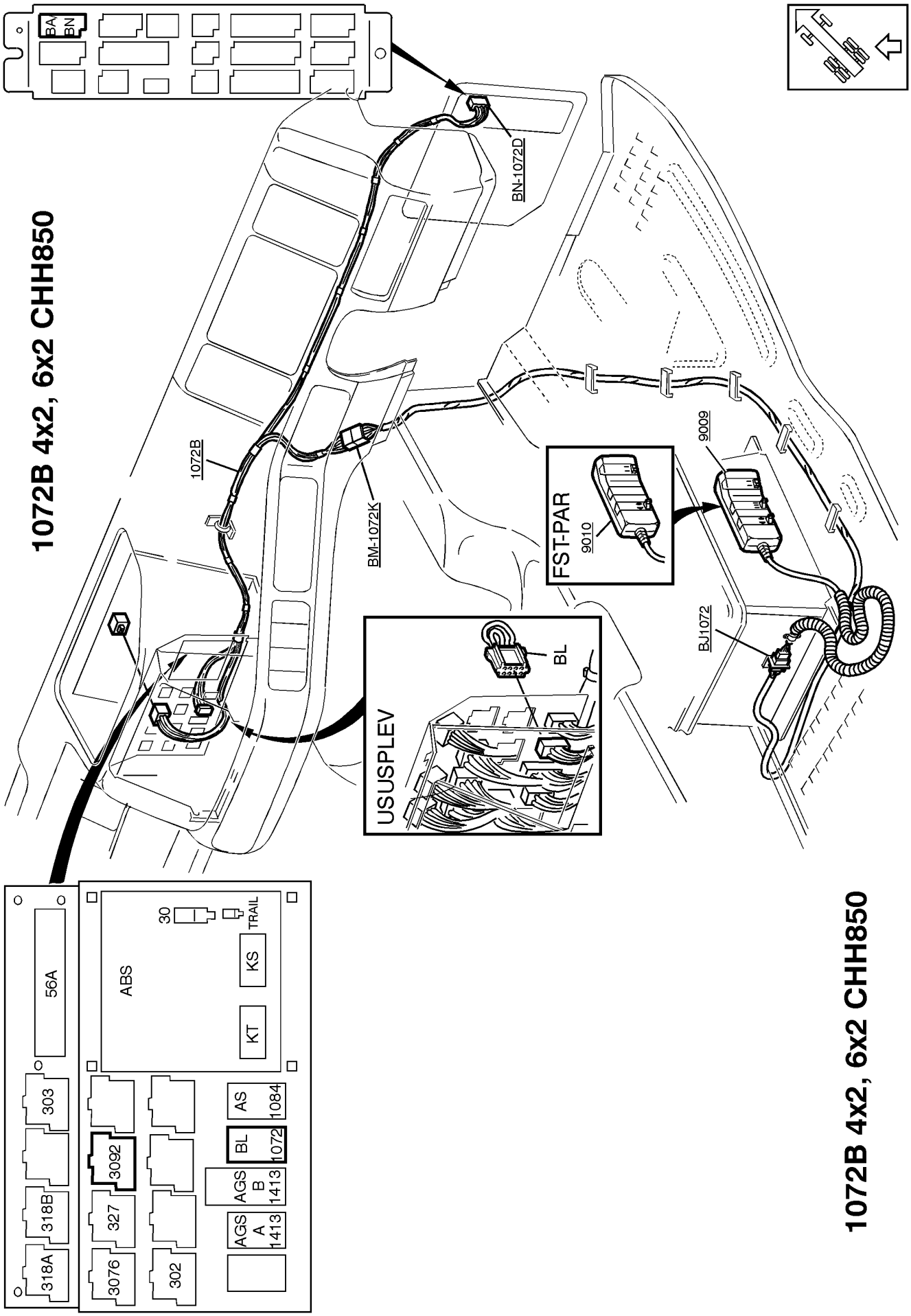

1072B 4x2, 6x2 CHH850

T3007980

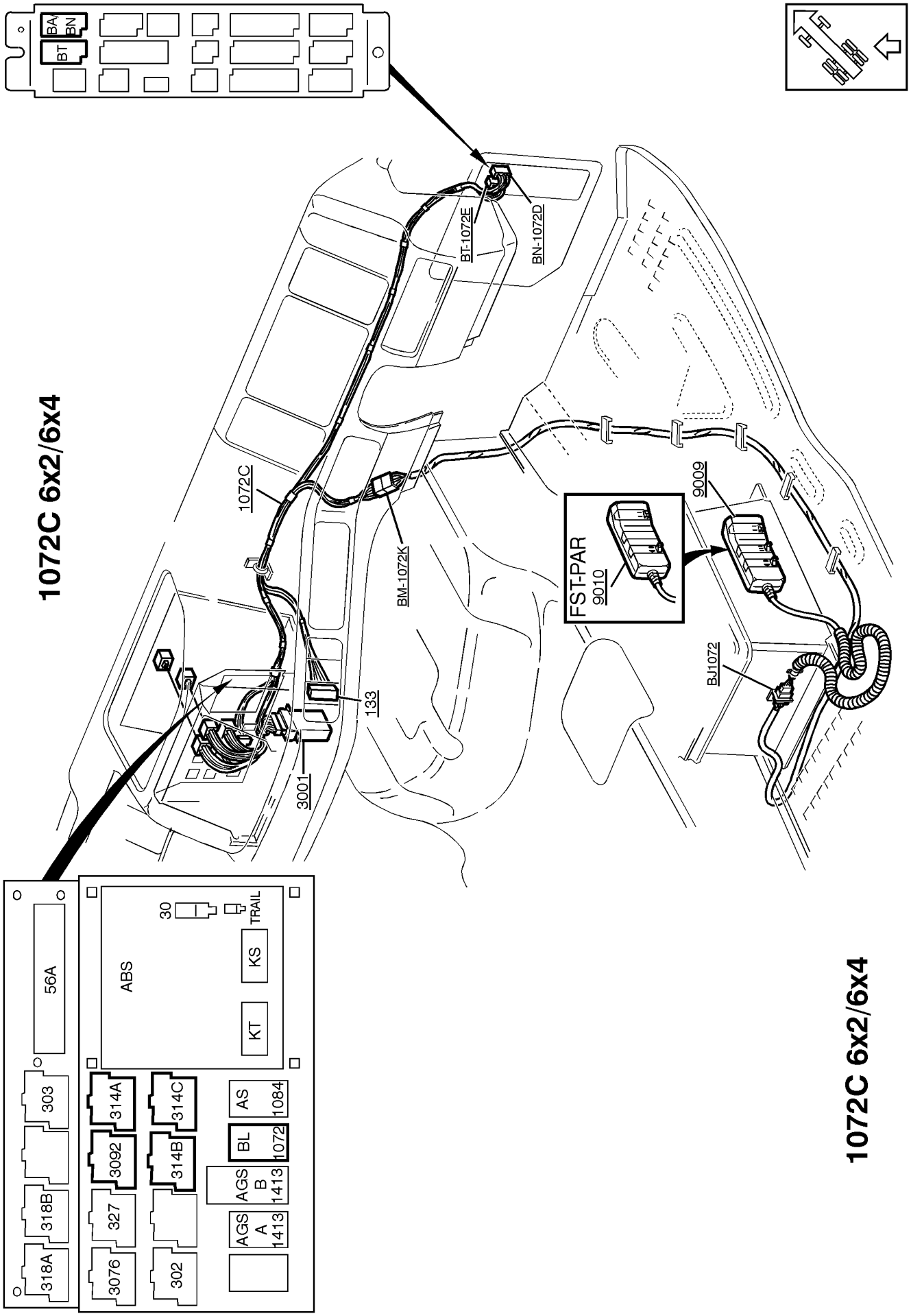
1072C 6x2/6x4
BA
BN
BT
BT-1072E
BN-1072D
1072C
BM-1072K
133
3001
FST-PAR
9010
9009
BJ1072
56A
303
318B
318A
ABS
30
TRAIL
KS
KT
314A
314C
3092
314B
327
302
3076
AS
1084
BL
1072
AGS
B
1413
AGS
A
1413
1072C 6x2/6x4
T3007982

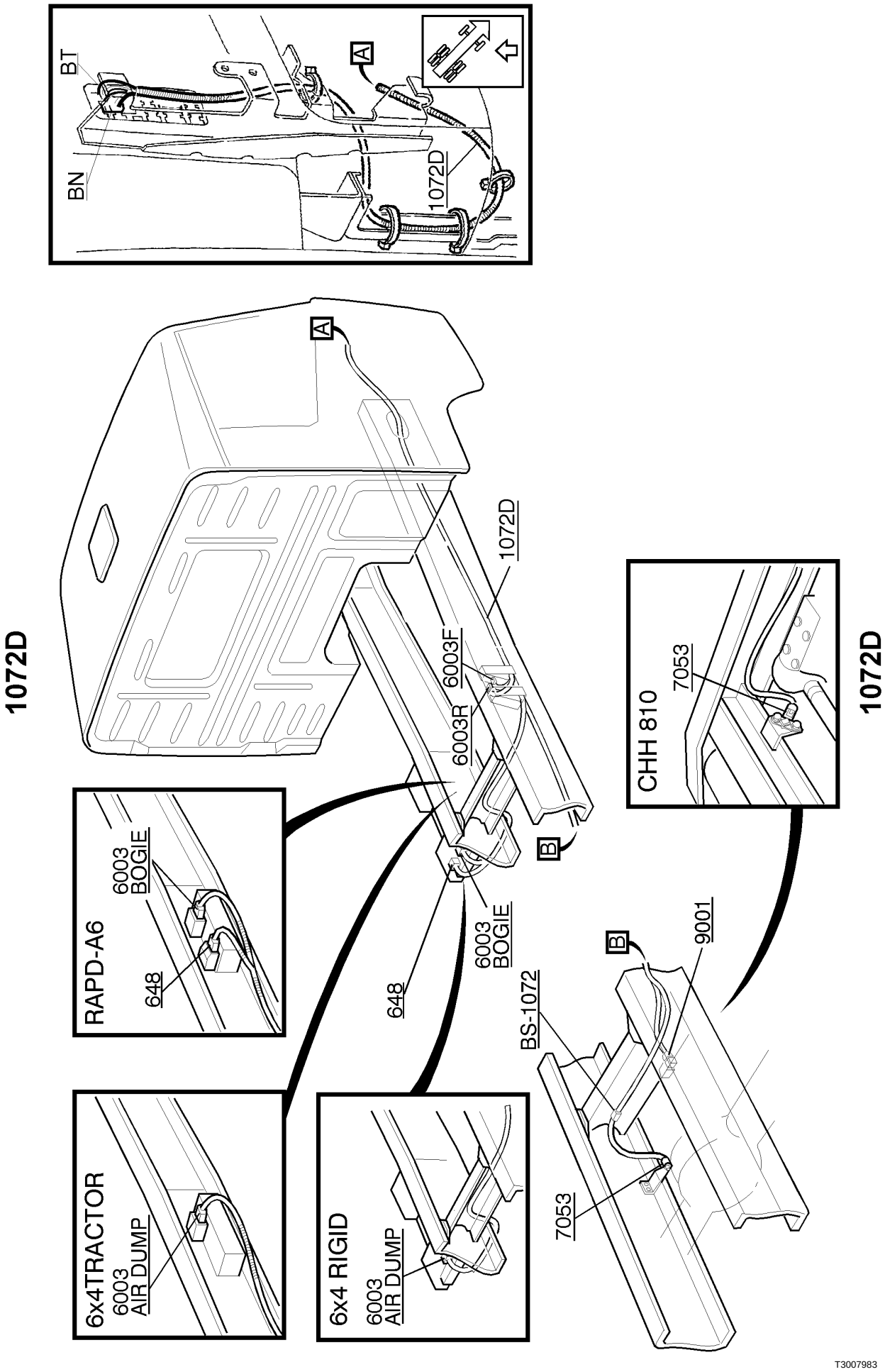
1072D
BT
BN
A
1072D
A
1072D
6003F
6003R
B
6003
BOGIE
648
RAPD-A6
6003
BOGIE
648
6x4TRACTOR
6003
AIR DUMP
6x4 RIGID
6003
AIR DUMP
BS-1072
B
9001
7053
CHH 810
7053
1072D
T3007983

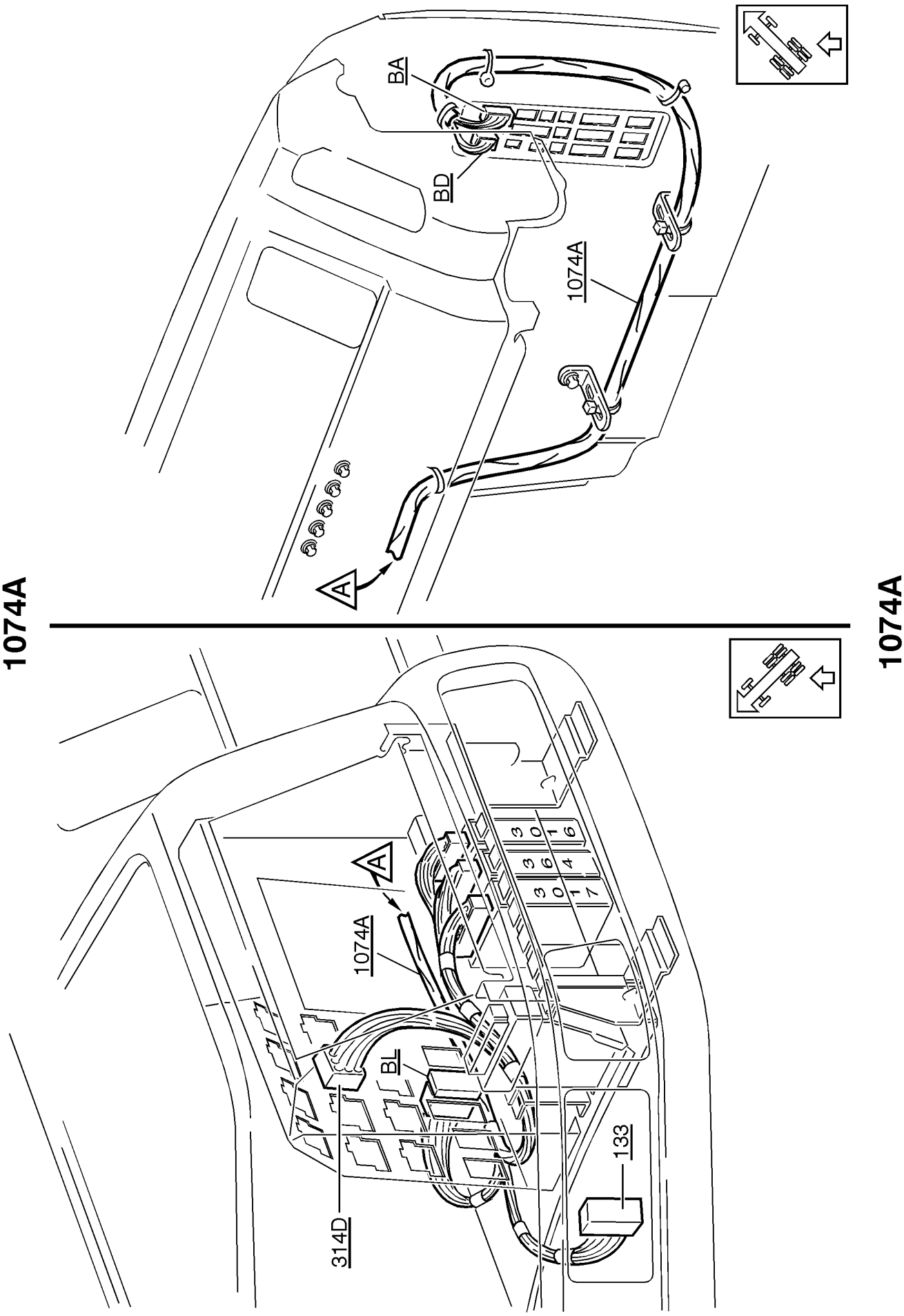
1074A
BA
BD
1074A
A
1074A
A
1074A
BL
314D
133
3 0 1 6
3 6 4
3 0 1 7
T3007985

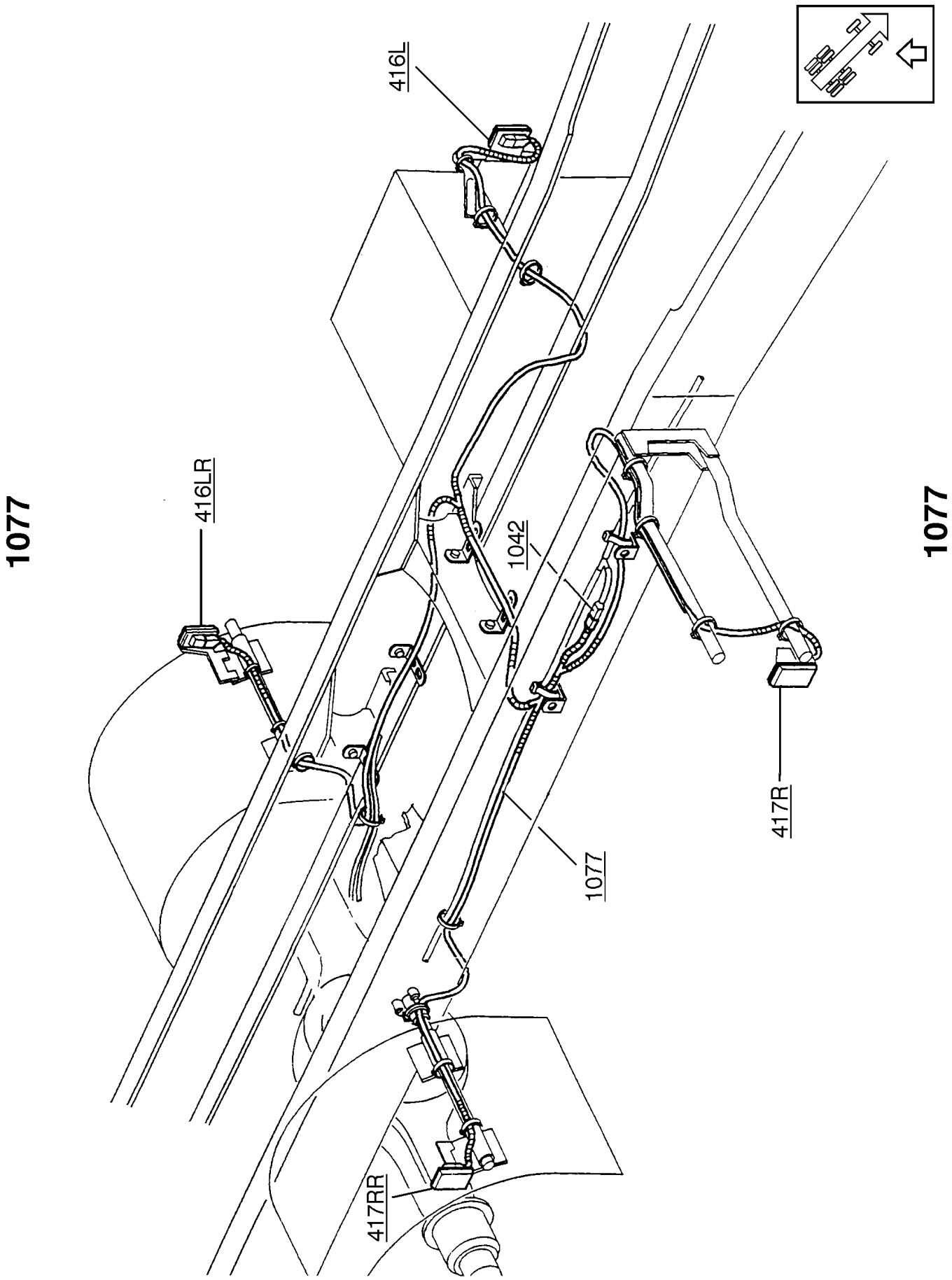

T3007986

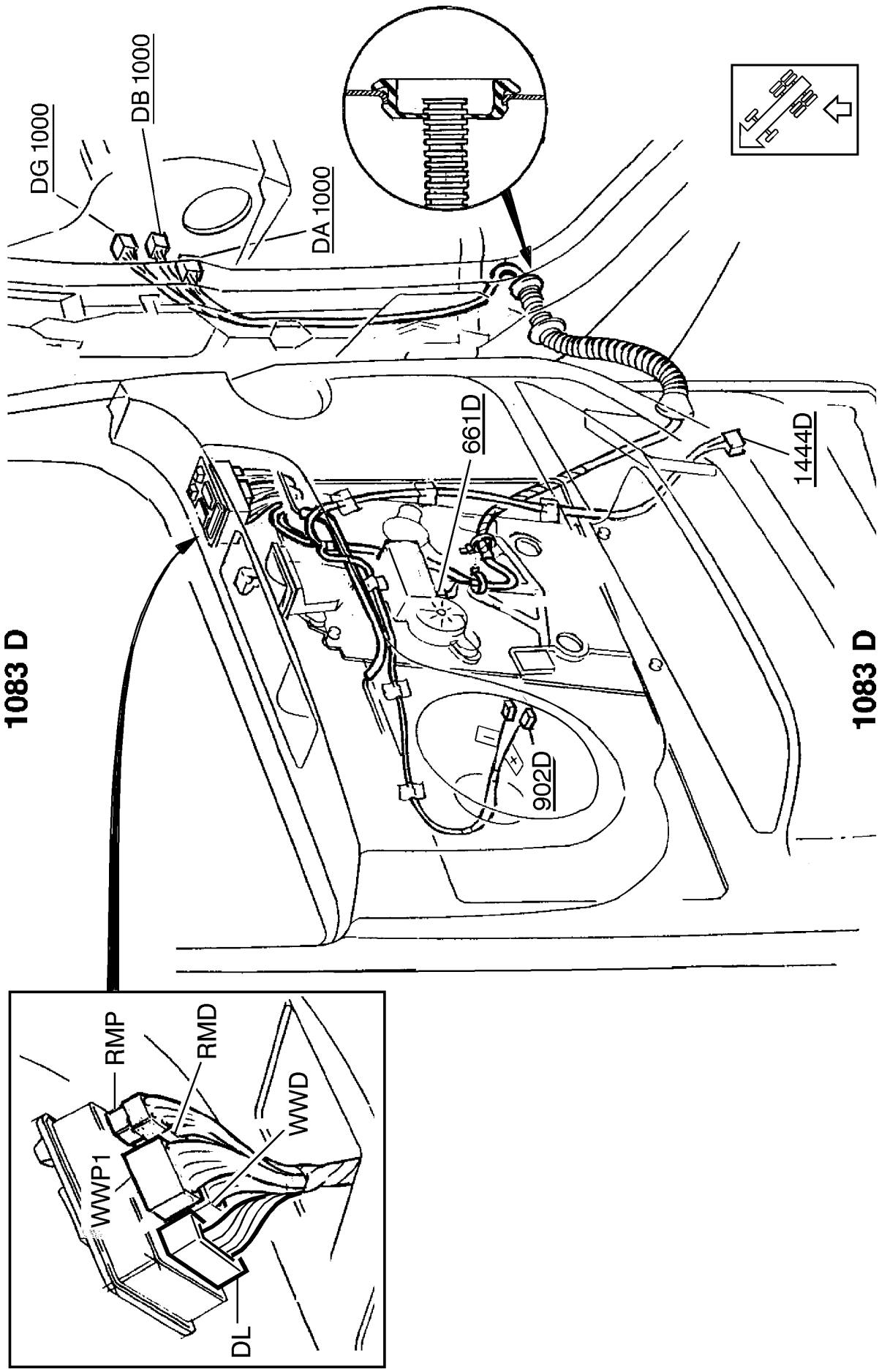
DG 1000
DB 1000
DA 1000
661D
1444D
902D
1083 D
1083 D
RMP
RMD
WWP1
WWD
DL

T3007987

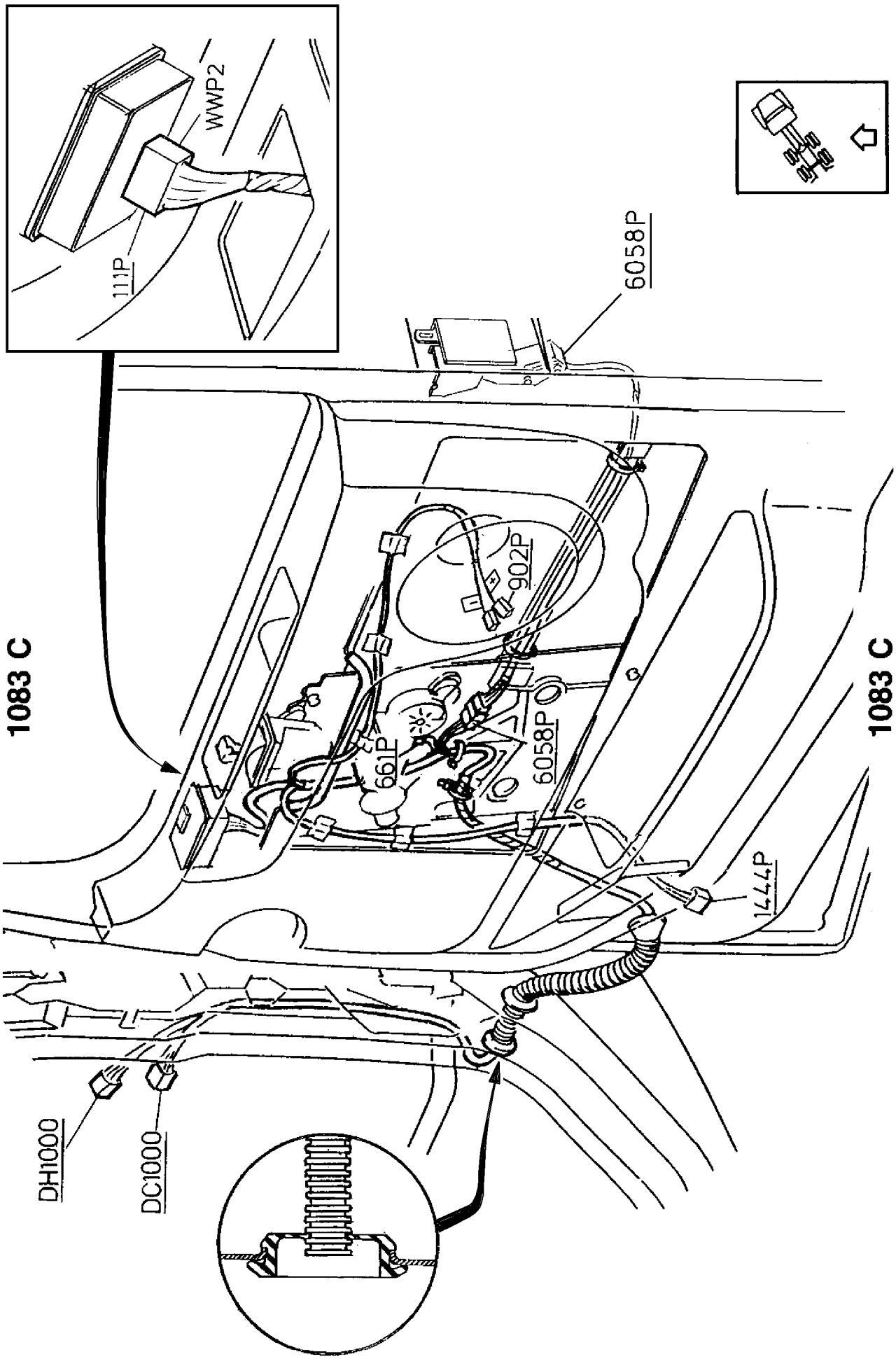
WWP2
111P
6058P
1083 C
902P
661P
6058P
1083 C
1444P
DH1000
DC1000

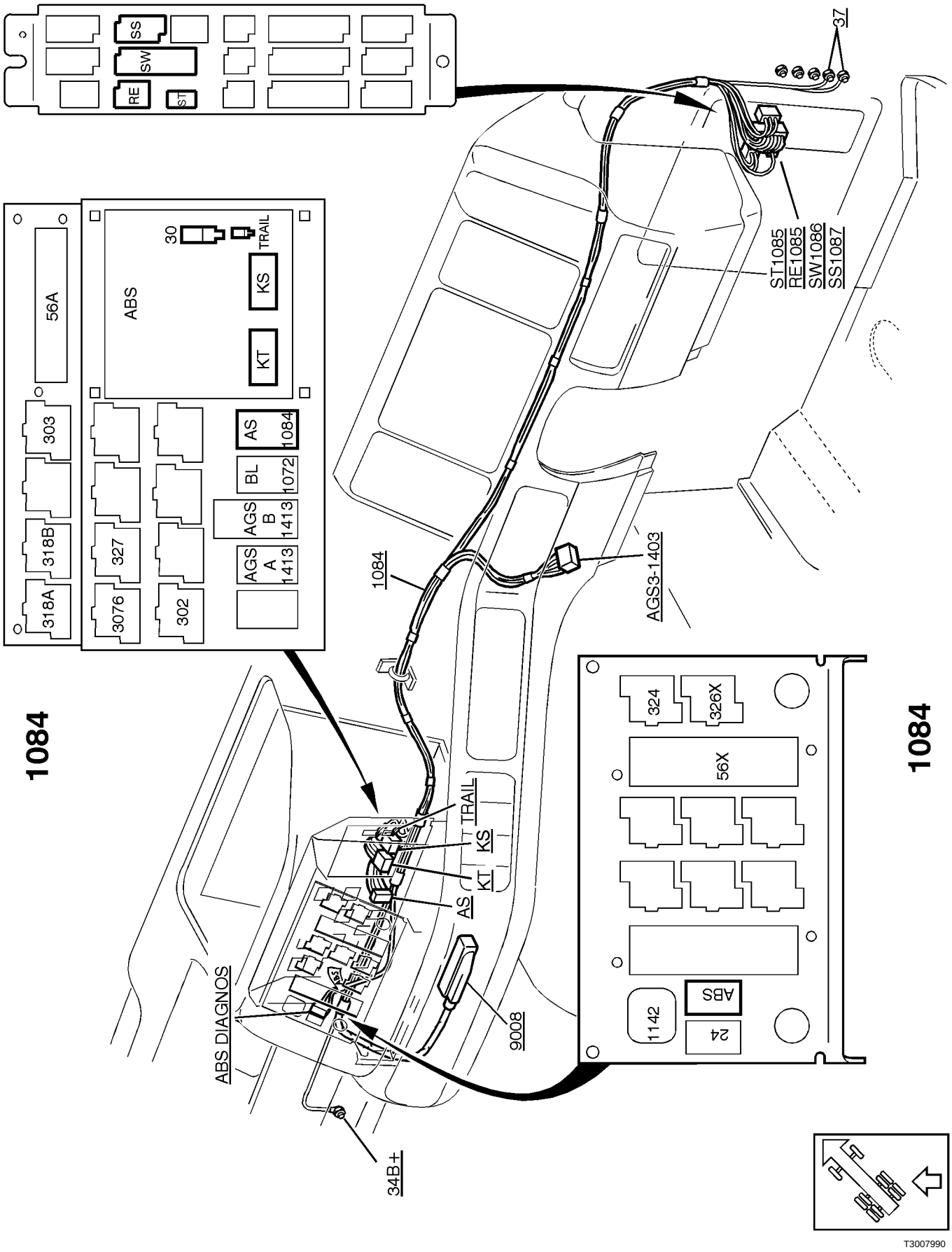
1084
56A
303
318B
318A
ABS
30
TRAIL
KS
KT
AS
1084
BL
1072
AGS B 1413
AGS A 1413
327
3076
302
SS
SW
RE
ST
37
ST1085
RE1085
SW1086
SS1087
1084
AGS3-1403
324
326X
56X
ABS
1142
24
1084
TRAIL
KS
KT
AS
ABS DIAGNOS
9008
34B+

T3007990

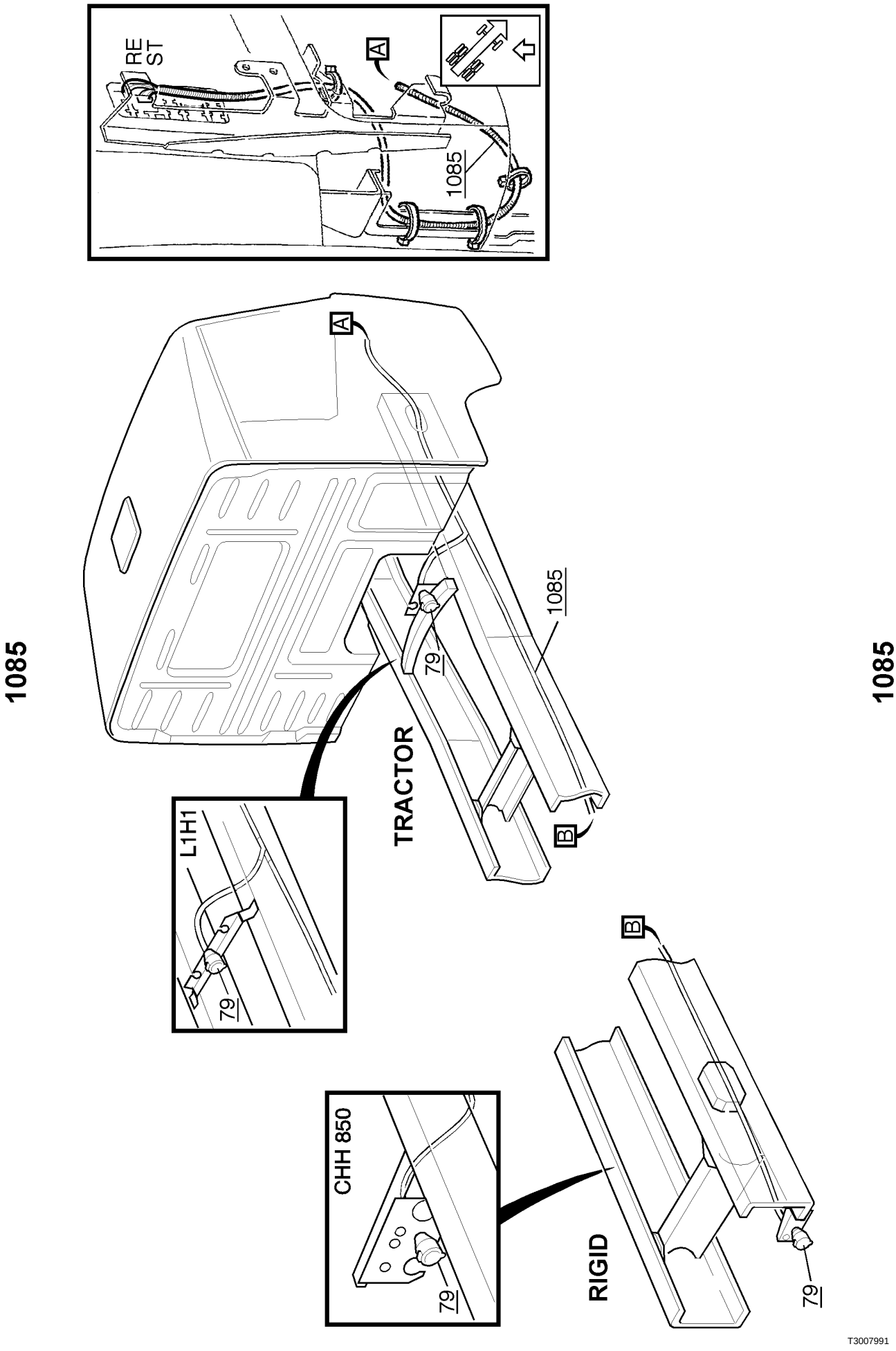
1085
RE
ST
A
1085
A
1085
79
TRACTOR
B
L1H1
79
B
CHH 850
79
RIGID
79
1085
T3007991

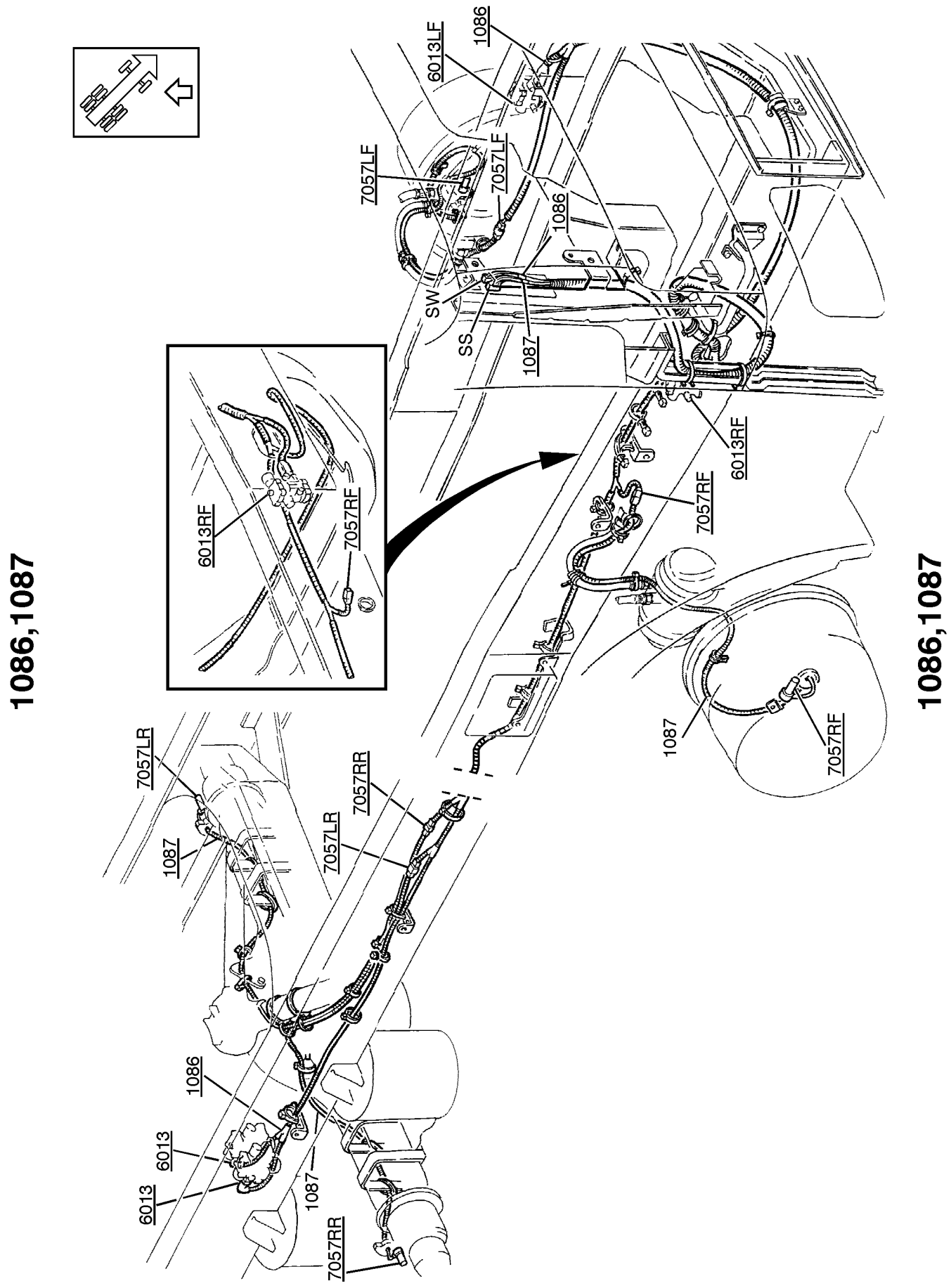
1086,1087
6013RF
7057RF
7057LF
7057LF
6013LF
1086
1086
SW
SS
1087
6013RF
7057RF
1087
7057RF
7057LR
1087
7057RR
7057LR
1086
6013
6013
1087
7057RR
1086,1087
T3007992

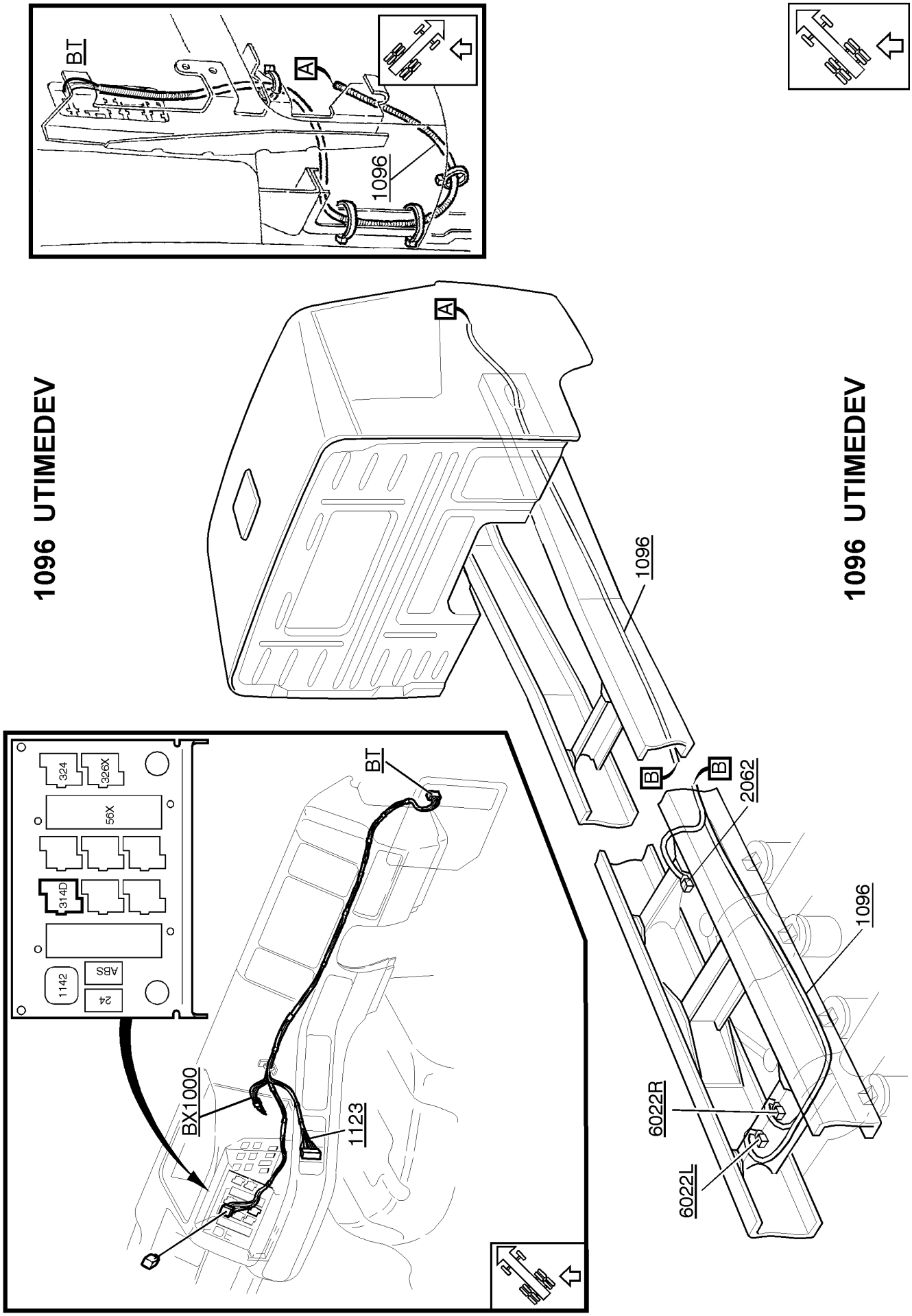
1096 UTIMEDEV
1096 UTIMEDEV
BT
A
1096
A
1096
B
B
2062
1096
6022R
6022L
BT
BX1000
1123
324
326X
56X
314D
1142
ABS
24

T3007994

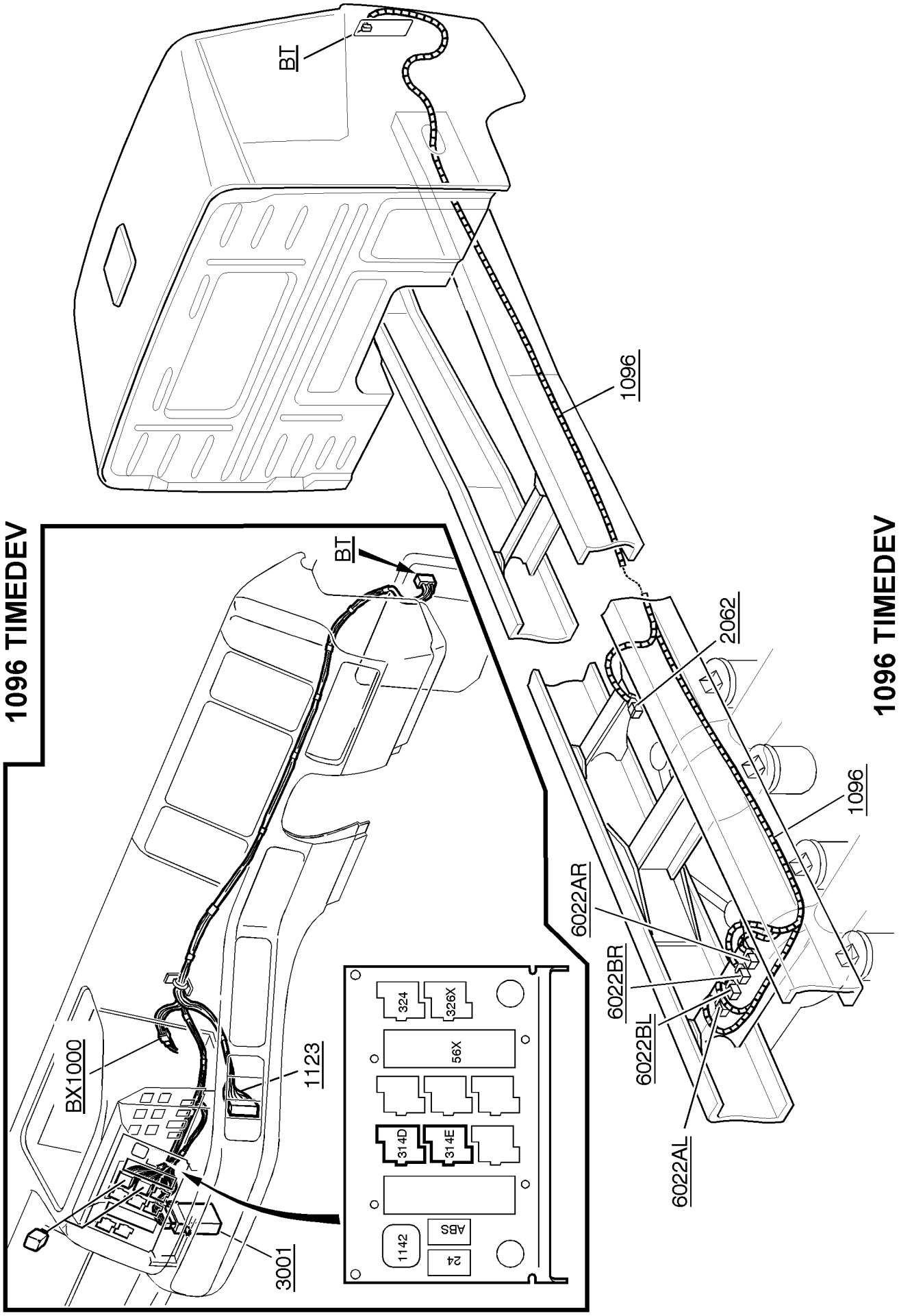
1096 TIMEDEV
BT
BX1000
1123
3001
324
326X
56X
314D
314E
ABS
1142
24
1096
2062
6022AR
6022BR
6022BL
6022AL
1096 TIMEDEV
T3007996

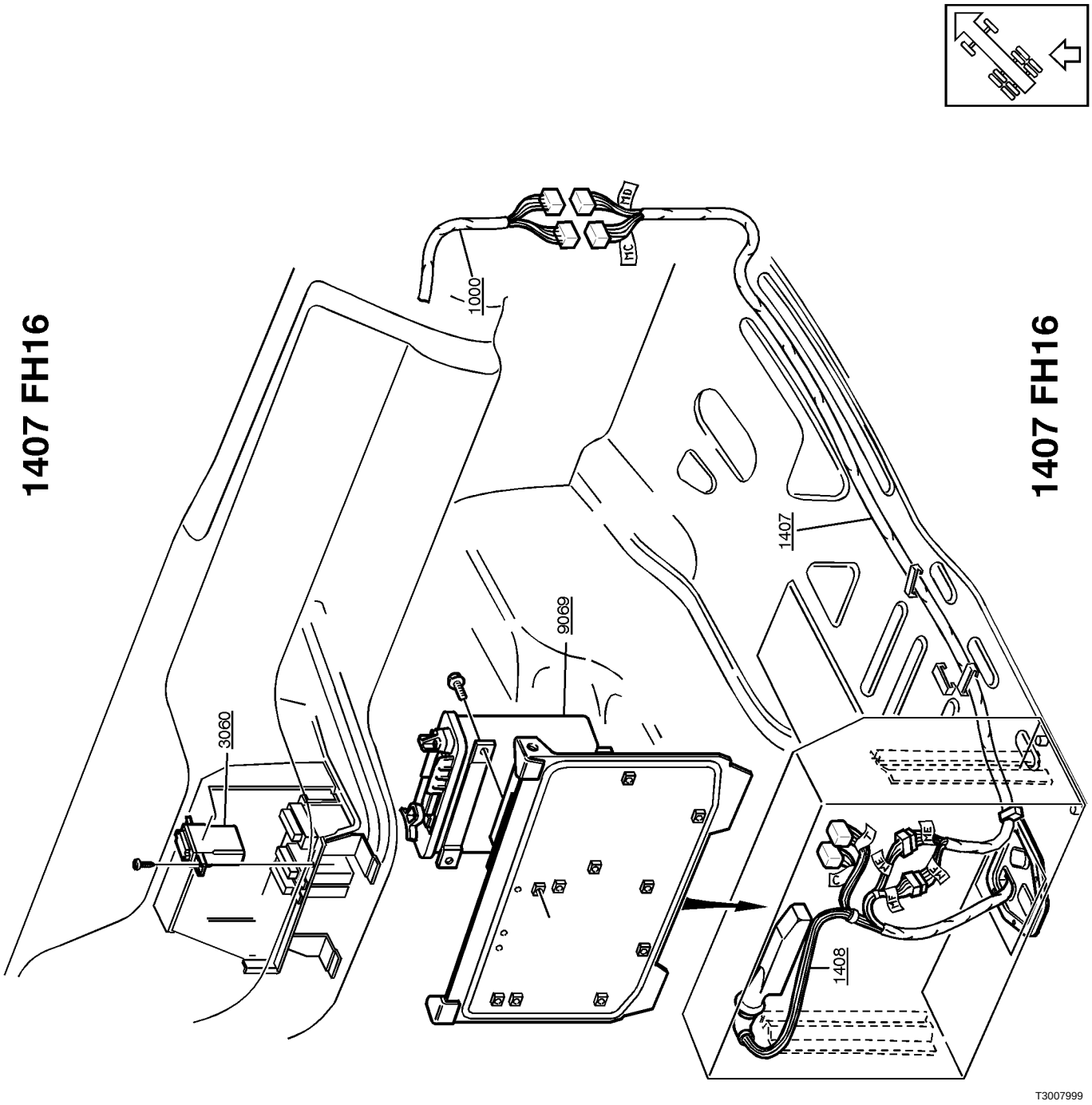
1407 FH16
1000
H1C
H1D
3060
9069
1407
1408
H1
H1E
1407 FH16
T3007999

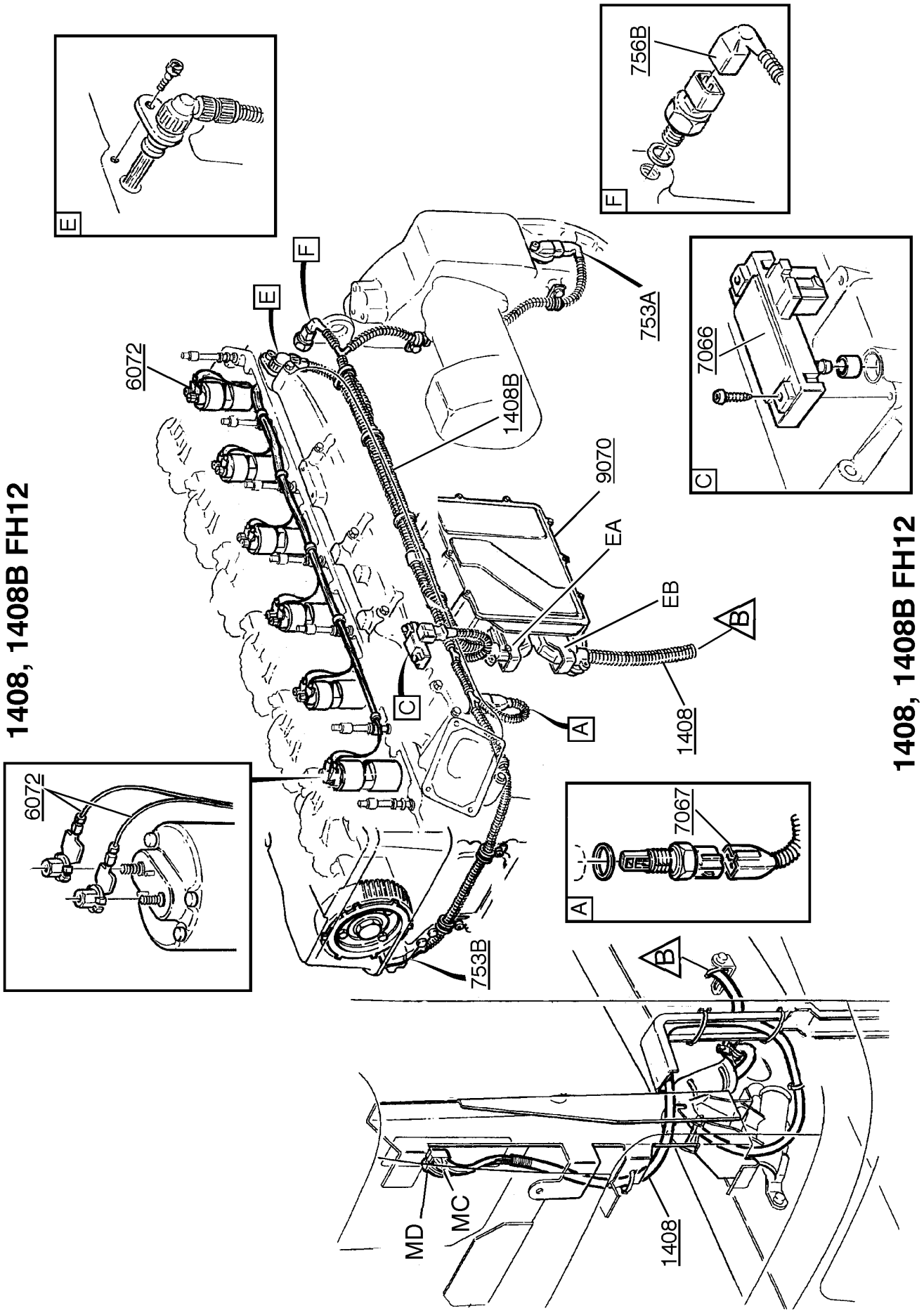
1408, 1408B FH12
6072
E
F
753A
1408B
9070
EA
EB
C
A
B
1408
753B
7066
756B
7067
MD
MC
1408, 1408B FH12

T3008000

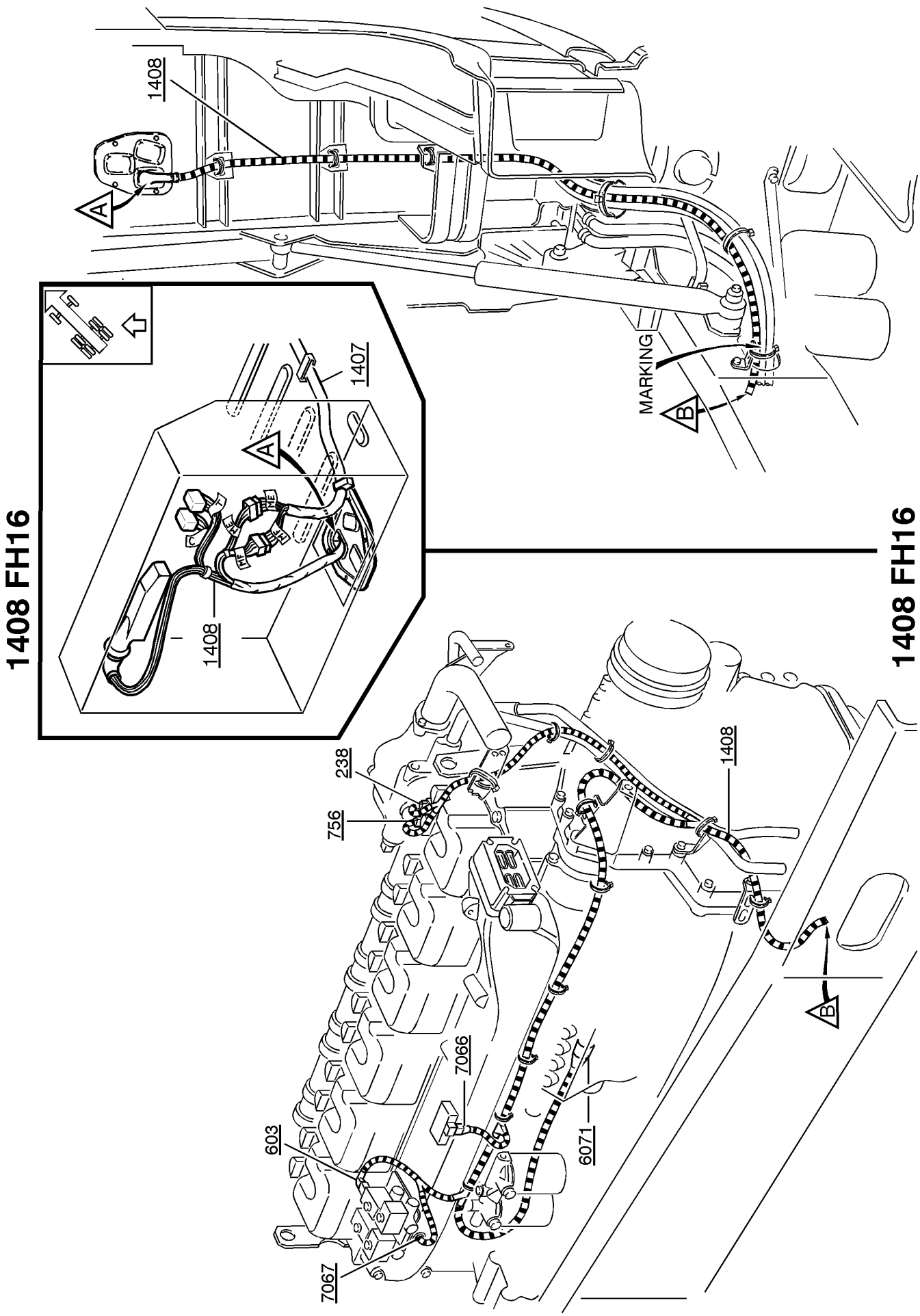
1408 FH16
1408
1407
A
1408
MARKING
B
1408 FH16
238
756
1408
7066
603
6071
7067
B
T3008002

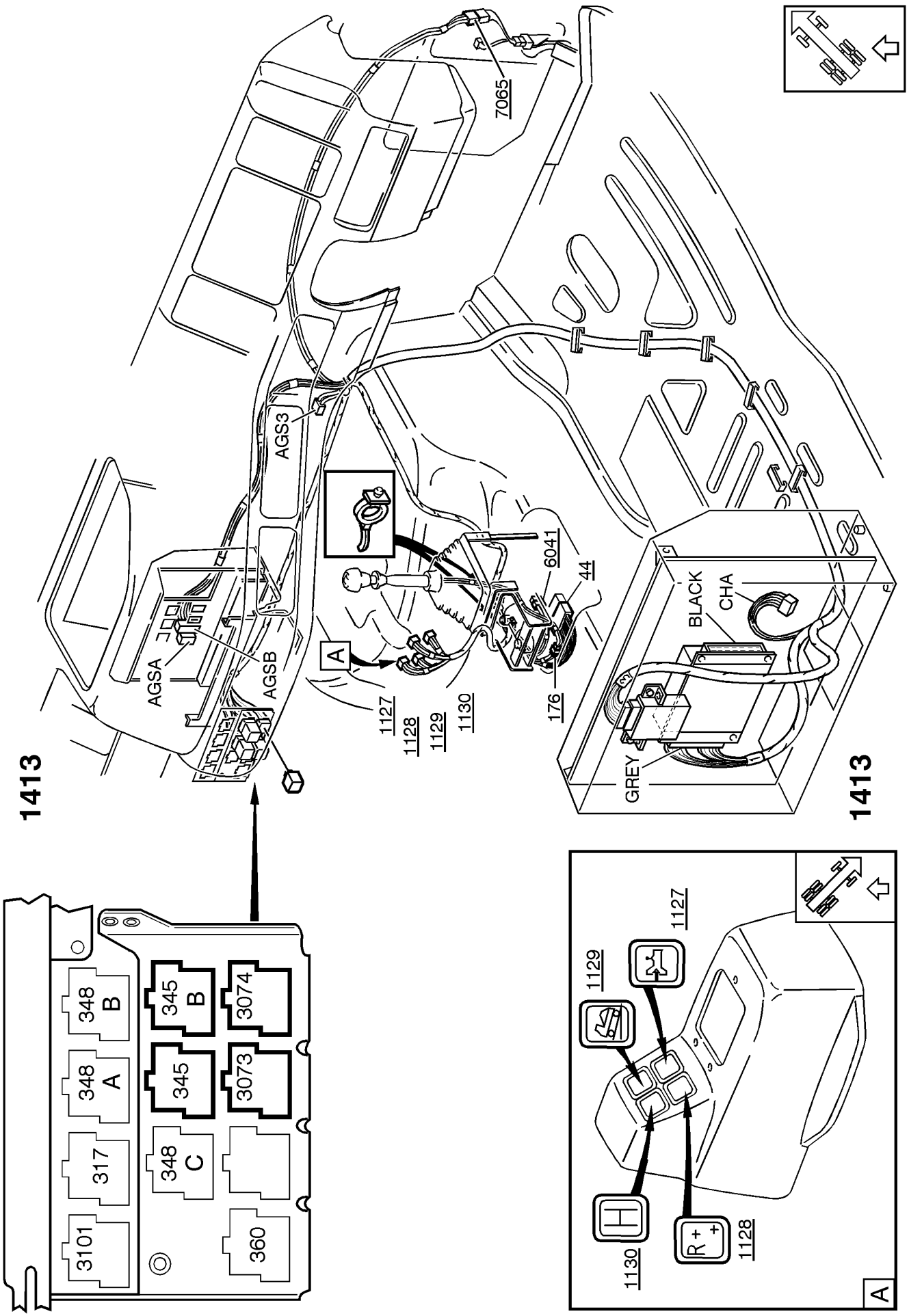
1413
7065
AGS3
AGSA
AGSB
A
1127
1128
1129
1130
6041
44
176
BLACK
CHA
GREY
1413
3101
317
348 A
348 B
348 C
345
345 B
3073
3074
360
1129
1127
1130
1128
A

T3008006

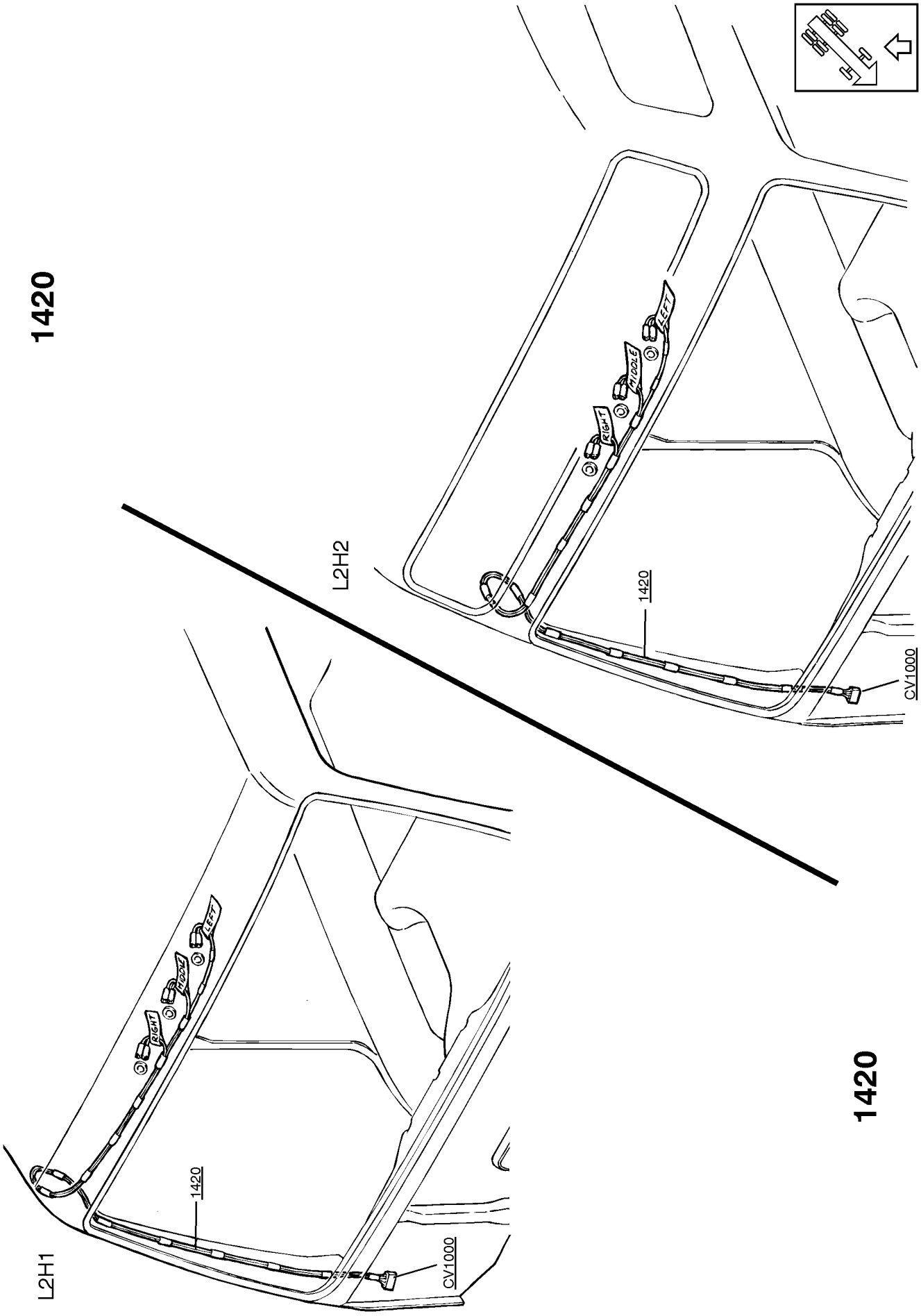
1420
L2H2
1420
CV1000
RIGHT
MIDDLE
LEFT
L2H1
1420
CV1000
RIGHT
MIDDLE
LEFT
1420

T3008007

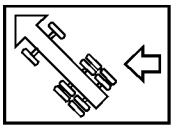

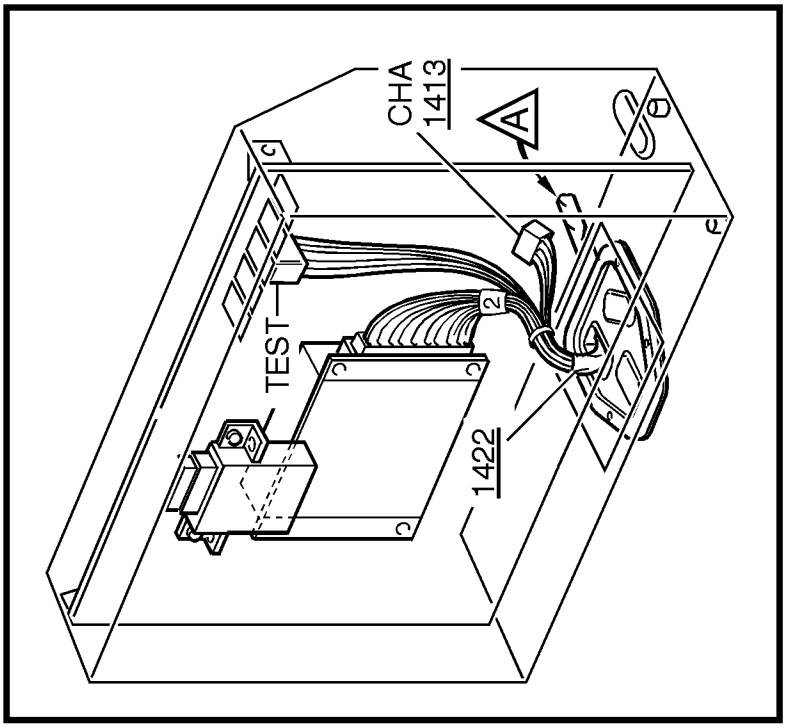

1422

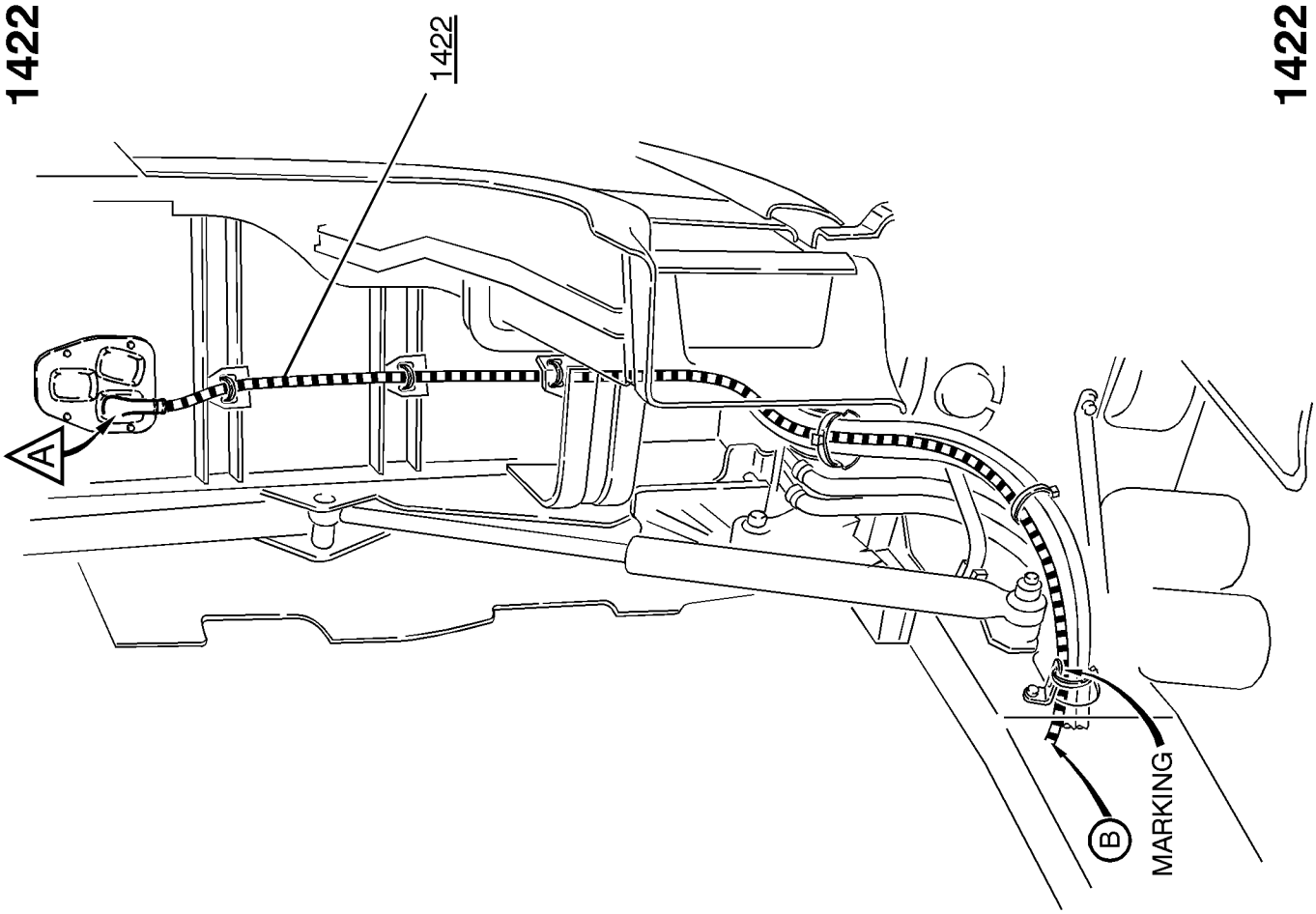

1422

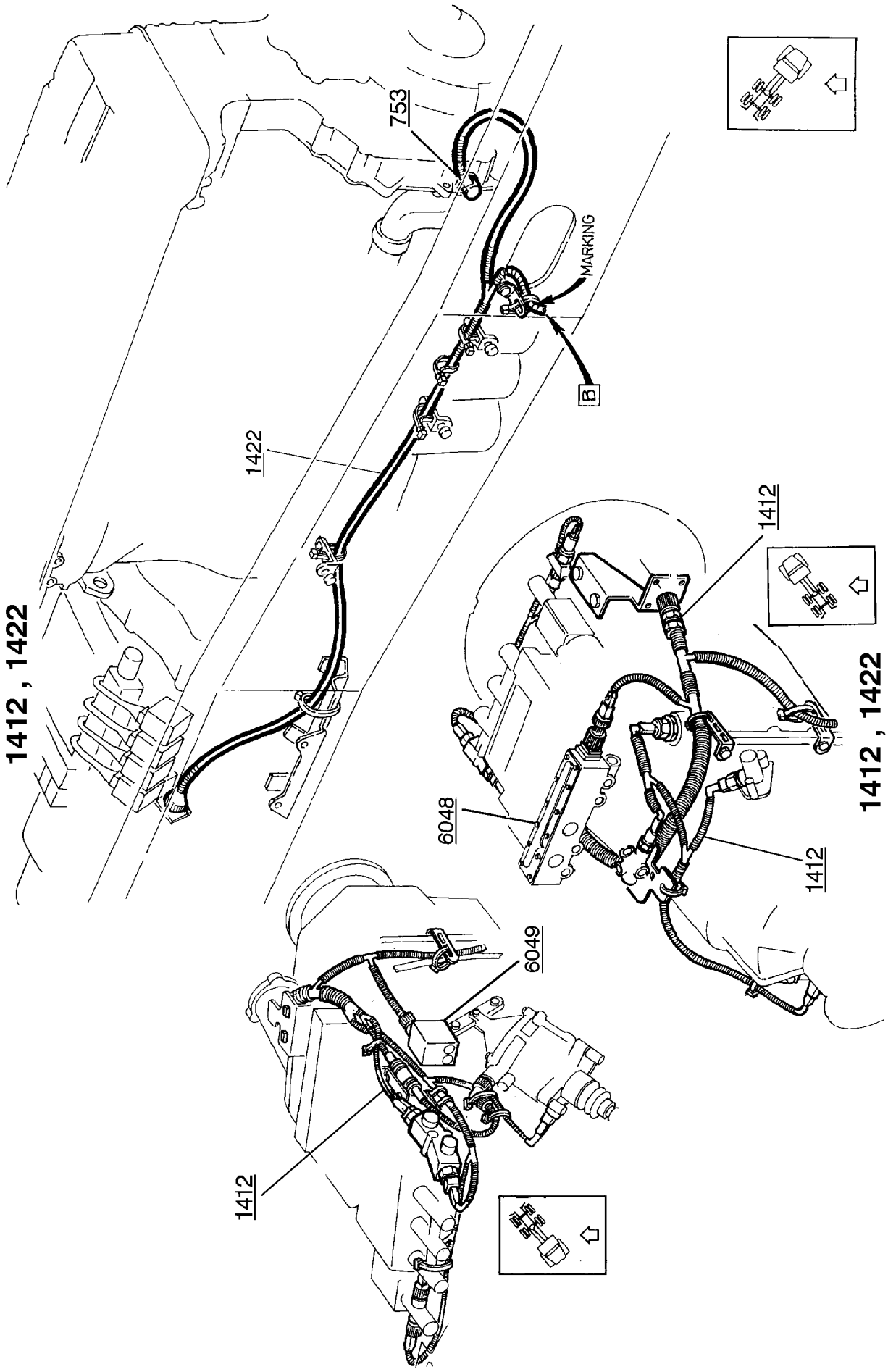
1412 , 1422
753
MARKING
B
1422
1412
6048
1412
1412 , 1422
6049
1412

T3008009

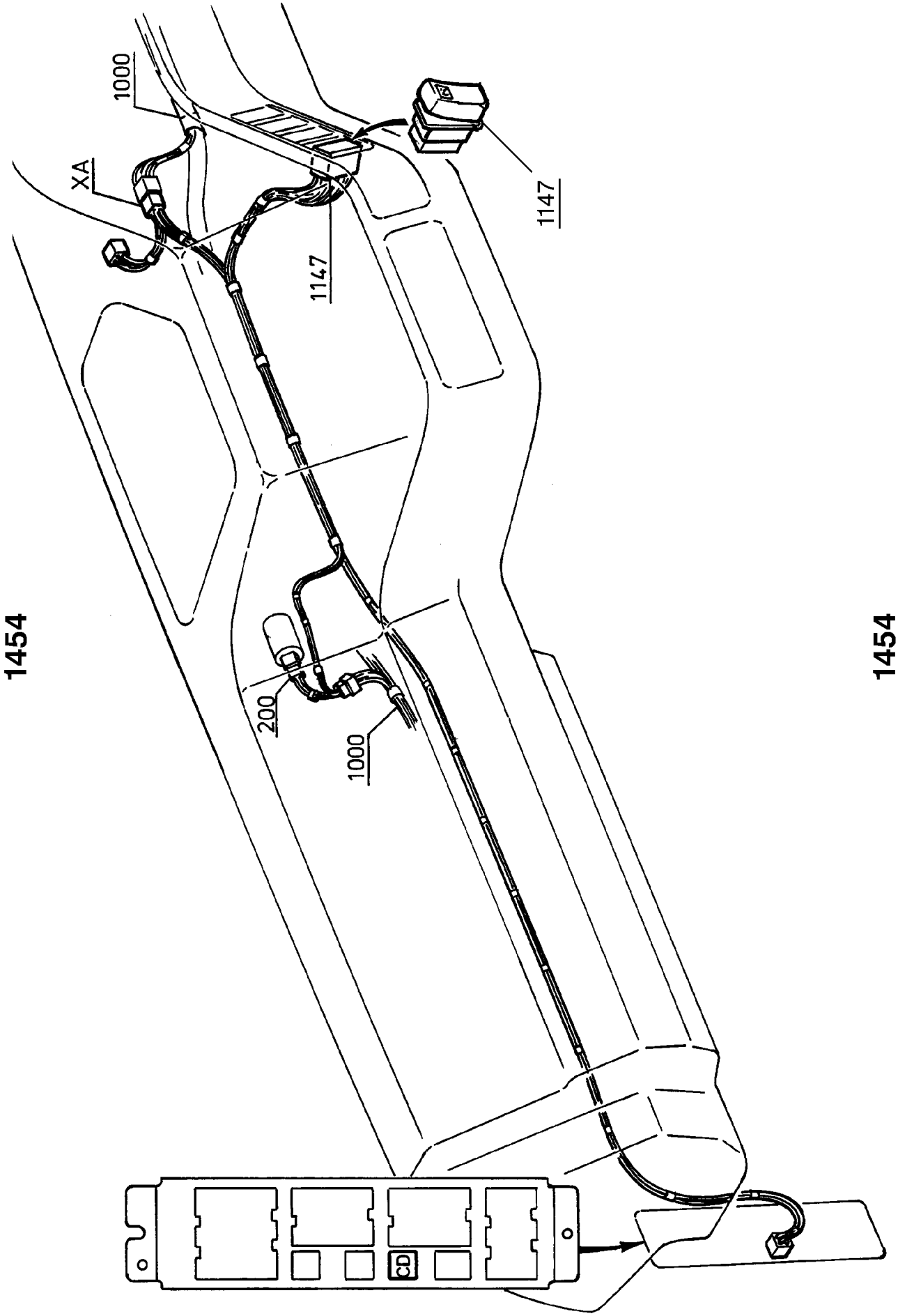
1454
1000
XA
1147
1147
200
1000
1454
T3007455

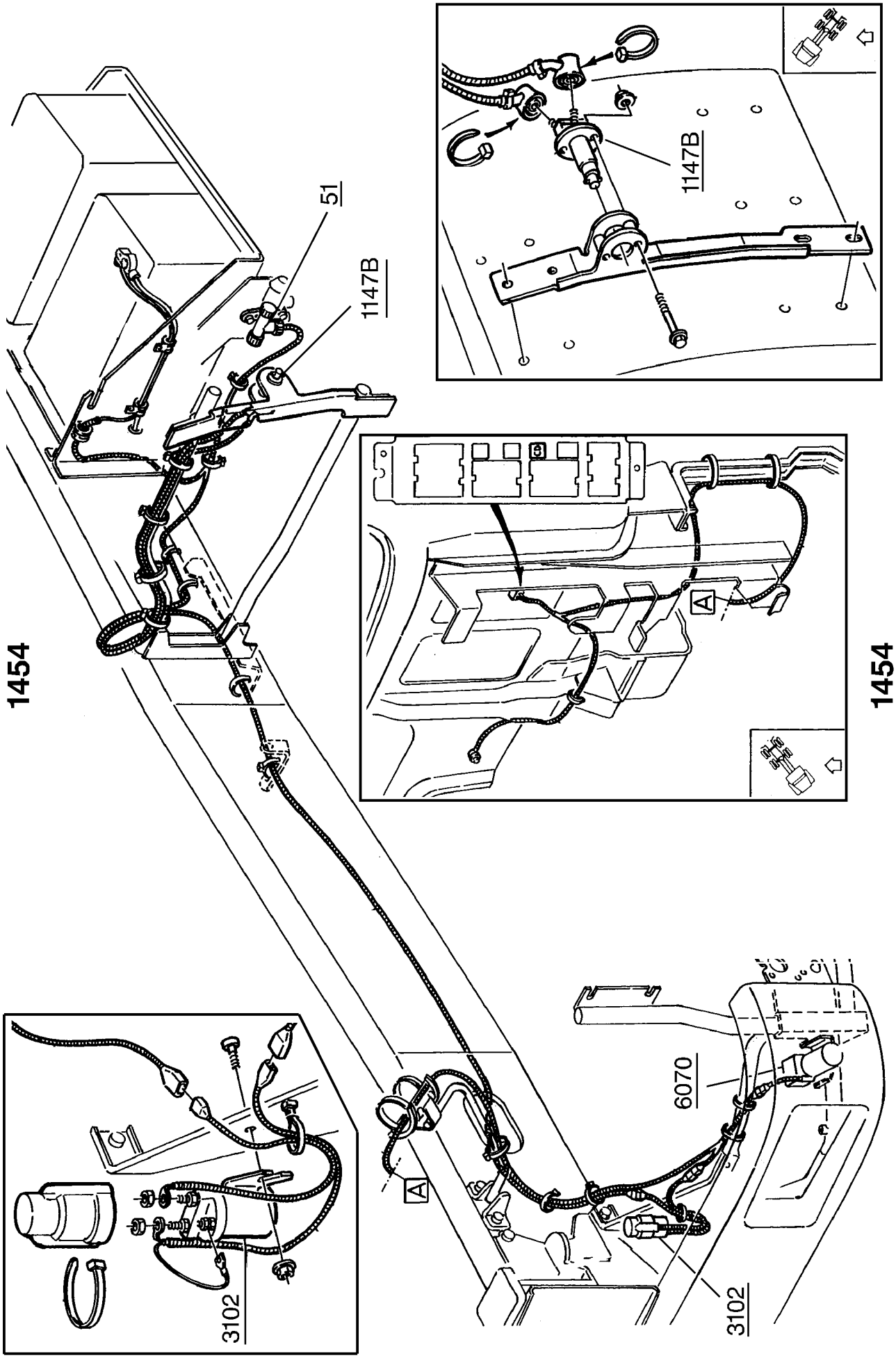
1454
51
1147B
1147B
A
A
6070
3102
3102
1454

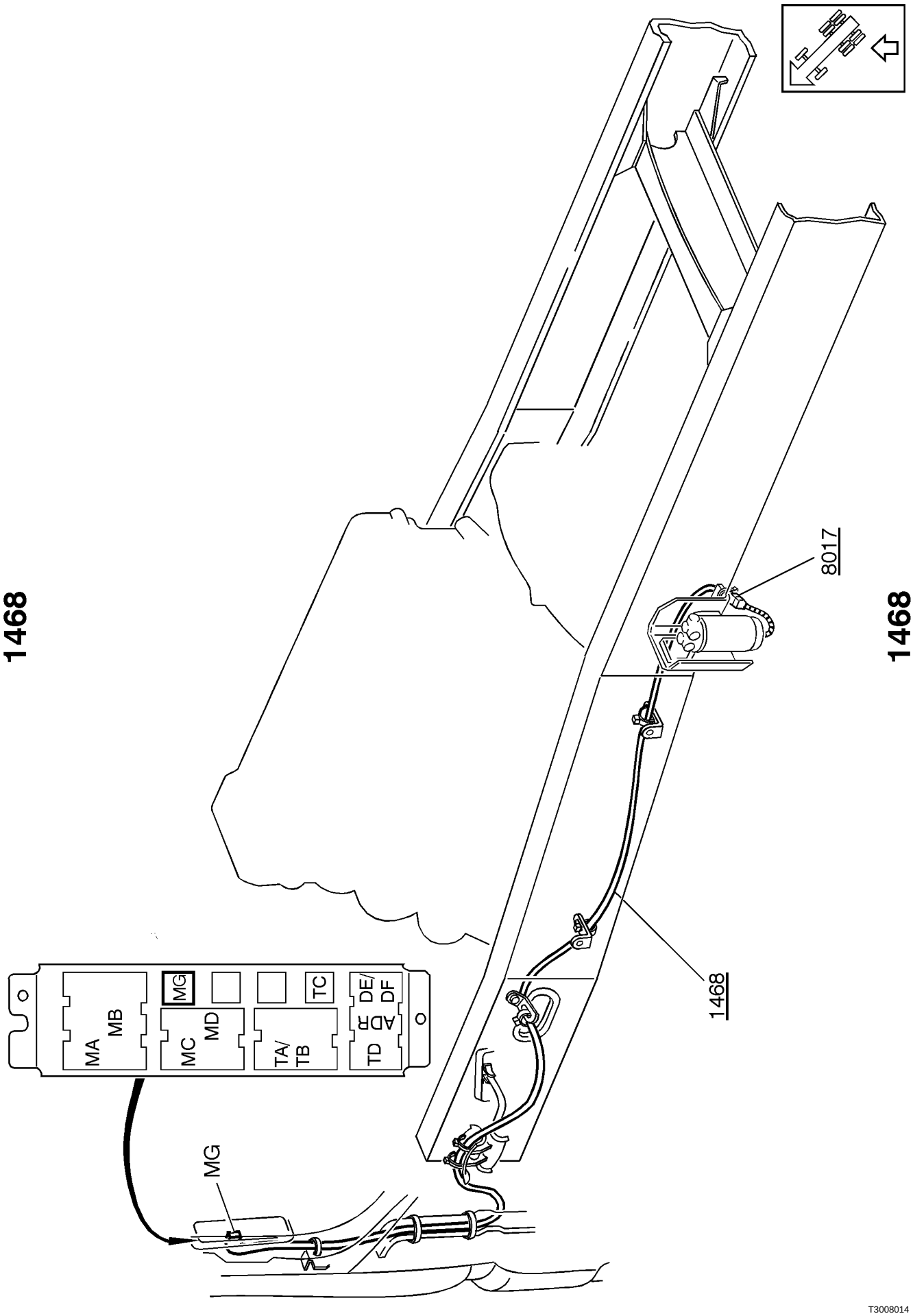
1468
8017
1468
1468
MA
MB
MC
MD
MG
TA/
TB
TC
TD
AD
DE/
DF
MG
T3008014

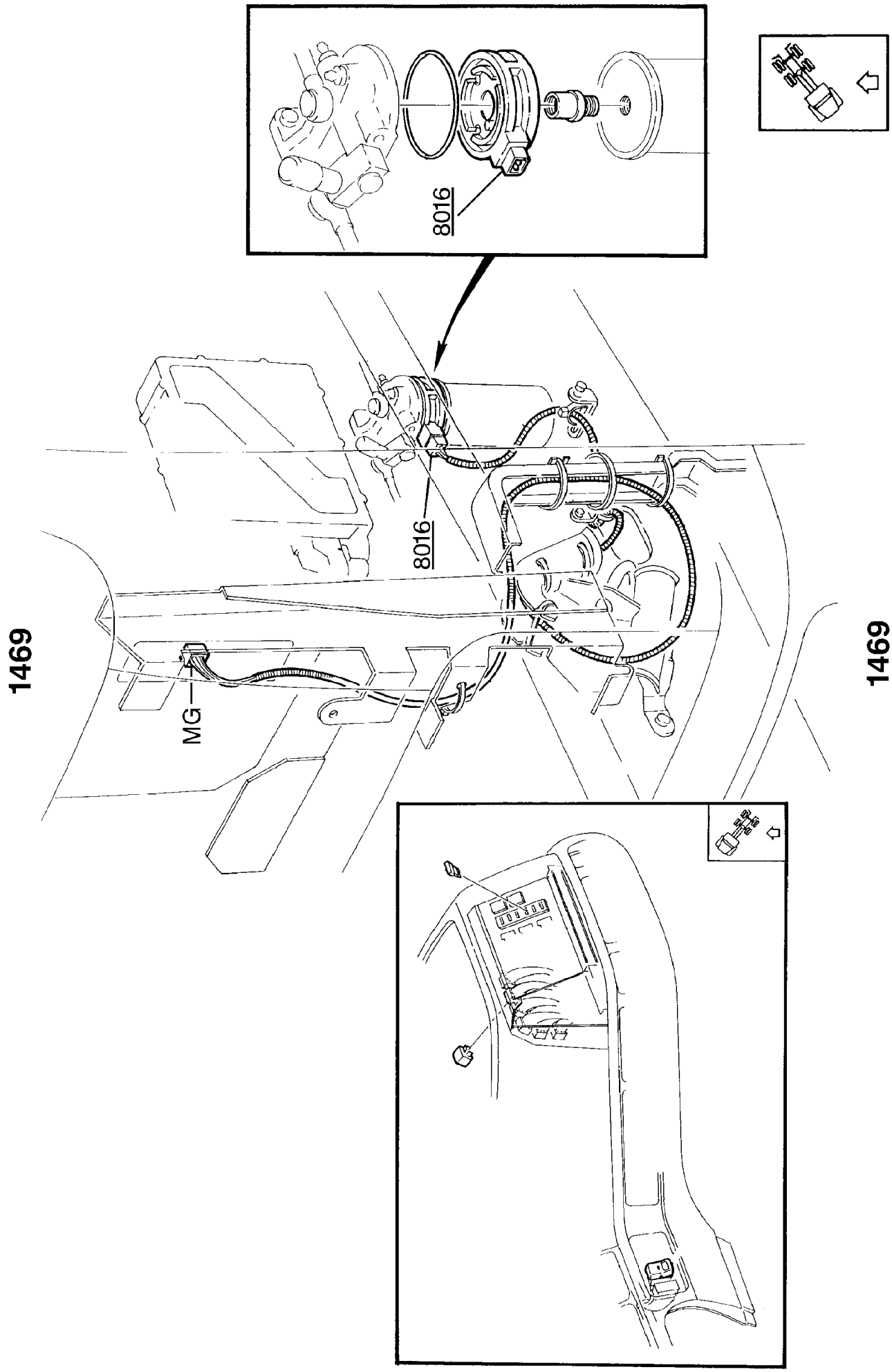
1469
MG
8016
8016
1469

Circuit board (32) electrical centre

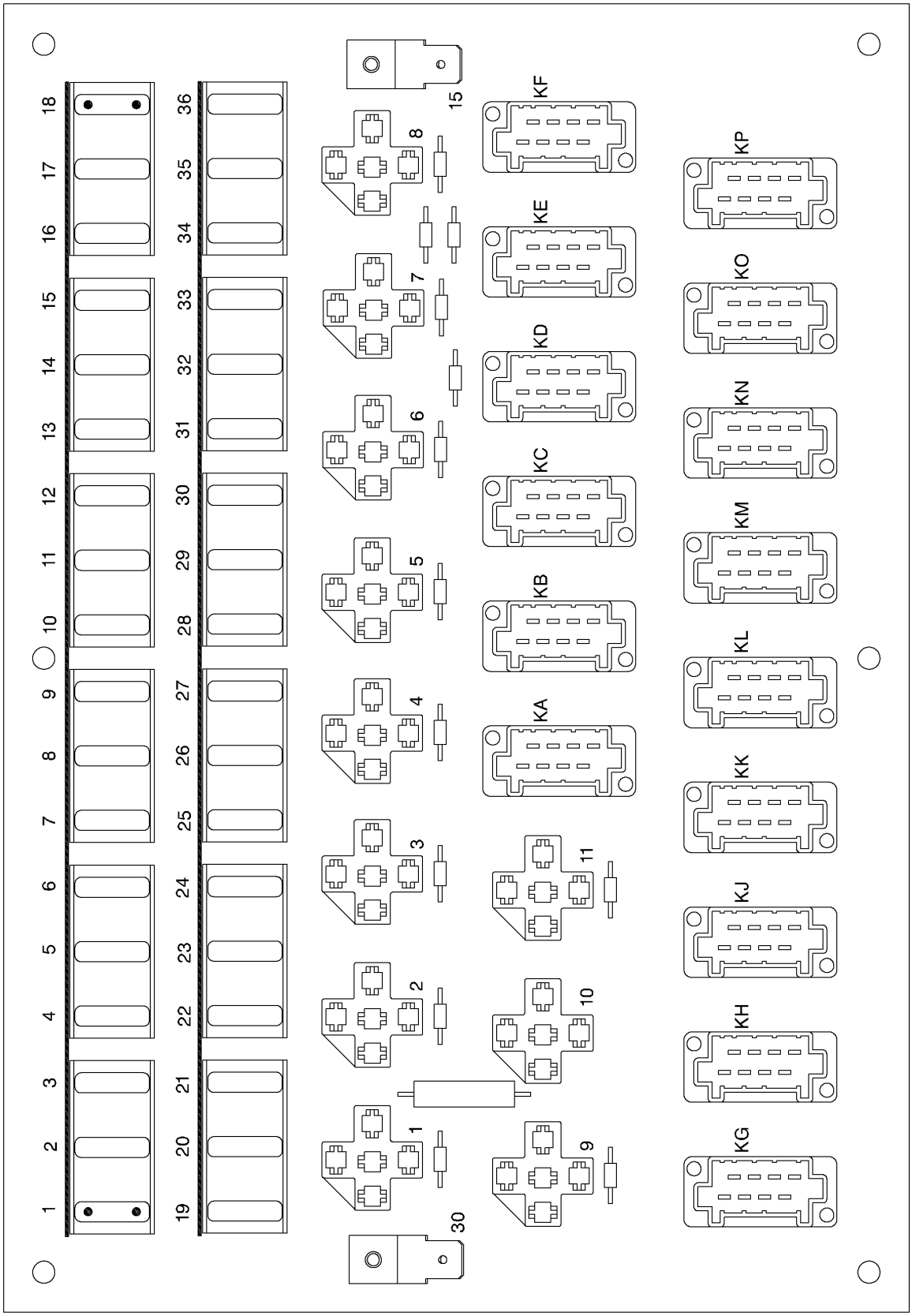

T3007178

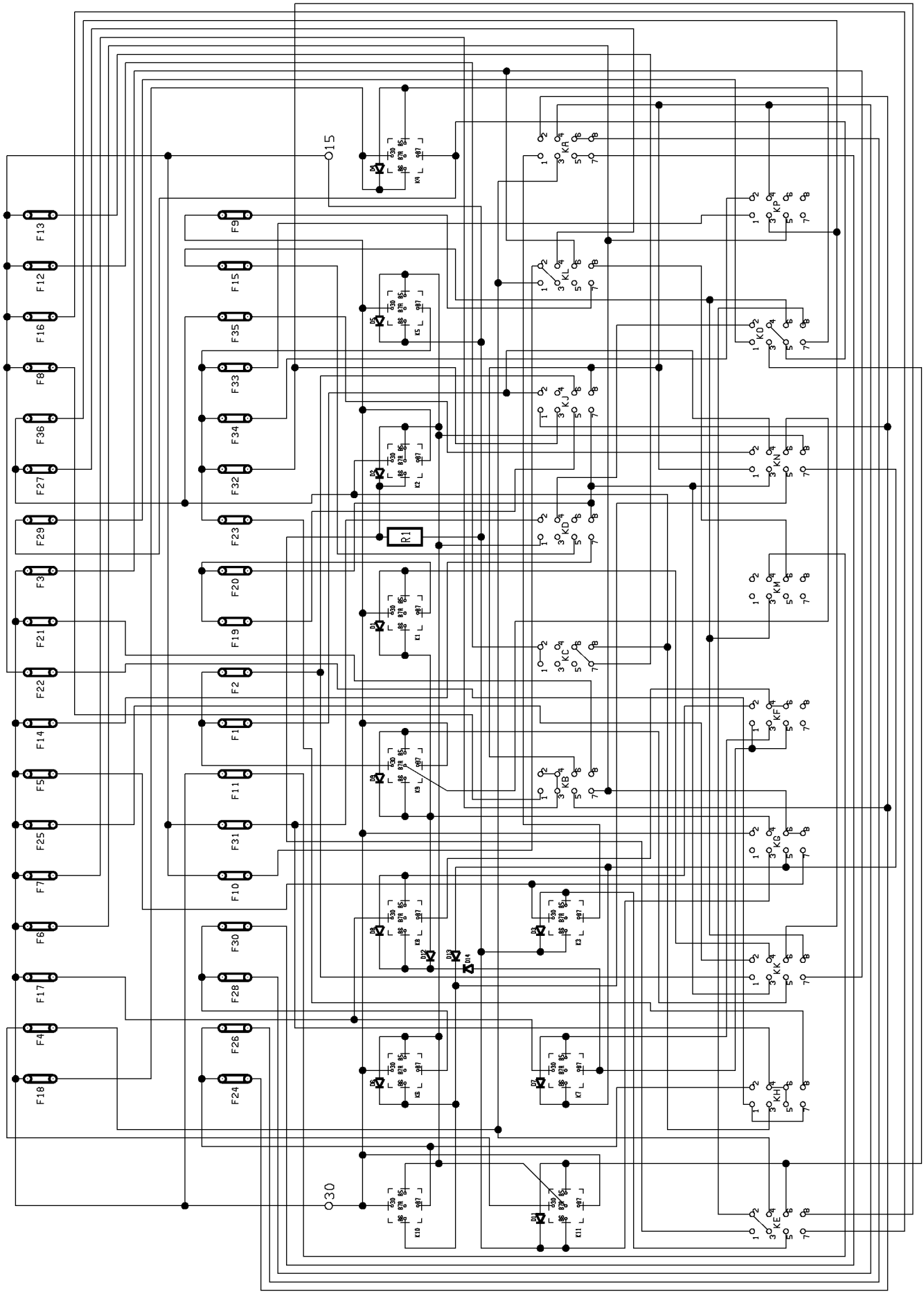
F13
F12
F16
F8
F36
F27
F29
F3
F21
F22
F14
F5
F25
F7
F6
F17
F4
F18
F9
F15
F35
F33
F34
F32
F23
F20
F19
F2
F1
F11
F31
F10
F30
F28
F26
F24
15
30
R1
KA
KP
KL
KO
KJ
KN
KD
KM
KC
KF
KB
KG
KK
KH
KE

Fuses on circuit board (32) electrical centre

FI	Dipped beam, left	(CE49)(OA45)(ZD18)
F2	Dipped beam, right	(CE53)OA52)
F3	Radio, timer, preheating	(AA8)(OA38)
F4	Brake light	(CK10)(OA17)
F5	Reversing light, revers warning alarm, loading/fifth wheel light	(EA9)(OA28)
F6	Interior light, radio, central door lock	(ER16)(ES16)(OA23)
F7	Direction indicator, hazard warning light “ 30”	(CN10)
F8	Direction indicator, instruments “15”	(CN7)
F9	Tachograph clock, instrument, idle switch	(NB4)
F10	Fan relay “15”	(HA6)
F11	Automatic gearbox	(LO25)
F12	Windscreen wiper, windscreen washer	(GA30)
F13	Headlight wiper, headlight washer	(GA16)
F14	Spotlight	(CH5)(CI5)
F15	Preheating, range inhibitor, exhaust pressure governor .	(AA35)
F16	Cigarette lighter, centre storage lamp	(EV8)
F17	Fog lights, front and rear	(CG6)
F18	Fuel injection EDC / Ul	(BL25)(BN24)
F19	Full beam, left	(CE51)
F20	Full beam, right	(CE55)
F21	Bed lamps, 24 V outlet, luggage comp. light, el. bedlock	(ER42)(ES48)
F22	Retarder	(OG12)
F23	Air suspension, bogie lift	(XD6)
F24	Parking ligh truck, left	(CE19)
F25	Full beam, spot light	(CE64)
F26	Parking light, trailer, left	(CE22)
F27	Air dryer	(HK4)
F28	Parking light truck, right, ...	(CE26)
F29	Cruisecontrol, exhaust brake FH16	(BL18)(BN30)
F30	Parking light trailer, right	(CE24)
F31	Diff. lock, power take-off, climate unit	(LG6)
F32	Horn, el. op. mirrors, relay ex. fusebox, ex. equipment	(XD25)
F33	El. window winder, driver’s side ..	(XD10)
F34	El. window winder, passenger’s side	(XD14)
F35	Day running light / DIM-DIP	(CE41)
F36	El. heated mirrors, el. heated seat	(HD6)

Relays on circuit board (32) electrical centre

301	Relay, fog lights“7”	(CG5)
305	Relay, reversing lights“3”	(EA8)
306	Relay, full beams“1”	(CE55)
307	Relay, dipped beams“9”	(CE48)
308	Relay, brake lights“11”	(CK8)
309L	Relay, parking lights“10”	(CE19)
309R	Relay, parking lights“6”	(CE26)
315	Relay, starting switch“5”	(XD3)
343	Relay, fog lights. rear“8”	(CG12)
379	Relay, injection pump“4”	(BL25)(BN22)
3005	Alternator-controlled relay“2”	(AA27)

Cable harness illustration index

1000	Cable harness, instruments	page 53
1006	Cable harness, cab, upper	page 57
1007	Cable harness, cab, lower	page 59
1020	Cable harness, cowl	page 61
1030	Cable harness, engine	page 62
1035	Cable harness, diff. lock	page 66
1037	Cable harness, bogie lift	page 68
1042	Cable harness, tail lights	page 72
1056	Cable harness, air dryer	page 73
1057	Cable harness, chassis	page 74
1059	Cable harness, switch, extra	-
1061	Cable harness, parking heater, cab	-
1062	Cable harness, parking heater, frame	-
1063	Cable harness, trailer connection	page 75
1066	Cable harness, Driver Information System (DIS)	page 76
1071	Cable harness, sesor, axle load limiter	page 71
1072	Cable harness, air suspension	page 79
1074	Cable harness, hydralic bogie lift with axle load limiter	page 82
1077	Cable harness, side marking lamp	page 83
1083	Cable harness, door	page 84
1084	Cable harness, cab, ABS	page 86
1085	Cable harness, trailer connection, ABS	page 87
1086	Cable harness, solenoid valve, ABS	page 88
1087	Cable harness, sensor, chassis, ABS	page 88
1096	Cable harness, increasing of drive axle load, “ airdump”	page 89
1407	Cable harness, EDC/cab	page 91
1408	Cable harness, EDC/engine	page 92
1412	Cable harness, Geartronic - gearbox	page 97
1413	Cable harness, Geartronic - cab	page 94
1420	Cable harness speed warning - roof lamps	page 95
1422	Cable harness, Geartronic - chassis	page 96
1425	Cable harness, pulse sensor - tachograph	-
1454	Cable harness, cab tilt pump	page 98
1468	Cable harness, water separator	page 100
1469	Cable harness, fuel filter heater	page 101

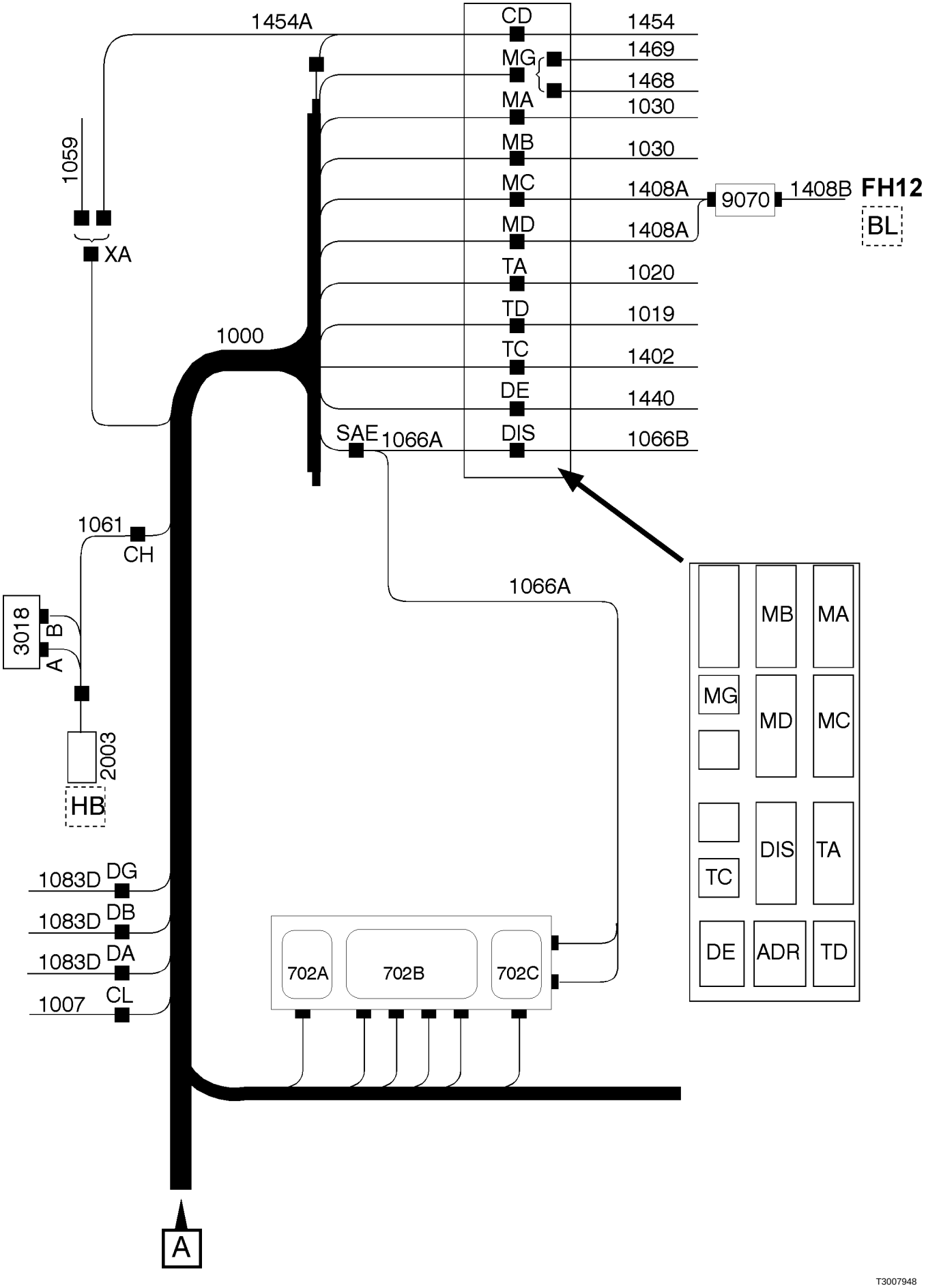
1454A
CD
1454
MG
1469
1468
MA
1030
MB
1030
MC
1408A
9070
1408B
FH12
BL
MD
1408A
TA
1020
TD
1019
TC
1402
DE
1440
SAE
1066A
DIS
1066B
1059
XA
1000
1061
CH
1066A
3018
B
A
2003
HB
1083D DG
1083D DB
1083D DA
1007 CL
702A
702B
702C
MB
MA
MG
MD
MC
DIS
TA
TC
DE
ADR
TD
A
T3007948

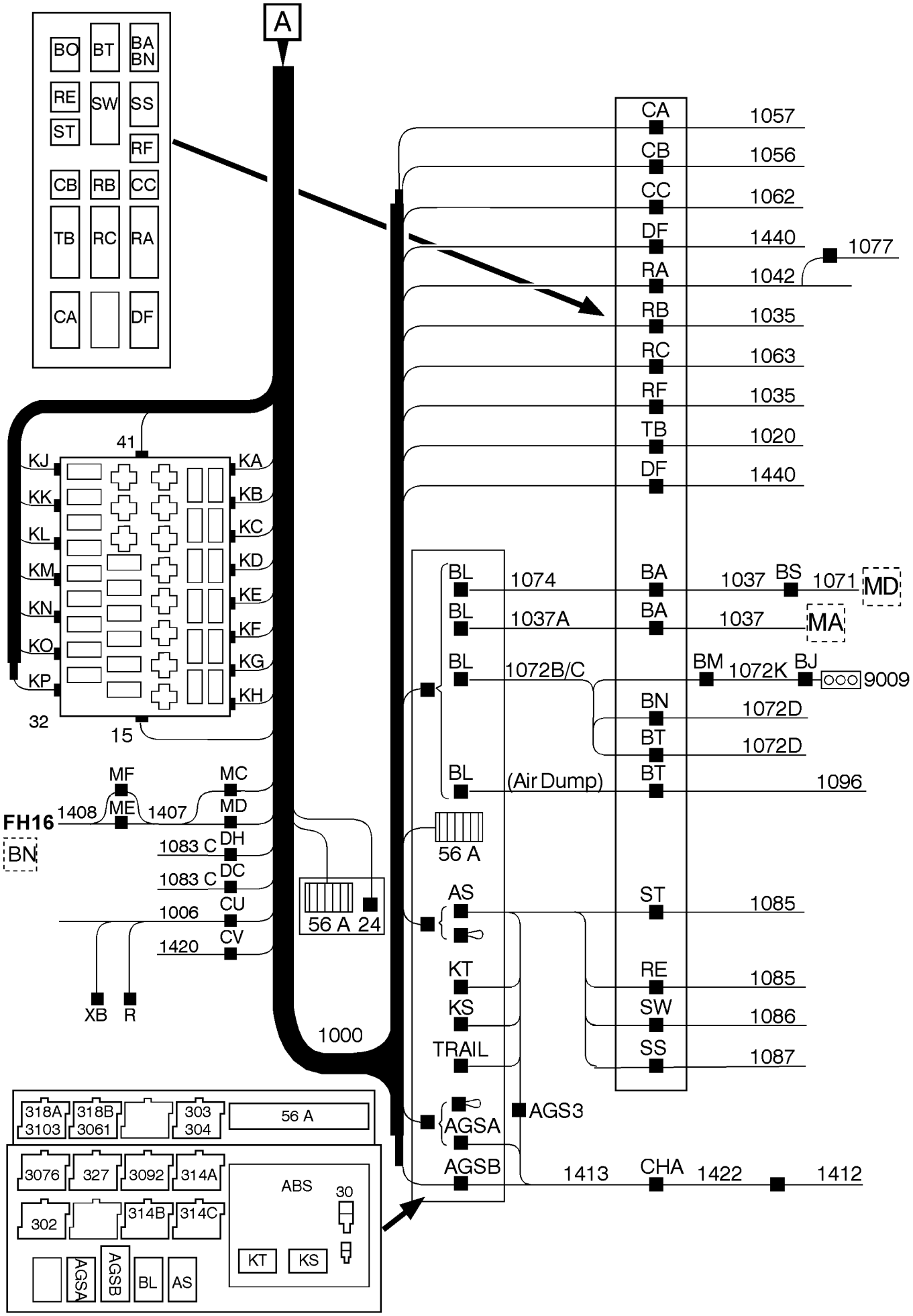
A
BO
BT
BA BN
RE
SW
SS
ST
RF
CB
RB
CC
TB
RC
RA
CA
DF
41
KJ
KK
KL
KM
KN
KO
KP
KA
KB
KC
KD
KE
KF
KG
KH
32
15
MF
MC
FH16
1408
ME
1407
MD
BN
1083 C
DH
1083 C
DC
1006
CU
1420
CV
XB
R
56 A
24
1000
CA
CB
CC
DF
RA
RB
RC
RF
TB
DF
1057
1056
1062
1440
1042
1077
1035
1063
1035
1020
1440
BL
1074
BA
1037
BS
1071
MD
BL
1037A
BA
1037
MA
BL
1072B/C
BM
1072K
BJ
9009
BN
1072D
BT
1072D
BL
(Air Dump)
BT
1096
56 A
AS
ST
1085
KT
RE
1085
KS
SW
1086
TRAIL
SS
1087
AGSA
AGS3
AGSB
1413
CHA
1422
1412
318A 3103
318B 3061
303 304
56 A
3076
327
3092
314A
ABS
30
302
314B
314C
KT
KS
AGSA
AGSB
BL
AS
T3008016

List of connectors

ADR2	(NB12)	BJ4	(MX9)	BM7	(MN8)
AGS A3	(NB24)	BJ4	(MY9)	BM7	(MP8)
AGS A6	(NB24)	BJ6	(MN7)	BM7	(MQ8)
AGS C1	(NB27)	BJ6	(MQ7)	BM7	(MR8)
AGS C2	(NB26)	BJ6	(MR7)	BM7	(MS8)
AGS3:1	(OA58)	BJ6	(MS7)	BM7	(MX8)
AGS3:2	(OA56)	BJ6	(MX7)	BM7	(MY8)
AGSA1	(NB40)	BJ6	(MY7)	BM8	(MN6)
AGSA2	(BL38)	BJ7	(MN8)	BM8	(MP6)
AGSA4	(BL40)	BJ7	(MQ8)	BM8	(MQ6)
AGSA5	(OA62)	BJ7	(MR8)	BM8	(MR6)
AGSA7	(AA12)	BJ7	(MS8)	BM8	(MS6)
AGSA8	(AA12)	BJ7	(MX8)	BM8	(MX6)
AGSB4	(LO21)	BJ7	(MY8)	BM8	(MY6)
AGSB5	(LO18)	BJ8	(MN6)	BN2	(MN18)
AGSB5	(ZB8)	BJ8	(MQ6)	BN2	(MP17)
AGSB6	(LO25)	BJ8	(MR6)	BN2	(MQ17)
AGSB7	(LO60)	BJ8	(MS6)	BN2	(MR17)
AGSB8	(LO62)	BJ8	(MX6)	BN2	(MS17)
AGSB9	(LO4)	BJ8	(MY6)	BN2	(MX18)
AGSB10	(LO2)	BK1	(NB25)	BN2	(MY18)
AGSB11	(LO5)	BK2	(NB24)	BN3	(MN19)
AGSB12	(LO11)	BK3	(CK11)	BN3	(MP18)
AGSB13	(AA44)	BL1	(NC3)	BN3	(MQ18)
AGSB14	(BL51)	BL1	(NJ2)	BN3	(MR18)
AS1	(CK15)	BL1	(ZB23)	BN3	(MS18)
AS2	(NB50)	BL2	(XD6)	BN3	(MX19)
AS3	(NB52)	BL3	(XD18)	BN3	(MY19)
AS4	(NB53)	BL4	(NB28)	BN4	(MN23)
AS5	(CK18)	BL5	(NC26)	BN4	(MP23)
AS6	(XA11)	BL5	(NJ17)	BN4	(MQ21)
AS7	(OA61)	BL6	(NC7)	BN4	(MR21)
AS8	(CL2)	BL6	(NJ5)	BN4	(MS21)
AS8	(ZB19)	BL7	(NC13)	BN4	(MX23)
B	(LO28)	BL7	(NJ3)	BN4	(MY23)
B1	(HP15)	BL8	(MA9)	BN5	(MN24)
B2	(HP16)	BL8	(MD12)	BN5	(MP24)
BA1	(MA16)	BL8	(ZB27)	BN5	(MQ22)
BA1	(MD11)	BM1	(MN2)	BN5	(MR22)
BA2	(MA17)	BM1	(MP2)	BN5	(MS22)
BA2	(MD27)	BM1	(MQ2)	BN5	(MX24)
BA3	(MA5)	BM1	(MR2)	BN5	(MY24)
BA3	(MD5)	BM1	(MS2)	BN6	(MN12)
BA5	(MD9)	BM1	(MX2)	BN6	(MP12)
BA6	(MA22)	BM1	(MY2)	BN6	(MQ12)
BA6	(MD32)	BM3	(MN4)	BN6	(MR12)
BA7	(MA23)	BM3	(MP4)	BN6	(MS12)
BA7	(MD33)	BM3	(MQ4)	BN6	(MX12)
BA8	(MD12)	BM3	(MR4)	BN6	(MY12)
BA8	(ZD32)	BM3	(MS4)	BN7	(MN13)
BJ1	(MN2)	BM3	(MX4)	BN7	(MP13)
BJ1	(MQ2)	BM3	(MY4)	BN7	(MQ13)
BJ1	(MR2)	BM4	(MN9)	BN7	(MR13)
BJ1	(MS2)	BM4	(MP9)	BN7	(MS13)
BJ1	(MX2)	BM4	(MQ9)	BN7	(MX13)
BJ1	(MY2)	BM4	(MR9)	BN7	(MY13)
BJ3	(MN4)	BM4	(MS9)	BN8	(MN18)
BJ3	(MQ4)	BM4	(MX9)	BN8	(MP34)
BJ3	(MR4)	BM4	(MY9)	BN8	(MQ32)
BJ3	(MS4)	BM6	(MN7)	BN8	(MR27)
BJ3	(MX4)	BM6	(MP7)	BN8	(MS29)
BJ3	(MY4)	BM6	(MQ7)	BN8	(MX18)
BJ4	(MN9)	BM6	(MR7)	BN8	(MY18)
BJ4	(MQ9)	BM6	(MS7)	BN8	(ZB34)
BJ4	(MR9)	BM6	(MX7)	BS1	(MD11)
BJ4	(MS9)	BM6	(MY7)	BS1	(MN24)

BS1	(MP24)	BT8	(MV18)	COM8	(BN60)
BS1	(MQ22)	BT8	(MW17)	COM8	(ZB2)
BS1	(MR22)	BX1	(MX29)	CP1	(HB19)
BS1	(MS22)	BX2	(MX34)	CP2	(HB21)
BS1	(MX24)	BX2	(MY39)	CP4	(HB21)
BS1	(MY24)	BX3	(MX32)	CR1	(HB5)
BS2	(MD9)	CA1	(LE20)	CR2	(HB8)
BS2	(MN23)	CA2	(CK3)	CR3	(HB9)
BS2	(MP23)	CA3	(LG7)	CR6	(HB12)
BS2	(MQ21)	CA4	(LD8)	CR7	(HB6)
BS2	(MR21)	CA4	(LE10)	CU1	(CE9)
BS2	(MS21)	CA5	(CK8)	CU2	(CE37)
BS2	(MX23)	CA6	(NC16)	CU3	(ER13)
BS2	(MY23)	CA6	(NJ11)	CU3	(ES13)
BS4	(MD12)	CA7	(NC27)	CU4	(ER38)
BS4	(MN23)	CA7	(NJ19)	CU4	(ES48)
BS4	(MP23)	CA8	(ZA50)	CU5	(JA10)
BS4	(MQ21)	CB1	(HK4)	CU6	(ER23)
BS4	(MR21)	CB2	(HK4)	CU6	(ES20)
BS4	(MS21)	CB2	(ZB37)	CU7	(KB3)
BS4	(MX23)	CC1	(HB2)	CU8	(ER12)
BS4	(MY23)	CC2	(HB5)	CU8	(ES13)
BS4	(ZB32)	CD2	(HP5)	CU9	(XA6)
BS4	(ZB36)	CH1	(HB24)	CU10	(XA8)
BT1	(MW20)	CH2	(HB2)	CU11	(CE61)
BT2	(MP34)	CH3	(HB5)	CU12	(ER22)
BT2	(MQ32)	CH5	(HB23)	CU12	(ES20)
BT2	(MR34)	CH6	(HB23)	CU13	(JA20)
BT2	(MS34)	CH9	(HB29)	CU13	(JA35)
BT2	(MW24)	CH9	(ZB40)	CU14	(JA20)
BT2	(MX28)	CHA1	(LO14)	CU14	(JA36)
BT2	(MY27)	CHA2	(LO15)	CU15	(JA22)
BT3	(MP35)	CHA2	(ZB7)	CU15	(JA38)
BT3	(MQ33)	CHA3	(LO11)	CU16	(JA23)
BT3	(MR27)	CHA4	(LO13)	CU16	(JA39)
BT3	(MS29)	CHA4	(ZB8)	DA1	(ZA42)
BT3	(MV5)	CHA5	(LO63)	DA2	(JA17)
BT3	(MW29)	CHA6	(LO5)	DA2	(JA39)
BT3	(MX29)	CHA7	(LO8)	DA3	(JA16)
BT3	(MY28)	CHA8	(LO7)	DA3	(JA38)
BT4	(MP40)	CHA9	(LO11)	DA4	(ER18)
BT4	(MQ41)	CHA10	(LO10)	DA4	(ES4)
BT4	(MR40)	CL1	(ER14)	DA5	(ER19)
BT4	(MS38)	CL1	(ES14)	DA5	(ES4)
BT4	(MV6)	CL2	(ER4)	DA6	(KA7)
BT4	(MW26)	CL2	(ES4)	DA7	(KA5)
BT4	(MX42)	CL3	(ER18)	DA8	(XD10)
BT4	(MY35)	CL3	(ES18)	DB1	(ZA39)
BT5	(MP45)	CL5	(HD6)	DB2	(XD31)
BT5	(MQ37)	CL6	(NB35)	DB3	(KH5)
BT5	(MR45)	CL7	(ED6)	DB4	(KH8)
BT5	(MS44)	CL8	(EX10)	DB5	(KH9)
BT5	(MV10)	CL9	(HD18)	DB6	(KG7)
BT5	(MW8)	CL10	(HD23)	DB7	(KG9)
BT6	(MP37)	CL11	(ER49)	DB8	(XD14)
BT6	(MQ38)	CL11	(ES55)	DC1	(ZB51)
BT6	(MR37)	CL12	(NO11)	DC2	(JA14)
BT6	(MS36)	CL13	(EX13)	DC2	(JA36)
BT6	(MV15)	CL14	(EX12)	DC3	(JA13)
BT6	(MW13)	CL14	(ZA63)	DC3	(JA35)
BT6	(MX39)	CL15	(ZB19)	DC4	(ER4)
BT6	(MY32)	CL16	(EX10)	DC4	(ES18)
BT7	(MP36)	CL16	(ZB22)	DC5	(ER4)
BT7	(MQ49)	COM1	(BN30)	DC5	(ES19)
BT7	(MR36)	COM4	(BN27)	DC6	(KA7)
BT7	(MV17)	COM5	(BN57)	DC7	(KA4)
BT7	(MW15)	COM6	(BN45)	DE1	(HG8)
BT8	(MQ46)	COM7	(BN65)	DE1	(ZA19)

DE2	(HG8)	F29	(BN30)	JC6	(ZB15)
DE3	(HH10)	F30	(CE24)	JC7	(AA18)
DE4	(HH11)	F31	(LG6)	JC8	(KE7)
DE5	(HH13)	F32	(XD25)	JC9	(EX4)
DF1	(HG4)	F33	(XD10)	JC10	(OG24)
DF1	(ZB35)	F34	(XD14)	JC11	(OG23)
DF2	(HG4)	F35	(CE41)	JC12	(OG30)
DF3	(HH3)	F36	(HD6)	JV1	(HM14)
DF4	(HH4)	FZ1	(CE56)	JV1	(ZB3)
DF5	(HH7)	FZ2	(CE61)	JV3	(HM11)
DG1	(HH10)	FZ3	(CI6)	JV6	(NO10)
DG2	(HH11)	FZ4	(CH6)	JV6	(ZB15)
DG3	(HH13)	FZ4	(CI9)	JV7	(AA18)
DG4	(HH3)	FZ5	(CI11)	JV8	(KE7)
DG5	(HH4)	FZ6	(CH14)	JV9	(EX4)
DG6	(HH7)	FZ6	(CI14)	JV10	(OG24)
DH3	(KG8)	FZ6	(ZB10)	JV11	(OG23)
DH3	(KH13)	FZ7	(CH5)	JV12	(OG30)
DH4	(KG12)	FZ7	(CI5)	KA1	(EA9)
DH4	(KH17)	FZ8	(CH14)	KA2	(CE19)
DH5	(KG13)	FZ8	(CI14)	KA3	(CK10)
DH5	(KH18)	HR	(LO30)	KA4	(CE26)
DH8	(XD17)	HS	(LO33)	KA5	(CE24)
DIS1	(NJ45)	IC2	(PA14)	KA6	(CE22)
DIS2	(NJ29)	IC2	(ZB8)	KA7	(CE25)
DIS3	(NJ33)	IC3	(HA11)	KA8	(CE21)
DIS4	(NJ36)	IC3	(ZB6)	KB1	(CN7)
DIS15	(NJ59)	IC4	(KG14)	KB2	(CN17)
E1	(HP17)	IC4	(KH19)	KB3	(CN10)
F1	(CE49)	IC4	(ZB5)	KB4	(CN17)
F1	(OA45)	IC5	(XD31)	KB5	(CE9)
F2	(CE53)	IC5	(XD32)	KB6	(CE37)
F2	(OA52)	IC6	(HD26)	KB7	(ER13)
F3	(AA8)	IC6	(ZB2)	KB7	(ES13)
F3	(OA38)	IC7	(LD10)	KB8	(ER38)
F4	(CK10)	IC7	(LE12)	KB8	(ES48)
F4	(OA17)	IC8	(LD10)	KC1	(GA30)
F5	(EA9)	IC8	(LE12)	KC2	(GA23)
F5	(OA28)	IC8	(ZB13)	KC6	(GA25)
F6	(ER16)	IC9	(AA50)	KC7	(GA16)
F6	(ES16)	IC10	(NB37)	KC8	(NB46)
F6	(OA23)	IC14	(EA17)	KD1	(AA27)
F7	(CN10)	IC15	(EA17)	KD1	(ZB45)
F8	(CN7)	IC15	(ZB8)	KD2	(LD7)
F9	(NB4)	IV2	(PA14)	KD2	(LE9)
F10	(HA5)	IV2	(ZB8)	KD5	(AA35)
F11	(LO25)	IV3	(HA11)	KD7	(CH5)
F12	(GA30)	IV3	(ZB6)	KD7	(CI5)
F13	(GA16)	IV4	(KG14)	KD8	(CE64)
F14	(CH5)	IV4	(KH19)	KE1	(AA24)
F14	(CI5)	IV4	(ZB5)	KE2	(AA20)
F15	(AA35)	IV5	(XD31)	KE3	(AA19)
F16	(EV8)	IV5	(XD32)	KE4	(BN61)
F17	(CG6)	IV6	(HD26)	KE5	(EA4)
F18	(BL25)	IV6	(ZB2)	KE6	(CK8)
F18	(BN24)	IV7	(LD10)	KE7	(EV8)
F19	(CE51)	IV7	(LE12)	KE8	(XD25)
F20	(CE55)	IV8	(LD10)	KF1	(CG6)
F21	(ER38)	IV8	(LE12)	KF2	(CG12)
F21	(ES48)	IV8	(ZB13)	KF3	(CG5)
F22	(OG12)	IV12	(AA38)	KF4	(CG13)
F23	(XD6)	IV14	(EA17)	KF5	(CG8)
F24	(CE19)	IV15	(EA17)	KF6	(CG15)
F25	(CE64)	IV15	(ZB8)	KG2	(CE37)
F26	(CE22)	JCI	(HM14)	KG3	(CE38)
F27	(HK4)	JCI	(ZB3)	KG4	(CE43)
F28	(CE26)	JC3	(HM11)	KG5	(CE37)
F29	(BL18)	JC6	(NO10)	KG6	(ER23)

KG6	(ES23)	KS7	(OA28)	MC4	(BN60)
KG7	(EA13)	KS8	(OA32)	MC5	(BL46)
KG8	(ER16)	KT1	(OA45)	MC5	(BN58)
KG8	(ES16)	KT2	(OA44)	MC6	(BL41)
KH1	(OG12)	KT3	(OA54)	MC6	(BN55)
KH2	(XA17)	KT4	(OA52)	MC7	(BL52)
KH3	(XA15)	KT5	(OA51)	MC8	(BL50)
KH4	(LG6)	KT6	(OA38)	MC8	(BN61)
KH5	(HA10)	KT7	(OA34)	MC9	(BL34)
KH6	(HA12)	KT8	(OA15)	MC9	(BN52)
KH7	(OG15)	L1	(NJ59)	MC10	(BL37)
KH8	(XD6)	L2	(NG7)	MC10	(BN54)
KJ1	(CE14)	L3	(NG8)	MC11	(BL38)
KJ2	(CE49)	L4	(NG10)	MC12	(BL31)
KJ3	(FA7)	L5	(NG11)	MC13	(BL40)
KJ5	(CE51)	L6	(NG13)	MC14	(BL43)
KJ6	(CE53)	L7	(NG15)	MC15	(BL44)
KJ7	(CE55)	L8	(NG19)	MC16	(BL56)
KJ8	(CE32)	L9	(NJ54)	MC16	(BN61)
KK1	(PA7)	L10	(NG18)	MC16	(ZA7)
KK2	(CE64)	L11	(NJ51)	MC16	(ZB2)
KK3	(CE64)	L13	(NG22)	MD1	(BL4)
KK4	(CE56)	L14	(NG24)	MD1	(BN37)
KK5	(CE50)	L15	(NG22)	MD2	(BL5)
KK6	(HD6)	MA1	(AA46)	MD2	(BN38)
KK7	(AA8)	MA2	(NB31)	MD3	(BL7)
KK8	(AA17)	MA4	(NB34)	MD3	(BN40)
KL1	(CK12)	MA5	(NA17)	MD4	(BL12)
KL2	(HA8)	MA5	(NG28)	MD4	(BN46)
KL3	(HA5)	MA6	(NA20)	MD5	(BL13)
KL4	(HK4)	MA6	(NJ51)	MD5	(BN48)
KL6	(AA7)	MA7 / MS1	(NB19)	MD6	(BL14)
KL7	(NB4)	MA8 / MS2	(NB20)	MD7	(BL11)
KM3	(LO21)	MA9 / MS3	(NB21)	MD7	(BN47)
KM4	(LO25)	MA10 / MS4	(NB22)	MD8	(BL18)
KN1	(CE37)	MA13	(AA24)	MD9	(BL21)
KN2	(CE41)	MA14	(EA4)	MD9	(BN35)
KN3	(CE57)	MA15	(BL58)	MD12	(BN63)
KN4	(CE47)	MA15	(BN5)	MD14	(BN65)
KN5	(CE27)	MA16	(BL60)	ME1	(BN26)
KN6	(CE44)	MA16	(BN10)	ME2	(BN27)
KN7	(CE37)	MB1	(AA19)	ME3	(BN28)
KN8	(CE45)	MB2	(AA40)	ME4	(BN60)
KN8	(ZB46)	MB3	(AA38)	ME5	(BN58)
KO1	(BL18)	MB4	(AA41)	ME6	(BN55)
KO1	(BN30)	MB5	(HA17)	ME8	(BN61)
KO3	(BL50)	MB6	(AA35)	ME9	(BN52)
KO4	(BL20)	MB7	(AA12)	ME10	(BN54)
KO4	(BN27)	MB8	(NA23)	ME16	(BN61)
KO5	(BL25)	MB8	(NG22)	ME16	(ZB2)
KO5	(BN24)	MB9	(AA46)	MF1	(BN37)
KO6	(AA22)	MB10	(NB32)	MF2	(BN38)
KO7	(BL27)	MB11	(AA41)	MF3	(BN40)
KO7	(BN22)	MB11	(ZB41)	MF4	(BN46)
KO8	(AA19)	MB12	(BL62)	MF5	(BN48)
KP1	(XD10)	MB13	(BL61)	MF7	(BN47)
KP2	(XD14)	MB14	(BL58)	MF9	(BN35)
KP3	(HD12)	MB14	(BN10)	MF12	(BN63)
KP4	(CE32)	MB15	(BL60)	MF14	(BN65)
KP5	(ER26)	MB15	(BN5)	MF16	(BN39)
KP5	(ES26)	MB16	(ZB54)	MG1	(HM14)
KS1	(OA7)	MC1	(BL25)	MG1	(HM22)
KS2	(OA10)	MC1	(BN25)	MG2	(HM14)
KS3	(OA28)	MC2	(BL49)	MG2	(ZB3)
KS4	(OA14)	MC2	(BN27)	NF1	(NB15)
KS5	(OA31)	MC3	(BL27)	NF1	(ZA5)
KS6	(OA26)	MC3	(BN28)	NF2	(NB15)
KS6	(ZB53)	MC4	(BL47)	NF2	(ZA5)

RA1	(CE19)
RA1	(CE26)
RA1	(ZA24)
RA2	(CE19)
RA3	(CN14)
RA4	(CK10)
RA5	(CN15)
RA6	(CE26)
RA7	(EA9)
RA8	(CG13)
RA9	(EA14)
RA10	(EA14)
RB1	(LG18)
RB2	(LG18)
RB2	(ZA47)
RC1	(CE43)
RC1	(ZA14)
RC2	(CE22)
RC3	(CN5)
RC4	(CK18)
RC5	(CN7)
RC6	(CE24)
RC7	(EA22)
RC8	(CG19)
RC9	(CG21)
RC10	(CK15)
RC11	(CN12)
RC12	(CN17)
RC13	(OA6)
RC14	(XA6)
RC15	(XA23)
RC16	(XA10)
RE1	(OA15)
RE2	(OA12)
RE2	(ZB54)
RE3	(OA3)
RF1	(LG5)
RF2	(LG5)
RF2	(ZA45)
ROK	(LO31)
SAE1	(BL32)
SAE1	(BN13)
SAE2	(BL33)
SAE2	(BN14)
SAE3	(NJ48)
SAE4	(NJ57)
SAE5	(NJ43)
SAE6	(NJ44)
SAE7	(NJ26)
SS1	(OA34)
SS2	(OA35)
SS3	(OA41)
SS4	(OA42)
SS5	(OA48)
SS6	(OA49)
SS7	(OA55)
SS8	(OA56)
ST1	(OA21)
ST1	(ZB51)
ST2	(OA23)
SW1	(OA38)
SW1	(ZB56)
SW2	(OA37)
SW3	(OA38)
SW4	(OA45)
SW4	(ZB58)
SW5	(OA44)
SW6	(OA45)
SW7	(OA52)
SW7	(ZB60)
SW8	(OA51)
SW9	(OA52)
SW10	(OA59)
SW10	(ZB62)
SW11	(OA58)
SW12	(OA59)
T1	(BN36)
T2	(BN43)
T3	(BN42)
T4	(BN37)
T5	(BN28)
T6	(BN64)
T7	(BN42)
T8	(BN30)
TA1	(CE50)
TA1	(ZB30)
TA2	(CE51)
TA3	(CE49)
TA4	(GA16)
TA5	(GA15)
TA6	(CH5)
TA6	(CI5)
TA7	(CN9)
TA8	(CE14)
TA9	(CG6)
TA10	(FA7)
TA11	(FA7)
TA13	(NC24)
TA13	(NJ22)
TA14	(PA4)
TA15	(PA5)
TA16	(PA7)
TB1	(CE54)
TB1	(ZA12)
TB2	(CE55)
TB3	(CE53)
TB4	(GA21)
TB5	(GA19)
TB6	(CH6)
TB6	(CI6)
TB7	(CN10)
TB8	(CE32)
TB9	(CG8)
TB10	(FA3)
TB11	(FA3)
TB14	(PA10)
TB15	(PA11)
TB16	(PA13)
TC1	(GA5)
TC2	(GA3)
TC3	(GA9)
TC4	(GA5)
TC4	(ZB47)
TD3	(GA32)
TD3	(ZB33)
TD5	(GA31)
TD6	(GA33)
TD7	(GA29)
TD8	(GA30)
TRAIL	(OA23)
VR1	(OG4)
VR2	(OG5)
VR3	(OG3)
VR4	(OG6)
VR5	(OG7)
VR6	(OG8)
VR8	(OG11)
VR9	(OG24)
VR10	(OG23)
VR11	(OG12)
VR12	(OG21)
VR13	(OG9)
VR14	(OG20)
VR14	(ZB14)
VR15	(OG22)
XA1	(HP11)
XA1	(HP4)
XA1	(MV12)
XA1	(MV3)
XA1	(MW10)
XA1	(MW2)
XA1	(XD28)
XA2	(HP10)
XA2	(HP5)
XA2	(MV10)
XA2	(MV4)
XA2	(MW4)
XA2	(MV9)
XA2	(XD31)
XA3	(HP7)
XA3	(HP8)
XA3	(MV17)
XA3	(MV6)
XA3	(MW15)
XA3	(MW5)
XA3	(XD34)
XA3	(ZB43)
XB1	(XA6)
XB2	(XA8)
XB3	(CE61)
XB4	(XA8)
XB4	(ZA23)

List of components

24: 1	Connector, socket/diagnostics (OG14)
24: 2	Connector, socket/diagnostics (OG15)
24: 3	Connector, socket/diagnostics (OG16)
24: 4	Connector, socket/diagnostics (OG18)
24: 5	Connector, socket/diagnostics (KE13)
24: 6	Connector, socket/diagnostics (KE10)
24: 8	Connector, socket/diagnostics (OG17)
30 A	Battery (AA6)
30 B	Battery (AA6)
34	Connector (AA4)
36	Connector, tail lamp junction box (CE22)
36	Connector, tail lamp junction box (CE24)
36	Connector, tail lamp junction box (CE41)
36	Connector, tail lamp junction box (CG19)
36	Connector, tail lamp junction box (CG21)
36	Connector, tail lamp junction box (CK15)
36	Connector, tail lamp junction box (CK18)
36	Connector, tail lamp junction box (CN12)
36	Connector, tail lamp junction box (CN17)
36	Connector, tail lamp junction box (CN5)
36	Connector, tail lamp junction box (CN7)
36	Connector, tail lamp junction box (EA22)
36	Connector, tail lamp junction box (OA6)
36	Connector, tail lamp junction box (XA10)
36	Connector, tail lamp junction box (XA23)
36	Connector, tail lamp junction box (XA6)
41	+”30” terminal, electrical centre (AA4)
44	Circuit card, gear lever carrier, Geartronic (LO36)
56 A	Fuse holder, 6–unit (XA19)
56 X	Fuse holder, 6–unit (XA7)
77	Plug socket, 7-unit (CE22)
77	Plug socket, 7–unit (CE24)
77	Plug socket, 7–unit (CE41)
77	Plug socket, 7–unit (CG21)
77	Plug socket, 7–unit (CK18)
77	Plug socket, 7–unit (CN5)
77	Plug socket, 7–unit (CN7)
78	Extra plug socket, 7–unit (CE39)
78	Extra plug socket, 7–unit (CG19)
78	Extra plug socket, 7–unit (EA22)
78	Extra plug socket, 7–unit (OA6)
78	Extra plug socket, 7–unit (XA10)
78	Extra plug socket, 7–unit (XA23)
78	Extra plug socket, 7–unit (XA6)
79	Plug socket, ABS (OA12)
79	Plug socket, ABS (OA15)
79	Plug socket, ABS (OA21)
79	Plug socket, ABS (OA23)
79	Plug socket, ABS (OA3)
100	Switch, headlights (CE36)
101	Switch, full beams and dipped beams (CE61)
102	Switch, fog lights (CG21)
103	Switch, spot lights (CH10)
103	Switch, spot lights (CI10)
104	Switch, loading lights (ED9)
109	Switch, hazard warning lights (CN17)
111 D1	Switch, window winder (KA12)
111 DP	Switch, window winder (KA6)
111 P	Switch, window winder (KA4)
112	Switch, air conditioning (HA20)
112 ATC	Switch, air conditioning (HA10)
116 A	Switch, interior light (ES29)
116 B	Switch, interior light (ER31)
116 B	Switch, interior light (ES39)
118	Switch, fan (HA15)
119	Switch, windscreen wiper (GA25)
123	Switch, heated rearview mirror (HG12)
125	Switch, exhaust brake (BL58)
125	Switch, exhaust brake (BN8)
126	Switch, diff. lock wheels, rear (LG14)
127	Switch, diff. lock inter axles (LG6)
132	Switch, roof sign light (EJ4)
132	Switch, roof sign light (EK4)
133	Switch, bogie lift (MA5)
133	Switch, bogie lift (MD4)
133	Switch, bogie lift (MP44)
133	Switch, bogie lift (MQ46)
133	Switch, bogie lift (MR44)
133	Switch, bogie lift (MS42)
133	Switch, bogie lift (MX45)
133	Switch, bogie lift (MY39)
144	Switch, battery master switch (AA3)
147	Switch, direction indicators (CN7)
149	Switch, horn (FA6)
150	Switch, starting switch (AA11)
157	Switch, air horn (FA10)
176	Switch, SPLIT (LO56)
1105	Switch, levelling control, headlights (PA10)
1107	Switch, door lock (KG8)
1111	Switch, roof hatch (KB11)
1122	Switch, retarder (OG4)
1123	Switch, air evacuation (MQ54)
1123	Switch, air evacuation (MV10)
1123	Switch, air evacuation (MW8)
1132 D	Switch, el. operated rearview mirror (HH10)
1132 P	Switch, el. operated rearview mirror (HH4)
1134	Switch, reverse warner (EA15)
1135	Switch, cruise control (BL14)
1135	Switch, cruise control (BN49)
1142	Switch, engine diagnostics (NA19)
1142	Switch, engine diagnostics (NG18)
1146	Switch, snooze function/radio (JA18)
1147	Switch, cab tilt pump (HP5)
1147B	Switch, cab tilt pump (HP17)
1148	Switch, storage compartment lighting (EV4)
1149	Switch, PTO (LD7)
1149 1	Switch, PTO (LE9)
1149 2	Switch, PTO (LE19)
1150	Switch, fuel filter heater (HM7)
200	Break contact, warning light, parking brake (NB39)
205 L	Break contact, interior light (ER4)
205 L	Break contact, interior light (ES4)
205 R	Break contact, interior light (ER17)
205 R	Break contact, interior light (ES17)
207	Closing contact, indicator light, diff. lock, rear wheels (LG18)
207 R	Closing contact, indicator light, diff. lock, rear wheels (LG14)
211	Closing contact, indicator light, bogie lift (MA16)
211	Closing contact, indicator light, bogie lift (MD27)
214	Closing contact, indicator light, splitter (NB31)
216 A	Closing contact, brake lights (CK8)
216 B	Closing contact, brake lights (CK3)
216 C	Closing contact, brake lights (CK3)
217	Closing contact, reversing lights (EA4)
218	Break contact, exh-pressure governor (AA45)
219	Closing contact, indicator light, air cleaner (NB33)
223	Slip contact, horn (FA7)
228 L	Closing contact, cab lock (NB35)
228 R	Closing contact, cab lock (NB37)
238	Closing contact, thermal (BN64)
239	Break contact, thermal (BL62)

258	Break contact, thermal, bogie lift (MA22)
258	Break contact, thermal, bogie lift (MD32)
2003	Thermostat, parking heater (HB5)
2004 L	Break contact, lighting luggage compartment (ER48)
2004 L	Break contact, lighting luggage compartment (ES54)
2007	Break contact, clutch pedal (BL18)
2007	Break contact, clutch pedal (BN25)
2008	Break contact, brake pedal (BL21)
2008	Break contact, brake pedal (BN35)
2018	Contact, oil pressure, power steering (NC24)
2018	Contact, oil pressure, power steering (NJ18)
2019 R	Contact, lock, seat belt (NO11)
2020 L	Contact, bunk lock (ES61)
2020 R	Contact, bunk lock (ES59)
2062	Closing contact, air evacuation (MV5)
2062	Closing contact, air evacuation (MW29)
2067	Closing contact, indicator lamp/air pressure (LO11)
2071	Contact, low coolant level (NB48)
301	Relay, fog lights (CG5)
302	Relay, spot lights (CH5)
302	Relay, spot lights (CI5)
303	Relay, loading lights (ED6)
305	Relay, reversing lights (EA8)
306	Relay, full beams (CE55)
307	Relay, dipped beams (CE48)
308	Relay, brake lights (CK8)
308 B	Relay, brake lights (CL4)
308 B	Relay, brake lights (OA7)
308 RET	Relay, brake lights (OG30)
309 L	Relay, parking lights (CE19)
309 R	Relay, parking lights (CE26)
312	Relay, starting heater (AA35)
313	Relay, bogie lift motor (MA23)
313	Relay, bogie lift motor (MD33)
314 A	Relay, bogie lift (MP25)
314 A	Relay, bogie lift (MR25)
314 A	Relay, bogie lift (MS27)
314 A	Relay, bogie lift (MX32)
314A	Relay, bogie lift (MQ23)
314 B	Relay, bogie lift (MP34)
314 B	Relay, bogie lift (MQ32)
314 B	Relay, bogie lift (MR34)
314 C	Relay, bogie lift (MP43)
314 C	Relay, bogie lift (MQ46)
314 C	Relay, bogie lift (MR43)
314 D	Relay, bogie lift (MD9)
314 D	Relay, bogie lift (MQ54)
314 D	Relay, bogie lift (MY38)
314D	Relay, bogie lift (MV8)
314D	Relay, bogie lift (MW6)
314 E	Relay, bogie lift (MQ60)
314E	Relay, bogie lift (MW23)
315	Relay, starting switch (XD3)
317	Relay, headlamp wiper (GA16)
318 A	Relay, exh. pressure governor (BN4)
318 B	Relay, exh. pressure governor (BN4)
318 C	Relay, exh. pressure governor (CL15)
323	Relay, flasher unit (CN3)
324	Relay, range inhibitor (AA52)
326 X	Relay, extra fuse holder (XA3)
327	Relay, heated rearview mirror (HG4)
343	Relay, fog lights, rear (CG12)
345	Relay, start inhibitor (LO29)
345B	Relay, start inhibitor (LO33)
348A	Relay, fan (HA8)
348B	Relay, fan (HB33)
348C	Relay, fan (HB31)
360	Relay, engage inhibitor, power take-off (LD3)
360	Relay, engage inhibitor, power take-off (LE6)
364	Operating controls, bogie lift (MA15)
364	Operating controls, bogie lift (MD17)
379	Relay, injection pump (BL25)
379	Relay, injection pump (BN22)
3004	Relay, parking heater (HB24)
3005	Alternator-controlled relay (AA27)
3016	Relay, control device, bogie lift with axle-load limiter (MD25)
3017	Time relay, axle-load limiter (MD16)
3017	Time relay, axle-load limiter (MP35)
3017	Time relay, axle-load limiter (MQ36)
3017	Time relay, axle-load limiter (MR35)
3017	Time relay, axle-load limiter (MS34)
3017	Time relay, axle-load limiter (MX37)
3017	Time relay, axle-load limiter (MY30)
3017 B	Time relay, axle-load limiter (MQ60)
3017 B	Time relay, axle-load limiter (MW20)
3017 B	Time relay, axle-load limiter (MY45)
3018	Relay, control unit parking heater (HB6)
3023	Relay, information ABS (CL9)
3024 A	Relay, solenoid control valve, ABS (OA44)
3024 B	Relay, solenoid control valve, ABS (OA51)
3025	Relay, indicator lamp, ABS (OA34)
3048	Relay, dim—dip (CE40)
3060	Relay box, EDC (BN19)
3061	Relay, retarder (BL60)
3061 RET	Relay, retarder (OG36)
3066	Combination relay, several functions (AA35)
3066	Combination relay, several functions (GA26)
3073	Relay, Geartronic 1 (LO25)
3074	Relay, Geartronic 2 (LO21)
3075	Relay, central lock (KG3)
3075	Relay, central lock (KH8)
3076	Relay, adjustable seat (HD18)
3092	Relay, height limiter (MN18)
3092	Relay, height limiter (MP18)
3092	Relay, height limiter (MQ18)
3092	Relay, height limiter (MR18)
3092	Relay, height limiter (MS18)
3092	Relay, height limiter (MX19)
3092	Relay, height limiter (MY19)
3101	Relay, interior lighting (ER12)
3101	Relay, interior lighting (ES13)
3102	Relay, cab tilt pump (HP15)
3103	Relay, fuel filter heater (HM7)
400 L	Bulb, full beams and dipped beams (CE49)
400 R	Bulb, full beams and dipped beams (CE53)
401 L	Bulb, fog lights (CG6)
401L	Bulb, fog lights (ZB30)
401 R	Bulb, fog lights (CG8)
402 L	Bulb, spot lights (CH5)
402 L	Bulb, spot lights (CI5)
402 R	Bulb, spot lights (CH6)
402 R	Bulb, spot lights (CI6)
403/404	Bulb, loading light (ED6)
405 L	Bulb, reversing lights (EA8)
405 R	Bulb, reversing lights (EA9)
408	Bulb, parking light, left front (CE14)
409	Bulb, parking light, right front (CE32)
410	Bulb, brake light, left (CK10)
411	Bulb, brake light, right (CK12)
412	Bulb, tail light, left (CE18)
413	Bulb, tail light, right (CE26)
414	Bulb, side marker light, left, front (CE12)
415	Bulb, side marker light, right, front (CE34)

416	Bulb, side marker light, left, centre (CE17)
417	Bulb, side marker light, right, centre (CE29)
420	Bulb, position light, roof, left (CE37)
421	Bulb, position light, roof, right (CE9)
422	Bulb, dir. indicator, left, front (CN9)
423	Bulb, dir. indicator, right, front (CN10)
426	Bulb, dir. indicator, left, rear (CN14)
427	Bulb, dir. indicator, right, rear (CN15)
429	Bulb, cigarette lighter lighting (EV10)
433 L	Bulb, instep light (ER4)
433 L	Bulb, instep light (ES4)
433 R	Bulb, instep light (ER19)
433 R	Bulb, instep light (ES19)
434 C	Bulb, interior light (ER26)
434 C	Bulb, interior light (ES34)
434 L	Bulb, interior light (ER8)
434 R	Bulb, interior light (ER13)
435 LC	Bulb, bunk light (ES26)
435 LL	Bulb, bunk light (ER35)
435 LL	Bulb, bunk light (ES42)
435 LU	Bulb, bunk light (ES39)
435 RC	Bulb, bunk light (ES30)
435 RL	Bulb, bunk light (ER38)
435 RL	Bulb, bunk light (ES45)
435 RU	Bulb, bunk light (ES48)
437 C	Bulb, identification light, front (CE3)
437 L	Bulb, identification light, front (CE3)
437 R	Bulb, identification light, front (CE3)
440	Bulb, heater control light (XD10)
440	Bulb, heater control light (ZA45)
447	Bulb, ashtray light (EV13)
451	Bulb, rear fog light, left (CG13)
452	Bulb, rear fog light, right (CG15)
468	Fluorescent tube, roof lighting (EJ14)
468 L	Fluorescent tube, roof lighting (EK14)
468 R	Fluorescent tube, roof lighting (EK14)
4057 L	Lighting, storage compartment (ER49)
4057 L	Lighting, storage compartment (ES55)
4064	Bulb, storage tray light (ES22)
4064	Bulb, storage tray light (EV4)
500	Indicator light, dir. indicator, tractor (NB43)
501	Indicator light, dir. indicator, trailer 1 (NB45)
503	Warning light, oil pressure, engine (NA23)
504	Indicator light, full beams (NB42)
505	Warning light, battery charging (NA22)
505	Warning light, battery charging (NJ14)
507	Warning light, service brakes (NC14)
507	Warning light, service brakes (NJ10)
508	Warning light, parking brake (NB40)
510	Indicator light, diff. lock, rear wheels (NB26)
511	Indicator light, diff. lock, inter-axles (NB37)
513	Indicator light, bogie lift (NC7)
513	Indicator light, bogie lift (NJ5)
514	Indicator light, overdrive (NB31)
524	Indicator light, air cleaner (NB33)
528	Indicator light, preheating (NA11)
528	Indicator light, preheating (NG10)
536	Indicator light, rear fog light (NC11)
536	Indicator light, rear fog light (NJ8)
547	Central warning for indicator and warning lights (NB49)
550	Warning light, cab lock (NB36)
554	Indicator light, coolant temperature (NA6)
555	Indicator light, coolant level (NB34)
5008	Indicator lamp, air suspension, manual position (NC26)
5008	Indicator lamp, air suspension, manual position (NJ18)
5009	Indicator lamp, vehicle, ABS (NB51)
5010	Indicator lamp, trailer, ABS (NB52)
5017	Indicator lamp, trailer, ABS information (NB54)
5022	Indicator lamp, retarder (NG20)
5022	Indicator lamp, retarder (NO13)
5032	Warning lamp, seat belt (NO11)
5034	Indicator lamp, washer fluid level (NB39)
5035	Warning lamp, steering servo circuit 2 (pss dual) (NC24)
5035	Warning lamp, steering servo circuit 2 (pss dual) (NG21)
5038	Indicator lamp, VEB (NC8)
5038	Indicator lamp, VEB (NJ6)
5039	Indicator lamp, air bag (NO10)
600 A	Solenoid valve, exh. brake (BL58)
600 A	Solenoid valve, exh. brake (BN5)
600 B	Solenoid valve, exh. brake (BL60)
600 B	Solenoid valve, exh. brake (BN10)
601	Solenoid valve, diff. lock, rear wheels (LG7)
602	Solenoid valve, diff. lock inter axles (LG5)
603	Solenoid valve, engine stop (BN58)
606	Solenoid valve, bogie lift, up (MA5)
606	Solenoid valve, bogie lift, up (MD5)
614	Solenoid valve, range inhibitor (AA46)
626	Solenoid valve, exh. pressure governor (AA41)
648	Solenoid valve, air-operated bogie (MP45)
648	Solenoid valve, air-operated bogie (MQ37)
648	Solenoid valve, air-operated bogie (MR45)
648	Solenoid valve, air-operated bogie (MS44)
650	Windscreen wiper motor (GA29)
651	Windscreen washer motor (GA3)
652 L	Headlamp wiper motor (GA15)
652 R	Headlamp wiper motor (GA19)
653	Headlamp washer motor (GA9)
654	Starter motor (AA10)
656	Bogie lift motor (MA23)
656	Bogie lift motor (MD33)
657	Fan (heater) (HA22)
660	Alternator with charging regulator (AA21)
661 D	Window winder motor (KA12)
661 P	Window winder motor (KA4)
6013 LF	Solenoid control valve, ABS (OA37)
6013 LR	Solenoid control valve, ABS (OA51)
6013 RF	Solenoid control valve, ABS (OA44)
6013 RR	Solenoid control valve, ABS (OA58)
6018	Solenoid valve, retarder (OG6)
6022A L	Solenoid valve, air evacuation (MW8)
6022A R	Solenoid valve, air evacuation (MW13)
6022B L	Solenoid valve, air evacuation (MW20)
6022B R	Solenoid valve, air evacuation (MW24)
6022L	Solenoid valve, air evacuation (MV10)
6022R	Solenoid valve, air evacuation (MV15)
6024	Solenoid valve, pto (LD8)
6024 A	Solenoid valve, pto (LE10)
6024 B	Solenoid valve, pto (LE20)
6041	Solenoid valve, gear lever carrier (LO58)
6043	Solenoid valve, air suspension, front axle (MN12)
6043	Solenoid valve, air suspension, front axle (MP12)
6043	Solenoid valve, air suspension, front axle (MQ12)
6043	Solenoid valve, air suspension, front axle (MR12)
6043	Solenoid valve, air suspension, front axle (MS12)
6043	Solenoid valve, air suspension, front axle (MX12)
6043	Solenoid valve, air suspension, front axle (MY12)
6044	Solenoid valve, rear axle (MN18)
6044	Solenoid valve, rear axle (MP17)
6044	Solenoid valve, rear axle (MQ17)
6044	Solenoid valve, rear axle (MR17)
6044	Solenoid valve, rear axle (MS17)

6044	Solenoid valve, rear axle (MX18)
6044	Solenoid valve, rear axle (MY18)
6045	Solenoid valve, trailing axle (MP34)
6045	Solenoid valve, trailing axle (MQ32)
6045	Solenoid valve, trailing axle (MR26)
6045	Solenoid valve, trailing axle (MS28)
6045	Solenoid valve, trailing axle (MX28)
6045	Solenoid valve, trailing axle (MY27)
6048	Solenoid valve block, gearbox (LO38)
6049	Solenoid valve block, clutch cylinder (LO55)
6054	Fuel pump, parking heater (HB2)
6056 L	Motor, levelling control, headlights (PA4)
6056 R	Motor, levelling control, headlights (PA10)
6058 D	Motor, door lock (KH13)
6058 P	Motor, door lock (KG8)
6058 P	Motor, door lock (KH5)
6066	Motor, el. operated roof hatch (KB4)
6070	Motor, cab tilt pump (HP16)
6071	Injection pump, EDC (BN46)
6072	Unit injectors, UI (BL37)
702 A	Combined instrument (NA17)
702 A DIS	Combined instrument (NG19)
702 B	Combined instrument (NB14)
702 C	Combined instrument (NC7)
702 C DIS	Combined instrument (NJ5)
702 O	Combined instrument (NO10)
705	Pressure gauge, oil (NA13)
706	Thermometer, coolant temp. gauge (NA15)
707	Fuel gauge (NC12)
709	Clock (NB8)
713	Voltmeter (NA10)
753	Engine, speed sensor (LO20)
753 A	Engine, speed sensor, flywheel (BL4)
753 B	Sensor, cylinder identification, camshaft (BL10)
754	Pressure sensor air (NJ39)
754 F	Pressure sensor air (NJ22)
754 R	Pressure sensor air (NJ25)
756	Temperature sensor, coolant (AA40)
756 B	Temperature sensor, coolant (BL22)
756 B	Temperature sensor, coolant (BN39)
757	Fuel gauge sensor (NC16)
757	Fuel gauge sensor (NJ11)
7008	Air-operated horn (FA3)
7009	Alarm clock/timer (HB18)
7009	Alarm clock/timer (JA8)
7052	Sensor, speedometer (LO23)
7052	Sensor, speedometer (NB19)
7053	Inductive sensor, bogie lift (MD9)
7053	Sensor, bogie lift (MN23)
7053	Sensor, bogie lift (MP23)
7053	Sensor, bogie lift (MQ21)
7053	Sensor, bogie lift (MR21)
7053	Sensor, bogie lift (MS21)
7053	Sensor, bogie lift (MX23)
7053	Sensor, bogie lift (MY23)
7056	Sensor, oil temperature, engine (NJ29)
7057 LF	Sensor, pole wheel, ABS (OA34)
7057 LR	Sensor, pole wheel, ABS (OA48)
7057 RF	Sensor, pole wheel, ABS (OA41)
7057 RR	Sensor, pole wheel, ABS (OA55)
7059	Sensor, outer temperature (NJ36)
7060 A	Sensor, temperature, retarder (OG23)
7060 B	Sensor, temperature, retarder (OG16)
7061	Sensor, oil pressure (NA15)
7061	Sensor, oil pressure (NG27)
7065	Sensor, accelerator pedal (BL4)
7065	Sensor, accelerator pedal (BN37)
7065–2	Sensor, accelerator pedal (LO15)
7066	Sensor, turbo pressure (BL28)
7066	Sensor, turbo pressure (BN42)
7067	Sensor, intake air temperature, engine (BL16)
7067	Sensor, intake air temperature, engine (BN34)
7068	Sensor, clutch position (LO6)
800	Starting heater (AA33)
802 L	Heated rearview mirror (HG4)
802 R	Heated rearview mirror (HG8)
804	Cigarette lighter (ER45)
804	Cigarette lighter (ES51)
804	Cigarette lighter (EV8)
805	Rheostat (XD18)
810	Heated air dryer (HK4)
812 D	El. operated rearview mirror (HH10)
812 P	El. operated rearview mirror (HH3)
850	Horn (FA7)
858	Buzzer, reverse warner (EA15)
8001	Inductor, sign lighting (EJ8)
8001	Inductor, sign lighting (EK8)
8006	Air dryer with time relay (HK7)
8016	Fuel filter heater (HM14)
8018 L	El. connected seat (HD18)
8018 L	El. connected seat (HD6)
8018 R	El. connected seat (HD12)
8018 R	El. connected seat (HD23)
900	Radio (JA31)
900	Radio (JA8)
901 B	Voltage converter (EX4)
901 C	Voltage converter (EX10)
901 R	Voltage converter (JA10)
902 LD	Loudspeaker (JA13)
902 LD	Loudspeaker (JA35)
902 LF	Loudspeaker (JA29)
902 LF	Loudspeaker (JA7)
902 LR	Loudspeaker (JA19)
902 RD	Loudspeaker (JA16)
902 RD	Loudspeaker (JA38)
902 RF	Loudspeaker (JA10)
902 RF	Loudspeaker (JA32)
902 RR	Loudspeaker (JA22)
903	Diode (HM3)
903	Diode (MD2)
903 1	Diode (LE18)
903 D1	Diode (NB28)
903 LA	Diode (MY24)
903 LB	Diode (MY28)
903 LC	Diode (MY31)
903 LE	Diode (MY19)
903 SP1	Diode (CI9)
903 SP2	Diode (CI9)
903 SP3	Diode (CI10)
952	Magnetic clutch, air conditioning (HA17)
961	Engine/cab heater (HB8)
972 L	Lock, bunk (ES64)
972 R	Lock, bunk (ES59)
9001	Pressure monitor, bogie lift (MP40)
9001	Pressure monitor, bogie lift (MQ41)
9001	Pressure monitor, bogie lift (MR40)
9001	Pressure monitor, bogie lift (MS38)
9001	Pressure monitor, bogie lift (MX42)
9001	Pressure monitor, bogie lift (MY35)
9001 B	Pressure monitor, bogie lift (MQ49)
9006	Glow plug, parking heater (HB25)
9008	Control unit, ABS (OA34)
9009	Control box, air suspension, rigids (MN2)
9009	Control box, air suspension, rigids (MP2)
9009	Control box, air suspension, rigids (MQ2)
9009	Control box, air suspension, rigids (MR2)

9009	Control box, air suspension, rigids (MS2)
9009	Control box, air suspension, rigids (MX2)
9009	Control box, air suspension, rigids (MY2)
9010	Control box, air suspension, tractors (MN2)
9010	Control box, air suspension, tractors (MP2)
9010	Control box, air suspension, tractors (MQ2)
9010	Control box, air suspension, tractors (MR2)
9010	Control box, air suspension, tractors (MS2)
9010	Control box, air suspension, tractors (MX2)
9010	Control box, air suspension, tractors (MY2)
9026 F	Socket, 12 V (EX7)
9026 R	Socket, 12 V (EX13)
9027	Control unit, Driver Information System (NJ47)
9028	Contact roller, air bag (KE8)
9054	Control unit, retarder (OG3)
9057	Control unit, automatic transmission (LO16)
9057 3	Control unit, automatic transmission (LO2)
9069	Control unit, EDC (BN32)
9070	Control unit, unit injector (BL4)
9072	Control unit, air bag (KE7)

Abbreviations

AIR-DUMP	Drive axle load increase
C	Centre
CHH810	Chassis height 810mm
CHH850	Chassis height 850mm
D	Driver
DIS	Driver information system
DRL	Day running light
EDC	Electronically diesel control
F	Front
FST-AIR	Front spring type, air
FST-PAR	Front spring type, parabolic
L	Left
L	Lower
L1H1	Short cab
L2H1	Long cab
L2H2	Long high cab (Globetrotter)
L2H3	Long high cab (Globetrotter XL)
LF	Left front
LHS	Left hand side
LL	Left lower
LR	Left rear
LU	Left upper
P	Passenger
R	Right
RADT-A8	6x2, air spring rear, 8 air bellows
RF	Right front
RHS	Right hand side
Rigid	Plattform and tipper truck
RL	Right lower
RR	Right rear
RU	Right upper
SUSPL-E	Levelling control, electrically
Tractor	Semi-trailer tractor
TIMEDEV	AIR-DUMP with timing device
U	Upper
UI	Unit injector
USUSPLEV	Without levelling control
UTIMEDEV	AIR-DUMP without timing device

Cable colour code

BL	Blue
BN	Brown
GN	Green
GR	Grey
I	Ivory
LBL	Light blue
LBN	Light brown
OR	Orange
P	Pink
PU	Purple
R	Red
SB	Black
VO	Violet
W	White
Y	Yellow

Note: If a cable har two colours, this is written out like the following example: Y/R = Yellow/Red.

Feedback

One of our objectives is that workshop personnel should have access to correct and appropriate service manuals where it concerns fault tracing, repairs and maintenance of Volvo vehicles.
In order to maintain the high standards of our literature, your opinions and experience when using this manual would be greatly appreciated.
If you have any comments or suggestions, make a copy of this page, write down your comments and send them to us, either via telefax or mailing directly to the address listed below.

To

Volvo Parts Corporation
Dept. Technical Support Service 31820
SE-405 08 GÖTEBORG

Fax +46 31 661973

From

.....
.....
.....
.....
.....
.....
.....

Comments/proposals

.....
.....
.....
.....
.....
.....
.....
.....
.....
.....
.....
.....
.....
.....
.....

Concerns Service Manual: .....

VOLVO

Volvo Truck Corporation

Göteborg, Sweden

TSP23709/1 English 4500.4.96