Wire Description

Wire Number	Wire Color	Description
		Power Circuits
101	RD	Battery (+)
102	RD	Roading Lamps
103	RD	Hazard Lamps
104	YL	Horn Relay
105	RD	Key Switch
111	RD	Brake Lamps
112	PU	Main Power Relay Output
113	OR	Monitor
115	RD	Accessory Socket
116	BR	Rear Flood
117	YL	Rear Flood - ATCH
118	GY	Front Wiper
119	PK	Rear Wiper
122	BU	High Speed Relay
123	WH	Fuel Pump
124	GN	HVAC
125	OR	Product Link
126	RD	Machine ECM
133	OR	Monitor
136	GN	Supplemental Steering Control
143	BR	IMP Disable
144	GN	Beacon
145	BU	AWS Mode Switch
146	GY	PRM Module
157	YL	Front Flood - ATCH
158	BR	Front Flood
159	BU	Turn Signal
161	RD	Hazard Lamps
180	GN	Operator Seat
		Ground Circuits
200	BK	Main Chassis
202	BK	Machine Control 1
218	BK	Transmission ID Code 1
225	BK	Hydro Solenoid To Sensor
265	BK	Electronic Pump Control ID Code 2
		Basic Machine Circuits
304	WH	Starter Relay #1 Output
306	GN	Neutral Start Switch To Starter Relay
307	OR	Neutral Start Switch
308	YL	Main Power Relay Coil
309	GY	Alternator Regulator
310	PU	Start Aid Switch To Start Aid Solenoid
320	OR	Horn Switch To Horn Relay
321	BR	Backup Alarm Lamp / Travel Alarm
322	GY	Forward Warning Horn
324	BU	Differential Lock Solenoid
327	PK	Engine Shutdown Solenoid
331	OR	Backup Alarm Relay Coil
333	GN	Key Switch '6' Terminal
367	BU	Rear Warning Horn
384	BU	Glow Plugs
		Monitoring Circuits
403	GN	Alternator 'R' Terminal - Engine
404	YL	Hydraulic Oil Temperature Sensor
405	GY	Engine Oil Pressure Switch (Low)
406	PU	Coolant Temperature
420	OR	Fuel Filter
432	PK	Brake Oil Pressure
439	YL	Indicator - Lamp
441	OR	Coolant Temperature Gage
442	GY	Hydraulic Oil Temperature Gage
447	PK	Fuel Level Gage
450	YL	Engine Tachometer Sender (+)
452	PU	Torque Converter Oil Temperature
		Accessory Circuits
500	BR	Wiper - Front (Park)
501	GN	Wiper - Front (Low)
502	OR	Wiper - Front (High)
503	BR	Wiper - Rear (Park)
506	PU	Washer - Front
507	WH	Washer - Rear
508	PU	Radio Speaker - Left (+)
509	WH	Radio Speaker - Left (-)
511	BR	Radio Speaker - Right (+)
512	GN	Radio Speaker - Right (-)
513	OR	A/C Refrigerant Pressure Switch
515	GY	Hvac Blower Motor #1 (High)
516	GN	Hvac Blower Motor #1 (Medium)
517	BU	Hvac Blower Motor #1 (Low)
518	OR	Switch To Hazard Flasher
521	YL	Fan Speed Switch To A/C Pressure Switch
522	WH	A/C Clutch To Thermostat Switch
537	GN	Turn Signal Switch To Flasher
552	WH	All Wheel Drive Solenoid
564	GY	Rear Wiper Interrupt Switch To Wiper Switch
568	GN	Warning Buzzer To Diodes
569	PK	A/c Switch Jumper #2
576	BU	Washer - Auxiliary
585	YL	Auxiliary Hydraulics - Open #1
586	BR	Auxiliary Hydraulics - Close #1
		Lighting Circuits
601	GY	Dash Lamps - High
603	PK	Rotary Beacon Lamp
604	OR	Stop Lamps
605	YL	Turn Lamps - Left
606	GY	Turn Lamps - Right
607	PK	Flood Lamps - Front
608	GN	Flood Lamps - Rear
610	OR	Headlamps - Basic
611	PU	Headlamps - High Beam
614	PU	Tail / Position / Dash Lamps
617	BR	Tail / Position Lamp - Left
618	YL	Tail / Position Lamp - Right
619	GN	Headlamps - Low Beam
620	WH	Flood Lamps - Engine
627	YL	Fog Lamps
630	GY	Flood Lamps - Rear Attachment
		Control Circuits
702	OR	Transmission Brake Switch Jumper
708	YL	Transmission Hold Switch
720	PU	Transmission Brake Switch
751	GN	Transmission Shift Solenoid 1 Or 3
752	YL	Transmission Shift Solenoid 2
754	BU	Transmission Shift Solenoid 3 Or 1
762	YL	Bucket Positioner Solenoid Switch
766	GN	Transmission Disconnect Solenoid
774	YL	Traction Control Solenoid - Left
779	WH	Coupler Engage Solenoid
852	GN	Hydrostatic Charge Pressure Sensor
892	BR	CAT Data Link 3 (-)
893	GN	CAT Data Link 3 (+)
900	PU	Transmission Solenoid 4 Or 5 (+)
902	BR	Transmission Solenoid 7 (+)
903	GY	Transmission Solenoid 8 (+)
911	YL	All Wheel Drive Mode Switch Jumper
922	BR	Transmission Solenoid 2 Return
923	GY	Transmission Solenoid 3 Or 1 Return
973	BR	Autoshift Auto / Manual Switch
975	WH	Autoshift Solenoid Return
976	OR	Ride Control Solenoid 1
977	YL	Autoshift Auto / Manual Switch
A250	BK	Battery (-)
A305	YL	Relay To Warning Horn(s)
A346	BU	Crank Driver Output - MSS
A347	GN	Switch 'ON' Driver Output - MSS
A884	WH	Console Select Switch To Relay / Diode
C511	WH	Relay Power
C558	WH	HVAC Blower Motor (MAX)
C720	BU	Relay Interlock
C743	PK	Parking Brake Switch To Switch
E455	BR	Hydraulic Oil Filter
E528	PU	Hvac On/off Switch To Blower Speed Switch
E529	YL	Blower Switch Jumper
E540	PK	Auxiliary Hydraulic Interlock
E543	WH	Auxiliary Hydraulic Return Solenoid - Close
E544	GN	Auxiliary Hydraulic Return Solenoid - Open
E701	PK	Automatic Ride Control Switch 1
E803	YL	Independent Steer Solenoid - Right
E804	BU	Independent Steer Solenoid - Left
E885	OR	Bucket Dump Exchange (+)
E900	WH	Transmission Output Speed (+)
E901	GN	Transmission Output Speed (-)
E917	WH	Implement Lockout Switch (N.O.)
E918	GN	Implement Lockout Switch (N.C.)
E991	GY	Multi-function Output 3
F420	GN	Indicator - Warning
F711	GN	Engine CAN Datalink 1 (+)
F712	GY	Engine CAN Datalink 1 (-)
F738	WH	Active Ride Control Switch (no)
F739	GN	Active Ride Control Switch (nc)
F748	WH	Ride Control Switch
F846	PU	LED Driver 1
F871	PU	Left Side Steering Jumper
F872	BU	Right Side Steering Jumper
G423	PK	High Pressure Implement Filter 2
G703	GN	Quick Drop Valve
G735	GY	Relay To Solenoid
G750	BU	Transmission Forward Switch
G755	GY	Transmission Reverse Switch
G789	BR	Mode Switch To Pressure Switch
G795	OR	AWS Mode Switch To Rear Steering Switch
G796	YL	AWS Mode Switch To Rear Steering Switch
G848	GN	LED Driver 2
G962	OR	Pilot Cutout Solenoid
H705	BR	Pump Relay
H707	YL	Pump Torque Solenoid
H730	BR	Shuttle Control - Reverse
H731	GY	Shuttle Control - Forward
H764	GY	Steering Position Sensor - Rear
H767	BR	AWS Solenoid Ground 1
H770	BR	AWS Solenoid Ground 4
H771	BR	Sideshift Lock Solenoid
J764	BR	Switch / Sensor Return 1
K764	WH	Stick Extend Solenoid (+)
K766	PK	Stick Retract Solenoid (+)
L745	BR	5v Analog Sensor Return
L998	OR	Auxiliary Hydraulic Solenoid B
L999	GN	Auxiliary Hydraulic Solenoid C
M719	GN	Sideshift Left Switch
M720	BU	Sideshift Left Relay
M721	WH	Sideshift Right Switch
M936	BR	Flow Control Switch
M937	GN	Flow Control Proximity Switch
M952	BU	LH Joystick
M965	GN	RH Joystick
M968	BU	Coupler Switch Interconnect
M969	YL	Coupler Switch Interconnect
N756	PK	Alarm Horn
N939	GN	Ride Control Solenoid 2
N945	OR	Front Brake Solenoid 1
N957	PK	RXD - Comm 1
N960	OR	TXD - Comm 1
N970	YL	DTR - Comm 1
N973	BR	DCD - Comm 1
N979	GN	Signal Ground - Comm 1
N987	WH	PWM - Frequency In 1
P914	GN	Indicator - Transmission Forward
P993	OR	Auxiliary Hydraulics Select
R762	GY	Tractor Mode Select Switch
R763	BU	Scraper Mode Select Switch
R912	OR	Hydraulic Pedal Lock Solenoid
T904	BU	RH Stabilizer Up Solenoid
T907	GN	LH Stabilizer Down Solenoid
T969	YL	Auxiliary Circuit 1
T971	OR	Auxiliary Circuit 3
X750	OR	Forward / Reverse Solenoid Return
X800	OR	8V Sensor Power
X977	YL	Fuel Pump (+)

Component Identifiers (CID[1]) Module Identifier (MID[2]) Machine ECM (MID No. 039)

CID	Component
0041	8 VDC Supply
0168	Electrical System Voltage
0191	Speed Sensor (Transmission Output)
0367	Ride Control Switch
0368	Switch (transmission Auto/Man)
0490	Implement Lockout Switch
0600	Hydraulic Oil Temperature Sensor
0626	Steering / Transmission Lock Switch
0629	Neutralizer Switch
0668	Transmission Shift Lever
0702	Transmission Gear Level Selector Sensor
1037	Display Module
1187	Continuous Flow Switch
1251	Alternator R-Terminal Signal
1401	Transmission Solenoid 1
1402	Transmission Solenoid 2
1403	Transmission Solenoid 3
1404	Transmission Solenoid 4
1405	Transmission Solenoid 5
1406	Transmission Solenoid 6
1482	10 VDC Supply
1529	Quick Coupler Switch
1956	Bucket Cylinder Position Sensor
1957	Stick Cylinder Position Sensor
1958	E-Stick Position Sensor
1959	Boom Cylinder Position Sensor
2108	Swing Position Sensor
2236	E-Stick Extend Solenoid
2237	E-Stick Retract Solenoid
2242	Loader Auxiliary Valve Solenoid 1
2243	Loader Auxiliary Valve Solenoid 2
2244	Hoe Auxiliary Valve Solenoid 1
2245	Hoe Auxiliary Valve Solenoid 2
2529	FWR Joystick Thumbwheel
2530	LH Joystick Thumbwheel
2531	RH Joystick Thumbwheel

[1] The CID is a diagnostic code that indicates which circuit is faulty.
[2] The MID is a diagnostic code that indicates which electronic control module diagnosed the fault.

Event Codes Machine ECM

EID	Description
43	Low System Voltage Warning
50	High System Voltage Warning
232	Low Brake Boost Pressure
282	Implement Hydraulic Oil Filter Restricted
360	High Engine Coolant Temperature
361	High Fuel/Water Separator Water Level
391	Low Engine Oil Pressure
627	Machine Driven with Parking Brake On
797	Swing Angle Out of Range
798	High Hydraulic Oil Temperature
878	Brake Fluid Level Low
2114	Air Inlet Restriction

Failure Mode Identifiers (FMI)[1]

FMI No.	Failure Description
00	Data valid but above normal operational range.
01	Data valid but below normal operational range.
02	Data erratic, intermittent, or incorrect.
03	Voltage above normal or shorted high.
04	Voltage below normal or shorted low.
05	Current below normal or open circuit.
06	Current above normal or grounded circuit.
07	Mechanical system not responding properly.
08	Abnormal frequency, pulse width, or period.
09	Abnormal update.
10	Abnormal rate of change.
11	Failure mode not identifiable
12	Bad device or component.
13	Out of calibration.
14-31	Reserved

[1] The FMI is a diagnostic code that indicates what type of failure has occurred.

Related Electrical Service Manuals

Title	Form Number
Electric Starting Motor: 143-0539	SENR3828
Machine Troubleshooting	RENR6488
Engine Troubleshooting: 3054E & 3056E	RENR2417

Volume 1 - Connector Location

Connector Number	Schematic Location	Machine Location
CONN 1	F-13	B-12, M-12
CONN 2	H-13	D-14, M-14
CONN 3	G-13	D-14, M-14
CONN 4	H-13	D-14, M-14
CONN 5	A-11	B-13, N-13
CONN 6	A-11	B-13, N-13
CONN 7	B-11	B-13, N-13
CONN 8	B-11	B-13, N-13
CONN 9	C-11	B-13, N-13
CONN 10	D-11	B-13, N-13
CONN 11	A-9	C-12, L-12
CONN 12	B-9	C-9, L-9
CONN 13	E-9	D-10, N-10
CONN 14	F-9	D-10, N-10
CONN 15	A-4	C-12, L-12
CONN 16	A-4	C-12, L-12
CONN 17	B-4	C-12, L-12
CONN 18	E-1	C-12, L-12
CONN 19	F-1	C-9, N-9
CONN 20	G-1	B-13, N-13
CONN 21	G-1	C-12, L-12
CONN 22	H-1	C-10, M-10
CONN 23	I-1	C-12, L-12
CONN 24	I-1	B-9, K-9

The connectors shown in this chart are for harness to harness connectors. Connectors that join a harness to a component are generally located at or near the component. See the Component Location Chart.

Volume 1 - Component Location

Component	Schematic Location	Machine Location
FNR Shift Handle	F-9	D-10, O-10
Fuse Block	F-3	A
Joystick, Loader	A-7	A
Machine ECM	H-7	D-14, L-14
Module, PRM #1	I-3	B
Module, PRM #2	I-3	B
Module, PRM HVAC	I-2	B
Motor, Operator Seat	F-1	D-12, L-12
Relay, AWD Brake	F-4	B
Relay, Backup Alarm	F-4	B
Relay, Differential Lock	C-4	B
Relay, Flasher	I-1	B
Relay, Forward Horn	C	B
Relay, Implement Enable	C-4	B
Relay, Rear Horn	G-4	B
Relay, Ride Control	F-4	B
Relay, Stabilizer Timer	I-13	C-14, N-14
Relay, Torque Limiter	I-1	B
Resistor, Terminal	D-14	A
Sensor, Hydraulic Oil Temperature	G-1	D-11, L-11
Service Meter	I-8	E-10, O-10
Switch, Autoshift Manual	F-8	D-10, N-10
Switch, AWD	G-8	E-10, O-10
Switch, AWD Italy	H-8	E-10, O-10
Switch, Beacon	C-14	A
Switch, Brake LH	H-9	E-10, O-10
Switch, Brake RH	H-9	E-10, O-10
Switch, Cont Flow 7-8	D-14	A
Switch, Control Pattern	I-9	F-9, L-9
Switch, Differential Lock	H-9	F-9, L-9
Switch, Front Console Horn	H-8	E-10, O-10
Switch, Front Work Lamp	D-14	A
Switch, Hazard	D-9	D-10, O-10
Switch, Hydraulic Oil Filter Bypass	G-1	D-11, L-11
Switch, Implement Lockout	A-13	A
Switch, Key	A-15	A
Switch, Neutral XMSN Handle	F-1	A
Switch, Park Brake	C-12	A
Switch, Power SS	D-15	A
Switch, Rear Fog Lamp	B-14	A
Switch, Rear Wiper	A-14	A
Switch, Rear Work Lamp	C-14	A
Switch, Ride Control	G-8	E-10, O-10
Switch, Roading	F-8	E-10, O-10
Switch, Side Shift Lock	D-14	A
Switch, Stalls	E-9	E-10, O-10
Switch, Start Aid	A-14	A
Switch, XMSN Lock	H-8	E-10, O-10
Tachometer	C-15	A
Valve, Stabilizer	I-15	C-14, N-14

Machine Locations Are Repeated For Components Located Close Together.
A = Located Inside Of Side Console.
B = Located Around Fuse Block.

Volume 1 - Resistor, Sender and Solenoid Specifications

Part No.	Component Description	Resistance (Ohms)[1]
134-2040	Resistor: CAN Terminating	120

[1] At room temperature unless otherwise noted.

Harness And Wire Electrical Schematic Symbols

Symbols

Pressure Symbol · Temperature Symbol · Level Symbol · Flow Symbol · Circuit Breaker Symbol

Symbols and Definitions

Fuse - A component in an electrical circuit that will open the circuit if too much current flows through it.

Switch (Normally Open): A switch that will close at a specified point (temp, press, etc.). The circle indicates that the component has screw terminals and a wire can be disconnected from it.

Switch (Normally Closed): A switch that will open at a specified point (temp, press, etc.). No circle indicates that the wire cannot be disconnected from the component.

Ground (Wired): This indicates that the component is connected to a grounded wire. The grounded wire is fastened to the machine.

Ground (Case): This indicates that the component does not have a wire connected to ground. It is grounded by being fastened to the machine.

Reed Switch: A switch whose contacts are controlled by a magnet. A magnet closes the contacts of a normally open reed switch; it opens the contacts of a normally closed reed switch.

Sender: A component that is used with a temperature or pressure gauge. The sender measures the temperature or pressure. Its resistance changes to give an indication to the gauge of the temperature or pressure.

Relay (Magnetic Switch): A relay is an electrical component that is activated by electricity. It has a coil that makes an electromagnet when current flows through it. The electromagnet can open or close a valve or move a piece of metal that can do work.

Solenoid: A solenoid is an electrical component that is activated by electricity. It has a coil that makes an electromagnet when current flows through it. The electromagnet can open or close a valve or move a piece of metal that can do work.

MAGNETIC LATCH SOLENOID - A magnetic latch solenoid is an electrical component that is activated by electricity and held latched by a permanent magnet. It has two coils (latch and unlatch) that make electromagnetic current flows through them. It also has an internal switch that places the latch coil circuit open at the time the coil latches.

Harness and Wire Symbols

Deutsch connector: Typical representation of a Deutsch connector. The plug contains all sockets and the receptacle contains all pins.

Sure-Seal connector: Typical representation of a Sure-Seal connector. The plug and receptacle contain both pins and sockets.

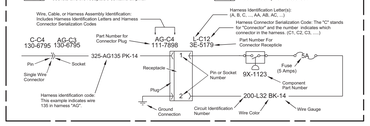

CATERPILLAR®

KENR8229
July 2007

KENR8229 VOL 1 of 2
36 Page, (Dimensions: 48 inches x 35 inches)

Schematic

432E, 434E, 442E, 444E Backhoe Loader Electrical System

BXE2200-UP
FSH900-UP
GKZ600-UP
LBE600-UP

Volume 1 of 2: Cab

© 2007 Caterpillar, All Rights Reserved

Printed in U.S.A.

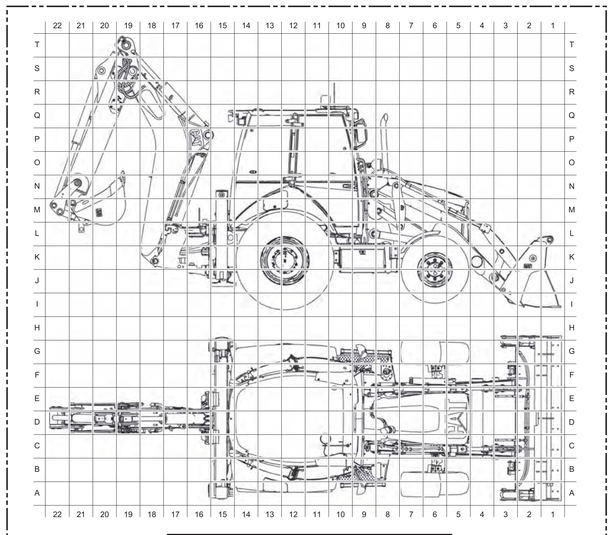

Machine Connector & Component Locations

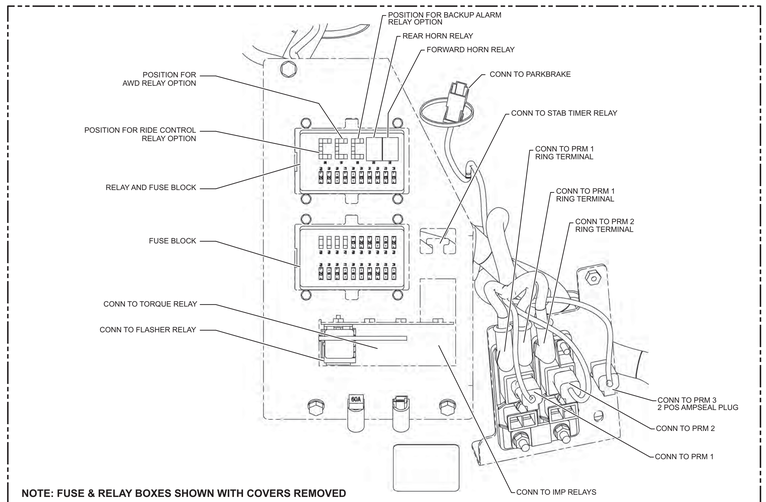

NOTE: FUSE & RELAY BOXES SHOWN WITH COVERS REMOVED

FRONT VIEW OF FUSE AND PRM BRACKET

KENR8229 VOL 1 of 2

36 Page, Color 2, (Dimensions: 48 inches x 35 inches)

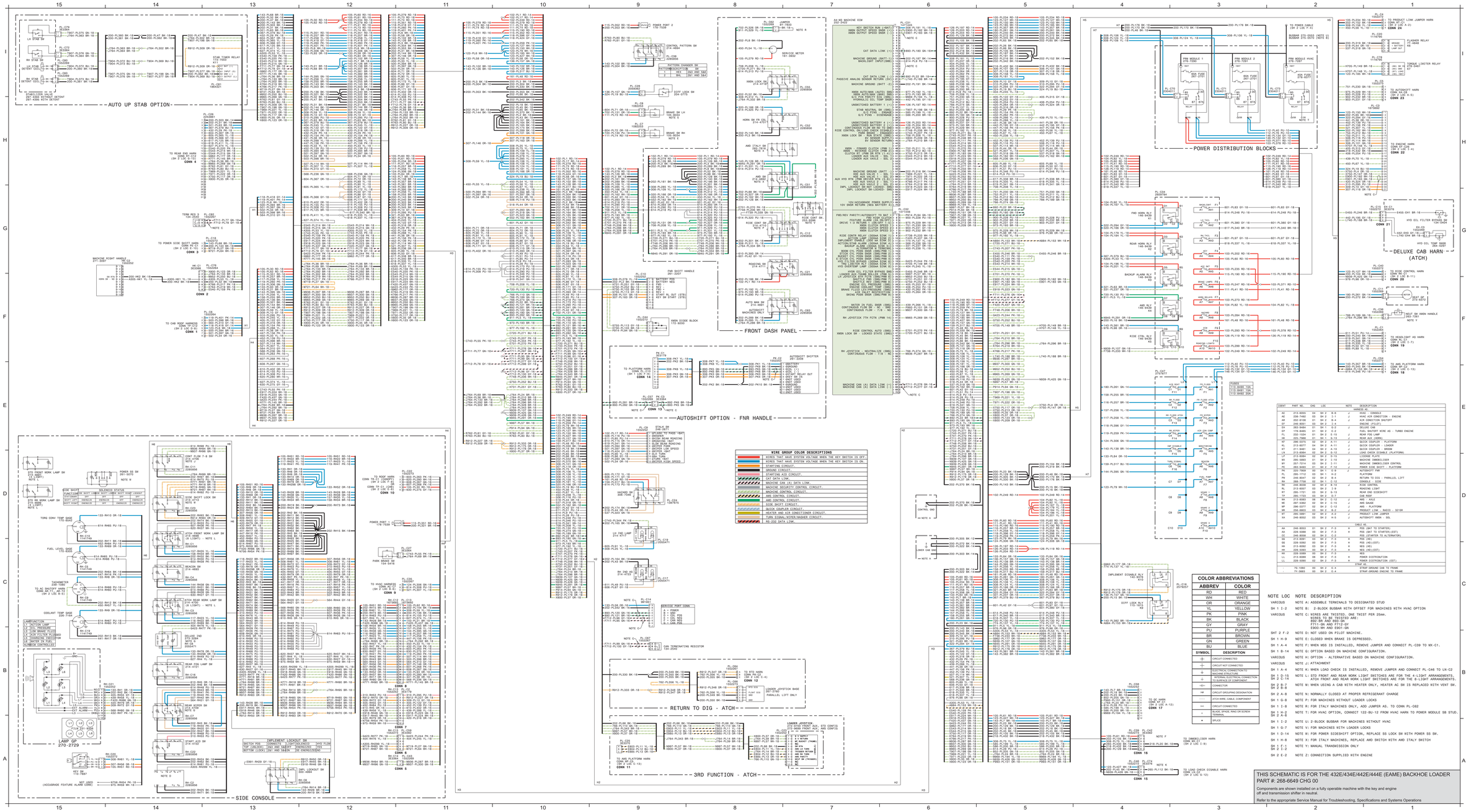

CONT	PART NO.	CHG	LOC	NOTE	DESCRIPTION
	HARNESS AS.				
AC	213-6000	04	SH 2 B-6	J	HVAC - CONSOLE
AD	213-6010	04	SH 2 B-6	J	HVAC - CAB CONDITION - ENGINE
AE	202-0106	01	SH 2 B-4	J	AIR CONDITIONER SHUTOFF
EF	246-8051	03	SH 2 I-4		ENGINE (STUB)
EH	263-9484	01	SH 2 G-2		DELUXE CAB
EF	178-8465	01	SH 2 E-2		FUEL SHUTOFF WIRE AS - TURBO ENGINE
FL	232-1534	01	SH 2 E-15	J	REAR FOG LAMP
HK	225-7989	01	SH 1 G-13	J	REAR AUX (HDBK)
KA	213-6020	04	SH 2 A-10	J	QUICK COUPLER - PLATFORM
KL	213-6027	04	SH 2 A-11	J	QUICK COUPLER - LOADER
KT	211-9461	04	SH 2 A-10	J	QUICK COUPLER - BROOM
LS	213-6064	02	SH 2 E-15	J	CAB OVER STANDS (PLATFORM)
LP	213-6084	02	SH 2 D-15		LICENSE PLATE
LT	213-6074	02	SH 2 D-15	J	LIGHT TOWER/STOWER
MD	257-7374	03	SH 2 I-7	J	MACHINE DIAGNOSTIC CONTROL
PE	263-9493	01	SH 2 F-12	J	POWER SIDE SHIFT - PLATFORM
PK	225-7969	01	SH 1 H-2		AUTOSHIFT PWR
PL	296-1712	03	SH 1 H-2		PLATFORM
PR	246-8047	01	SH 2 B-8		RETURN TO DIG - PARALLEL LIFT
RH	268-7758	02	SH 2 I-11		CONSOLE - SIDE
RL	213-6037	03	SH 2 D-13	J	REAR END SIDESHIFT
RM	213-6057	03	SH 2 D-13	J	REARING LIGHT
RT	296-1721	03	SH 2 E-13		REAR END SIDESHIFT
SF	296-1723	03	SH 2 D-13		AIR HOOK
SA	213-6083	06	SH 2 C-12	J	AWD - AXLE
SB	296-6276	02	SH 2 C-12	J	AWD - PLATFORM
SF	296-6277	02	SH 2 C-12	J	AWD - PLATFORM
WR	296-6803	03	SH 2 B-2	J	PRODUCT LINK - RADIO - 3D108
WT	296-6861	02	SH 2 B-2	J	PRODUCT LINK JUMPER
XA	246-8052	03	SH 1 H-2	J	AUTOSHIFT HNDW - SOL
	CABLES				
AA	246-8053	01	SH 2 F-3	H	POS (SMT TO STARTER)
AB	226-5066	01	SH 2 F-3	H	POS (SMT TO STARTER(EST)
CC	246-8058	00	SH 2 C-2		POS (STARTER TO ALTERNATOR)
GG	213-6061	03	SH 2 F-3	H	MSS (HD)
GG	226-5092	00	SH 2 F-3	H	MSS (HD(EST)
HH	213-6062	03	SH 2 F-3	H	MSS (HD)
HH	226-5093	00	SH 2 F-3	H	MSS (HD(EST)
KK	226-5089	00	SH 2 F-3		MSS
LL	213-6089	06	SH 2 F-3	H	POWER DISTRIBUTION
LL	226-5090	02	SH 2 F-3	H	POWER DISTRIBUTION (EST)
	STRAP AS.				
-	79-1060	00	SH 2 E-4		STRAP-GROUND CAB TO FRAME
-	77-3883	00	SH 2 E-4		STRAP-GROUND ENGINE TO FRAME

NOTE LOC	NOTE DESCRIPTION
VARIOUS	NOTE A: ASSEMBLE TERMINALS TO DESIGNATED STUD
SH 1 I-2	NOTE B: 2-BLOCK BUSBAR WITH OFFSET FOR MACHINES WITH HVAC OPTION
VARIOUS	NOTE C: WIRES ARE TWISTED. ONE TWIST PER 25mm. WIRES TO BE TWISTED ARE: RSD-BR AND RSD-GY FT11-GN AND FF12-GY EGOD-RH AND EGO1-GN
SHT 2 F-2	NOTE D: NOT USED ON P1LOT MACHINE.
SH 1 H-9	NOTE E: CLOSED WHEN BRAKE IS DEPRESSED.
SH 1 A-4	NOTE F: WHEN MSS IS INSTALLED, REMOVE JUMPER AND CONNECT PL-C39 TO MX-C1.
SH 1 B-14	NOTE G: OPTION BASED ON MACHINE CONFIGURATION.
VARIOUS	NOTE H: OPTION - ALTERNATIVE BASED ON MACHINE CONFIGURATION.
VARIOUS	NOTE J: ATTACHMENT
SH 1 A-4	NOTE K: WHEN LOAD CHECK IS INSTALLED, REMOVE JUMPER AND CONNECT PL-C46 TO LN-C2
SH 1 D-15 SH 2 C-14	NOTE L: STD FRONT AND REAR WORK LIGHT SWITCHES ARE FOR THE 4-LIGHT ARRANGEMENTS. ATCH FRONT AND REAR WORK LIGHT SWITCHES ARE FOR THE 8-LIGHT ARRANGEMENTS.
SH 2 B-7 SH 2 B-8	NOTE M: WHEN USING A CAB WITH HEATER ONLY, HEATER AC SW IS REPLACED WITH VENT SW.
SH 2 A-8	NOTE N: NORMALLY CLOSED AT PROPER REFRIGERANT CHARGE
SH 1 G-8	NOTE P: FOR MACHINES WITHOUT LOADER LOCKS
SH 1 I-8	NOTE R: FOR ITALY MACHINES ONLY, ADD JUMPER AS. TO CONN PL-C62
SH 1 H-2 SH 2 A-6	NOTE T: FOR HVAC OPTION, CONNECT 122-BU-12 FROM HVAC HARN TO POWER MODULE SB STUD.
SH 1 I-2	NOTE U: 2-BLOCK BUSBAR FOR MACHINES WITHOUT HVAC
SH 1 G-7	NOTE V: FOR MACHINES WITH LOADER LOCKS
SH 1 D-14	NOTE W: FOR POWER SIDESHIFT OPTION, REPLACE SS LOCK SW WITH POWER SS SW.
SH 1 H-8	NOTE X: FOR ITALY MACHINES, REPLACE AWD SWITCH WITH AWD ITALY SWITCH
SH 1 F-1 SH 2 I-2	NOTE Y: MANUAL TRANSMISSION ONLY
SH 2 E-2	NOTE Z: CONNECTION SUPPLIED WITH ENGINE

COLOR ABBREVIATIONS

ABBREV	COLOR
RD	RED
WH	WHITE
OR	ORANGE
YL	YELLOW
PK	PINK
BK	BLACK
GY	GRAY
PU	PURPLE
BR	BROWN
GN	GREEN
BU	BLUE

SYMBOL	DESCRIPTION
	CIRCUIT CONNECTED
	CIRCUIT NOT CONNECTED
	ELECTRICAL CONNECTION TO CHASSIS GROUND
	INTERNAL ELECTRICAL CONNECTION TO SURFACE OF COMPONENT
	CONNECTOR
##	CIRCUIT GROUPING DESIGNATION
	STICK WIRE, CABLE, COMPONENT
	CIRCUIT CONNECTED
	BLADE, SPADE, RING OR SCREW TERMINAL
	SPLICE

THIS SCHEMATIC IS FOR THE 432E/434E/442E/444E (EAME) BACKHOE LOADER
PART #: 268-6649 CHG 00

Components are shown installed on a fully operable machine with the key and engine off and transmission shifter in neutral.

Refer to the appropriate Service Manual for Troubleshooting, Specifications and Systems Operations

CATERPILLAR®

Schematic

432E, 434E, 442E, 444E Backhoe Loader Electrical System

BXE2200-UP
FSH900-UP
GKZ600-UP
LBE600-UP

Volume 2 of 2: Cab

© 2007 Caterpillar, All Rights Reserved

Printed in U.S.A.

KENR8229 VOL 2 of 2
36 Page, (Dimensions: 48 inches x 35 inches)

Harness And Wire Electrical Schematic Symbols

Symbols

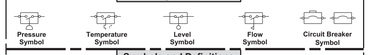

Symbols and Definitions

Fuse - A component in an electrical circuit that will open the circuit if too much current flows through it.

Switch (Normally Open): A switch that will close at a specified point (temp, press, etc.). The circle indicates that the component has screw terminals and a wire can be disconnected from it.

Switch (Normally Closed): A switch that will open at a specified point (temp, press, etc.). No circle indicates that the wire cannot be disconnected from the component.

Ground (Wired): This indicates that the component is connected to a grounded wire. The grounded wire is fastened to the machine.

Ground (Case): This indicates that the component does not have a wire connected to ground. It is grounded by being fastened to the machine.

Reed Switch: A switch whose contacts are controlled by a magnet. A magnet closes the contacts of a normally open reed switch; it opens the contacts of a normally closed reed switch.

Sender: A component that is used with a temperature or pressure gauge. The sender measures the temperature or pressure. Its resistance changes to give an indication to the gauge of the temperature or pressure.

Relay (Magnetic Switch): A relay is an electrical component that is activated by electricity. It has a coil that makes an electromagnet when current flows through it. The electromagnet can open or close a valve or move a piece of metal that can do work.

Solenoid: A solenoid is an electrical component that is activated by electricity. It has a coil that makes an electromagnet when current flows through it. The electromagnet can open or close a valve or move a piece of metal that can do work.

MAGNETIC LATCH SOLENOID - A magnetic latch solenoid is an electrical component that is activated by electricity and held latched by a permanent magnet. It has two coils (latch and unlatch) that make electromagnetic when current flows through them. It also has an internal switch that places the latch coil circuit open at the time the coil latches.

Harness and Wire Symbols

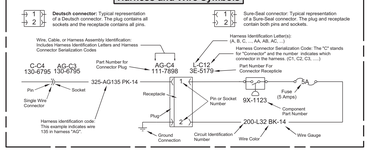

Wire Description

Wire Number	Wire Color	Description
		Power Circuits
101	RD	Battery (+)
102	RD	Roading Lamps
103	RD	Hazard Lamps
104	YL	Horn Relay
105	RD	Key Switch
111	RD	Brake Lamps
112	PU	Main Power Relay Output
113	OR	Monitor
115	RD	Accessory Socket
116	BR	Rear Flood
117	YL	Rear Flood - ATCH
118	GY	Front Wiper
119	PK	Rear Wiper
122	BU	High Speed Relay
123	WH	Fuel Pump
124	GN	HVAC
125	OR	Product Link
126	RD	Machine ECM
133	OR	Monitor
136	GN	Supplemental Steering Control
143	BR	IMP Disable
144	GN	Beacon
145	BU	AWS Mode Switch
146	GY	PRM Module
157	YL	Front Flood - ATCH
158	BR	Front Flood
159	BU	Turn Signal
161	RD	Hazard Lamps
180	GN	Operator Seat
		Ground Circuits
200	BK	Main Chassis
202	BK	Machine Control 1
218	BK	Transmission ID Code 1
225	BK	Hydro Solenoid To Sensor
265	BK	Electronic Pump Control ID Code 2
		Basic Machine Circuits
304	WH	Starter Relay #1 Output
306	GN	Neutral Start Switch To Starter Relay
307	OR	Neutral Start Switch
308	YL	Main Power Relay Coil
309	GY	Alternator Regulator
310	PU	Start Aid Switch To Start Aid Solenoid
320	OR	Horn Switch To Horn Relay
321	BR	Backup Alarm Lamp / Travel Alarm
322	GY	Forward Warning Horn
324	BU	Differential Lock Solenoid
327	PK	Engine Shutdown Solenoid
331	OR	Backup Alarm Relay Coil
333	GN	Key Switch "R" Terminal
367	BU	Rear Warning Horn
384	BU	Glow Plugs
		Monitoring Circuits
403	GN	Alternator "R" Terminal - Engine
404	YL	Hydraulic Oil Temperature Sensor
405	GY	Engine Oil Pressure Switch (Low)
406	PU	Coolant Temperature
420	OR	Fuel Filter
432	PK	Brake Oil Pressure
439	YL	Indicator - Lamp
441	OR	Coolant Temperature Gage
442	GY	Hydraulic Oil Temperature Gage
447	PK	Fuel Level Gage
450	YL	Engine Tachometer Sender (+)
452	PU	Torque Converter Oil Temperature
		Accessory Circuits
500	BR	Wiper - Front (Park)
501	GN	Wiper - Front (Low)
502	OR	Wiper - Front (High)
503	BR	Wiper - Rear (Park)
506	PU	Washer - Front
507	WH	Washer - Rear
508	PU	Radio Speaker - Left (+)
509	WH	Radio Speaker - Left (-)
511	BR	Radio Speaker - Right (+)
512	GN	Radio Speaker - Right (-)
513	OR	A/C Refrigerant Pressure Switch
515	GY	Hvac Blower Motor #1 (High)
516	GN	Hvac Blower Motor #1 (Medium)
517	BU	Hvac Blower Motor #1 (Low)
518	OR	Switch To Hazard Flasher
521	YL	Fan Speed Switch To A/C Pressure Switch
522	WH	A/C Clutch To Thermostat Switch
537	GN	Turn Signal Switch To Flasher
552	WH	All Wheel Drive Solenoid
564	GY	Rear Wiper Interrupt Switch To Wiper Switch
568	GN	Warning Buzzer To Diodes
569	PK	A/c Switch Jumper #2
576	BU	Washer - Auxiliary
585	YL	Auxiliary Hydraulics - Open #1
586	BR	Auxiliary Hydraulics - Close #1
		Lighting Circuits
601	GY	Dash Lamps - High
603	PK	Rotary Beacon Lamp
604	OR	Stop Lamps
605	YL	Turn Lamps - Left
606	GY	Turn Lamps - Right
607	PK	Flood Lamps - Front
608	GN	Flood Lamps - Rear
610	OR	Headlamps - Basic
611	PU	Headlamps - High Beam
614	PU	Tail / Position / Dash Lamps
617	BR	Tail / Position Lamp - Left
618	YL	Tail / Position Lamp - Right
619	GN	Headlamps - Low Beam
620	WH	Flood Lamps - Engine
627	YL	Fog Lamps
630	GY	Flood Lamps - Rear Attachment
		Control Circuits
702	OR	Transmission Brake Switch Jumper

Wire Number	Wire Color	Description
		Control Circuits (Continued)
708	YL	Transmission Hold Switch
720	PU	Transmission Brake Switch
751	GN	Transmission Shift Solenoid 1 Or 3
752	YL	Transmission Shift Solenoid 2
754	BU	Transmission Shift Solenoid 3 Or 1
762	YL	Bucket Positioner Solenoid Switch
766	GN	Transmission Disconnect Solenoid
774	YL	Traction Control Solenoid - Left
779	WH	Coupler Engage Solenoid
852	GN	Hydrostatic Charge Pressure Sensor
892	BR	CAT Data Link 3 (-)
893	GN	CAT Data Link 3 (+)
900	PU	Transmission Solenoid 4 Or 5 (+)
902	BR	Transmission Solenoid 7 (+)
903	GY	Transmission Solenoid 8 (+)
911	YL	All Wheel Drive Mode Switch Jumper
922	BR	Transmission Solenoid 2 Return
923	GY	Transmission Solenoid 3 Or 1 Return
973	BR	Autoshift Auto / Manual Switch
975	WH	Autoshift Solenoid Return
976	OR	Ride Control Solenoid 1
977	YL	Autoshift Auto / Manual Switch
A250	BK	Battery (-)
A305	YL	Relay To Warning Horn(s)
A346	BU	Crank Driver Output - MSS
A347	GN	Switch "ON" Driver Output - MSS
A884	WH	Console Select Switch To Relay / Diode
C511	WH	Relay Power
C558	WH	HVAC Blower Motor (MAX)
C720	BU	Relay Interlock
C743	PK	Parking Brake Switch To Switch
E455	BR	Hydraulic Oil Filter
E528	PU	Hvac On/off Switch To Blower Speed Switch
E529	YL	Blower Switch Jumper
E540	PK	Auxiliary Hydraulic Interlock
E543	WH	Auxiliary Hydraulic Return Solenoid - Close
E544	GN	Auxiliary Hydraulic Return Solenoid - Open
E701	PK	Automatic Ride Control Switch 1
E803	YL	Independent Steer Solenoid - Right
E804	BU	Independent Steer Solenoid - Left
E885	OR	Bucket Dump Exchange (+)
E900	WH	Transmission Output Speed (+)
E901	GN	Transmission Output Speed (-)
E917	WH	Independent Lockout Switch (N.O.)
E918	GN	Implement Lockout Switch (N.C.)
E991	GY	Multi-function Output 3
F420	GN	Indicator - Warning
F711	GN	Engine CAN Datalink 1 (+)
F712	GY	Engine CAN Datalink 1 (-)
F738	WH	Active Ride Control Switch (no)
F739	GN	Active Ride Control Switch (nc)
F748	WH	Ride Control Switch
F846	PU	LED Driver 1
F871	PU	Left Side Steering Jumper
F872	BU	Right Side Steering Jumper
G423	PK	High Pressure Implement Filter 2
G703	GN	Quick Drop Valve
G735	GY	Relay To Solenoid
G750	BU	Transmission Forward Switch
G755	GY	Transmission Reverse Switch
G789	BR	Mode Switch To Pressure Switch
G795	OR	AWS Mode Switch To Rear Steering Switch
G796	YL	AWS Mode Switch To Rear Steering Switch
G848	GN	LED Driver 2
G962	OR	Pilot Cutout Solenoid
H705	BR	Pump Relay
H707	YL	Pump Torque Solenoid
H730	BR	Shuttle Control - Reverse
H731	GY	Shuttle Control - Forward
H764	GY	Steering Position Sensor - Rear
H767	BR	AWS Solenoid Ground 1
H770	BR	AWS Solenoid Ground 4
H771	BR	Sideshift Lock Solenoid
J764	BR	Switch / Sensor Return 1
K764	WH	Stick Extend Solenoid (+)
K766	PK	Stick Retract Solenoid (+)
L745	BR	5v Analog Sensor Return
L998	OR	Auxiliary Hydraulic Solenoid B
L999	GN	Auxiliary Hydraulic Solenoid C
M719	GN	Sideshift Left Switch
M720	BU	Sideshift Left Relay
M721	WH	Sideshift Right Switch
M936	BR	Flow Control Switch
M937	GN	Flow Control Proximity Switch
M952	BU	LH Joystick
M965	GN	RH Joystick
M968	BU	Coupler Switch Interconnect
M969	YL	Coupler Switch Interconnect
N756	PK	Alarm Horn
N939	GN	Ride Control Solenoid 2
N945	OR	Front Brake Solenoid 1
N957	PK	RXD - Comm 1
N960	OR	TXD - Comm 1
N970	YL	DTR - Comm 1
N973	BR	DCD - Comm 1
N979	GN	Signal Ground - Comm 1
N987	WH	PWM - Frequency In 1
P914	GN	Indicator - Transmission Forward
P993	OR	Auxiliary Hydraulics Select
R762	GY	Tractor Mode Select Switch
R763	BU	Scraper Mode Select Switch
R912	OR	Hydraulic Pedal Lock Solenoid
T904	BU	RH Stabilizer Up Solenoid
T907	GN	LH Stabilizer Down Solenoid
T969	YL	Auxiliary Circuit 1
T971	OR	Auxiliary Circuit 3
X750	OR	Forward / Reverse Solenoid Return
X800	OR	8V Sensor Power
X977	YL	Fuel Pump (+)

Component Identifiers (CID[1]) Module Identifier (MID[2]) Machine ECM (MID No. 039)

CID	Component
0041	8 VDC Supply
0168	Electrical System Voltage
0191	Speed Sensor (Transmission Output)
0367	Ride Control Switch
0368	Switch (transmission Auto/Man)
0490	Implement Lockout Switch
0600	Hydraulic Oil Temperature Sensor
0626	Steering / Transmission Lock Switch
0629	Neutralizer Switch
0668	Transmission Shift Lever
0702	Transmission Gear Level Selector Sensor
1037	Display Module
1167	Continuous Flow Switch
1251	Alternator R-Terminal Signal
1401	Transmission Solenoid 1
1402	Transmission Solenoid 2
1403	Transmission Solenoid 3
1404	Transmission Solenoid 4
1405	Transmission Solenoid 5
1406	Transmission Solenoid 6
1482	10 VDC Supply
1529	Quick Coupler Switch
1956	Bucket Cylinder Position Sensor
1957	Stick Cylinder Position Sensor
1958	E-Stick Position Sensor
1959	Boom Cylinder Position Sensor
2108	Swing Position Sensor
2236	E-Stick Extend Solenoid
2237	E-Stick Retract Solenoid
2242	Loader Auxiliary Valve Solenoid 1
2243	Loader Auxiliary Valve Solenoid 2
2244	Hoe Auxiliary Valve Solenoid 1
2245	Hoe Auxiliary Valve Solenoid 2
2529	FWR Joystick Thumbwheel
2530	LH Joystick Thumbwheel
2531	RH Joystick Thumbwheel

[1] The CID is a diagnostic code that indicates which circuit is faulty.
[2] The MID is a diagnostic code that indicates which electronic control module diagnosed the fault.

Failure Mode Identifiers (FMI)[1]

FMI No.	Failure Description
00	Data valid but above normal operational range.
01	Data valid but below normal operational range.
02	Data erratic, intermittent, or incorrect.
03	Voltage above normal or shorted high.
04	Voltage below normal or shorted low.
05	Current below normal or open circuit.
06	Current above normal or grounded circuit.
07	Mechanical system not responding properly.
08	Abnormal frequency, pulse width, or period.
09	Abnormal update.
10	Abnormal rate of change.
11	Failure mode not identifiable
12	Bad device or component.
13	Out of calibration.
14-31	Reserved

[1] The FMI is a diagnostic code that indicates what type of failure has occurred.

Related Electrical Service Manuals

Title	Form Number
Electric Starting Motor: 143-0539	SENR3828
Machine Troubleshooting:	RENR6488
Engine Troubleshooting: 3054E & 3056E	RENR2417

Event Codes Machine ECM

EID	Description
43	Low System Voltage Warning
50	High System Voltage Warning
232	Low Brake Boost Pressure
282	Implement Hydraulic Oil Filter Restricted
360	High Engine Coolant Temperature
361	High Fuel/Water Separator Water Level
391	Low Engine Oil Pressure
627	Machine Driven with Parking Brake On
797	Swing Angle Out of Range
798	High Hydraulic Oil Temperature
878	Brake Fluid Level Low
2114	Air Inlet Restriction

Volume 2 - Connector Location

Connector Number	Schematic Location	Machine Location
CONN 1	E-8	B-12, M-12
CONN 3	E-10	D-14, M-14
CONN 4	G-13	D-14, M-14
CONN 9	B-6	B-13, N-13
CONN 10	E-8	B-13, N-13
CONN 11	C-13	C-12, L-12
CONN 12	C-4	C-9, L-9
CONN 15	G-12	C-12, L-12
CONN 16	I-8	C-12, L-12
CONN 17	A-11	C-12, L-12
CONN 18	C-13	C-12, L-12
CONN 19	I-7	C-9, N-9
CONN 20	E-2	B-13, N-13
CONN 22	I-4	C-10, L-10
CONN 23	A-5	C-12, L-12
CONN 24	B-2	B-9, K-9
CONN 25	C-14	C-12, L-12
CONN 26	D-15	A-15, L-15
CONN 27	E-15	A-15, L-15
CONN 28	A-11	C-10, L-10
CONN 29	C-11	F-12, L-12
CONN 30	A-10	D-2, J-2
CONN 31	I-10	E-6, M-6
CONN 32	B-6, B-8	B-13, N-13
CONN 33	A-1, B-1	B-9, K-9
CONN 34	E-2	D-9, L-9
CONN 35	I-2	E-6, M-6

The connectors shown in this chart are for harness to harness connectors. Connectors that join a harness to a component are generally located at or near the component. See the Component Location Chart.

Volume 1 - Component Location

Component	Schematic Location	Machine Location
Alarm, Backup	E-15	D-15, L-15
Alternator	D-1	D-6, M-6
Battery, HD	E-3	B-9, K-9
Battery, STD	E-3	B-9, K-9
Diode, Machine Security System	I-12	E-6, M-6
Glow Plugs	D-1	B-9, K-9
Horn- Rear	H-15	D-15, L-15
Horn, Forward	F-2	C-5, M-5
Motor, Blower	A-8	B
Motor, Front Washer	H-2	D-9, N-9
Motor, Front Wiper	D-6	D-10, Q-10
Motor, Fuel Lift Pump	D-2	C-9, M-9
Motor, Rear Washer	H-2	D-9, N-9
Motor, Rear Wiper	L-8	D-14, Q-14
Motor, Starter	C-2	C-5, M-5
Reader, MSS Touchkey	I-8	B
Relay, A/C Shutoff	B-4	B
Relay, Crank Interrupt	I-8	B
Relay, Dead Engine Lower Command	G-10	C-10, L-10
Relay, Dead Engine Lower Enable	G-10	C-10, L-10
Relay, Fuel Lift Pump	E-2	C-8, M-8
Relay, High Speed	A-6	B
Relay, LH Steering	E-10	E-13, L-13
Relay, LH/RH Steer Parity	E-10	E-13, L-13
Relay, Quick Connect	B-12	E-11, L-11
Relay, RH Steering	E-10	E-13, L-13
Relay, Solid STAE	H-12	E-6, M-6
Relay, Start	C-2	C-8, M-8
Relay, Start Aid	D-2	C-8, M-8
Resistor, Excitation	D-2	C-9, M-9
Resistor, Motor Speed	A-8	B
Sender, Conv Temperature	G-2	C-8, M-8
Sender, Coolant Temperature	H-2	D-6, M-6
Sender, Fuel Level	G-2	E-9, M-9
Sensor, AWS Position	C-9	E-13, L-13
Sensor, Fuel Water Separator	I-2	D-9, N-9
Solenoid, A/C Compressor Clutch	I-2	D-5, M-5
Solenoid, AWD	F-2	C-9, M-9
Solenoid, Cold Start Adv	E-2	E-6, M-6
Solenoid, Differential Lock	F-2	C-9, M-9
Solenoid, Forward	I-2	C-5, M-5
Solenoid, Fuel Shutoff	E-2	E-6, M-6
Solenoid, Hoe Auxiliary Valve #1	G-15	D-15, L-15
Solenoid, Hoe Auxiliary Valve #2	G-15	D-15, L-15
Solenoid, Hydraulic Torque Limit	G-2	D-12, L-12
Solenoid, Implement Lockout	F-12	D-15, L-15
Solenoid, LH Lock Valve	H-10	B-9, L-9

Component	Schematic Location	Machine Location
Solenoid, Loader Auxiliary Valve #1	G-15	D-15, L-15
Solenoid, Loader Auxiliary Valve #2	G-15	D-15, L-15
Solenoid, Lockout	E-12	L-15, E-15
Solenoid, Pattern Changer #1	H-13	D-13, L-15
Solenoid, Pattern Changer #2	H-15	D-15, L-15
Solenoid, Quick Connect Loader	A-11	D-2, J-2
Solenoid, Reverse	I-2	C-9, M-9
Solenoid, RH Lock Valve	H-10	F-9, L-9
Solenoid, Ride Control #1	B-9	C-9, N-9
Solenoid, Ride Control #2	B-9	C-9, N-9
Solenoid, Side Shift Lock	F-12	D-15, L-15
Suppressor, Circle Steering Arc	D-10	D-13, L-13
Suppressor, Fuel Lift Pump	E-2	C-8, M-8
Suppressor, HVAC	I-2	D-5, M-5
Suppressor, Hydraulic Torque Limit	G-2	D-12, L-12
Suppressor, Implement Lockout	E-12	D-15, L-15
Suppressor, LH Steering Arc	D-10	D-13, L-13
Suppressor, Load Check Disable #1	G-10	B-9, L-9
Suppressor, Load Check Disable #2	G-10	F-9, L-9
Suppressor, Lockout	E-12	L-15, E-15
Suppressor, Pilot Pressure Arc	D-10	D-13, L-13
Suppressor, Quick Coupler 1-6	B-12	E-11, L-11
Suppressor, RH Steering Arc	D-10	D-13, L-13
Suppressor, Ride Control Arc	B-9	C-9, N-9
Suppressor, Side Shift #1	D-12	C-13, L-13
Suppressor, Side Shift #2	D-12	C-13, L-13
Suppressor, Side Shift (Left)	E-12	E-15, L-15
Suppressor, Side Shift (Right)	E-12	E-15, L-15
Suppressor, SS Lock	F-12	D-15, L-15
Switch, A/C Refridgerant Switch	I-1	A
Switch, Air Filter	H-2	A
Switch, AWS Mode Indicator	D-14	A
Switch, AWS Pressure	C-10	B
Switch, Boosted Brake Pressure #1	F-13	D-13, L-15
Switch, Broom Angle	A-15	A
Switch, Cont Flow	B-15	A
Switch, Coolant Temperature	H-2	D-10, Q-10
Switch, Electrical External Power	A-14	A
Switch, Engine Oil Pressure	G-2	E-10, D-10
Switch, Float Detent Limit	H-10	C-9, N-9
Switch, Heater A/C	B-8	B
Switch, Loader Quick Connect Pins	B-14	A
Switch, Ride Control Pressure	B-9	C-9, N-9
Switch, Thermostat	A-8	B
Valve, AWS	C9	E-13, L-13
Valve, Machine Security	I-12	E-6, M-6
Valve, Side Shift	F-12	E-15, L-15

Machine Locations Are Repeated For Components Located Close Together.
A = Located Inside Of Front Console.
B = Located Inside Of Side Console.
C = Located Around Fuse Block.

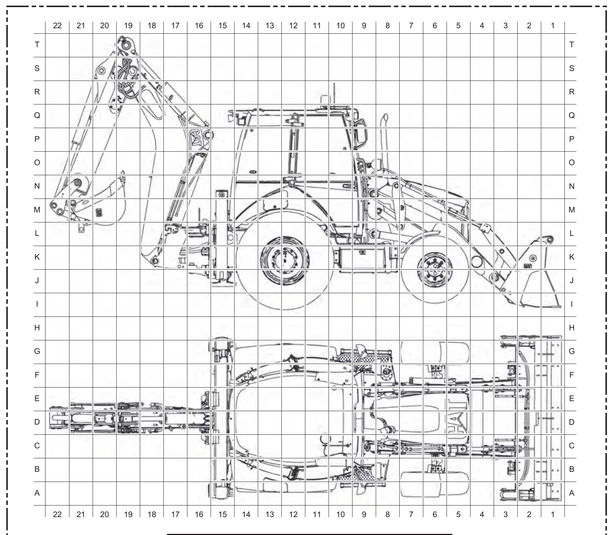

Machine Connector & Component Locations

Volume 2 - Resistor, Sender and Solenoid Specifications

Part No.	Component Description	Resistance (Ohms)[1]
185-4254	Solenoid: Loader Auxiliary Valve 1 & 2, Hoe Auxiliary Valve 1 & 2	2.2 ± 0.2
212-3350	Solenoid: Quick Coupler Loader, Pattern Changer 1 & 2	3.2
214-4302	Solenoid: A/C Compressor Clutch	3.2
220-3398	Solenoid: Implement Lockout	8 ± 0.5
223-4942	Sender: Fuel Level	Empty: 240 - 250 Full: 28 - 33
238-4628	Solenoid: Ride Control 1 & 2	7.3
238-5597	Resistor: Excitation	120 ± 6
244-3106	Sender: Coolant Temperature	54°C (130°F) - 560 to 716 110°C (230°F) - 72 to 82
249-7160	Solenoid: Left Side Shift, Right Side Shift	10.3 ± 0.6
273-3525	Solenoid: Lockout	7.3
274-8034	Solenoid: AWS, Differential Lock	8.8
4W-9972	Sender: Conv. Temperature	54 C (130 F) - 560 to 716 110°C (230°F) - 72 to 82

[1] At room temperature unless otherwise noted.

Volume 2 - Off Machine Switch Specification

Part No.	Function	Actuate	Deactuate	Contact Position
119-9631	Thermostat Switch	-0.6 ± 1.4°C (31 ± 2.5°F)	4.2 ± 1.4°C (39.5 ± 2.5°F)	Normally Closed
128-5091	AWS Pressure Switch	551 kPa Max (80 psi)	344 ± 20 kPa (50 ± 3 psi)	Normally Open[2]
194-2553	Float Detent Pressure	2200 kPa Max (319.1 psi)	1800 ± 175 kPa (261.1 ± 25.4 psi)	Normally Closed
236-6923	A/C Refridgerent Switch	275 kPa MAX[1] (40 psi)	170 ± 55 kPa (24.6 ± 8 psi)	Normally Open[2]
304-5696	Ride Control Pressure	3500 kPa Max (508 psi)	3137 ± 175 kPa (455 ± 25 psi)	Normally Closed

[1] With increasing pressure the closed condition can be maintained up to 2800 kpa (405 psi), with decreasing pressure the closed condition can be maintained down to 170 kpa (25psi).

[2] Contact position at the contacts of the harness connector.

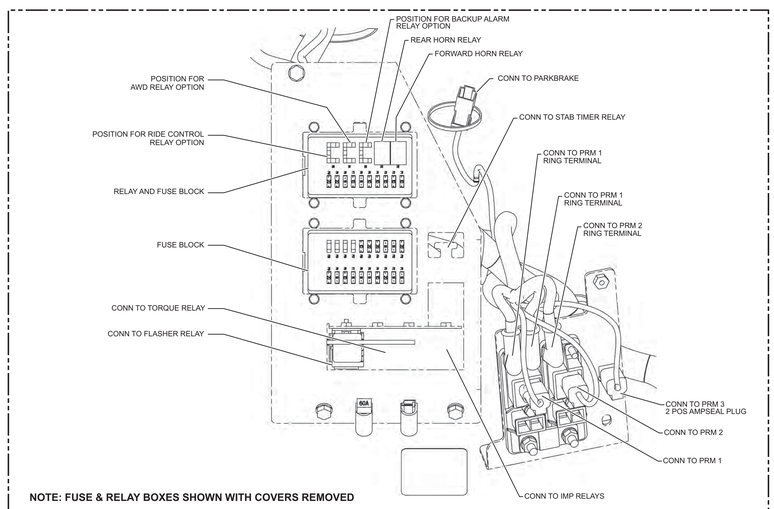

NOTE: FUSE & RELAY BOXES SHOWN WITH COVERS REMOVED

FRONT VIEW OF FUSE AND PRM BRACKET

KENR8229 VOL 2 of 2

36 Page, Color 2, (Dimensions: 48 inches x 35 inches)

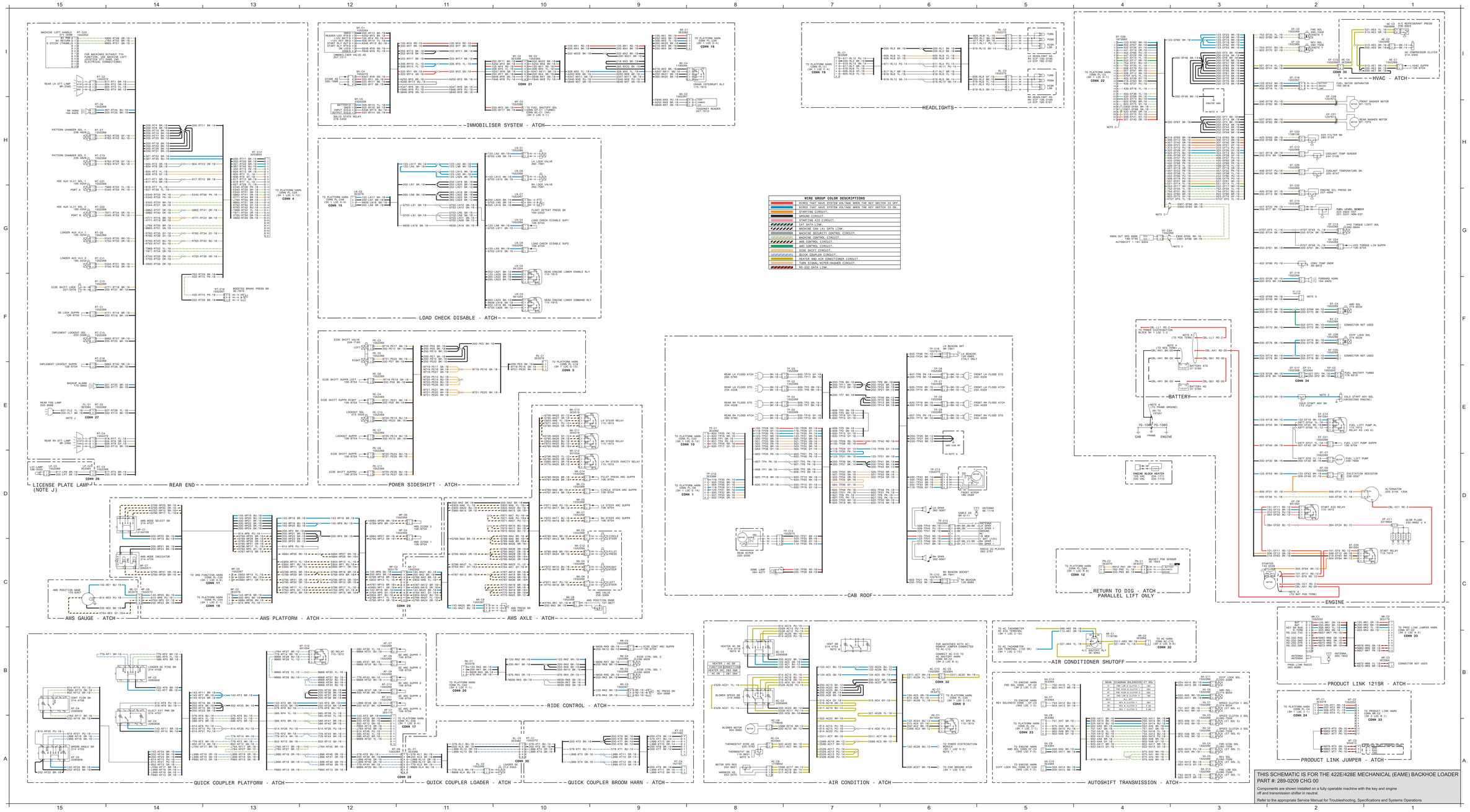

THIS SCHEMATIC IS FOR THE 422E/428E MECHANICAL (EAME) BACKHOE LOADER PART #: 289-0209 CHG 00

Components are shown installed on a fully operable machine with the key and engine off and transmission shifter in neutral.

Refer to the appropriate Service Manual for Troubleshooting, Specifications and Systems Operations

COLOR ABBREVIATIONS	
ABBREV	COLOR
RD	RED
WH	WHITE
OR	ORANGE
YL	YELLOW
PK	PINK
BK	BLACK
GY	GRAY
PU	PURPLE
BR	BROWN
GN	GREEN
BU	BLUE

SYMBOL	DESCRIPTION
	CIRCUIT CONNECTED
	CIRCUIT NOT CONNECTED
	ELECTRICAL CONNECTION TO MACHINE STRUCTURE
	INTERNAL ELECTRICAL CONNECTION WITHIN COMPONENT
10+	CONNECTOR
HM	CIRCUIT GROUPING DESIGNATION
-----	ATCH WIRE, CABLE, COMPONENT
HH	CIRCUIT CONNECTED
	BLADE, SPADE, RING OR SCREW TERMINAL
•	SPLICE

IDENT	PART NO.	CHG	LOC	NOTE	DESCRIPTION
					HARNESS AC
AC	213-6055	04	SH 2	B-8	✓ HVAC - CONSOLE
AE	238-7492	03	SH 2	I-1	✓ HVAC AIR CONDITION - ENGINE
AR	202-9168	01	SH 2	B-4	✓ AIR CONDITION SHUTOFF
BC	213-6054	04	SH 2	B-8	✓ HVAC - DELUXE CAB
EH	263-9484	01	SH 1	G-2	✓ ENGINE CAB
EF	178-8465	01	SH 2	E-2	✓ FUEL SHUTOFF KRM AS - TURBO ENGINE
FL	232-1534	01	SH 2	I-15	✓ REAR FOG LAMP
HE	225-7988	01	SH 1	G-13	✓ REAR AUX (HORN)
KC	213-6057	04	SH 2	A-11	✓ QUICK COUPLER - PLATFORM
KL	213-6077	04	SH 2	A-11	✓ QUICK COUPLER - LOADER
KT	211-9461	04	SH 2	A-10	✓ QUICK COUPLER - BROOM
LN	213-6064	02	SH 2	G-12	✓ LOAD CHECK DISABLE (PLATFORM)
LP	213-6084	02	SH 2	D-15	LICENSE PLATE
MH	295-5893	01	SH 2	I-10	✓ MACHINE IMMOBILISER
MY	257-7314	03	SH 2	I-11	✓ MACHINE IMMOBILISER CONTROL
PC	213-6056	04	SH 2	A-10	✓ PARALLEL LIFT - PLATFORM
PN	235-7969	04	SH 1	E-9	✓ AUTOSHIFT KRM
PL	295-1712	03	SH 1	H-2	PLATFORM
PW	246-8047	02	SH 2	B-4	RETURN TO DIG - PARALLEL LIFT
RH	295-7755	02	SH 1	C-12	CONSOLE - SIDE
RC	213-6067	03	SH 2	I-8	✓ REAR CONSOLE
RL	213-6047	03	SH 2	I-8	REMOVING LIGHT
RT	295-1721	03	SH 2	G-13	REAR END SIDESHIFT
TP	295-1723	03	SH 2	D-7	CAB ROOF
WA	213-6063	06	SH 2	J-2	✓ AWS - AXLE
WH	295-5347	03	SH 2	C-13	✓ AWS - HOSE
WP	295-5877	03	SH 2	C-13	✓ AWS - PLATFORM
WR	246-8059	02	SH 2	H-2	✓ PRODUCT LINK - RADIO - 321SR
WT	295-5891	02	SH 2	A-2	✓ PRODUCT LINK JUMPER
XA	246-8052	03	SH 2	H-5	✓ AUTOSHIFT HARN - SOL
					CABLE AC
AX	246-8053	07	SH 2	F-3	H POS (BAT TO STARTER)
AA	225-5068	03	SH 2	F-3	H POS (BAT TO STARTER)(EST)
CC	246-8058	02	SH 2	C-2	H POS (STARTER TO ALTERNATOR)
GG	213-6061	02	SH 2	F-3	H POS (HE)
GG	225-5062	00	SH 2	F-3	H POS (HE)(EST)
HH	225-5063	00	SH 2	F-3	H NEG (HE)
HH	225-5065	00	SH 2	F-3	H NEG (HE)(EST)
KK	225-5066	00	SH 2	F-3	H NEG
LL	213-6069	06	SH 2	F-3	H POWER DISTRIBUTION
LL	225-5060	02	SH 2	F-3	H POWER DISTRIBUTION (EST)
					STRAP AC
-	70-1060	00	SH 2	E-4	STRAP-GROUND CAB TO FRAME
-	71-3885	00	SH 2	E-4	STRAP-GROUND ENGINE TO FRAME

NOTE LOC	NOTE DESCRIPTION
VARIOUS	NOTE A: ASSEMBLE TERMINALS TO DESIGNATED STUD
SH 1 I-2	NOTE B: 2-BLOCK BUSBAR WITH OFFSET FOR MACHINES WITH HVAC OPTION
VARIOUS	NOTE C: WIRES ARE TWISTED. ONE TWIST PER 25mm. WIRES TO BE TWISTED ARE: 892-BR AND 893-GN; F711-GN AND F712-GY; E900-RH AND E901-GN
SHT 2 F-2	NOTE D: NOT USED ON PILOT MACHINE.
SH 1 H-9	NOTE E: CLOSED WHEN BRAKE IS DEPRESSED.
SH 1 A-4	NOTE F: WHEN WSS IS INSTALLED, REMOVE JUMPER AND CONNECT PL-C39 TO WX-C1.
SH 1 B-14	NOTE G: OPTION BASED ON MACHINE CONFIGURATION.
VARIOUS	NOTE H: OPTION - ALTERNATIVE BASED ON MACHINE CONFIGURATION.
VARIOUS	NOTE J: ATTACHMENT
SH 1 A-4	NOTE K: WHEN LOAD CHECK IS INSTALLED, REMOVE JUMPER AND CONNECT PL-C46 TO LN-C2
SH 1 D-15 SH 2 C-14	NOTE L: STD FRONT AND REAR WORK LIGHT SWITCHES ARE FOR THE 4-LIGHT ARRANGEMENTS. ATCH FRONT AND REAR WORK LIGHT SWITCHES ARE FOR THE 8-LIGHT ARRANGEMENTS.
SH 2 B-7 SH 2 B-8	NOTE M: WHEN USING A CAB WITH HEATER ONLY, HEATER AC SH IS REPLACED WITH VENT SH.
SH 2 A-8	NOTE N: NORMALLY CLOSED AT PROPER REFRIGERANT CHARGE
SH 1 G-8	NOTE P: FOR MACHINES WITHOUT LOADER LOCKS
SH 1 I-8	NOTE R: FOR ITALY MACHINES ONLY, ADD JUMPER AS. TO CONN PL-C62
SH 1 H-2 SH 2 A-6	NOTE T: FOR HVAC OPTION, CONNECT 122-BU-12 FROM HVAC HARN TO POWER MODULE SB STUD.
SH 1 I-2	NOTE U: 2-BLOCK BUSBAR FOR MACHINES WITHOUT HVAC
SH 1 G-7	NOTE V: FOR MACHINES WITH LOADER LOCKS
SH 1 D-14	NOTE W: FOR POWER SIDESHIFT OPTION, REPLACE SS LOCK SW WITH POWER SS SW.
SH 1 H-8	NOTE X: FOR ITALY MACHINES, REPLACE AWD SHUTOFF WITH AWD ITALY SWITCH
SH 1 F-1 SH 2 I-2	NOTE Y: MANUAL TRANSMISSION ONLY
SH 2 E-2	NOTE Z: CONNECTION SUPPLIED WITH ENGINE