SEN00596-02

Shop Manual

BULLDOZER

GALEO

D155AX-6

SERIAL NUMBERS D155AX-80001 and up

KOMATSU

BULLDOZER

D155AX-6

Machine model	Serial number
D155AX-6	80001 and up

00 Index and foreword

Index

Organization list of the shop manual 2
Table of contents 4

Organization list of the shop manual

The contents of this shop manual are shown together with Form No. in a list.

Note 1: Always keep the latest version of this manual in accordance with this list and utilize accordingly.
The marks shown to the right of Form No. denote the following:
○: New issue (to be filed additionally) ●: Revision (to be replaced for each Form No.)

Note 2: This shop manual can be supplied for each Form No.

Note 3: To file this shop manual in the special binder for management, handle it as follows:
- Place a divider on the top of each section in the file after matching the Tub No. with No. indicated next to each Section Name shown in the table below:
- File overview and other materials in sections in the order shown below and utilize them accordingly.

Section Title	Form Number	
Shop Manual, contents binder, binder label and tabs	SEN00596-02	
00 Index and foreword	SEN00597-02	
Index	SEN00598-02	●
Foreword and general information	SEN00599-00	
01 Specification	SEN00600-00	
Specification and technical data	SEN00601-00	
10 Structure, function and maintenance standard	SEN00602-00	
Engine and cooling system	SEN00603-00	
Power train system, Part 1	SEN00604-00	
Power train system, Part 2	SEN00605-00	
Undercarriage and frame	SEN00606-00	
Hydraulic system	SEN00607-00	
Work equipment	SEN00608-00	
Cab and its attachments	SEN00609-00	
Electrical system	SEN00610-00	
20 Standard value table	SEN00611-01	
Standard service value table	SEN00678-01	●
30 Testing and adjusting	SEN00612-01	
Testing and adjusting, Part 1	SEN00679-01	●
Testing and adjusting, Part 2	SEN00680-01	●
Testing and adjusting, Part 3	SEN00681-01	●
Testing and adjusting, Part 4	SEN00682-01	●
40 Troubleshooting	SEN00613-01	
General information on troubleshooting	SEN00851-00	
Troubleshooting by failure and error codes, Part 1	SEN00716-01	●
Troubleshooting by failure and error codes, Part 2	SEN00717-01	●
Troubleshooting by failure and error codes, Part 3	SEN00718-01	●
Troubleshooting by failure and error codes, Part 4	SEN00719-01	●
Troubleshooting by failure and error codes, Part 5	SEN00720-01	●
Troubleshooting by failure and error codes, Part 6	SEN00721-01	●

Troubleshooting by failure and error codes, Part 7	SEN00722-01	●
Troubleshooting by failure and error codes, Part 8	SEN00723-01	●
Troubleshooting of electrical system (E-mode)	SEN00807-01	●
Troubleshooting of hydraulic and mechanical system (H-mode)	SEN00808-00	
Troubleshooting of engine (S-mode)	SEN00852-01	●
50 Disassembly and assembly	SEN00614-00	
General information on disassembly and assembly	SEN01204-00	○
Engine and cooling system	SEN01205-00	○
Power train, Part 1	SEN01206-00	○
90 Diagrams and drawings	SEN00615-02	
Hydraulic circuit diagram	SEN00616-01	●
Electrical circuit diagram	SEN00617-02	●

Table of contents

00 Index and foreword
Index SEN00598-02
Organization list of the shop manual ... 2
Table of contents ... 4

Foreword and general information SEN00599-00
Foreword and general information ... 2
Safety notice ... 2
How to read the shop manual ... 6
Explanation of terms for maintenance standard ... 8
Handling electric equipment and hydraulic component ... 10
How to read electric wire code ... 18
Method of disassembling and connecting push-pull type coupler ... 21
Standard tightening torque table ... 24
Conversion table ... 28

01 Specification
Specification and technical data SEN00601-00
Specification and technical data ... 2
Specification dimension drawings ... 2
Specifications ... 3
Weight table ... 9
Table of fuel, coolant and lubricants ... 12

10 Structure, function and maintenance standard
Engine and cooling system SEN00603-00
Engine and cooling system ... 2
Radiator, oil cooler ... 2
Engine mount ... 5
Cooling fan pump ... 6
Cooling fan motor ... 14
Power train system, Part 1 SEN00604-00
Power train system, Part 1 ... 2
Power train skeleton ... 2
Overall drawing of power train unit ... 4
Power train hydraulic piping drawing ... 6
Damper, universal joint ... 8
Torque converter, PTO ... 10
Torque converter control valve ... 19
Lockup clutch ECMV, stator clutch ECMV ... 20
Transmission control ... 26
Transmission ... 28
Transmission ECMV ... 40
Main relief valve and torque converter relief valve ... 46
Lubrication relief valve ... 48
Scavenging pump ... 49
Power train and steering lubrication pump ... 50
Power train system, Part 2 SEN00605-00
Power train system, Part 2 ... 2
HSS system ... 2
HSS motor ... 4
Hydraulic, HSS pump ... 14
Hydraulic oil cooler bypass valve ... 37
Steering, brake control ... 38

Steering unit ... 40
Brake control valve ... 56
Brake ECMV ... 58
Parking brake solenoid valve ... 63
Sudden stop prevention valve ... 65
Final drive ... 67
Sprocket ... 71
Undercarriage and frame SEN00606-00
Undercarriage and frame ... 2
Track frame ... 2
Recoil spring ... 4
Idler ... 6
Track roller ... 8
Carrier roller ... 10
Track shoe ... 12
Main frame ... 18
Suspension ... 20
Hydraulic system SEN00607-00
Hydraulic system ... 2
Work equipment hydraulic piping diagram ... 2
Work equipment control piping diagram ... 5
Work equipment control ... 6
Hydraulic tank and filter ... 8
Accumulator ... 10
PCCS lever ... 11
Work equipment lock valve ... 15
Control valve ... 16
Work equipment cylinder ... 52
Piston valve ... 54
Quick drop valve ... 56
Self pressure reducing valve ... 61
Work equipment SEN00608-00
Work equipment ... 2
Cylinder stay ... 2
Blade ... 4
Cutting edge, end bit ... 6
Ripper ... 8
Cab and its attachments SEN00609-00
Cab and its attachments ... 2
Cab mount + ROPS pin ... 2
ROPS cab ... 3
Air conditioner ... 4
Electrical system SEN00610-00
Electrical system ... 2
Engine control ... 2
Engine control system ... 3
Deceleration potentiometer ... 4
Monitor system ... 5
Sensors ... 23
Palm command control system ... 26

20 Standard value table
Standard service value table SEN00678-01
Standard value table for engine ... 2
Standard value table for engine ... 2
Standard value table for machine ... 3

30 Testing and adjusting
Testing and adjusting, Part 1 SEN00679-01
Testing and adjusting, Part 1 ... 3
Tools for testing, adjusting, and troubleshooting ... 3
Measuring engine speed ... 5
Measuring intake air pressure (boost pressure) ... 7
Measuring exhaust temperature ... 8
Measuring exhaust gas color ... 10
Adjusting valve clearance ... 11
Measuring compression pressure ... 12
Measuring blow-by pressure ... 14
Measuring engine oil pressure ... 15
Handling fuel system parts ... 16
Releasing residual pressure from fuel system ... 16
Measuring fuel pressure ... 17
Measuring fuel return rate and fuel leakage ... 18
Bleeding air from fuel circuit ... 22
Measuring fuel circuit for leakage ... 24
Testing and adjusting alternator belt tension ... 25
Testing and adjusting air conditioner compressor belt tension ... 26
Measuring fan speed ... 27
Measuring fan circuit oil pressure ... 28
Bleeding air from fan pump ... 29
Adjusting fuel control dial and decelerator pedal ... 30
Testing and adjusting, Part 2 SEN00680-01
Testing and adjusting, Part 2 ... 3
Measuring power train oil pressure ... 3
Adjusting transmission output shaft speed sensor ... 11
Simple test procedure for brake performance ... 12
Adjusting brake pedal ... 13
Adjusting parking brake lever ... 15
Emergency escape method when power train has trouble ... 17
Adjusting idler clearance ... 20
Testing and adjusting track shoe tension ... 21
Measuring and adjusting work equipment and HSS oil pressure ... 22
Measuring control circuit basic pressure ... 26
Measuring work equipment lock solenoid valve output pressure ... 27
Emergency operation method when work equipment has trouble ... 28
Measuring ripper pin puller solenoid valve output pressure ... 30
Testing parts which cause hydraulic drift of blade and ripper ... 31
Measuring internal leakage of work equipment cylinder ... 32
Releasing residual pressure from work equipment cylinder ... 33
Bleeding air from work equipment cylinder ... 33
Adjusting work equipment lock lever ... 34
Adjusting blade ... 35
Adjusting operator's cab ... 37
Testing and adjusting, Part 3 SEN00681-01
Testing and adjusting, Part 3 ... 2
Special functions of machine monitor (EMMS) ... 2
Testing and adjusting, Part 4 SEN00682-01
Testing and adjusting, Part 4 ... 2
Handling of power supply circuit of engine controller ... 2
Preparation work for troubleshooting of electrical system ... 3
Pm Clinic ... 5

40 Troubleshooting
General information on troubleshooting SEN00851-00
General information on troubleshooting 2
Points to remember when troubleshooting 2
Sequence of events in troubleshooting 3
Check before troubleshooting 4
Classification and procedures for troubleshooting 5
Connector pin Nos. and connection table 8
T-boxes and T-adapters table 31
Troubleshooting by failure and error codes, Part 1 SEN00716-01
Troubleshooting by failure and error codes, Part 1 3
Failure codes table 3
Before carrying out troubleshooting when failure code is displayed 10
Information in troubleshooting table 14
Failure code [1500L0] Transmission clutch: Abnormal 16
Failure code [15SAL1] Forward clutch: Fill high 17
Failure code [15SALH] Forward clutch: Fill low 18
Failure code [15SBL1] Reverse clutch: Fill high 19
Failure code [15SBLH] Reverse clutch: Fill low 20
Failure code [15SEL1] Speed 1st clutch: Fill high 21
Failure code [15SELH] Speed 1st clutch: Fill low 22
Failure code [15SFL1] Speed 2nd clutch: Fill high 23
Failure code [15SFLH] Speed 2nd clutch: Fill low 24
Failure code [15SGL1] Speed 3rd clutch: Fill high 25
Failure code [15SGLH] Speed 3rd clutch: Fill low 26
Failure code [15SJL1] L/U: Fill high 28
Failure code [15SJLH] L/U: Fill low 30
Failure code [2301L1] Right brake: Fill high 32
Failure code [2301LH] Right brake: Fill low 33
Failure code [2302L1] Left brake: Fill high 34
Failure code [2302LH] Left brake: Fill low 35
Failure code [7RFAKA] ECM HOLD RELAY: Disconnection 36
Failure code [AA10NX] Air Cleaner Clogging 38
Failure code [AB00MA] Battery Charge Abnormal 40
Failure code [B@BAZG] Eng Oil PressLow 42
Failure code [B@BCNS] Eng Water Overheat 42
Failure code [B@BCZK] Eng Water Level Low 43
Failure code [B@CENS] T/C Oil Overheat 43
Failure code [B@HANS] Hyd Oil Overheat 44
Troubleshooting by failure and error codes, Part 2 SEN00717-01
Troubleshooting by failure and error codes, Part 2 4
Failure code [CA111] EMC Critical Internal Failure 4
Failure code [CA115] Eng Ne and Bkup Speed Sens Error 6
Failure code [CA122] Chg Air Press Sensor High Error 8
Failure code [CA123] Chg Air Press Sensor Low Error 10
Failure code [CA131] Throttle Sensor High Error 12
Failure code [CA132] Throttle Sensor Low Error 14
Failure code [CA135] Eng Oil Press Sensor High Error 16
Failure code [CA141] Eng Oil Press Sensor Low Error 18
Failure code [CA144] Coolant Temp Sens High Error 20
Failure code [CA145] Coolant Temp Sens Low Error 22
Failure code [CA153] Chg Air Temp Sensor High Error 24
Failure code [CA154] Chg Air Temp Sensor Low Error 26
Failure code [CA187] Sens Supply 2 Volt Low Error 26
Failure code [CA221] Ambient Press Sens High Error 28
Failure code [CA222] Ambient Press Sens Low Error 30
Failure code [CA227] Sens Supply 2 Volt High Error 32

Failure code [CA234] Eng Overspeed ... 34
Failure code [CA238] Ne Speed Sens Supply Volt Error ... 36
Failure code [CA263] Fuel Temp Sensor High Error ... 38
Failure code [CA265] Fuel Temp Sensor Low Error ... 39
Failure code [CA271] PCV1 Short Error ... 40
Failure code [CA272] PCV1 Open Error ... 41
Failure code [CA273] PCV2 Short Error ... 42
Failure code [CA274] PCV2 Open Error ... 43
Failure code [CA322] Inj #1 (L#1) Open/Short Error ... 44
Failure code [CA323] Inj #5 (L#5) Open/Short Error ... 45
Failure code [CA324] Inj #3 (L#3) Open/Short Error ... 46
Failure code [CA325] Inj #6 (L#6) Open/Short Error ... 47
Failure code [CA331] Inj #2 (L#2) Open/Short Error ... 48
Failure code [CA332] Inj #4 (L#4) Open/Short Error ... 49
Failure code [CA342] Calibration Code Incompatibility ... 50
Failure code [CA351] Injectors Drive Circuit Error ... 52
Failure code [CA352] Sens Supply 1 Volt Low Error ... 54
Failure code [CA386] Sens Supply 1 Volt High Error ... 56
Failure code [CA441] Battery Voltage Low Error ... 58
Failure code [CA442] Battery Voltage High Error ... 58
Failure code [CA449] Rail Press Very High Error ... 59
Failure code [CA451] Rail Press Sensor High Error ... 60
Failure code [CA452] Rail Press Sensor Low Error ... 62
Failure code [CA553] Rail Press High Error ... 62
Failure code [CA554] Rail Press Sensor In Range Error ... 63
Failure code [CA559] Rail Press Low Error ... 64
Failure code [CA689] Eng Ne Speed Sensor Error ... 68
Troubleshooting by failure and error codes, Part 3 SEN00718-01
Troubleshooting by failure and error codes, Part 3 ... 3
Failure code [CA731] Eng Bkup Speed Sens Phase Error ... 3
Failure code [CA757] All Continuous Data Lost Error ... 3
Failure code [CA778] Eng Bkup Speed Sensor Error ... 4
Failure code [CA1228] EGR Valve Servo Error 1 ... 6
Failure code [CA1625] EGR Valve Servo Error 2 ... 7
Failure code [CA1626] BP Valve Sol Current High Error ... 8
Failure code [CA1627] BP Valve Sol Current Low Error ... 10
Failure code [CA1628] Bypass Valve Servo Error 1 ... 11
Failure code [CA1619] Bypass Valve Servo Error 2 ... 12
Failure code [CA1631] BP Valve Pos Sens High Error ... 14
Failure code [CA1632] BP Valve Pos Sens Low Error ... 16
Failure code [CA1633] KOMNET Datalink Timeout Error ... 18
Failure code [CA1642] EGR Inlet Press Sens Low Error ... 20
Failure code [CA1653] EGR Inlet Press Sens High Error ... 22
Failure code [CA2185] Throt Sens Sup Volt High Error ... 24
Failure code [CA2186] Throt Sens Sup Volt Low Error ... 26
Failure code [CA2249] Rail Press Very Low Error ... 26
Failure code [CA2271] EGR Valve Pos Sens High Error ... 28
Failure code [CA2272] EGR Valve Pos Sens Low Error ... 30
Failure code [CA2351] EGR Valve Sol Current High Error ... 32
Failure code [CA2352] EGR Valve Sol Current Low Error ... 34
Failure code [CA2555] Grid Htr Relay Volt Low Error ... 35
Failure code [CA2556] Grid Htr Relay Volt High Error ... 36
Failure code [D110KA] Battery relay: Disconnection ... 38
Failure code [D110KB] Battery Relay: Drive Short Circuit ... 40
Failure code [D130KA] Neutral relay: Disconnection ... 42
Failure code [D130KB] Neutral relay: Short circuit ... 44
Failure code [D161KA] Back-up alarm relay: Disconnection ... 46
Failure code [D161KB] Back-up alarm relay: Short circuit ... 48

Failure code [D190KA] ACC signal relay: Disconnection ... 50
Failure code [D190KB] ACC signal relay: Short circuit ... 52
Failure code [D5ZKKX] Throttle Dial: Out of normal range ... 54
Failure code [DAFRKR] CAN Disconnection (Monitor) ... 56
Failure code [DB2RKR] CAN Disconnection (Engine controller) ... 58
Failure code [DB90KK] WE controller: Source voltage reduction ... 60
Failure code [DB90KR] PT controller: Can communication lost ... 62
Troubleshooting by failure and error codes, Part 4 SEN00719-01
Troubleshooting by failure and error codes, Part 4 ... 3
Failure code [DB90KT] WE controller: Abnormality in controller ... 3
Failure code [DB95KK] WE controller: Source voltage reduction ... 4
Failure code [DB97KK] WE controller: Source voltage reduction ... 6
Failure code [DB99KQ] WE controller: Type select signal ... 8
Failure code [DB9RKR] WE controller: Can communication lost ... 10
Failure code [DBE0KK] PT controller: Source voltage reduction ... 12
Failure code [DBE0KT] PT controller: Abnormality in controller ... 14
Failure code [DBE6KK] PT controller: Source voltage reduction ... 16
Failure code [DBE7KK] PT controller: Source voltage reduction ... 18
Failure code [DBE9KQ] PT controller: Type select signal ... 20
Failure code [DD12KA] Shift up Sw: Disconnection ... 22
Failure code [DD12KB] Shift up Sw: Short circuit ... 24
Failure code [DD13KA] Shift down Sw: Disconnection ... 26
Failure code [DD13KB] Shift down Sw: Short circuit ... 28
Failure code [DD14KA] Parking lever Sw: Disconnection ... 30
Failure code [DD14KB] Parking lever Sw: Short circuit ... 32
Failure code [DDDDKA] Back up brake Sw: Disconnection ... 34
Failure code [DDDDKB] Back up brake Sw: Short circuit ... 36
Failure code [DDDDKX] Back up brake Sw: Signal mismatch ... 38
Failure code [DDN7KA] WEQ Knob Sw (down): Disconnection ... 40
Failure code [DDN7KB] WEQ Knob Sw (down): Short circuit ... 42
Failure code [DDN9KA] WEQ Knob Sw (up): Disconnection ... 44
Failure code [DDN9KB] WEQ Knob Sw (up): Short circuit ... 46
Failure code [DDNLKA] Weq lock Sw: Disconnection ... 48
Failure code [DDNLKB] Weq lock Sw: Short circuit ... 50
Failure code [DDTSL1] S/C: Fill high ... 52
Failure code [DDTSLH] S/C: Fill low ... 54
Troubleshooting by failure and error codes, Part 5 SEN00720-01
Troubleshooting by failure and error codes, Part 5 ... 3
Failure code [DFA4KX] BL lever 1: Out of normal range ... 3
Failure code [DFA4KZ] BL lever: Disconnection or short circuit ... 3
Failure code [DFA4L8] BL lever: Signal mismatch ... 4
Failure code [DFA5KA] BL lever 1: Disconnection ... 6
Failure code [DFA5KB] BL lever 1: Short circuit ... 8
Failure code [DFA6KA] BL lever 2: Disconnection ... 10
Failure code [DFA6KB] BL lever 2: Short circuit ... 12
Failure code [DFA7KX] BT lever 1: Out of normal range ... 14
Failure code [DFA7KZ] BT lever: Disconnection or short circuit ... 14
Failure code [DFA7L8] BT lever: Signal mismatch ... 15
Failure code [DFA8KA] BT lever 1: Disconnection ... 16
Failure code [DFA8KB] BT lever 1: Short circuit ... 18
Failure code [DFA9KA] BT lever 2: Disconnection ... 20
Failure code [DFA9KB] BT lever 2: Short circuit ... 22
Failure code [DFAAKX] RL lever 1: Out of normal range ... 24
Failure code [DFAAKZ] RL lever: Disconnection or short circuit ... 24
Failure code [DFAAL8] RL lever: Signal mismatch ... 25
Failure code [DFABKA] RL lever 1: Disconnection ... 26
Failure code [DFABKB] RL lever 1: Short circuit ... 28

Failure code [DFACKA] RL lever 2: Disconnection ... 30
Failure code [DFACKB] RL lever 2: Short circuit ... 32
Failure code [DFADKX] RL lever 1: Out of normal range ... 34
Failure code [DFADKZ] RL lever: Disconnection or short circuit ... 34
Failure code [DFADL8] RL lever: Signal mismatch ... 35
Failure code [DFAEKA] RL lever 1: Disconnection ... 36
Failure code [DFAEKB] RL lever 1: Short circuit ... 38
Failure code [DFAFKA] RL lever 2: Disconnection ... 40
Failure code [DFAFKB] RL lever 2: Short circuit ... 42
Failure code [DGT1KA] T/C oil temp sensor: Abnormal ... 44
Failure code [DGT1KX] T/C oil temp sensor: Abnormal ... 46
Failure code [DH21KA] Weq pressure sensor: Disconnection ... 48
Failure code [DH21KB] Weq pressure sensor: Short circuit ... 50
Failure code [DHT5KA] T/C in-pressure sensor: Disconnection ... 52
Failure code [DHT5KB] T/C in-pressure sensor: Short circuit ... 54
Failure code [DHT7KA] T/C out-pressure sensor: Disconnection ... 56
Failure code [DHT7KB] T/C out-pressure sensor: Short circuit ... 58
Failure code [DK10KX] Fuel control Dial: Out of normal range ... 60
Troubleshooting by failure and error codes, Part 6 SEN00721-01
Troubleshooting by failure and error codes, Part 6 ... 4
Failure code [DK30KA] ST lever 1: Disconnection ... 4
Failure code [DK30KB] ST lever 1: Short circuit ... 6
Failure code [DK30KX] ST lever 1: Out of normal range ... 8
Failure code [DK30KZ] RL lever: Disconnection or short circuit ... 8
Failure code [DK30L8] ST lever: Signal mismatch ... 9
Failure code [DK31KA] ST lever 2: Disconnection ... 10
Failure code [DK31KB] ST lever 2: Short circuit ... 12
Failure code [DK40KA] Brake potentiometer: Disconnection ... 14
Failure code [DK40KB] Brake potentiometer: Short circuit ... 16
Failure code [DK55KX] FR lever: Out of normal range ... 18
Failure code [DK55KZ] FR lever: Disconnection or short circuit ... 18
Failure code [DK55L8] FR lever: Signal mismatch ... 19
Failure code [DK56KA] FR lever 1: Disconnection ... 20
Failure code [DK56KB] FR lever 1: Short circuit ... 22
Failure code [DK57KA] FR lever 2: Disconnection ... 24
Failure code [DK57KB] FR lever 2: Short circuit ... 26
Failure code [DKH1KA] Pitch angle sensor: Disconnection ... 28
Failure code [DKH1KB] Pitch angle sensor: Short circuit ... 30
Failure code [DLT3KA] T/M out-speed sensor: Disconnection ... 32
Failure code [DLT3KB] T/M out-speed sensor: Abnormal ... 33
Failure code [DW7BKA] Fan rev EPC: Disconnection ... 34
Failure code [DW7BKB] Fan rev EPC: Short circuit ... 35
Failure code [DWN1KA] Hss EPC1: Disconnection ... 36
Failure code [DWN1KB] Hss EPC1: Short circuit ... 37
Failure code [DWN1KY] Hss EPC1: Short circuit ... 38
Failure code [DWN2KA] Hss EPC2: Disconnection ... 39
Failure code [DWN2KB] Hss EPC2: Short circuit ... 40
Failure code [DWN2KY] Hss EPC2: Short circuit ... 41
Failure code [DWN3KA] Ssp solenoid: Disconnection ... 42
Failure code [DWN3KB] Ssp solenoid: Short circuit ... 44
Failure code [DWN3KY] Ssp solenoid: Short circuit ... 46
Failure code [DWN5KA] Fan pump solenoid: Disconnection ... 48
Failure code [DWN5KB] Fan pump solenoid: Short circuit ... 49
Failure code [DXA0KA] TVC Sol.: Disconnection ... 50
Failure code [DXA0KB] TVC Sol.: Short circuit ... 51
Failure code [DXA0KY] TVC Sol.: Short circuit ... 52
Failure code [DXH1KA] Lock-up ECMV: Disconnection ... 54
Failure code [DXH1KB] Lock-up ECMV: Short circuit ... 56

Failure code [DXH1KY] Lock-up ECMV: Short circuit ... 58
Failure code [DXH4KA] 1st clutch ECMV: Disconnection ... 60
Troubleshooting by failure and error codes, Part 7 SEN00722-01
Troubleshooting by failure and error codes, Part 7 ... 3
Failure code [DXH4KB] 1st clutch ECMV: Short circuit ... 3
Failure code [DXH4KY] 1st clutch ECMV: Short circuit ... 4
Failure code [DXH5KA] 2nd clutch ECMV: Disconnection ... 5
Failure code [DXH5KB] 2nd clutch ECMV: Short circuit ... 6
Failure code [DXH5KY] 2nd clutch ECMV: Short circuit ... 7
Failure code [DXH6KA] 3rd clutch ECMV: Disconnection ... 8
Failure code [DXH6KB] 3rd clutch ECMV: Short circuit ... 9
Failure code [DXH6KY] 3rd clutch ECMV: Short circuit ... 10
Failure code [DXH7KA] R clutch ECMV: Disconnection ... 11
Failure code [DXH7KB] R clutch ECMV: Short circuit ... 12
Failure code [DXH7KY] R clutch ECMV: Short circuit ... 13
Failure code [DXH8KA] F clutch ECMV: Disconnection ... 14
Failure code [DXH8KB] F clutch ECMV: Short circuit ... 15
Failure code [DXH8KY] F clutch ECMV: Short circuit ... 16
Failure code [DXHBKA] Right brake ECMV: Disconnection ... 18
Failure code [DXHBKB] Right brake ECMV: Short circuit ... 20
Failure code [DXHBKY] Right brake ECMV: Short circuit ... 22
Failure code [DXHCKA] Left brake ECMV: Disconnection ... 24
Failure code [DXHCKB] Left brake ECMV: Short circuit ... 26
Failure code [DXHCKY] Left brake ECMV: Short circuit ... 28
Failure code [DXHRKA] Blade up EPC: Disconnection ... 30
Failure code [DXHRKB] Blade up EPC: Short circuit ... 31
Failure code [DXHRKY] Blade up EPC: Short circuit ... 32
Failure code [DXHSKA] Blade down EPC: Disconnection ... 33
Failure code [DXHSKB] Blade down EPC: Short circuit ... 34
Failure code [DXHSKY] Blade down EPC: Short circuit ... 35
Failure code [DXHTKA] Blade left 1 EPC: Disconnection ... 36
Failure code [DXHTKB] Blade left 1 EPC: Short circuit ... 37
Failure code [DXHTKY] Blade left 1 EPC: Short circuit ... 38
Failure code [DXHUKA] Blade right 1 EPC: Disconnection ... 39
Failure code [DXHUKB] Blade right 1 EPC: Short circuit ... 40
Failure code [DXHUKY] Blade right 1 EPC: Short circuit ... 41
Failure code [DXHWKA] Ripper up EPC: Disconnection ... 42
Failure code [DXHWKB] Ripper up EPC: Short circuit ... 43
Failure code [DXHWKY] Ripper up EPC: Short circuit ... 44
Failure code [DXHXKA] Ripper down EPC: Disconnection ... 45
Failure code [DXHXKB] Ripper down EPC: Short circuit ... 46
Failure code [DXHXKY] Ripper down EPC: Short circuit ... 47
Failure code [DXHYKA] Ripper Tilt In EPC: Disconnection ... 48
Failure code [DXHYKB] Ripper Tilt In EPC: Short circuit ... 49
Failure code [DXHYKY] Ripper Tilt In EPC: Short circuit ... 50
Failure code [DXHZKA] Ripper Tilt Back EPC: Disconnection ... 51
Failure code [DXHZKB] Ripper Tilt Back EPC: Short circuit ... 52
Failure code [DXHZKY] Ripper Tilt Back EPC: Short circuit ... 53
Failure code [DXJ4KA] Weq lock Sol.: Disconnection ... 54
Failure code [DXJ4KB] Weq lock Sol.: Short circuit ... 55
Troubleshooting by failure and error codes, Part 8 SEN00723-01
Troubleshooting by failure and error codes, Part 8 ... 2
Failure code [DXJ8KA] Blade left 2 EPC: Disconnection ... 2
Failure code [DXJ8KB] Blade left 2 EPC: Short circuit ... 3
Failure code [DXJ8KY] Blade left 2 EPC: Short circuit ... 4
Failure code [DXJ9KA] Blade right 2 EPC: Disconnection ... 5
Failure code [DXJ9KB] Blade right 2 EPC: Short circuit ... 6
Failure code [DXJ9KY] Blade right 2 EPC: Short circuit ... 7

Failure code [DXJAKA] Q-drop EPC: Disconnection ... 8
Failure code [DXJAKB] Q-drop EPC: Short circuit ... 10
Failure code [DXJAKY] Q-drop EPC: Short circuit ... 12
Failure code [DXJBKA] S/C ECMV: Disconnection ... 14
Failure code [DXJBKB] S/C ECMV: Short circuit ... 16
Failure code [DXJBKY] S/C ECMV: Short circuit ... 18
Troubleshooting of electrical system (E-mode) SEN00807-01
Troubleshooting of electrical system (E-mode) ... 3
Before carrying out troubleshooting for electrical system ... 3
Information in troubleshooting table ... 7
E-1 When starting switch turned ON, machine monitor displays nothing ... 8
E-2 When starting switch turned ON (before startingengine), basic check item lights up ... 10
E-3 Engine does not start (Engine does not turn) ... 12
E-4 Preheater does not operate ... 14
E-5 Precaution item lights up while engine is running ... 18
E-6 Emergency stop item lights up while engine is running ... 20
E-7 Engine coolant temperature gauge does not indicate normally ... 22
E-8 Fuel level gauge does not indicate normally ... 23
E-9 Power train oil temperature gauge (multi-gauge) does not indicate normally ... 25
E-10 Hydraulic temperature gauge (multi-gauge) does not indicate normally ... 26
E-11 Contents of display by machine monitor are different from applicable machine ... 29
E-12 Machine monitor does not display some items ... 29
E-13 Function switch does not work ... 29
E-14 Operation mode does not change ... 30
E-15 Gearshift mode does not change ... 30
E-16 Customize function does not operate normally ... 31
E-17 Customize memory function does not normally ... 31
E-18 Float mode does not change ... 32
E-19 Alarm buzzer cannot be stopped ... 32
E-20 Air conditioner does not operate normally (including air conditioner fault history) ... 33
E-21 When starting switch is turned OFF, service meter is not displayed ... 46
E-22 Machine monitor cannot be set in service mode ... 46
E-23 Ripper pin puller cylinder does not operate ... 48
E-24 Backup alarm does not sound or does not stop ... 50
E-25 Headlamp, rear lamp, and ripper point lamp do not light up ... 52
E-26 Windshield wiper and window washer do not operate ... 56
E-27 KOMTRAX system does not operate normally ... 72
Troubleshooting of hydraulic and mechanical system (H-mode) SEN00808-00
Troubleshooting of hydraulic and mechanical system (H-mode) ... 3
Information in troubleshooting table ... 3
H-1 Power is low (Drawbar pull is low) ... 4
H-2 Machine does not travel (at 2nd or 3rd gear speed) ... 5
H-3 Machine does not start at any gear speed ... 6
H-4 Machine can travel only forward or in reverse ... 7
H-5 When gear speed or travel direction is changed, time lag is large ... 8
H-6 Machine cannot be steered (Machine does not turn right or left) ... 9
H-7 Steering speed or steering force is low ... 9
H-8 Brake does not work ... 10
H-9 Power train oil is overheated ... 11
H-10 Abnormal sound comes out from around HSS pump or HSS motor ... 12
H-11 Speed of all work equipment is low ... 13
H-12 No work equipment moves ... 14
H-13 Blade lift speed or power is low ... 15
H-14 Blade tilt speed or power is low ... 16
H-15 Ripper lift speed or power is low ... 17
H-16 Ripper tilt speed or power is low ... 18
H-17 Hydraulic drift of blade lift is large ... 18

H-18 Hydraulic drift of blade tilt is large ... 19
H-19 Hydraulic drift of ripper lift is large ... 19
H-20 Ripper pin puller cylinder does not operate ... 20
H-21 Blade does not pitch ... 20
H-22 Abnormal sound comes out from around work equipment pump ... 21
Troubleshooting of engine (S-mode) SEN00852-01
Troubleshooting of engine (S-mode) ... 3
Method of using troubleshooting chart ... 3
S-1 Starting performance of engine is poor ... 6
S-2 Engine does not start ... 8
S-3 Engine does not pick up smoothly ... 12
S-4 Engine stops during operation ... 13
S-5 Engine does not rotate smoothly ... 14
S-6 Engine lack output (or lacks power) ... 15
S-7 Exhaust gas is black (incomplete combustion) ... 16
S-8 Oil consumption is excessive (or exhaust gas is blue) ... 18
S-9 Oil becomes dirty quickly ... 19
S-10 Fuel consumption is excessive ... 20
S-11 Oil is in coolant (or coolant spurts back or coolant level goes ... 21
S-12 Oil pressure drops ... 22
S-13 Oil level rises (Entry of coolant or fuel) ... 24
S-14 Coolant temperature becomes too high (Overheating) ... 26
S-15 Abnormal noise is made ... 27
S-16 Vibration is excessive ... 28

50 Disassembly and assembly
General information on disassembly and assembly SEN01204-00
General information on disassembly and assembly ... 2
How to read this manual ... 2
List of adhesives ... 4
Special tool list ... 7
Engine and cooling system SEN01205-00
Engine and cooling system ... 2
Removal and installation of fuel supply pump assembly ... 2
Removal and installation of fuel injector assembly ... 6
Removal and installation of cylinder head assembly ... 11
Removal and installation of radiator assembly ... 22
Removal and installation of aftercooler assembly ... 24
Removal and installation of engine assembly ... 26
Removal and installation of engine hood assembly ... 30
Power train, Part 1 SEN01206-00
Power train, Part 1 ... 2
Removal and installation of damper assembly ... 2
Disassembly and assembly of damper assembly ... 5
Removal and installation of power train unit assembly ... 11
Disconnection and connection of power train unit assembly ... 15

90 Diagrams and drawings
Hydraulic circuit diagram SEN00616-01
Hydraulic circuit diagram ... 3
Power train hydraulic circuit diagram ... 3
Hydraulic circuit diagram (1/2) ... 5
Hydraulic circuit diagram (2/2) ... 7
Electrical circuit diagram SEN00617-02
Electrical circuit diagram ... 3

Electrical circuit diagram 3
Connectors table and arrangement drawing 5

D155AX-6 Bulldozer

Form No. SEN00598-02

© 2006 KOMATSU
All Rights Reserved
Printed in Japan 05-06 (02)

BULLDOZER

D155AX-6

Machine model	Serial number
D155AX-6	80001 and up

00 Index and foreword

Foreword and general information

Foreword and general information 2
Safety notice 2
How to read the shop manual 6
Explanation of terms for maintenance standard 8
Handling electric equipment and hydraulic component 10
How to read electric wire code 18
Method of disassembling and connecting push-pull type coupler 21
Standard tightening torque table 24
Conversion table 28

Foreword and general information

(Rev. 2005/11)

Safety notice

Important safety notice

Proper service and repair are extremely important for safe machine operation. The service and repair techniques recommended by Komatsu and described in this manual are both effective and safe. Some of these techniques require the use of tools specially designed by Komatsu for the specific purpose.

To prevent injury to workers, the symbol ⚠ is used to mark safety precautions in this manual. The cautions accompanying these symbols should always be followed carefully. If any dangerous situation arises or may possibly arise, first consider safety, and take the necessary actions to deal with the situation.

1. General precautions

⚠ **Mistakes in operation are extremely dangerous. Read the Operation and Maintenance Manual carefully before operating the machine.**

1) Before carrying out any greasing or repairs, read all the safety plates stuck to the machine. For the locations of the safety plates and detailed explanation of precautions, see the Operation and Maintenance Manual.
2) Decide a place in the repair workshop to keep tools and removed parts. Always keep the tools and parts in their correct places. Always keep the work area clean and make sure that there is no dirt, water, or oil on the floor. Smoke only in the areas provided for smoking. Never smoke while working.
3) When carrying out any operation, always wear safety shoes and helmet. Do not wear loose work clothes, or clothes with buttons missing.
   - Always wear safety glasses when hitting parts with a hammer.
   - Always wear safety glasses when grinding parts with a grinder, etc.
4) When carrying out any operation with 2 or more workers, always agree on the operating procedure before starting. Always inform your fellow workers before starting any step of the operation. Before starting work, hang UNDER REPAIR signs in the operator's compartment.
5) Only qualified workers must carry out work and operation which require license or qualification.
6) Keep all tools in good condition, learn the correct way to use them, and use the proper ones of them. Before starting work, thoroughly check the tools, machine, forklift, service car, etc.
7) If welding repairs are needed, always have a trained and experienced welder carry out the work. When carrying out welding work, always wear welding gloves, apron, shielding goggles, cap and other clothes suited for welding work.
8) Before starting work, warm up your body thoroughly to start work under good condition.

Safety points

1	Good arrangement
2	Correct work clothes
3	Following work standard
4	Making and checking signs
5	Prohibition of operation and handling by unlicensed workers
6	Safety check before starting work
7	Wearing protective goggles (for cleaning or grinding work)
8	Wearing shielding goggles and protectors (for welding work)
9	Good physical condition and preparation
10	Precautions against work which you are not used to or you are used to too much

2. Preparations for work

1) Before adding oil or making any repairs, park the machine on hard and level ground, and apply the parking brake and block the wheels or tracks to prevent the machine from moving.
2) Before starting work, lower the work equipment (blade, ripper, bucket, etc.) to the ground. If this is not possible, insert the lock pin or use blocks to prevent the work equipment from falling. In addition, be sure to lock all the control levers and hang warning signs on them.

3) When disassembling or assembling, support the machine with blocks, jacks, or stands before starting work.
4) Remove all mud and oil from the steps or other places used to get on and off the machine. Always use the handrails, ladders or steps when getting on or off the machine. Never jump on or off the machine. If it is impossible to use the handrails, ladders or steps, use a stand to provide safe footing.

3. Precautions during work

1) Before disconnecting or removing components of the oil, water, or air circuits, first release the pressure completely from the circuit. When removing the oil filler cap, a drain plug, or an oil pressure pickup plug, loosen it slowly to prevent the oil from spurting out.
2) The coolant and oil in the circuits are hot when the engine is stopped, so be careful not to get scalded. Wait for the oil and coolant to cool before carrying out any work on the oil or water circuits.
3) Before starting work, stop the engine. When working on or around a rotating part, in particular, stop the engine. When checking the machine without stopping the engine (measuring oil pressure, revolving speed, temperature, etc.), take extreme care not to get rolled or caught in rotating parts or moving parts.
4) Before starting work, remove the leads from the battery. Always remove the lead from the negative (–) terminal first.
5) When raising a heavy component (heavier than 25 kg), use a hoist or crane. Before starting work, check that the slings (wire ropes, chains, and hooks) are free from damage. Always use slings which have ample capacity and install them to proper places. Operate the hoist or crane slowly to prevent the component from hitting any other part. Do not work with any part still raised by the hoist or crane.
6) When removing a cover which is under internal pressure or under pressure from a spring, always leave 2 bolts in diagonal positions. Loosen those bolts gradually and alternately to release the pressure, and then remove the cover.
7) When removing components, be careful not to break or damage the electrical wiring. Damaged wiring may cause electrical fires.
8) When removing piping, stop the fuel or oil from spilling out. If any fuel or oil drips onto the floor, wipe it up immediately. Fuel or oil on the floor can cause you to slip and can even start fires.
9) As a general rule, do not use gasoline to wash parts. Do not use it to clean electrical parts, in particular.
10) Be sure to assemble all parts again in their original places. Replace any damaged parts and parts which must not be reused with new parts. When installing hoses and wires, be sure that they will not be damaged by contact with other parts when the machine is operated.
11) When installing high pressure hoses, make sure that they are not twisted. Damaged tubes are dangerous, so be extremely careful when installing tubes for high pressure circuits. In addition, check that connecting parts are correctly installed.
12) When assembling or installing parts, always tighten them to the specified torques. When installing protective parts such as guards, or parts which vibrate violently or rotate at high speed, be particularly careful to check that they are installed correctly.
13) When aligning 2 holes, never insert your fingers or hand. Be careful not to get your fingers caught in a hole.
14) When measuring hydraulic pressure, check that the measuring tools are correctly assembled.
15) Take care when removing or installing the tracks of track-type machines. When removing the track, the track separates suddenly, so never let anyone stand at either end of the track.
16) If the engine is operated for a long time in a place which is not ventilated well, you may suffer from gas poisoning. Accordingly, open the windows and doors to ventilate well.

4. Precautions for sling work and making signs

1) Only one appointed worker must make signs and co-workers must communicate with each other frequently. The appointed sign maker must make specified signs clearly at a place where he is seen well from the operator's seat and where he can see the working condition easily. The sign maker must always stand in front of the load and guide the operator safely.
   - Do not stand under the load.
   - Do not step on the load.
2) Check the slings before starting sling work.
3) Keep putting on gloves during sling work. (Put on leather gloves, if available.)
4) Measure the weight of the load by the eye and check its center of gravity.
5) Use proper sling according to the weight of the load and method of slinging. If too thick wire ropes are used to sling a light load, the load may slip and fall.
6) Do not sling a load with 1 wire rope alone. If it is slung so, it may rotate and may slip out of the rope. Install 2 or more wire ropes symmetrically.
   ⚠ **Slinging with one rope may cause turning of the load during hoisting, untwisting of the rope, or slipping of the rope from its original winding position on the load, which can result in a dangerous accident.**
7) Limit the hanging angle to 60°, as a rule. Do not sling a heavy load with ropes forming a wide hanging angle from the hook. When hoisting a load with 2 or more ropes, the force subjected to each rope will increase with the hanging angle. The table below shows the variation of allowable load in kN {kg} when hoisting is made with 2 ropes, each of which is allowed to sling up to 9.8 kN {1,000 kg} vertically, at various hanging angles. When the 2 ropes sling a load vertically, up to 19.6 kN {2,000 kg} of total weight can be suspended. This weight is reduced to 9.8 kN {1,000 kg} when the 2 ropes make a hanging angle of 120°. If the 2 ropes sling a 19.6 kN {2,000 kg} load at a lifting angle of 150°, each of them is subjected to a force as large as 39.2 kN {4,000 kg}.

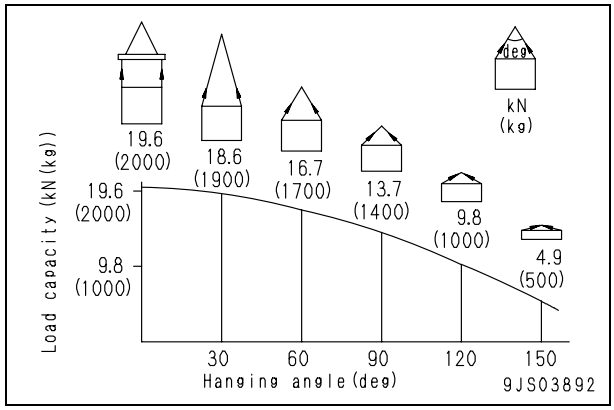

8) When installing wire ropes to an angular load, apply pads to protect the wire ropes. If the load is slippery, apply proper material to prevent the wire rope from slipping.
9) Use the specified eyebolts and fix wire ropes, chains, etc. to them with shackles, etc.
10) Apply wire ropes to the middle portion of the hook.
    - Slinging near the tip of the hook may cause the rope to slip off the hook during hoisting. The hook has the maximum strength at the middle portion.

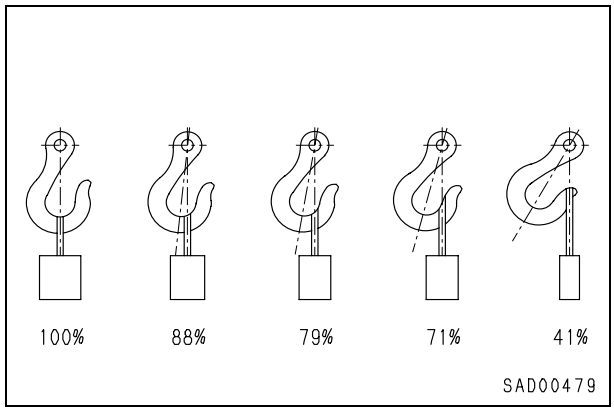

11) Do not use twisted or kinked wire ropes.
12) When lifting up a load, observe the following.
    - Wind in the crane slowly until wire ropes are stretched. When settling the wire ropes with the hand, do not grasp them but press them from above. If you grasp them, your fingers may be caught.
    - After the wire ropes are stretched, stop the crane and check the condition of the slung load, wire ropes, and pads.

- If the load is unstable or the wire rope or chains are twisted, lower the load and lift it up again.
- Do not lift up the load slantingly.

13) When lifting down a load, observe the following.
- When lifting down a load, stop it temporarily at 30 cm above the floor, and then lower it slowly.
- Check that the load is stable, and then remove the sling.
- Remove kinks and dirt from the wire ropes and chains used for the sling work, and put them in the specified place.

5. Precautions for using mobile crane

★ Read the Operation and Maintenance Manual of the crane carefully in advance and operate the crane safely.

6. Precautions for using overhead hoist crane

⚠ **When raising a heavy part (heavier than 25 kg), use a hoist, etc. In Disassembly and assembly, the weight of a part heavier than 25 kg is indicated after the mark of .**

1) Before starting work, inspect the wire ropes, brake, clutch, controller, rails, over wind stop device, electric shock prevention earth leakage breaker, crane collision prevention device, and power application warning lamp, and check safety.
2) Observe the signs for sling work.
3) Operate the hoist at a safe place.
4) Check the direction indicator plates (east, west, south, and north) and the directions of the control buttons without fail.
5) Do not sling a load slantingly. Do not move the crane while the slung load is swinging.
6) Do not raise or lower a load while the crane is moving longitudinally or laterally.
7) Do not drag a sling.
8) When lifting up a load, stop it just after it leaves the ground and check safety, and then lift it up.
9) Consider the travel route in advance and lift up a load to a safe height.
10) Place the control switch on a position where it will not be an obstacle to work and passage.
11) After operating the hoist, do not swing the control switch.
12) Remember the position of the main switch so that you can turn off the power immediately in an emergency.
13) If the hoist stops because of a power failure, turn the power switch OFF. When turning on a switch which was turned OFF by the electric shock prevention earth leakage breaker, check that the devices related to that switch are not in operation state.
14) If you find an obstacle around the hoist, stop the operation.
15) After finishing the work, stop the hoist at the specified position and raise the hook to at least 2 m above the floor. Do not leave the sling installed to the hook.

7. Selecting wire ropes

1) Select adequate ropes depending on the weight of parts to be hoisted, referring to the table below.

Wire ropes
(Standard “Z” twist ropes without galvanizing)
(JIS G3525, No. 6, Type 6X37-A)

Nominal diameter of rope	Allowable load	
mm	kN	ton
10	8.8	0.9
12	12.7	1.3
14	17.3	1.7
16	22.6	2.3
18	28.6	2.9
20	35.3	3.6
25	55.3	5.6
30	79.6	8.1
40	141.6	14.4
50	221.6	22.6
60	318.3	32.4

★ The allowable load is one-sixth of the breaking strength of the rope used (Safety coefficient: 6).

How to read the shop manual

- Some attachments and optional parts in this shop manual may not be delivered to certain areas. If one of them is required, consult KOMATSU distributors.
- Materials and specifications are subject to change without notice.
- Shop manuals are divided into the “Chassis volume” and “Engine volume”. For the engine unit, see the engine volume of the engine model mounted on the machine.

1. Composition of shop manual

This shop manual contains the necessary technical information for services performed in a workshop. For ease of understanding, the manual is divided into the following sections.

00. Index and foreword

This section explains the shop manuals list, table of contents, safety, and basic information.

01. Specification

This section explains the specifications of the machine.

10. Structure, function and maintenance standard

This section explains the structure, function, and maintenance standard values of each component. The structure and function sub-section explains the structure and function of each component. It serves not only to give an understanding of the structure, but also serves as reference material for troubleshooting. The maintenance standard sub-section explains the criteria and remedies for disassembly and service.

20. Standard value table

This section explains the standard values for new machine and judgement criteria for testing, adjusting, and troubleshooting. This standard value table is used to check the standard values in testing and adjusting and to judge parts in troubleshooting.

30. Testing and adjusting

This section explains measuring instruments and measuring methods for testing and adjusting, and method of adjusting each part. The standard values and judgement criteria for testing and adjusting are explained in Testing and adjusting.

40. Troubleshooting

This section explains how to find out failed parts and how to repair them. The troubleshooting is divided by failure modes. The “S mode” of the troubleshooting related to the engine may be also explained in the Chassis volume and Engine volume. In this case, see the Chassis volume.

50. Disassembly and assembly

This section explains the special tools and procedures for removing, installing, disassembling, and assembling each component, as well as precautions for them. In addition, tightening torque and quantity and weight of coating material, oil, grease, and coolant necessary for the work are also explained.

90. Diagrams and drawings (chassis volume)/Repair and replacement of parts (engine volume)

- Chassis volume
  This section gives hydraulic circuit diagrams and electrical circuit diagrams.
- Engine volume
  This section explains the method of reproducing, repairing, and replacing parts.

2. Revision and distribution

Any additions, revisions, or other change of notices will be sent to KOMATSU distributors. Get the most up-to-date information before you start any work.

3. Filing method

File by the brochures in the correct order of the form number printed in the shop manual composition table.

- **Revised edition mark**
  When a manual is revised, the ones and tens digits of the form number of each brochure is increased by 1. (Example: 00, 01, 02 …)

- **Revisions**
  Revised brochures are shown in the shop manual composition table.

4. Symbols

Important safety and quality portions are marked with the following symbols so that the shop manual will be used practically.

Symbol	Item	Remarks
	Safety	Special safety precautions are necessary when performing work.
★	Caution	Special technical precautions or other precautions for preserving standards are necessary when performing work.
	Weight	Weight of parts of component or parts. Caution necessary when selecting hoisting wire, or when working posture is important, etc.
	Tightening torque	Places that require special attention for tightening torque during assembly.
	Coat	Places to be coated with adhesives, etc. during assembly.
	Oil, coolant	Places where oil, etc. must be added, and capacity.
	Drain	Places where oil, etc. must be drained, and quantity to be drained.

5. Units

In this shop manual, the units are indicated with International System of units (SI). For reference, conventionally used Gravitational System of units is indicated in parentheses { }.

Explanation of terms for maintenance standard

The maintenance standard values necessary for judgment of products and parts are described by the following terms.

1. Standard size and tolerance

- To be accurate, the finishing size of parts is a little different from one to another.
- To specify a finishing size of a part, a temporary standard size is set and an allowable difference from that size is indicated.
- The above size set temporarily is called the “standard size” and the range of difference from the standard size is called the “tolerance”.
- The tolerance with the symbols of + or – is indicated on the right side of the standard size.

Example:

Standard size	Tolerance
120	–0.022 –0.126

★ The tolerance may be indicated in the text and a table as [standard size (upper limit of tolerance/lower limit of tolerance)].
Example) 120 (–0.022/–0.126)

- Usually, the size of a hole and the size of the shaft to be fitted to that hole are indicated by the same standard size and different tolerances of the hole and shaft. The tightness of fit is decided by the tolerance.
- Indication of size of rotating shaft and hole and relationship drawing of them

Example:

Standard size	Tolerance	
	Shaft	Hole
60	–0.030 –0.076	+0.046 0

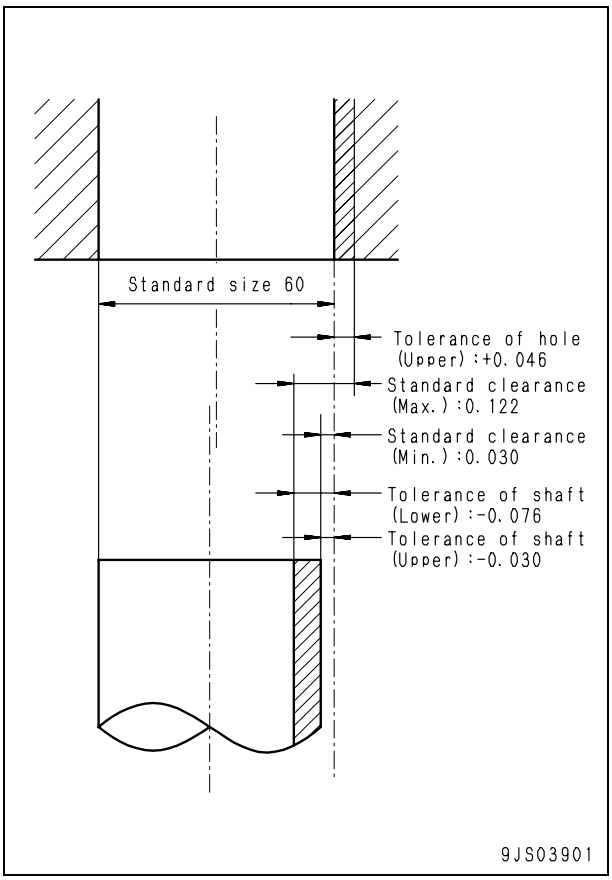

2. Standard clearance and standard value

- The clearance made when new parts are assembled is called the “standard clearance“, which is indicated by the range from the minimum clearance to the maximum clearance.
- When some parts are repaired, the clearance is generally adjusted to the standard clearance.
- A value of performance and function of new products or equivalent is called the “standard value“, which is indicated by a range or a target value.
- When some parts are repaired, the value of performance/function is set to the standard value.

3. Standard interference

- When the size of a hole is smaller than the size of a shaft because of the standard size and tolerance, the difference between these sizes is called the “interference”.
- The range (A – B) from the difference (A) between the minimum size of the shaft and the maximum size of the hole to the difference (B) between the maximum size of the shaft and the minimum size of the hole is the “standard interference”.
- After repairing or replacing some parts, measure the size of their hole and shaft and check that the interference is in the standard range.

4. Repair limit and allowable value

- The size of a part changes because of wear and deformation while it is used. The limit of changed size is called the “repair limit”.
- If a part is worn to the repair limit must be replaced or repaired.
- The performance and function of a product lowers while it is used. A value below which the product can be used without causing a problem is called the “allowable value”.
- If a product is worn to the allowable value, it must be checked or repaired. Since the permissible value is estimated from various tests or experiences in most cases, however, it must be judged after considering the operating condition and customer's requirement.

5. Clearance limit

- Parts can be used until the clearance between them is increased to a certain limit. The limit at which those parts cannot be used is called the “clearance limit”.
- If the clearance between the parts exceeds the clearance limit, they must be replaced or repaired.

6. Interference limit

- The allowable maximum interference between the hole of a part and the shaft of another part to be assembled is called the “interference limit”.
- The interference limit shows the repair limit of the part of smaller tolerance.
- If the interference between the parts exceeds the interference limit, they must be replaced or repaired.

Handling electric equipment and hydraulic component

To maintain the performance of the machine over a long period, and to prevent failures or other troubles before they occur, correct “operation“, “maintenance and inspection“, “troubleshooting“, and “repairs” must be carried out. This section deals particularly with correct repair procedures for mechatronics and is aimed at improving the quality of repairs. For this purpose, it gives sections on “Handling electric equipment” and “Handling hydraulic equipment” (particularly gear oil and hydraulic oil).

Points to remember when handling electric equipment

1. Handling wiring harnesses and connectors

Wiring harnesses consist of wiring connecting one component to another component, connectors used for connecting and disconnecting one wire from another wire, and protectors or tubes used for protecting the wiring.

Compared with other electrical components fitted in boxes or cases, wiring harnesses are more likely to be affected by the direct effects of rain, water, heat, or vibration. Furthermore, during inspection and repair operations, they are frequently removed and installed again, so they are likely to suffer deformation or damage. For this reason, it is necessary to be extremely careful when handling wiring harnesses.

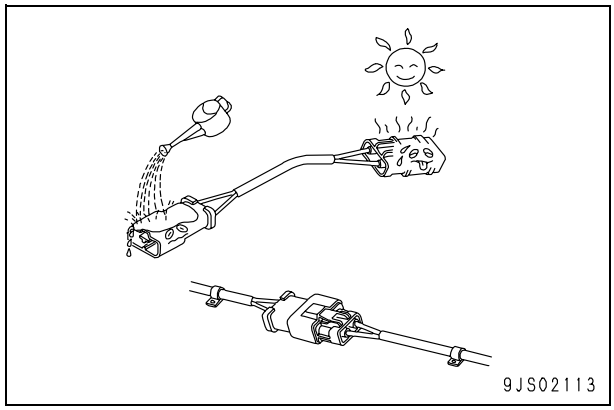

2. Main failures occurring in wiring harness

1) Defective contact of connectors (defective contact between male and female)

Problems with defective contact are likely to occur because the male connector is not properly inserted into the female connector, or because one or both of the connectors is deformed or the position is not correctly aligned, or because there is corrosion or oxidization of the contact surfaces.

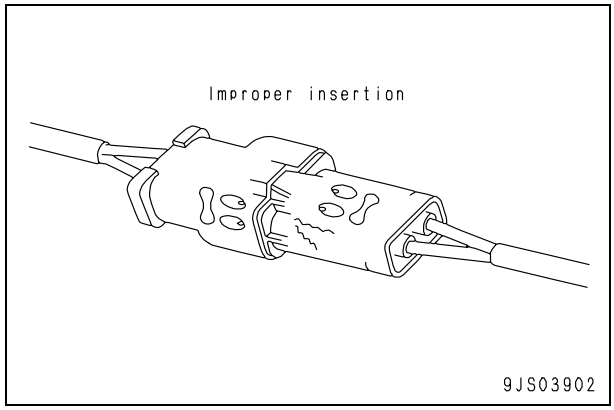

2) Defective crimping or soldering of connectors

The pins of the male and female connectors are in contact at the crimped terminal or soldered portion, but if there is excessive force brought to bear on the wiring, the plating at the joint will peel and cause improper connection or breakage.

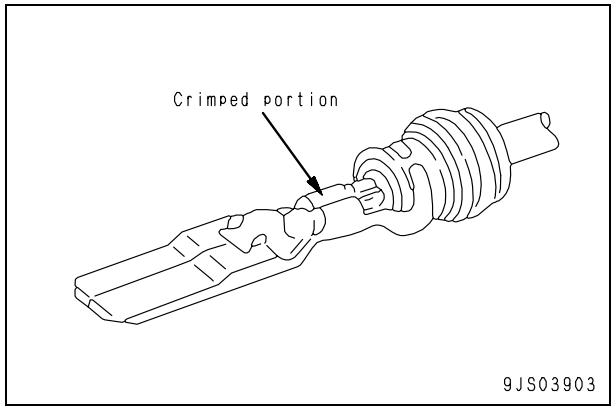

3) Disconnections in wiring
If the wiring is held and the connectors are pulled apart, or components are lifted with a crane with the wiring still connected, or a heavy object hits the wiring, the crimping of the connector may separate, or the soldering may be damaged, or the wiring may be broken.

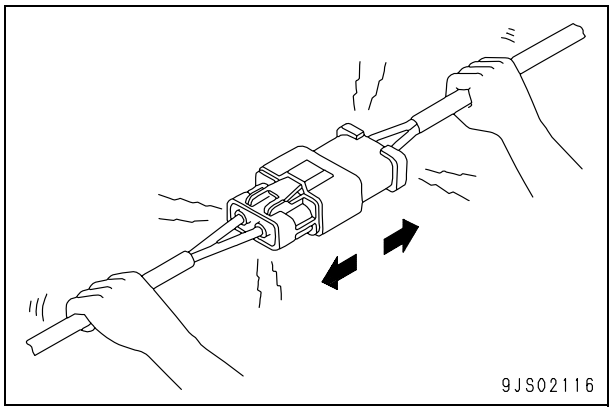

4) High-pressure water entering connector
The connector is designed to make it difficult for water to enter (drip-proof structure), but if high-pressure water is sprayed directly on the connector, water may enter the connector, depending on the direction of the water jet. Accordingly, take care not splash water over the connector. The connector is designed to prevent water from entering, but at the same time, if water does enter, it is difficult for it to be drained. Therefore, if water should get into the connector, the pins will be short-circuited by the water, so if any water gets in, immediately dry the connector or take other appropriate action before passing electricity through it.

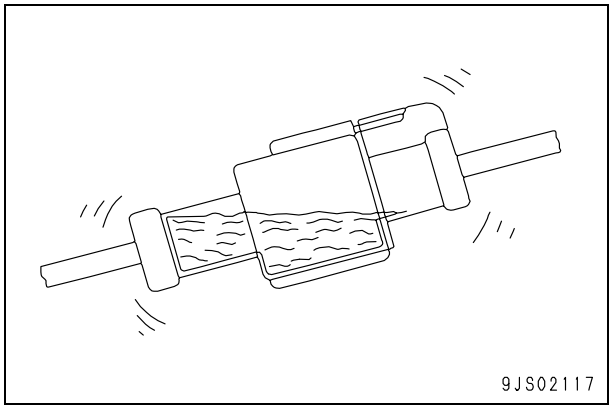

5) Oil or dirt stuck to connector
If oil or grease are stuck to the connector and an oil film is formed on the mating surface between the male and female pins, the oil will not let the electricity pass, so there will be defective contact. If there is oil or grease stuck to the connector, wipe it off with a dry cloth or blow it dry with compressed air and spray it with a contact restorer.
★ When wiping the mating portion of the connector, be careful not to use excessive force or deform the pins.
★ If there is oil or water in the compressed air, the contacts will become even dirtier, so remove the oil and water from the compressed air completely before cleaning with compressed air.

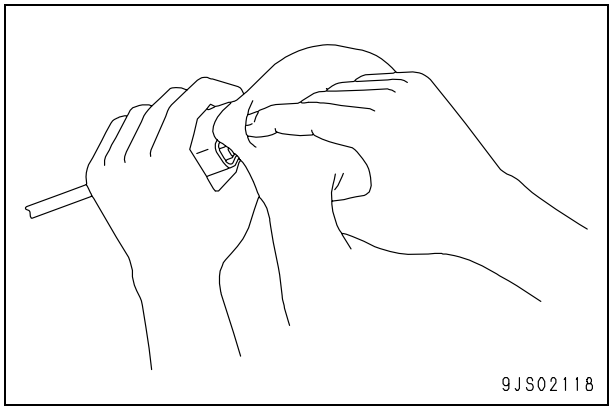

3. Removing, installing, and drying connectors and wiring harnesses

1) Disconnecting connectors

1] Hold the connectors when disconnecting.
When disconnecting the connectors, hold the connectors. For connectors held by a screw, loosen the screw fully, then hold the male and female connectors in each hand and pull apart. For connectors which have a lock stopper, press down the stopper with your thumb and pull the connectors apart.
★ Never pull with one hand.

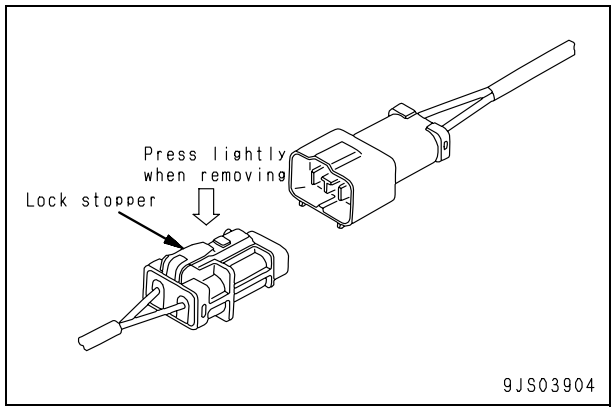

2] When removing from clips

- Both of the connector and clip have stoppers, which are engaged with each other when the connector is installed.

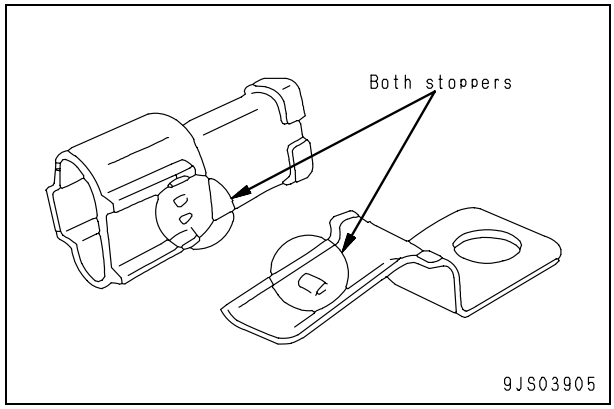

- When removing a connector from a clip, pull the connector in a parallel direction to the clip for removing stoppers.
★ If the connector is twisted up and down or to the left or right, the housing may break.

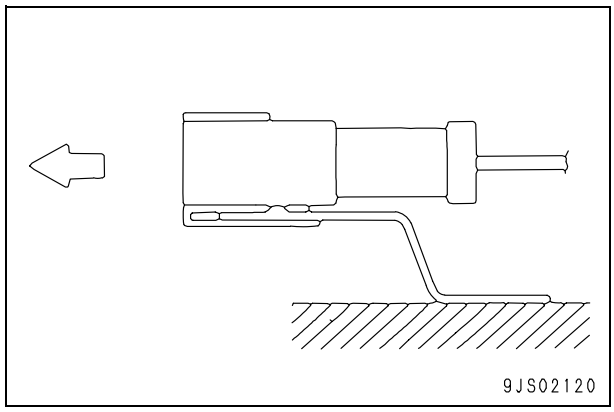

3] Action to take after removing connectors
After removing any connector, cover it with a vinyl bag to prevent any dust, dirt, oil, or water from getting in the connector portion.
★ If the machine is left disassembled for a long time, it is particularly easy for improper contact to occur, so always cover the connector.

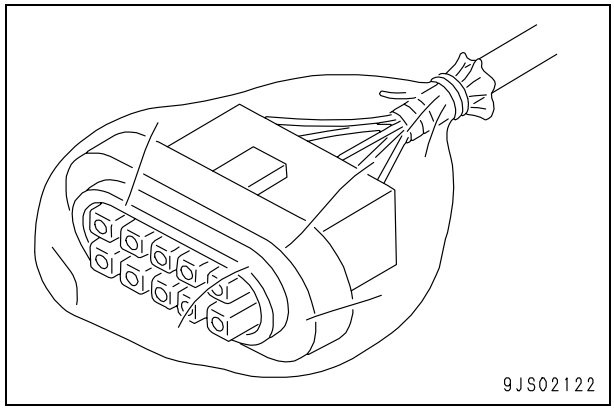

2) Connecting connectors
   1] Check the connector visually.
   Check that there is no oil, dirt, or water stuck to the connector pins (mating portion).
   Check that there is no deformation, defective contact, corrosion, or damage to the connector pins.
   Check that there is no damage or breakage to the outside of the connector.
   ★ If there is any oil, water, or dirt stuck to the connector, wipe it off with a dry cloth. If any water has got inside the connector, warm the inside of the wiring with a dryer, but be careful not to make it too hot as this will cause short circuits.
   ★ If there is any damage or breakage, replace the connector.
   2] Fix the connector securely.
   Align the position of the connector correctly, and then insert it securely. For connectors with lock stopper, push in the connector until the stopper clicks into position.
   3] Correct any protrusion of the boot and any misalignment of the wiring harness.
   For connectors fitted with boots, correct any protrusion of the boot. In addition, if the wiring harness is misaligned, or the clamp is out of position, adjust it to its correct position.
   ★ If the connector cannot be corrected easily, remove the clamp and adjust the position.
   ● If the connector clamp has been removed, be sure to return it to its original position. Check also that there are no loose clamps.

3) Connecting DT connectors
   Since the DT 8-pin and 12-pin heavy duty wire connectors have 2 latches respectively, push them in until they click 2 times.

   1. Male connector
   2. Female connector
   ● Normal locking state (Horizontal): a, b, d
   ● Incomplete locking state (Diagonal): c

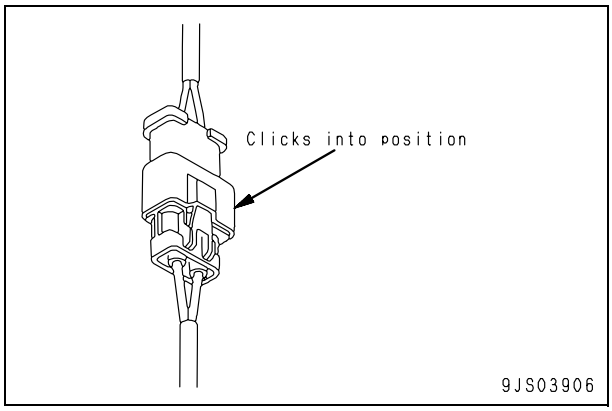

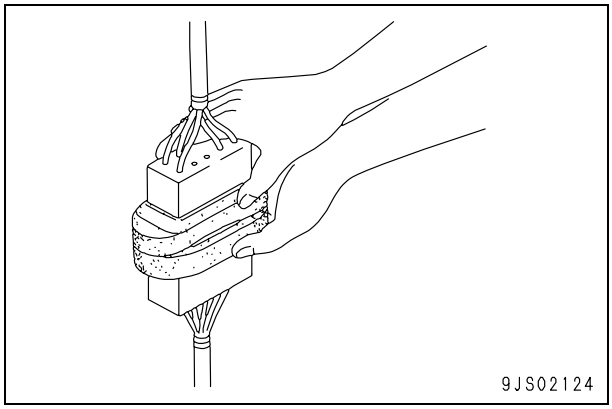

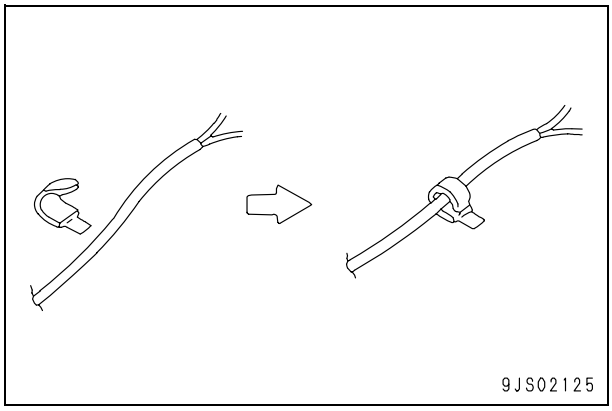

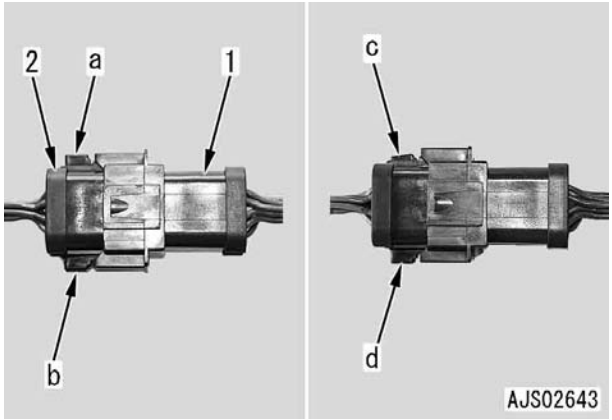

4) Drying wiring harness
If there is any oil or dirt on the wiring harness, wipe it off with a dry cloth. Avoid washing it in water or using steam. If the connector must be washed in water, do not use high-pressure water or steam directly on the wiring harness. If water gets directly on the connector, do as follows.
   1] Disconnect the connector and wipe off the water with a dry cloth.
      ★ If the connector is blown dry with compressed air, there is the risk that oil in the air may cause defective contact, so remove all oil and water from the compressed air before blowing with air.
   2] Dry the inside of the connector with a dryer.
      If water gets inside the connector, use a dryer to dry the connector.
      ★ Hot air from the dryer can be used, but regulate the time that the hot air is used in order not to make the connector or related parts too hot, as this will cause deformation or damage to the connector.
   3] Carry out a continuity test on the connector.
      After drying, leave the wiring harness disconnected and carry out a continuity test to check for any short circuits between pins caused by water.
      ★ After completely drying the connector, blow it with contact restorer and reassemble.

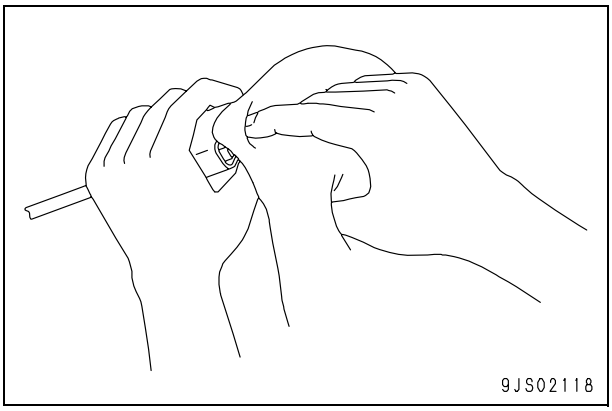

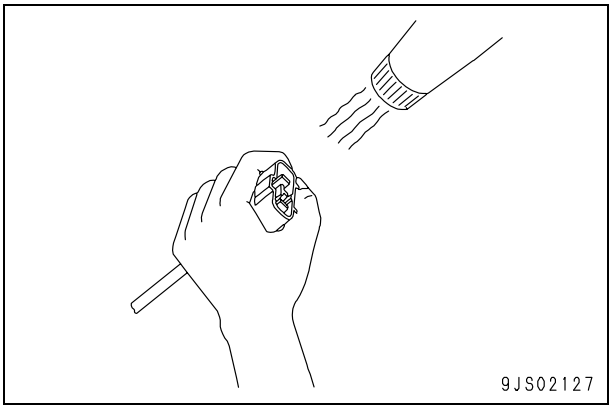

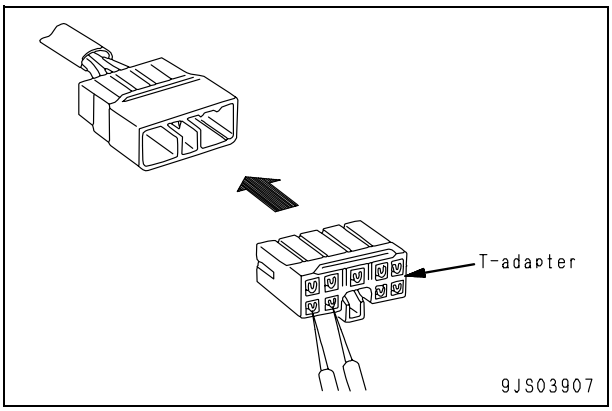

4. Handling controller

1) The controller contains a microcomputer and electronic control circuits. These control all of the electronic circuits on the machine, so be extremely careful when handling the controller.
2) Do not place objects on top of the controller.
3) Cover the control connectors with tape or a vinyl bag. Never touch the connector contacts with your hand.
4) During rainy weather, do not leave the controller in a place where it is exposed to rain.
5) Do not place the controller on oil, water, or soil, or in any hot place, even for a short time. (Place it on a suitable dry stand).
6) Precautions when carrying out arc welding
When carrying out arc welding on the body, disconnect all wiring harness connectors connected to the controller. Fit an arc welding ground close to the welding point.

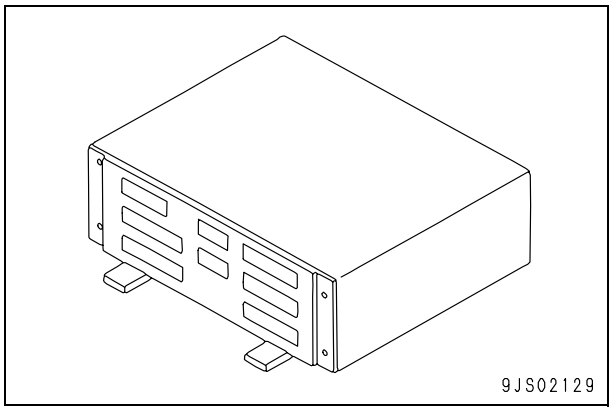

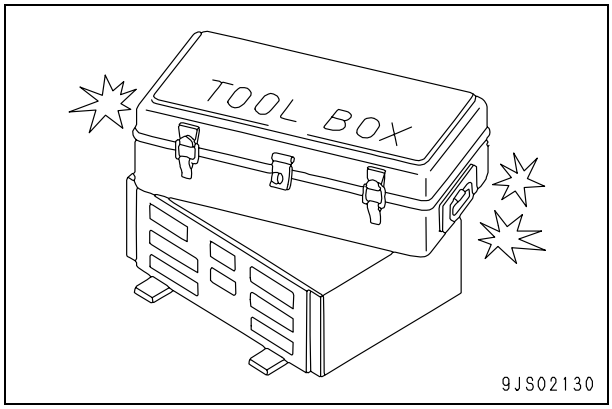

5. Points to remember when troubleshooting electric circuits

1) Always turn the power OFF before disconnecting or connecting connectors.
2) Before carrying out troubleshooting, check that all the related connectors are properly inserted.
   ★ Disconnect and connect the related connectors several times to check.
3) Always connect any disconnected connectors before going on to the next step.
   ★ If the power is turned ON with the connectors still disconnected, unnecessary abnormality displays will be generated.
4) When carrying out troubleshooting of circuits (measuring the voltage, resistance, continuity, or current), move the related wiring and connectors several times and check that there is no change in the reading of the tester.
   ★ If there is any change, there is probably defective contact in that circuit.

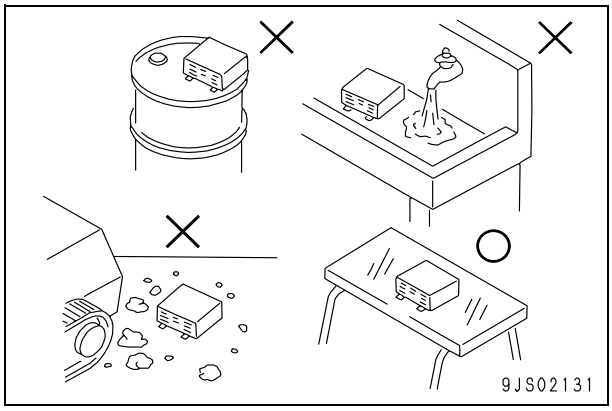

Points to remember when handling hydraulic equipment

With the increase in pressure and precision of hydraulic equipment, the most common cause of failure is dirt (foreign material) in the hydraulic circuit. When adding hydraulic oil, or when disassembling or assembling hydraulic equipment, it is necessary to be particularly careful.

1. **Be careful of the operating environment.**
   Avoid adding hydraulic oil, replacing filters, or repairing the machine in rain or high winds, or places where there is a lot of dust.

2. **Disassembly and maintenance work in the field**
   If disassembly or maintenance work is carried out on hydraulic equipment in the field, there is danger of dust entering the equipment. It is also difficult to check the performance after repairs, so it is desirable to use unit exchange. Disassembly and maintenance of hydraulic equipment should be carried out in a specially prepared dustproof workshop, and the performance should be checked with special test equipment.

3. **Sealing openings**
   After any piping or equipment is removed, the openings should be sealed with caps, tapes, or vinyl bags to prevent any dirt or dust from entering. If the opening is left open or is blocked with a rag, there is danger of dirt entering or of the surrounding area being made dirty by leaking oil so never do this. Do not simply drain oil out onto the ground, but collect it and ask the customer to dispose of it, or take it back with you for disposal.

4. **Do not let any dirt or dust get in during refilling operations**
   Be careful not to let any dirt or dust get in when refilling with hydraulic oil. Always keep the oil filler and the area around it clean, and also use clean pumps and oil containers. If an oil cleaning device is used, it is possible to filter out the dirt that has collected during storage, so this is an even more effective method.

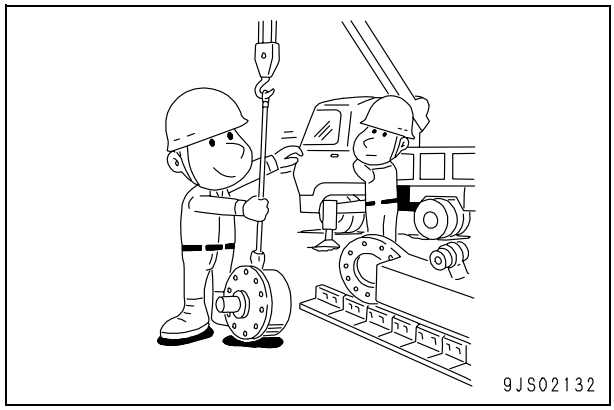

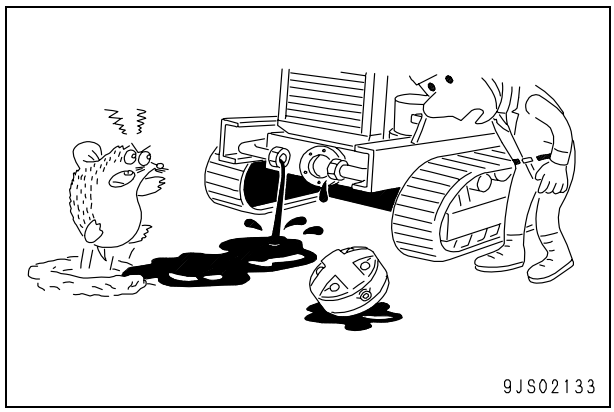

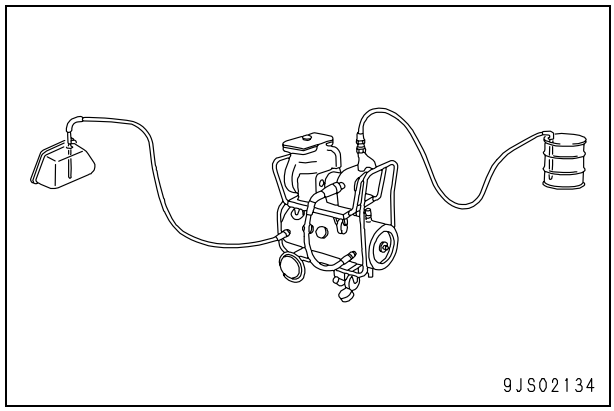

5. Change hydraulic oil when the temperature is high

When hydraulic oil or other oil is warm, it flows easily. In addition, the sludge can also be drained out easily from the circuit together with the oil, so it is best to change the oil when it is still warm. When changing the oil, as much as possible of the old hydraulic oil must be drained out. (Drain the oil from the hydraulic tank; also drain the oil from the filter and from the drain plug in the circuit.) If any old oil is left, the contaminants and sludge in it will mix with the new oil and will shorten the life of the hydraulic oil.

6. Flushing operations

After disassembling and assembling the equipment, or changing the oil, use flushing oil to remove the contaminants, sludge, and old oil from the hydraulic circuit. Normally, flushing is carried out twice: primary flushing is carried out with flushing oil, and secondary flushing is carried out with the specified hydraulic oil.

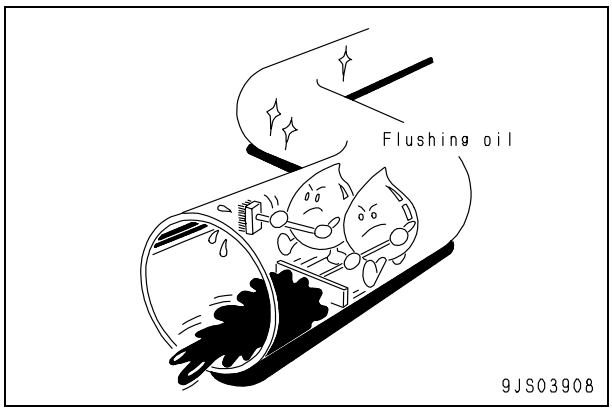

7. Cleaning operations

After repairing the hydraulic equipment (pump, control valve, etc.) or when running the machine, carry out oil cleaning to remove the sludge or contaminants in the hydraulic oil circuit. The oil cleaning equipment is used to remove the ultra fine (about 3μ) particles that the filter built in the hydraulic equipment cannot remove, so it is an extremely effective device.

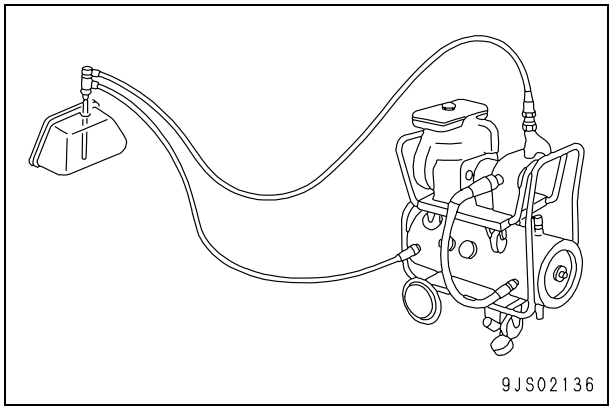

How to read electric wire code

★ The information about the wires unique to each machine model is described in Troubleshooting section, Relational information of troubleshooting.

In the electric circuit diagram, the material, thickness, and color of each electric wire are indicated by symbols. The electric wire code is helpful in understanding the electric circuit diagram.

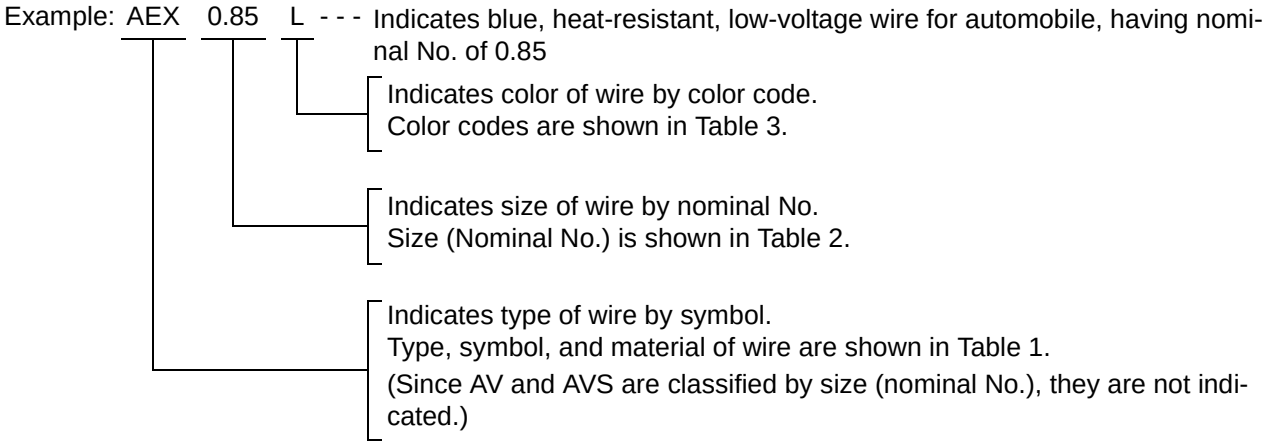

1. Type, symbol, and material

AV and AVS are different in only thickness and outside diameter of the cover. AEX is similar to AV in thickness and outside diameter of AEX and different from AV and AVS in material of the cover.

(Table 1)

Type	Symbol	Material		Using temperature range (°C)	Example of use
Low-voltage wire for automobile	AV	Conductor	Annealed copper for electric appliance	–30 to +60	General wiring (Nominal No. 5 and above)
		Insulator	Soft polyvinyl chloride		
Thin-cover low-voltage wire for automobile	AVS	Conductor	Annealed copper for electric appliance		General wiring (Nominal No. 3 and below)
		Insulator	Soft polyvinyl chloride		
Heat-resistant low-voltage wire for automobile	AEX	Conductor	Annealed copper for electric appliance	–50 to +110	General wiring in extremely cold district, wiring at high-temperature place
		Insulator	Heat-resistant crosslinked polyethylene		

2. Dimensions

(Table 2)

Nominal No.			0.5f	(0.5)	0.75f	(0.85)	1.25f	(1.25)	2f	2	3f	3	5
Conductor		Number of strands/Diameter of strand	20/0.18	7/0.32	30/0.18	11/0.32	50/0.18	16/0.32	37/0.26	26/0.32	58/0.26	41/0.32	65/0.32
		Sectional area (mm^2)	0.51	0.56	0.76	0.88	1.27	1.29	1.96	2.09	3.08	3.30	5.23
		d (approx.)	1.0		1.2		1.5		1.9	1.9	2.3	2.4	3.0
Cover D	AVS	Standard	2.0		2.2		2.5		2.9	2.9	3.5	3.6	–
	AV	Standard	–		–		–		–	–	–	–	4.6
	AEX	Standard	2.0		2.2		2.7		3.0	3.1	–	3.8	4.6

Nominal No.			8	15	20	30	40	50	60	85	100
Conductor		Number of strands/Diameter of strand	50/0.45	84/0.45	41/0.80	70/0.80	85/0.80	108/0.80	127/0.80	169/0.80	217/0.80
		Sectional area (mm^2)	7.95	13.36	20.61	35.19	42.73	54.29	63.84	84.96	109.1
		d (approx.)	3.7	4.8	6.0	8.0	8.6	9.8	10.4	12.0	13.6
Cover D	AVS	Standard	–	–	–	–	–	–	–	–	–
	AV	Standard	5.5	7.0	8.2	10.8	11.4	13.0	13.6	16.0	17.6
	AEX	Standard	5.3	7.0	8.2	10.8	11.4	13.0	13.6	16.0	17.6

“f” of nominal No. denotes flexible”.

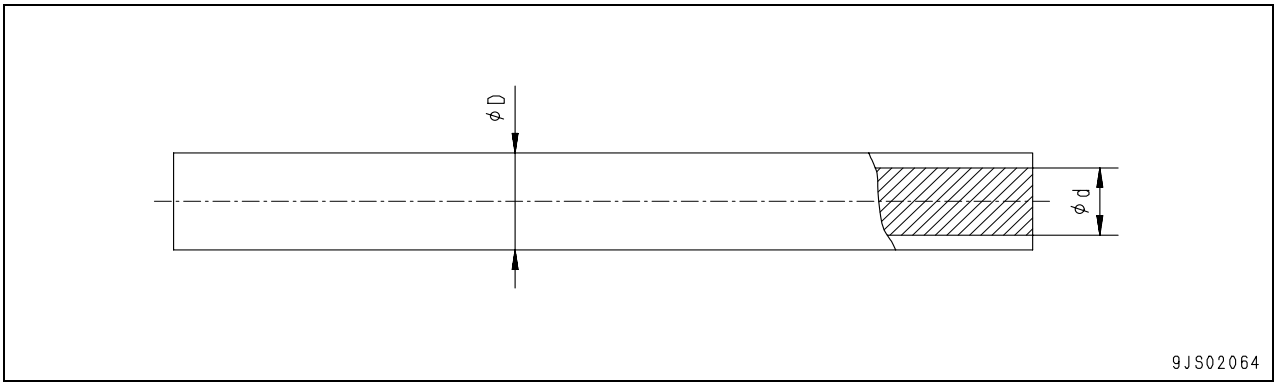

3. Color codes table

(Table 3)

Color Code	Color of wire	Color Code	Color of wire
B	Black	LgW	Light green & White
Br	Brown	LgY	Light green & Yellow
BrB	Brown & Black	LR	Blue & Red
BrR	Brown & Red	LW	Blue & White
BrW	Brown & White	LY	Blue & Yellow
BrY	Brown & Yellow	O	Orange
Ch	Charcoal	P	Pink
Dg	Dark green	R	Red
G	Green	RB	Red & Black
GB	Green & Black	RG	Red & Green
GL	Green & Blue	RL	Red & Blue
Gr	Gray	RW	Red & White
GR	Green & Red	RY	Red & Yellow
GW	Green & White	Sb	Sky Blue
GY	Green & Yellow	Y	Yellow
L	Blue	YB	Yellow & Black
LB	Blue & Black	YG	Yellow &Green
Lg	Light green	YL	Yellow & Blue
LgB	Light green & Black	YR	Yellow & Red
LgR	Light green & Red	YW	Yellow & White

Remarks: In a color code consisting of 2 colors, the first color is the color of the background and the second color is the color of the marking.
Example: “GW” means that the background is Green and marking is White.

4. Types of circuits and color codes

(Table 4)

Type of wire		AVS or AV						AEX	
Type of circuit	Charge	R	WG	–	–	–	–	R	–
	Ground	B	–	–	–	–	–	B	–
	Start	R	–	–	–	–	–	R	–
	Light	RW	RB	RY	RG	RL	–	D	–
	Instrument	Y	YR	YB	YG	YL	YW	Y	Gr
	Signal	G	GW	GR	GY	GB	GL	G	Br
	Others	L	LW	LR	LY	LB	–	L	–
		Br	BrW	BrR	BrY	BrB	–	–	–
		Lg	LgR	LgY	LgB	LgW	–	–	–
		O	–	–	–	–	–	–	–
		Gr	–	–	–	–	–	–	–
		P	–	–	–	–	–	–	–
		Sb	–	–	–	–	–	–	–
		Dg	–	–	–	–	–	–	–
		Ch	–	–	–	–	–	–	–

Method of disassembling and connecting push-pull type coupler

⚠ Before carrying out the following work, loosen the oil filler cap of the hydraulic tank gradually to release the residual pressure from the hydraulic tank.

⚠ Even if the residual pressure is released from the hydraulic tank, some hydraulic oil flows out when the hose is disconnected. Accordingly, prepare an oil receiving container.

Type 1

1. Disconnection

1) Hold adapter (1) and push hose joint (2) into mating adapter (3). (Fig. 1)
   - ★ The adapter can be pushed in about 3.5 mm.
   - ★ Do not hold rubber cap portion (4).
2) After hose joint (2) is pushed into adapter (3), press rubber cap portion (4) against adapter (3) until it clicks. (Fig. 2)
3) Hold hose adapter (1) or hose (5) and pull it out. (Fig. 3)
   - ★ Since some hydraulic oil flows out, prepare an oil receiving container.

Fig. 1

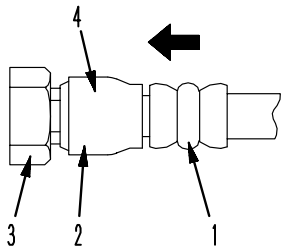

Fig. 2

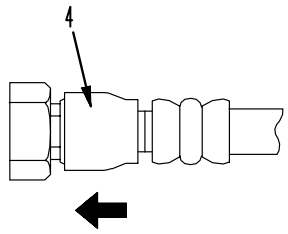

Fig. 3

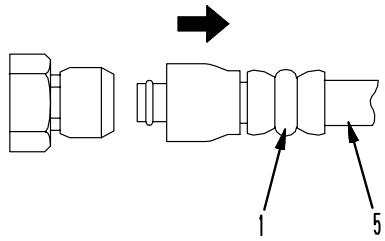

9JS02109

2. Connection

1) Hold hose adapter (1) or hose (5) and insert it in mating adapter (3), aligning them with each other. (Fig. 4)
   - ★ Do not hold rubber cap portion (4).
2) After inserting the hose in the mating adapter perfectly, pull it back to check its connecting condition. (Fig. 5)
   - ★ When the hose is pulled back, the rubber cap portion moves toward the hose about 3.5 mm. This does not indicate abnormality, however.

Fig. 4

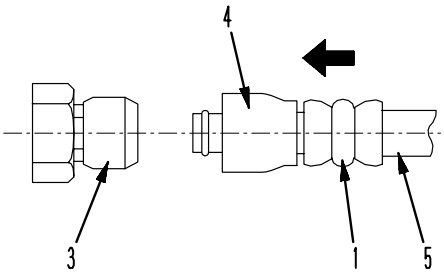

Fig. 5

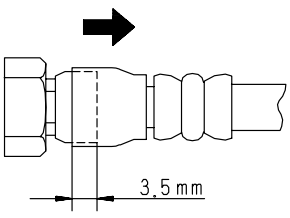

9JS02110

Type 2

1. Disconnection

1) Hold the tightening portion and push body (7) straight until sliding prevention ring (6) contacts contact surface (a) of the hexagonal portion at the male end. (Fig. 6)
2) While holding the condition of Step 1), turn lever (8) to the right (clockwise). (Fig. 7)
3) While holding the condition of Steps 1) and 2), pull out whole body (7) to disconnect it. (Fig. 8)

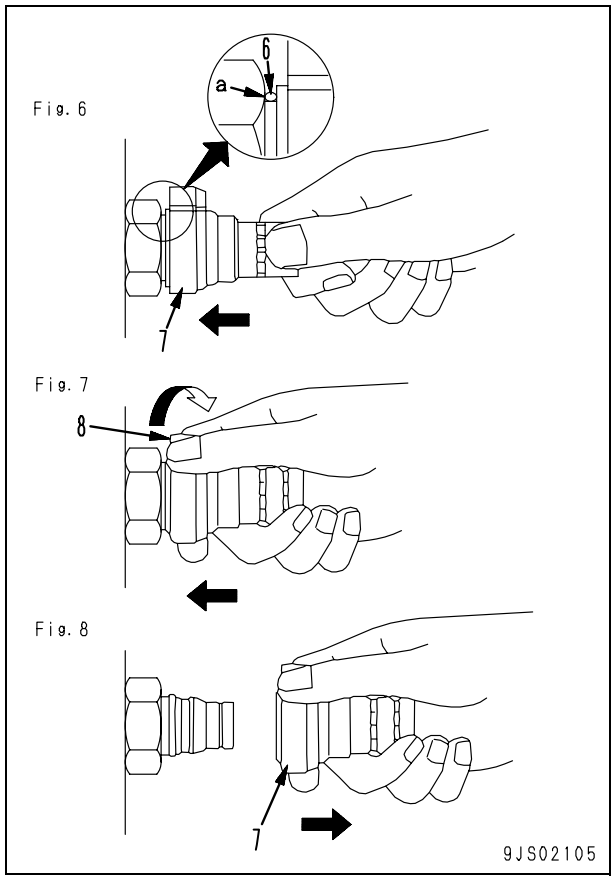

2. Connection

- Hold the tightening portion and push body (7) straight until sliding prevention ring (6) contacts contact surface (a) of the hexagonal portion at the male end. (Fig. 9)

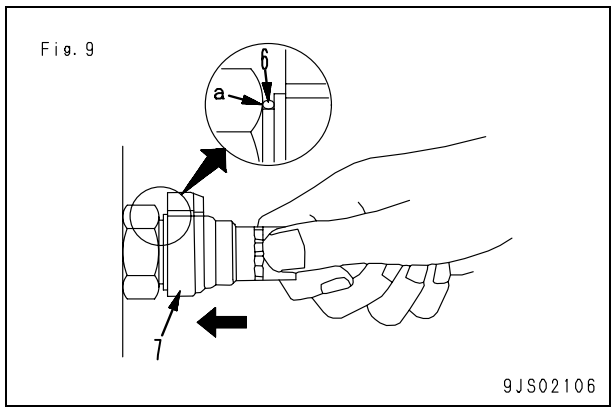

Type 3

1. Disconnection

1) Hold the tightening portion and push body (9) straight until sliding prevention ring (8) contacts contact surface (b) of the hexagonal portion at the male end. (Fig. 10)
2) While holding the condition of Step 1), push cover (10) straight until it contacts contact surface (b) of the hexagonal portion at the male end. (Fig. 11)
3) While holding the condition of Steps 1) and 2), pull out whole body (9) to disconnect it. (Fig. 12)

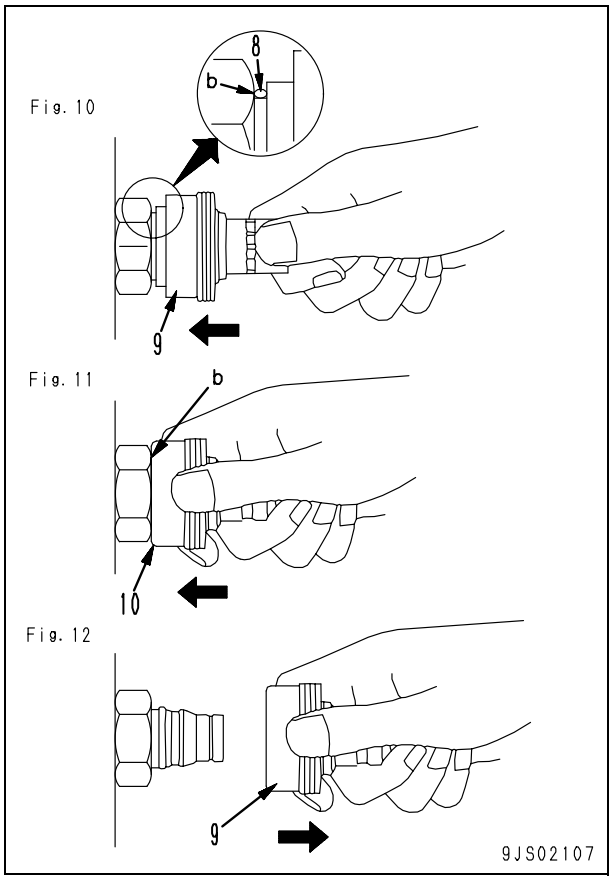

2. Connection

- Hold the tightening portion and push body (9) straight until the sliding prevention ring contacts contact surface (b) of the hexagonal portion at the male end. (Fig. 13)

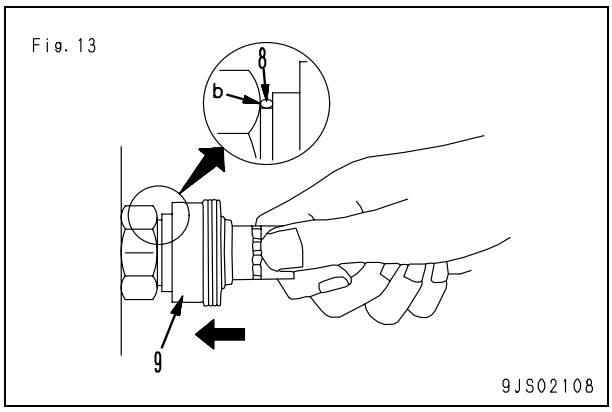

Standard tightening torque table

1. Table of tightening torques for bolts and nuts
   ★ Unless there are special instructions, tighten metric nuts and bolts to the torque below. (When using torque wrench)

   ★ The following table corresponds to the bolts in Fig. A.

Thread diameter of bolt	Width across flats	Tightening torque	
mm	mm	Nm	kgm
6	10	11.8 – 14.7	1.2 – 1.5
8	13	27 – 34	2.8 – 3.5
10	17	59 – 74	6 – 7.5
12	19	98 – 123	10 – 12.5
14	22	153 – 190	15.5 – 19.5
16	24	235 – 285	23.5 – 29.5
18	27	320 – 400	33 – 41
20	30	455 – 565	46.5 – 58
22	32	610 – 765	62.5 – 78
24	36	785 – 980	80 – 100
27	41	1,150 – 1,440	118 – 147
30	46	1,520 – 1,910	155 – 195
33	50	1,960 – 2,450	200 – 250
36	55	2,450 – 3,040	250 – 310
39	60	2,890 – 3,630	295 – 370

   ★ The following table corresponds to the bolts in Fig. B.

Thread diameter of bolt	Width across flats	Tightening torque	
mm	mm	Nm	kgm
6	10	5.9 – 9.8	0.6 – 1.0
8	13	13.7 – 23.5	1.4 – 2.4
10	14	34.3 – 46.1	3.5 – 4.7
12	27	74.5 – 90.2	7.6 – 9.2

★ Fig. A

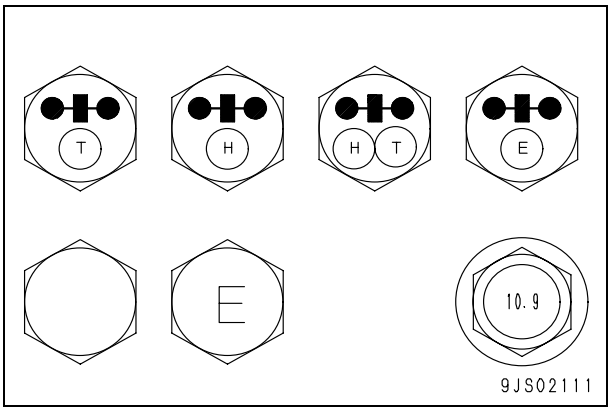

★ Fig. B

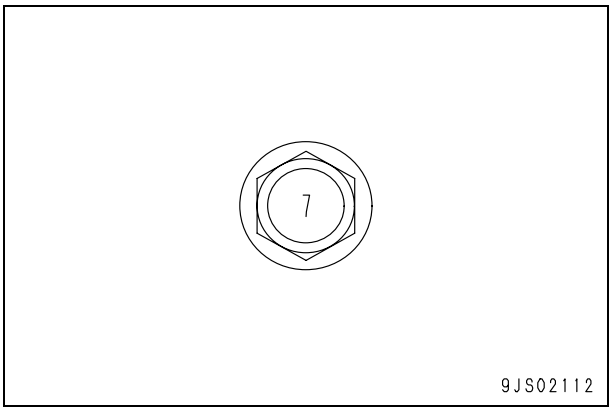

2. Table of tightening torques for split flange bolts

★ Unless there are special instructions, tighten split flange bolts to the torque below.

Thread diameter of bolt	Width across flats	Tightening torque	
mm	mm	Nm	kgm
10	14	59 – 74	6.0 – 7.5
12	17	98 – 123	10.0 – 12.5
16	22	235 – 285	23.5 – 29.5

3. Table of tightening torques for O-ring boss piping joints

★ Unless there are special instructions, tighten O-ring boss piping joints to the torque below.

Nominal No.	Thread diameter	Width across flats	Tightening torque Nm {kgm}	
	mm	mm	Range	Target
02	14	Varies depending on type of connector.	35 – 63 { 3.5 – 6.5}	44 { 4.5}
03,04	20		84 – 132 { 8.5 – 13.5}	103 {10.5}
05,06	24		128 – 186 {13.0 – 19.0}	157 {16.0}
10,12	33		363 – 480 {37.0 – 49.0}	422 {43.0}
14	42		746 – 1,010 {76.0 – 103}	883 {90.0}

4. Table of tightening torques for O-ring boss plugs

★ Unless there are special instructions, tighten O-ring boss plugs to the torque below.

Nominal No.	Thread diameter	Width across flats	Tightening torque Nm {kgm}	
	mm	mm	Range	Target
08	8	14	5.88 – 8.82 {0.6 – 0.9}	7.35 {0.75}
10	10	17	9.81 – 12.74 {1.0 – 1.3}	11.27 {1.15}
12	12	19	14.7 – 19.6 {1.5 – 2.0}	17.64 {1.8}
14	14	22	19.6 – 24.5 {2.0 – 2.5}	22.54 {2.3}
16	16	24	24.5 – 34.3 {2.5 – 3.5}	29.4 {3.0}
18	18	27	34.3 – 44.1 {3.5 – 4.5}	39.2 {4.0}
20	20	30	44.1 – 53.9 {4.5 – 5.5}	49.0 {5.0}
24	24	32	58.8 – 78.4 {6.0 – 8.0}	68.6 {7.0}
30	30	32	93.1 – 122.5 { 9.5 – 12.5}	107.8 {11.0}
33	33	–	107.8 – 147.0 {11.0 – 15.0}	127.4 {13.0}
36	36	36	127.4 – 176.4 {13.0 – 18.0}	151.9 {15.5}
42	42	–	181.3 – 240.1 {18.5 – 24.5}	210.7 {21.5}
52	52	–	274.4 – 367.5 {28.0 – 37.5}	323.4 {33.0}

5. Table of tightening torques for hoses (taper seal type and face seal type)

★ Unless there are special instructions, tighten the hoses (taper seal type and face seal type) to the torque below.

★ Apply the following torque when the threads are coated (wet) with engine oil.

Nominal No. of hose	Width across flats	Tightening torque Nm {kgm}		Taper seal	Face seal	
		Range	Target	Thread size (mm)	Nominal No. - Number of threads, type of thread	Thread diameter (mm) (Reference)
02	19	34 – 54 { 3.5 – 5.5}	44 { 4.5}	–	9/16-18UN	14.3
		34 – 63 { 3.5 – 6.5}		14	–	–
03	22	54 – 93 { 5.5 – 9.5}	74 { 7.5}	–	11/16-16UN	17.5
	24	59 – 98 { 6.0 – 10.0}	78 { 8.0}	18	–	–
04	27	84 – 132 { 8.5 – 13.5}	103 {10.5}	22	13/16-16UN	20.6
05	32	128 – 186 {13.0 – 19.0}	157 {16.0}	24	1-14UNS	25.4
06	36	177 – 245 {18.0 – 25.0}	216 {22.0}	30	1-3/16-12UN	30.2
(10)	41	177 – 245 {18.0 – 25.0}	216 {22.0}	33	–	–
(12)	46	197 – 294 {20.0 – 30.0}	245 {25.0}	36	–	–
(14)	55	246 – 343 {25.0 – 35.0}	294 {30.0}	42	–	–

6. Table of tightening torques for 102, 107 and 114 engine series (Bolts and nuts)

★ Unless there are special instructions, tighten the metric bolts and nuts of the 102, 107 and 114 engine series to the torque below.

Thread size	Tightening torque			
	Bolt		BANJO bolt	
mm	Nm	kgm	Nm	kgm
6	10 ± 2	1.02 ± 0.20	8 ± 2	0.81 ± 0.20
8	24 ± 4	2.45 ± 0.41	10 ± 2	1.02 ± 0.20
10	43 ± 6	4.38 ± 0.61	12 ± 2	1.22 ± 0.20
12	77 ± 12	7.85 ± 1.22	24 ± 4	2.45 ± 0.41
14	–	–	36 ± 5	3.67 ± 0.51

7. Table of tightening torques for 102, 107 and 114 engine series (Eye joints)

★ Unless there are special instructions, tighten the metric eye joints of the 102, 107 and 114 engine series to the torque below.

Thread size	Tightening torque	
mm	Nm	kgm
6	8 ± 2	0.81 ± 0.20
8	10 ± 2	1.02 ± 0.20
10	12 ± 2	1.22 ± 0.20
12	24 ± 4	2.45 ± 0.41
14	36 ± 5	3.67 ± 0.51

8. Table of tightening torques for 102, 107 and 114 engine series (Taper screws)

★ Unless there are special instructions, tighten the taper screws (unit: inch) of the 102, 107 and 114 engine series to the torque below.

Thread size	Tightening torque	
inch	Nm	kgm
1/16	3 ± 1	0.31 ± 0.10
1/8	8 ± 2	0.81 ± 0.20
1/4	12 ± 2	1.22 ± 0.20
3/8	15 ± 2	1.53 ± 0.20
1/2	24 ± 4	2.45 ± 0.41
3/4	36 ± 5	3.67 ± 0.51
1	60 ± 9	6.12 ± 0.92

Conversion table

Method of using the conversion table

The conversion table in this section is provided to enable simple conversion of figures. For details of the method of using the conversion table, see the example given below.

Example: Method of using the conversion table to convert from millimeters to inches

1. Convert 55 mm into inches.

1) Locate the number 50 in the vertical column at the left side, take this as (A), and then draw a horizontal line from (A).
2) Locate the number 5 in the row across the top, take this as (B), then draw a perpendicular line down from (B).
3) Take the point where the two lines cross as (C). This point (C) gives the value when converting from millimeters to inches. Therefore, 55 mm = 2.165 inches.

2. Convert 550 mm into inches.

1) The number 550 does not appear in the table, so divide it by 10 (move the decimal point one place to the left) to convert it to 55 mm.
2) Carry out the same procedure as above to convert 55 mm to 2.165 inches.
3) The original value (550 mm) was divided by 10, so multiply 2.165 inches by 10 (move the decimal point one place to the right) to return to the original value. This gives 550 mm = 21.65 inches.

Millimeters to inches

(B)

1 mm = 0.03937 in

	0	1	2	3	4	5	6	7	8	9
0	0	0.039	0.079	0.118	0.157	0.197	0.236	0.276	0.315	0.354
10	0.394	0.433	0.472	0.512	0.551	0.591	0.630	0.669	0.709	0.748
20	0.787	0.827	0.866	0.906	0.945	0.984	1.024	1.063	1.102	1.142
30	1.181	1.220	1.260	1.299	1.339	1.378	1.417	1.457	1.496	1.536
40	1.575	1.614	1.654	1.693	1.732	1.772	1.811	1.850	1.890	1.929
						(C)				
50	1.969	2.008	2.047	2.087	2.126	2.165	2.205	2.244	2.283	2.323
60	2.362	2.402	2.441	2.480	2.520	2.559	2.598	2.638	2.677	2.717
70	2.756	2.795	2.835	2.874	2.913	2.953	2.992	3.032	3.071	3.110
80	3.150	3.189	3.228	3.268	3.307	3.346	3.386	3.425	3.465	3.504
90	3.543	3.583	3.622	3.661	3.701	3.740	3.780	3.819	3.858	3.898

(A)

Millimeters to inches

1 mm = 0.03937 in

	0	1	2	3	4	5	6	7	8	9
0	0	0.039	0.079	0.118	0.157	0.197	0.236	0.276	0.315	0.354
10	0.394	0.433	0.472	0.512	0.551	0.591	0.630	0.669	0.709	0.748
20	0.787	0.827	0.866	0.906	0.945	0.984	1.024	1.063	1.102	1.142
30	1.181	1.220	1.260	1.299	1.339	1.378	1.417	1.457	1.496	1.536
40	1.575	1.614	1.654	1.693	1.732	1.772	1.811	1.850	1.890	1.929
50	1.969	2.008	2.047	2.087	2.126	2.165	2.205	2.244	2.283	2.323
60	2.362	2.402	2.441	2.480	2.520	2.559	2.598	2.638	2.677	2.717
70	2.756	2.795	2.835	2.874	2.913	2.953	2.992	3.032	3.071	3.110
80	3.150	3.189	3.228	3.268	3.307	3.346	3.386	3.425	3.465	3.504
90	3.543	3.583	3.622	3.661	3.701	3.740	3.780	3.819	3.858	3.898

Kilogram to pound

1 kg = 2.2046 lb

	0	1	2	3	4	5	6	7	8	9
0	0	2.20	4.41	6.61	8.82	11.02	13.23	15.43	17.64	19.84
10	22.05	24.25	26.46	28.66	30.86	33.07	35.27	37.48	39.68	41.89
20	44.09	46.30	48.50	50.71	51.91	55.12	57.32	59.53	61.73	63.93
30	66.14	68.34	70.55	72.75	74.96	77.16	79.37	81.57	83.78	85.98
40	88.18	90.39	92.59	94.80	97.00	99.21	101.41	103.62	105.82	108.03
50	110.23	112.44	114.64	116.85	119.05	121.25	123.46	125.66	127.87	130.07
60	132.28	134.48	136.69	138.89	141.10	143.30	145.51	147.71	149.91	152.12
70	154.32	156.53	158.73	160.94	163.14	165.35	167.55	169.76	171.96	174.17
80	176.37	178.57	180.78	182.98	185.19	187.39	189.60	191.80	194.01	196.21
90	198.42	200.62	202.83	205.03	207.24	209.44	211.64	213.85	216.05	218.26

Liters to U.S. Gallons

1 ℓ = 0.2642 U.S.Gal

	0	1	2	3	4	5	6	7	8	9
0	0	0.264	0.528	0.793	1.057	1.321	1.585	1.849	2.113	2.378
10	2.642	2.906	3.170	3.434	3.698	3.963	4.227	4.491	4.755	5.019
20	5.283	5.548	5.812	6.076	6.340	6.604	6.869	7.133	7.397	7.661
30	7.925	8.189	8.454	8.718	8.982	9.246	9.510	9.774	10.039	10.303
40	10.567	10.831	11.095	11.359	11.624	11.888	12.152	12.416	12.680	12.944
50	13.209	13.473	13.737	14.001	14.265	14.529	14.795	15.058	15.322	15.586
60	15.850	16.115	16.379	16.643	16.907	17.171	17.435	17.700	17.964	18.228
70	18.492	18.756	19.020	19.285	19.549	19.813	20.077	20.341	20.605	20.870
80	21.134	21.398	21.662	21.926	22.190	22.455	22.719	22.983	23.247	23.511
90	23.775	24.040	24.304	24.568	24.832	25.096	25.361	25.625	25.889	26.153

Liters to U.K. Gallons

1 ℓ = 0.21997 U.K.Gal

	0	1	2	3	4	5	6	7	8	9
0	0	0.220	0.440	0.660	0.880	1.100	1.320	1.540	1.760	1.980
10	2.200	2.420	2.640	2.860	3.080	3.300	3.520	3.740	3.950	4.179
20	4.399	4.619	4.839	5.059	5.279	5.499	5.719	5.939	6.159	6.379
30	6.599	6.819	7.039	7.259	7.479	7.699	7.919	8.139	8.359	8.579
40	8.799	9.019	9.239	9.459	9.679	9.899	10.119	10.339	10.559	10.778
50	10.998	11.281	11.438	11.658	11.878	12.098	12.318	12.528	12.758	12.978
60	13.198	13.418	13.638	13.858	14.078	14.298	14.518	14.738	14.958	15.178
70	15.398	15.618	15.838	16.058	16.278	16.498	16.718	16.938	17.158	17.378
80	17.598	17.818	18.037	18.257	18.477	18.697	18.917	19.137	19.357	19.577
90	19.797	20.017	20.237	20.457	20.677	20.897	21.117	21.337	21.557	21.777

kgm to ft.lb

1 kgm = 7.233 ft.lb

	0	1	2	3	4	5	6	7	8	9
0	0	7.2	14.5	21.7	28.9	36.2	43.4	50.6	57.9	65.1
10	72.3	79.6	86.8	94.0	101.3	108.5	115.7	123.0	130.2	137.4
20	144.7	151.9	159.1	166.4	173.6	180.8	188.1	195.3	202.5	209.8
30	217.0	224.2	231.5	238.7	245.9	253.2	260.4	267.6	274.9	282.1
40	289.3	296.6	303.8	311.0	318.3	325.5	332.7	340.0	347.2	354.4
50	361.7	368.9	376.1	383.4	390.6	397.8	405.1	412.3	419.5	426.8
60	434.0	441.2	448.5	455.7	462.9	470.2	477.4	484.6	491.8	499.1
70	506.3	513.5	520.8	528.0	535.2	542.5	549.7	556.9	564.2	571.4
80	578.6	585.9	593.1	600.3	607.6	614.8	622.0	629.3	636.5	643.7
90	651.0	658.2	665.4	672.7	679.9	687.1	694.4	701.6	708.8	716.1
100	723.3	730.5	737.8	745.0	752.2	759.5	766.7	773.9	781.2	788.4
110	795.6	802.9	810.1	817.3	824.6	831.8	839.0	846.3	853.5	860.7
120	868.0	875.2	882.4	889.7	896.9	904.1	911.4	918.6	925.8	933.1
130	940.3	947.5	954.8	962.0	969.2	976.5	983.7	990.9	998.2	1005.4
140	1012.6	1019.9	1027.1	1034.3	1041.5	1048.8	1056.0	1063.2	1070.5	1077.7
150	1084.9	1092.2	1099.4	1106.6	1113.9	1121.1	1128.3	1135.6	1142.8	1150.0
160	1157.3	1164.5	1171.7	1179.0	1186.2	1193.4	1200.7	1207.9	1215.1	1222.4
170	1129.6	1236.8	1244.1	1251.3	1258.5	1265.8	1273.0	1280.1	1287.5	1294.7
180	1301.9	1309.2	1316.4	1323.6	1330.9	1338.1	1345.3	1352.6	1359.8	1367.0
190	1374.3	1381.5	1388.7	1396.0	1403.2	1410.4	1417.7	1424.9	1432.1	1439.4

kg/cm² to lb/in²

1 kg/cm² = 14.2233 lb/in²

	0	1	2	3	4	5	6	7	8	9
0	0	14.2	28.4	42.7	56.9	71.1	85.3	99.6	113.8	128.0
10	142.2	156.5	170.7	184.9	199.1	213.4	227.6	241.8	256.0	270.2
20	284.5	298.7	312.9	327.1	341.4	355.6	369.8	384.0	398.3	412.5
30	426.7	440.9	455.1	469.4	483.6	497.8	512.0	526.3	540.5	554.7
40	568.9	583.2	597.4	611.6	625.8	640.1	654.3	668.5	682.7	696.9
50	711.2	725.4	739.6	753.8	768.1	782.3	796.5	810.7	825.0	839.2
60	853.4	867.6	881.8	896.1	910.3	924.5	938.7	953.0	967.2	981.4
70	995.6	1,010	1,024	1,038	1,053	1,067	1,081	1,095	1,109	1,124
80	1,138	1,152	1,166	1,181	1,195	1,209	1,223	1,237	1,252	1,266
90	1,280	1,294	1,309	1,323	1,337	1,351	1,365	1,380	1,394	1,408
100	1,422	1,437	1,451	1,465	1,479	1,493	1,508	1,522	1,536	1,550
110	1,565	1,579	1,593	1,607	1,621	1,636	1,650	1,664	1,678	1,693
120	1,707	1,721	1,735	1,749	1,764	1,778	1,792	1,806	1,821	1,835
130	1,849	1,863	1,877	1,892	1,906	1,920	1,934	1,949	1,963	1,977
140	1,991	2,005	2,020	2,034	2,048	2,062	2,077	2,091	2,105	2,119
150	2,134	2,148	2,162	2,176	2,190	2,205	2,219	2,233	2,247	2,262
160	2,276	2,290	2,304	2,318	2,333	2,347	2,361	2,375	2,389	2,404
170	2,418	2,432	2,446	2,460	2,475	2,489	2,503	2,518	2,532	2,546
180	2,560	2,574	2,589	2,603	2,617	2,631	2,646	2,660	2,674	2,688
190	2,702	2,717	2,731	2,745	2,759	2,773	2,788	2,802	2,816	2,830
200	2,845	2,859	2,873	2,887	2,901	2,916	2,930	2,944	2,958	2,973
210	2,987	3,001	3,015	3,030	3,044	3,058	3,072	3,086	3,101	3,115
220	3,129	3,143	3,158	3,172	3,186	3,200	3,214	3,229	3,243	3,257
230	3,271	3,286	3,300	3,314	3,328	3,343	3,357	3,371	3,385	3,399
240	3,414	3,428	3,442	3,456	3,470	3,485	3,499	3,513	3,527	3,542

Temperature

Fahrenheit-Centigrade conversion: A simple way to convert a Fahrenheit temperature reading into a Centigrade temperature reading or vice versa is to enter the accompanying table in the center (boldface column) of figures. These figures refer to the temperature in either Fahrenheit or Centigrade degrees.
If it is desired to convert from Fahrenheit to Centigrade degrees, consider the center column to be a table of Fahrenheit temperatures and read the corresponding Centigrade temperature in the column at the left.
If it is desired to convert from Centigrade to Fahrenheit degrees, consider the center column to be a table of Centigrade values, and read the corresponding Fahrenheit temperature on the right.

1°C = 33.8°F

°C		°F	°C		°F	°C		°F	°C		°F
–40.4	**–40**	–40.0	–11.7	**11**	51.8	7.8	**46**	114.8	27.2	**81**	177.8
–37.2	**–35**	–31.0	–11.1	**12**	53.6	8.3	**47**	116.6	27.8	**82**	179.6
–34.4	**–30**	–22.0	–10.6	**13**	55.4	8.9	**48**	118.4	28.3	**83**	181.4
–31.7	**–25**	–13.0	–10.0	**14**	57.2	9.4	**49**	120.2	28.9	**84**	183.2
–28.9	**–20**	–4.0	–9.4	**15**	59.0	10.0	**50**	122.0	29.4	**85**	185.0
–28.3	**–19**	–2.2	–8.9	**16**	60.8	10.6	**51**	123.8	30.0	**86**	186.8
–27.8	**–18**	–0.4	–8.3	**17**	62.6	11.1	**52**	125.6	30.6	**87**	188.6
–27.2	**–17**	1.4	–7.8	**18**	64.4	11.7	**53**	127.4	31.1	**88**	190.4
–26.7	**–16**	3.2	–7.2	**19**	66.2	12.2	**54**	129.2	31.7	**89**	192.2
–26.1	**–15**	5.0	–6.7	**20**	68.0	12.8	**55**	131.0	32.2	**90**	194.0
–25.6	**–14**	6.8	–6.1	**21**	69.8	13.3	**56**	132.8	32.8	**91**	195.8
–25.0	**–13**	8.6	–5.6	**22**	71.6	13.9	**57**	134.6	33.3	**92**	197.6
–24.4	**–12**	10.4	–5.0	**23**	73.4	14.4	**58**	136.4	33.9	**93**	199.4
–23.9	**–11**	12.2	–4.4	**24**	75.2	15.0	**59**	138.2	34.4	**94**	201.2
–23.3	**–10**	14.0	–3.9	**25**	77.0	15.6	**60**	140.0	35.0	**95**	203.0
–22.8	**–9**	15.8	–3.3	**26**	78.8	16.1	**61**	141.8	35.6	**96**	204.8
–22.2	**–8**	17.6	–2.8	**27**	80.6	16.7	**62**	143.6	36.1	**97**	206.6
–21.7	**–7**	19.4	–2.2	**28**	82.4	17.2	**63**	145.4	36.7	**98**	208.4
–21.1	**–6**	21.2	–1.7	**29**	84.2	17.8	**64**	147.2	37.2	**99**	210.2
–20.6	**–5**	23.0	–1.1	**30**	86.0	18.3	**65**	149.0	37.8	**100**	212.0
–20.0	**–4**	24.8	–0.6	**31**	87.8	18.9	**66**	150.8	40.6	**105**	221.0
–19.4	**–3**	26.6	0	**32**	89.6	19.4	**67**	152.6	43.3	**110**	230.0
–18.9	**–2**	28.4	0.6	**33**	91.4	20.0	**68**	154.4	46.1	**115**	239.0
–18.3	**–1**	30.2	1.1	**34**	93.2	20.6	**69**	156.2	48.9	**120**	248.0
–17.8	**0**	32.0	1.7	**35**	95.0	21.1	**70**	158.0	51.7	**125**	257.0
–17.2	**1**	33.8	2.2	**36**	96.8	21.7	**71**	159.8	54.4	**130**	266.0
–16.7	**2**	35.6	2.8	**37**	98.6	22.2	**72**	161.6	57.2	**135**	275.0
–16.1	**3**	37.4	3.3	**38**	100.4	22.8	**73**	163.4	60.0	**140**	284.0
–15.6	**4**	39.2	3.9	**39**	102.2	23.3	**74**	165.2	62.7	**145**	293.0
–15.0	**5**	41.0	4.4	**40**	104.0	23.9	**75**	167.0	65.6	**150**	302.0
–14.4	**6**	42.8	5.0	**41**	105.8	24.4	**76**	168.8	68.3	**155**	311.0
–13.9	**7**	44.6	5.6	**42**	107.6	25.0	**77**	170.6	71.1	**160**	320.0
–13.3	**8**	46.4	6.1	**43**	109.4	25.6	**78**	172.4	73.9	**165**	329.0
–12.8	**9**	48.2	6.7	**44**	111.2	26.1	**79**	174.2	76.7	**170**	338.0
–12.2	**10**	50.0	7.2	**45**	113.0	26.7	**80**	176.0	79.4	**175**	347.0

D155AX-6 Bulldozer

Form No. SEN00599-00

© 2005 KOMATSU
All Rights Reserved
Printed in Japan 12-05 (02)

BULLDOZER

D155AX-6

Machine model	Serial number
D155AX-6	80001 and up

01 Specification

Specification and technical data

Specification and technical data 2
Specification dimension drawings 2
Specifications 3
Weight table 9
Table of fuel, coolant and lubricants 12

Specification and technical data

Specification dimension drawings

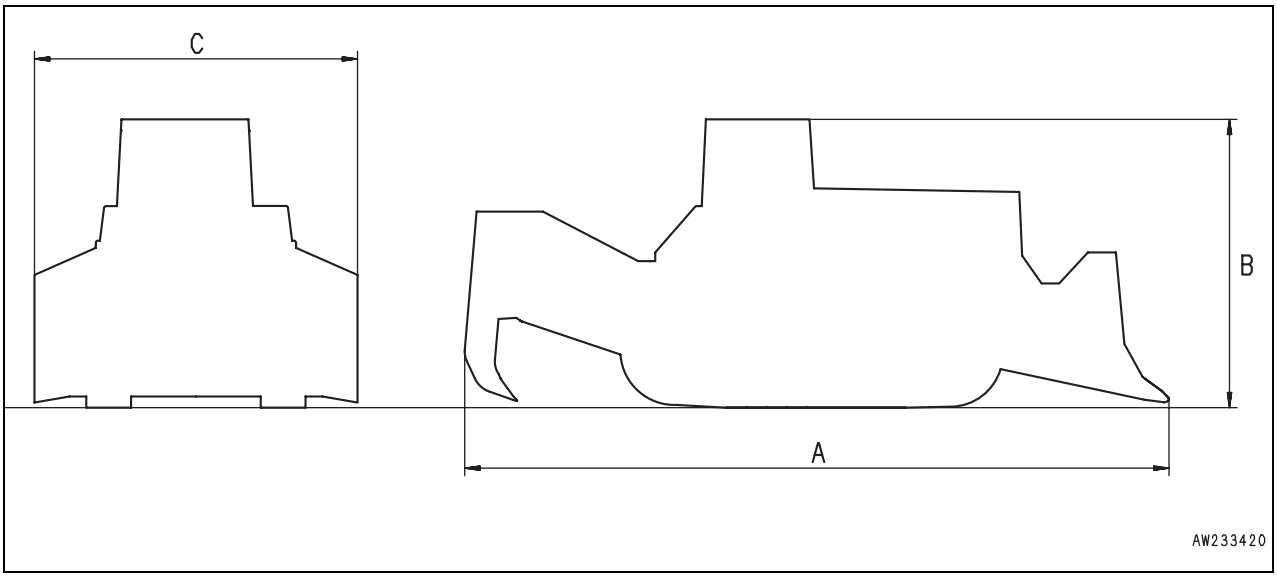

	Item	Unit	Sigma-tilt dozer + Variable multiple shank ripper	Semi U-tilt dozer + Variable multiple shank ripper
A	Overall length	mm	8,285	8,336
B	Overall height (with ROPS)	mm	3,390	3,390
C	Overall width	mm	4,125	4,125

	Item	Unit	Sigma-tilt dozer + Variable giant ripper	Semi U-tilt dozer + Variable giant ripper
A	Overall length	mm	8,285	8,336
B	Overall height (with ROPS)	mm	3,390	3,390
C	Overall width	mm	4,125	4,125

Specifications

Machine model				D155AX-6
Serial number				80001 and up
Weight	• Bare tractor		kg	29,800
	• With Sigma-tilt dozer + variable multi-shank ripper + ROPS cab + air conditioner + 560mm HD shoe + side cover			39,500
	• With semi U-tilt dozer + variable multi-shank ripper + ROPS cab + air conditioner + 560mm HD shoe + side cover			39,650
Performance	Minimum turning radius (F1, center of machine)		mm	2.1
	Gradeability		deg.	30
	Stability (front, rear, left, right)		deg.	35
	Transmission speed ranges	Forward 1st	km/h	3.8
		Forward 2nd		5.6
		Forward 3rd (low speed)		7.5
		Forward 3rd		11.6
		Reverse 1st	km/h	4.6
		Reverse 2nd		6.8
		Reverse 3rd (low speed)		9.2
		Reverse 3rd		14.0
Dimensions	Ground pressure	Bare tractor	kPa {kg/cm²}	79.85 {0.81}
		With Sigma-tilt dozer + variable multi-shank ripper + ROPS cab + air conditioner + side cover		105.84 {1.08}
		With semi U-dozer + variable multi-shank ripper + ROPS + cab + air conditioner + 560mm HD shoe + side cover		105.84 {1.08}
	Overall length	Bare tractor	mm	4,860
		With semi U-tilt dozer + tractor		8,316
		With Sigma-tilt dozer + variable multi-shank ripper		8,285
	Overall width	Bare tractor	mm	2,765
		With semi U-dozer + tractor		4,125
		With Sigma-tilt dozer + variable multi-shank ripper		4,125
	Overall height	To top of exhaust pipe	mm	3,306
		To top of cab (to top of control lever)		2,210
		With ROPS cab installed		3,390

Machine model				D155AX-6
Serial number				80001 and up
Dimensions	Track gauge		mm	2,000
	Length of track on ground			3,050
	Track shoe width (Standard)			560
	Minimum ground clearance (To bottom surface of undercover)			450
Engine	Name			SAA6D140E-5
	Type of engine			4-cycle, water-cooled, in-line, vertical type, direct injection, with turbocharger, aftercooler and (EGR) cooler
	No. of cylinders - Bore x Stroke		mm	6 – 140 x 165
	Piston displacement		ℓ {cc}	15.24 {15,240}
	Performance	Flywheel horsepower	kW {HP}/rpm	239 {320}/1,900
		Max. torque	Nm {kgm}/rpm	1,715 {175}/1,300
		Max. speed at no load	rpm	2,050
		Min. speed at no load	rpm	740
		Min. fuel consumption ratio	g/kWh {g/HPh}	212 {158}
	Starting motor			24V, 11kW
	Alternator			24V, 75A
	Battery			12V, 170Ah x 2
	Radiator core type			Rectangle wave fin
Power train system	Torque converter			3-element, 1-stage, 2-phase
	Transmission			Planetary gear, multiple disc clutch, hydraulically actuated, (electrically type) force-feed lubrication gear pump, forward 3-speed, reverse 3-speed, electrically actuated type
	Hydraulic, HSS pump		MPa {kg/cm^2} ℓ/min	Variable swash plate type (HPV190) Max. delivery pressure: 39.6 {404} Theoretical delivery: 427/2,249
	HSS motor		MPa {kg/cm^2}	Fixed swash plate type (KMF140) Max. pressure: 41.2 {420}
	Bevel gear shaft			Spiral bevel gear, force-feed lubrication gear pump
	HSS	HSS steering system		Differential planetary gear, hydraulic motor drive, electric motorized, hydraulically actuated
		Master brake		Wet type, multiple clutch disc, spring boosted, hydraulically actuated, pedal operated
	Final drive			Spur gear 1-stage, planetary gear 1-stage, splash type lubrication

Machine model					D155AX-6
Serial number					80001 and up
Undercarriage	Suspension				Rigid, balancing beam type
	Carrier roller				2 each side
	Track roller				7 each side
	Track shoe (shoe width: 560 mm)				Assembly type, single grouser, 42 each side, pitch: 228.6 mm
Lubrication pump + power train (tandem)					Gear type (SAR(3)100 + (2)40)
Scavenging pump (tandem)					Gear type (SAR(4) + 140)
Work equipment hydraulic system	Control valve	Variable multi-shark ripper type			1+3+3 tandem spool type, hydraulically assisted type, electrical control
		• For ripper tilt			+ Ripper tilt
		• For ripper lift			+ Ripper lift
		• For blade lift			
		• For blade tilt			+ (Blade lift + blade tilt + steering)
		• For steering			
	Hydraulic cylinder	Type			Reciprocal, piston type
		Dimensions of blade lift	Cylinder bore	mm	110
			Piston rod outer diameter	mm	75
			Max. piston stroke	mm	1,404
			Max. distance between pins	mm	2,093
			Min. distance between pins	mm	687.5
		Dimensions of blade tilt (For sigma-tilt dozer)	Cylinder bore	mm	160
			Piston rod outer diameter	mm	90
			Max. piston stroke	mm	205
			Max. distance between pins	mm	1,395
			Min. distance between pins	mm	1,190
		Dimensions of blade tilt (For semi U-dozer)	Cylinder bore	mm	160
			Piston rod outer diameter	mm	90
			Max. piston stroke	mm	210
			Max. distance between pins	mm	1,475
			Min. distance between pins	mm	1,265

Machine model					D155AX-6
Serial number					80001 and up
Work equipment hydraulic system	Hydraulic cylinder	Dimensions of blade (For sigma-tilt dozer tilt and pitch)	Cylinder bore	mm	160
			Piston rod outer diameter	mm	90
			Max. piston stroke	mm	165
			Max. distance between pins	mm	1,430
			Min. distance between pins	mm	1,265
		Dimensions of ripper lift	Cylinder bore	mm	180
			Piston rod outer diameter	mm	100
			Max. piston stroke	mm	565
			Max. distance between pins	mm	1,730
			Min. distance between pins	mm	1,165
		Dimensions of ripper tilt	Cylinder bore	mm	200
			Piston rod outer diameter	mm	110
			Max. piston stroke	mm	605
			Max. distance between pins	mm	1,815
			Min. distance between pins	mm	1,210
	Hydraulic tank				Box type (control valve externally installed)
Fan drive system	Cooling fan pump			MPa {kg/cm^2} ℓ/min	Variable swash plate (LPV45) Max. delivery pressure: 31.9 {325} Theoretical delivery pressure: 103/2,296
	Cooling fan motor			MPa {kg/cm^2}	Fixed swash plate (LMF65) Max. delivery pressure: 31.9 {325}

Machine model					D155AX-6
Serial number					80001 and up
Work equipment	Type				Hydraulic sigma-tilt dozer Hydraulic semi U-tilt dozer Hydraulic U-tilt dozer
	Blade support method				Brace type (right tilt cylinder)
	Sigma tilt dozer	Performance	Blade lifting height (from ground level)	mm	1,311
			Blade lowering depth (from ground level)	mm	627
			Max. blade tilt	mm	1,000
			Blade cutting angle variation	deg.	± 5
			Blade capacity (SAE)	m^3	9.4
		Dimensions	Blade width	mm	4,130
			Blade height	mm	1,790
			Blade cutting angle	deg.	46
	Semi U-tilt dozer	Performance	Blade lifting height (from ground level)	mm	1,250
			Blade lowering depth (from ground level)	mm	590
			Max. blade tilt	mm	1,000
			Blade cutting angle variation	deg.	± 6
			Blade capacity (SAE)	m^3	9.4
		Dimensions	Blade width	mm	4,130
			Blade height	mm	1,790
			Blade cutting angle	deg.	52
	Full U-dozer	Performance	Blade lifting height (from ground level)	mm	1,250
			Blade lowering depth (from ground level)	mm	590
			Max. blade tilt	mm	1,080
			Blade cutting angle variation	deg.	± 6
			Blade capacity (SAE)	m^3	11.9
		Dimensions	Blade width	mm	4,225
			Blade height	mm	1,790
			Blade cutting angle	deg.	52

Machine model					D155AX-6
Serial number					80001 and up
Work equipment	Sigma-tiltd ozer + pitch	Performance	Max. tilt	mm	1,000
			Max. pitch angle	deg.	5
			Max. pitch-back angle	deg.	5
	Semi U-tilt dozer + pitch	Performance	Max. tilt	mm	1.000
			Max. pitch angle	deg.	5
			Max. pitch-back angle	deg.	5
	Full U-dozer + pitch	Performance	Max. tilt	mm	1,080
			Max. pitch angle	deg.	5
			Max. pitch-back angle	deg.	5
	Variable multi-shank ripper	Performance	Max. digging depth	mm	903
			Max. lifting height	mm	950
			Ripping angle of point		30 – 70
		Dimensions	Max. beam width	mm	2,320
			Shank positions		2
	Variable giant ripper	Performance	Max. digging depth	mm	1,255
			Max. lifting height	mm	950
			Ripping angle of point		30 – 70
		Dimensions	Max. beam width	mm	1,401
			Shank positions	No. of holes	3

Weight table

⚠ This weight table is for reference in handling or transporting components.

Machine model	D155AX-6
Serial number	80001 and up
Engine, damper assembly	1,900
• Engine assembly	1,759
• Damper assembly	120
• Universal joint	18
• Engine mount parts (wiring)	3
Radiator assembly (including built-in oil cooler hydraulic cooler and codenser)	333
Fuel tank assembly (when empty)	383
Fuel tank assembly (when full)	913
Power train unit assembly	2,351
• Torque converter, PTO assembly	500
• Transmission assembly	625
• HSS assembly	932
• Brake valve assembly (2-ECMV assembly, secondary brake valve)	6
• Power train filter assembly	16.5
• Scavenging pump	20
• Power train, lubrication pump	28
• Hydraulic HSS pump	106
• HSS motor	67
• Coolong fan pump	25
• Coolong fan motor	25
Final drive assembly	1,395 x 2
Sprocket teeth	(12 x 9) x 2
Hull frame assembly	4,426
Track group assembly (each side)	3,822
• Track frame	1,340
• Idler assembly	326
• Recoil spring assembly	508
• Bogie, track roller assembly	525 x 3
• Track roller assembly (single flange x1) (double flange x1)	93 x 4 105 x 3
• Carrier roller assembly	45 x 2

Machine model	D155AX-6
Serial number	80001 and up
Track shoe assembly (560 mm, wet type)	2,260 x 2
Pivot shaft assembly (Left) (When dual tilt spcification, Left and right)	119
Pivot shaft assembly (Right)	136
Equalizer bar	231
Hydraulic tank assembly (including hydraulic filter)	99
Control valve (Blade lift + blade tilt + ripper lift + ripper tilt + steering)	123
Engine underguard	220
Transmission underguard	280
Operatorís seat	55
Sigma U-tilt dozer assembly	5,364 (Standard 4,937)
• Blade	3,200 (Standard 2,929)
• Straight frame	1,687 (Standard 1,531)
• Tilt brace	97 x 1
• Center brace	250 x 1
• Tilt cylinder assembly	130
Sigma dual-tilt dozer assembly	5,400 (Standard 4,973)
• Blade	3,200 (Standard 2,929)
• Straight frame	1,690 (Standard 1,534)
• Center brace	250 x 1
• Pitch cylinder assembly	130 x 2
Semi U-tilt dozer assembly	5,623 (Standard 4,962)
• Blade	3,459 (Standard 2,954)
• Straight frame	1,687 (Standard 1,531)
• Tilt brace	97 x 1
• Center brace	250 x 1
• Tilt cylinder assembly	130
Blade lift cylinder assembly	165 x 2
Multi-shank ripper assembly	4,330
• Bracket, beam, arm	2,300
• Shank	266 x 3
• Lift cylinder assembly	184 x 1
• Tilt cylinder assembly	252 x 1

Machine model	D155AX-6
Serial number	80001 and up
Giant ripper assembly	3,090
• Bracket, beam, arm	1,850
• Shank	333 x 1
• Lift cylinder assembly	184 x 1
• Tilt cylinder assembly	252 x 1
• Pin puller cylinder assembly	7
Cab assembly	410
Dashboard	54
Floor frame (including air conditioner unit)	611
Side cover	20
Air conditioner unit assembly	10

Table of fuel, coolant and lubricants

★ For details of the notes (Note 1, Note 2 - - -) in the table, see Operation and Maintenance Manual.

Reservoir	Fluid Type	Ambient Temperature, degrees Celsius -22 -4 14 32 50 68 86 104 122°F -30 -20 -10 0 10 20 30 40 50°C	Recommended Komatsu Fluids
Engine oil pan	Engine oil		Komatsu EOS0W30
			Komatsu EOS5W40
			Komatsu EO10W30-DH
			Komatsu EO15W40-DH
			Komatsu EO30-DH
Power train oil pan (incl. Transmission,torque converter and bevel gear case)	Powertrain oil (Note.2)		TO10
			TO30
Final drive case (each) Damper case	Powertrain oil		TO30
Hydraulic system	Powertrain oil		TO10
	Hydraulic oil		HO46-HM
	Engine oil		Komatsu EO10W30-DH
			Komatsu EO15W40-DH
Grease fitting	Hyper grease (Note.3)		G2-T,G2-TE
	Lithium EP grease		G2-LI
Cooling system	Supercoolant AF-NAC (Note.4)		AF-NAC
Fuel tank	Diesel fuel		ASTM Grade No.1-D S15 ASTM Grade No.1-D S500 ASTM Grade No.2-D S15 ASTM Grade No.2-D S500

Unit: ℓ

Refilling points	D155AX-6	
	Specified capacity	Refill capacity
Engine oil pan	45	37
Damper case	1.5	1.5
Power train case	130	90
Fainal drive case (each)	31	31
Hydraulic system (with blade, without ripper)	240	85
Cooling system (including reservoir tank)	82	—
Fuel tank	625	—

D155AX-6 Bulldozer
Form No. SEN00601-00

© 2005 KOMATSU
All Rights Reserved
Printed in Japan 12-05 (02)

BULLDOZER

D155AX-6

Machine model	Serial number
D155AX-6	80001 and up

10 Structure, function and maintenance standard

Engine and cooling system

Engine and cooling system 2
Radiator, oil cooler 2
Engine mount 5
Cooling fan pump 6
Cooling fan motor 14

Engine and cooling system

Radiator, oil cooler

Radiator

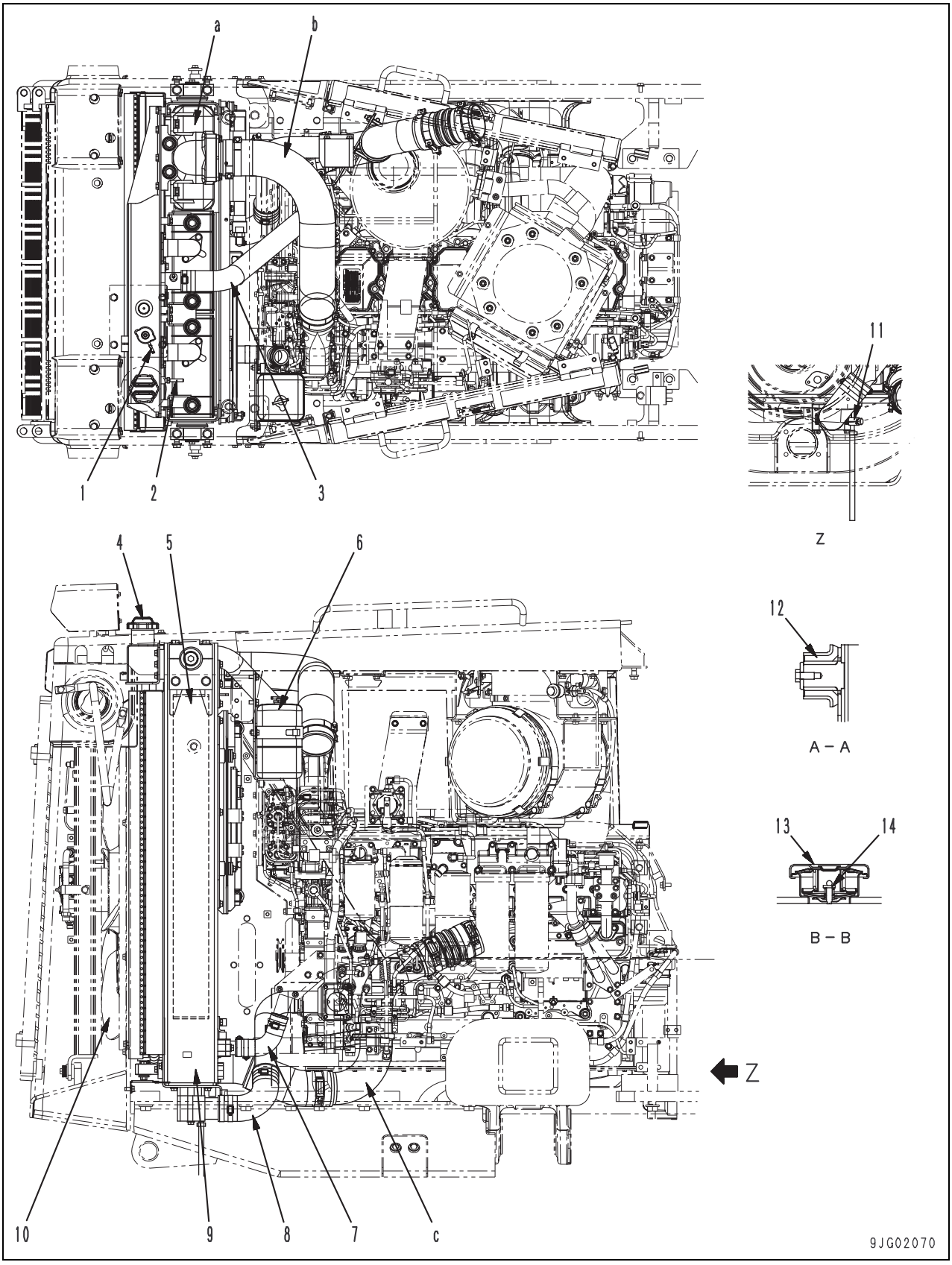

1. Overflow hose
2. Air bleed hose
3. Inlet hose
4. Coolant filler cap
5. Radiator core assembly
6. Reservoir tank
7. Inlet hose (for circulating at low coolant temperature)
8. Outlet hose
9. Lower tank (power train oil cooler built-in)
10. Fan
11. Drain plug
12. Cushion
13. Breather cap
14. Pressure valve

a: Aftercooler
b: Aftercooler outlet hose
c: Aftercooler inlet hose

Outline

- The reservoir tank is provided for radiator.
- The power train oil cooler is built in the lower tank of the radiator.

			Radiator
Core type			Rectangle wave fin
Fin pitch		(mm)	4.0
Heat dissipation area		(m^2)	41.99 x 2
Pressure valve	Relief pressure	(MPa {kg/cm^2})	0.09 {0.9}
	Vacuum pressure	(MPa {kg/cm^2})	0.005 {0.05}

Specification

Aftercooler: Rectangle wave fin 8.0/2P

Oil cooler

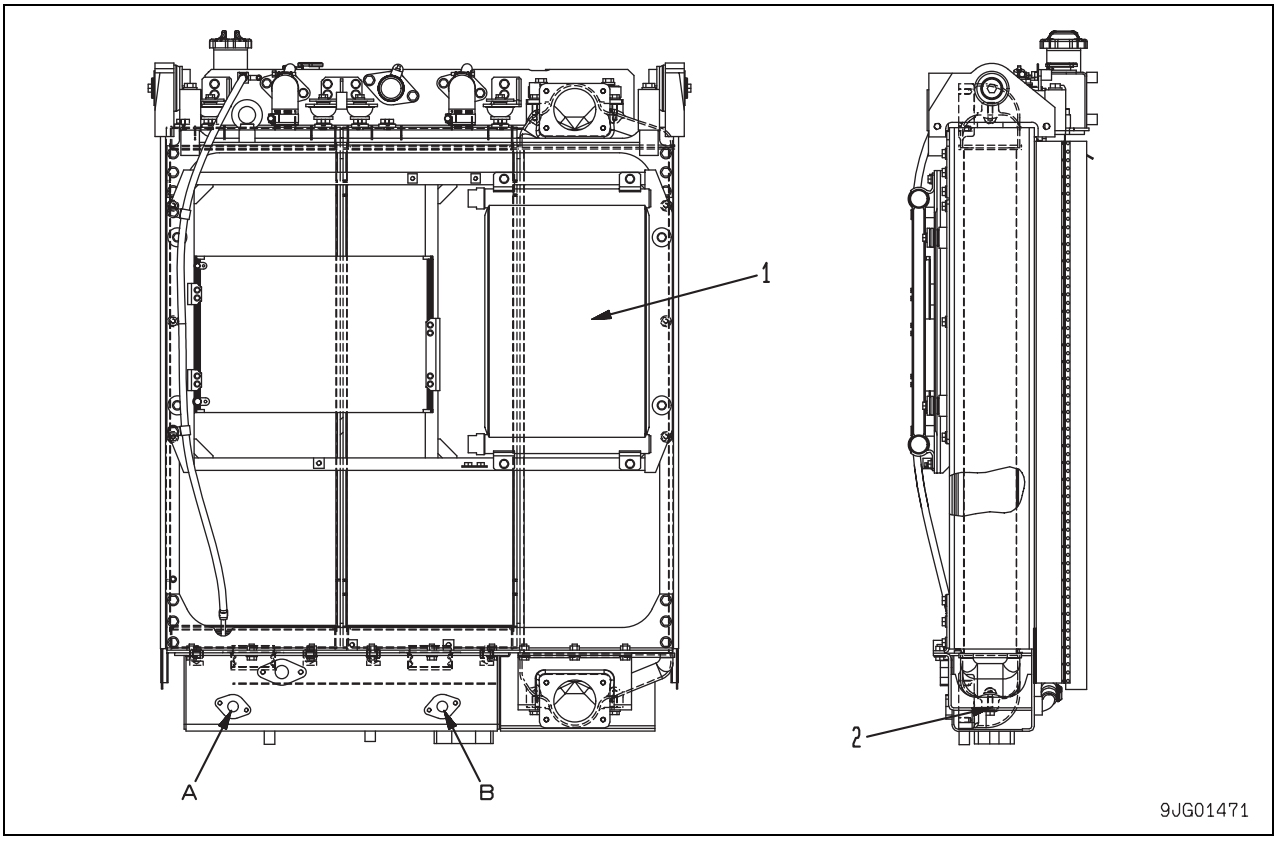

1. Hydraulic cooler
2. Power train oil cooler

A: Power train oil cooler outlet port
B: Power train oil cooler inlet port

Outline

- The power train oil cooler is built in the lower tank of the radiator.

	Power train oil cooler	Hydraulic cooler
Core type	PTO-OL	Rectangle wave (4.0P)
Inner fin type	TF8-C	TF6-P
Cooling method	Built in lower tank	Air cooled
Heat dissipation area (m^2)	2.47	4.51

Engine mount

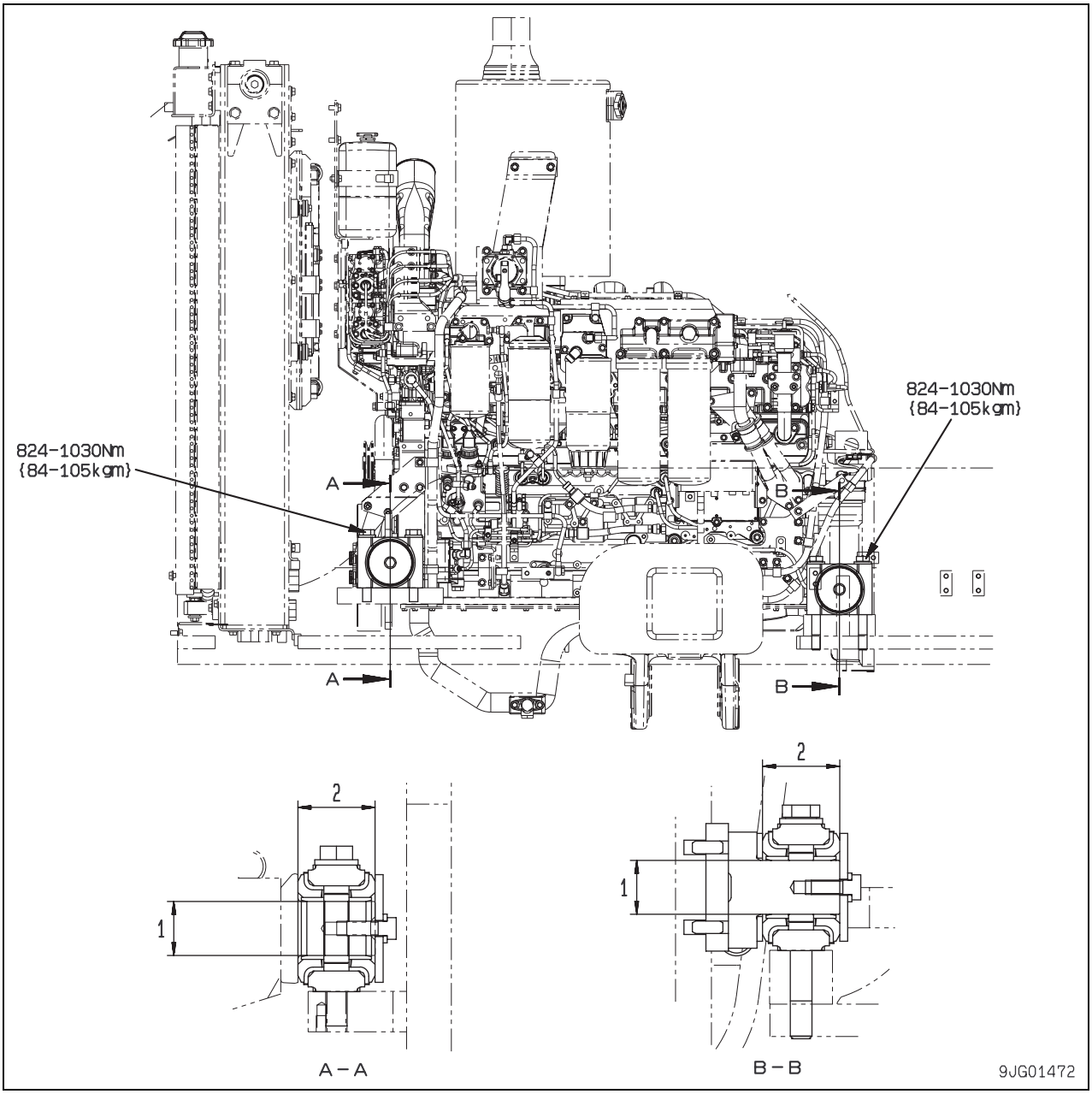

Unit: mm

No.	Check item	Criteria					Remedy
1	Clearance between bracket and cushion	Standard size	Tolerance		Standard clearance	Clearance limit	Replace
			Shaft	Hole			
		60	–0.1 –0.3	+0.046 0	0.1 – 0.346	—	
2	Free height of mount rubber	Standard clearance			Clearance limit		
		86			84		

Cooling fan pump

Type: LPV45

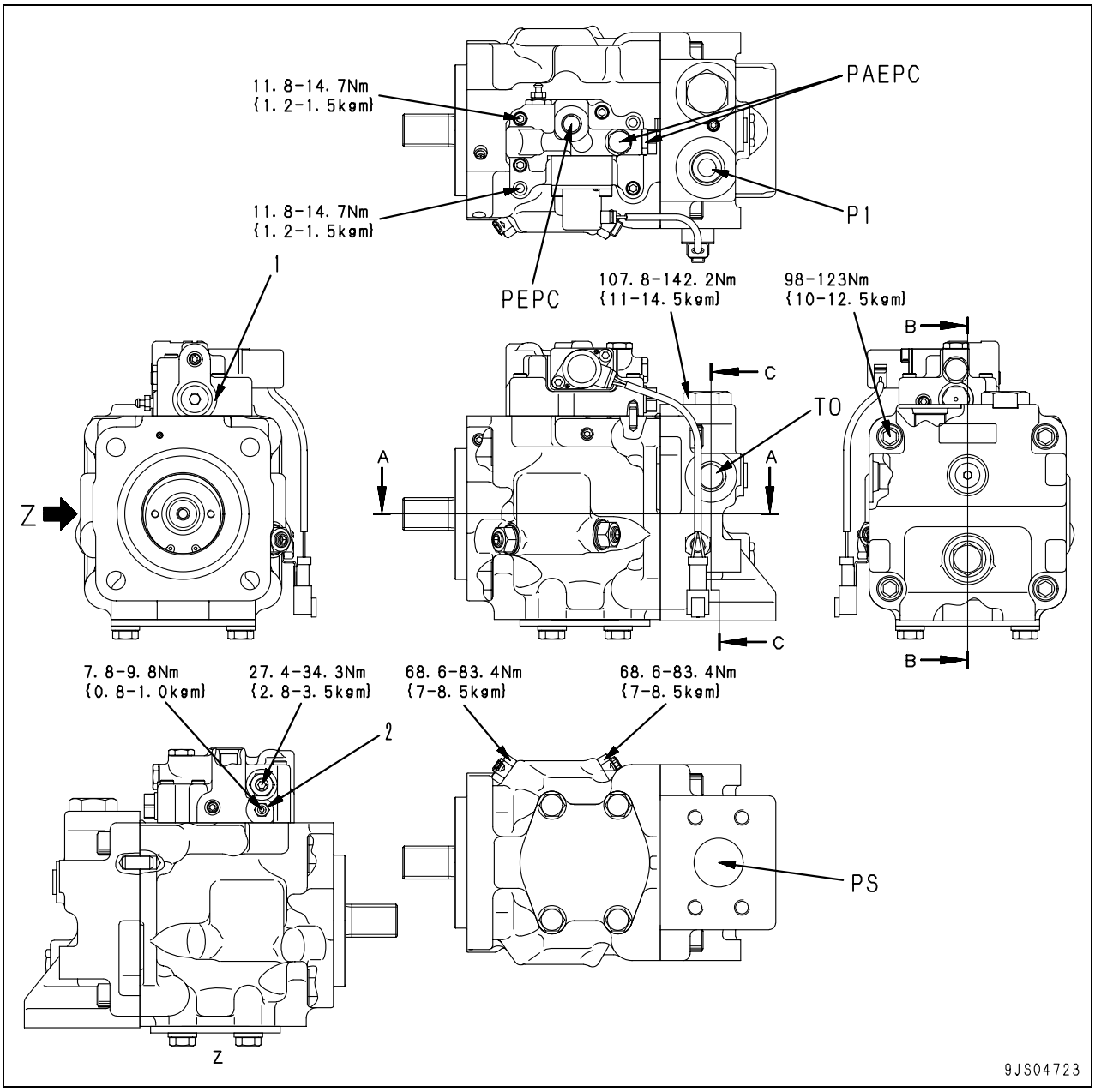

P1: Pump discharge port
PAEPC: EPC output pressure pickup plug
PEPC: EPC valve basic pressure input port
PS: Pump suction port
TO: Drain port

1. Servo valve
2. Air bleeder

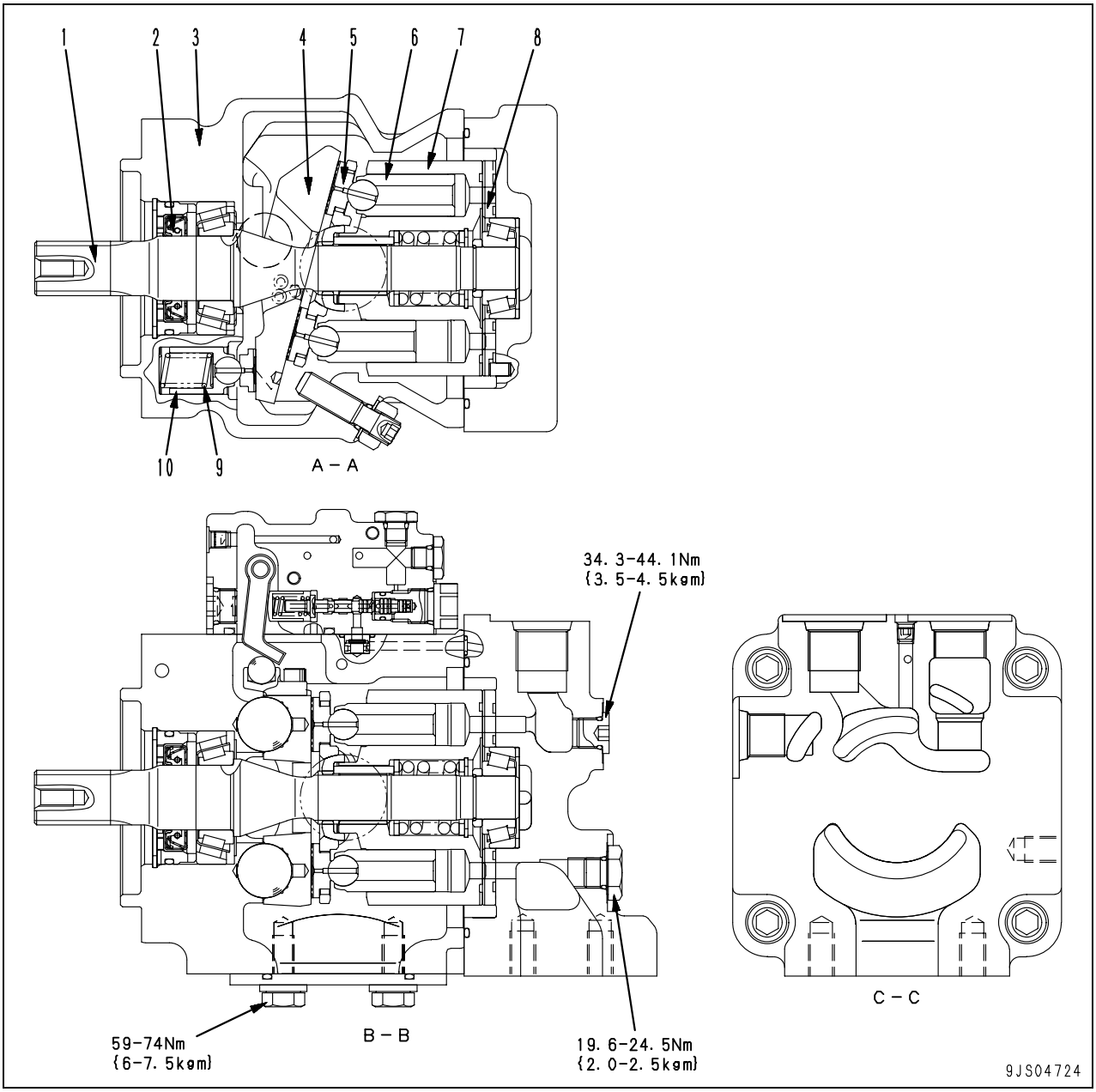

1. Shaft
2. Oil seal
3. Case
4. Rocker cam
5. Shoe
6. Piston
7. Cylinder block
8. Valve plate
9. Spring
10. Servo piston

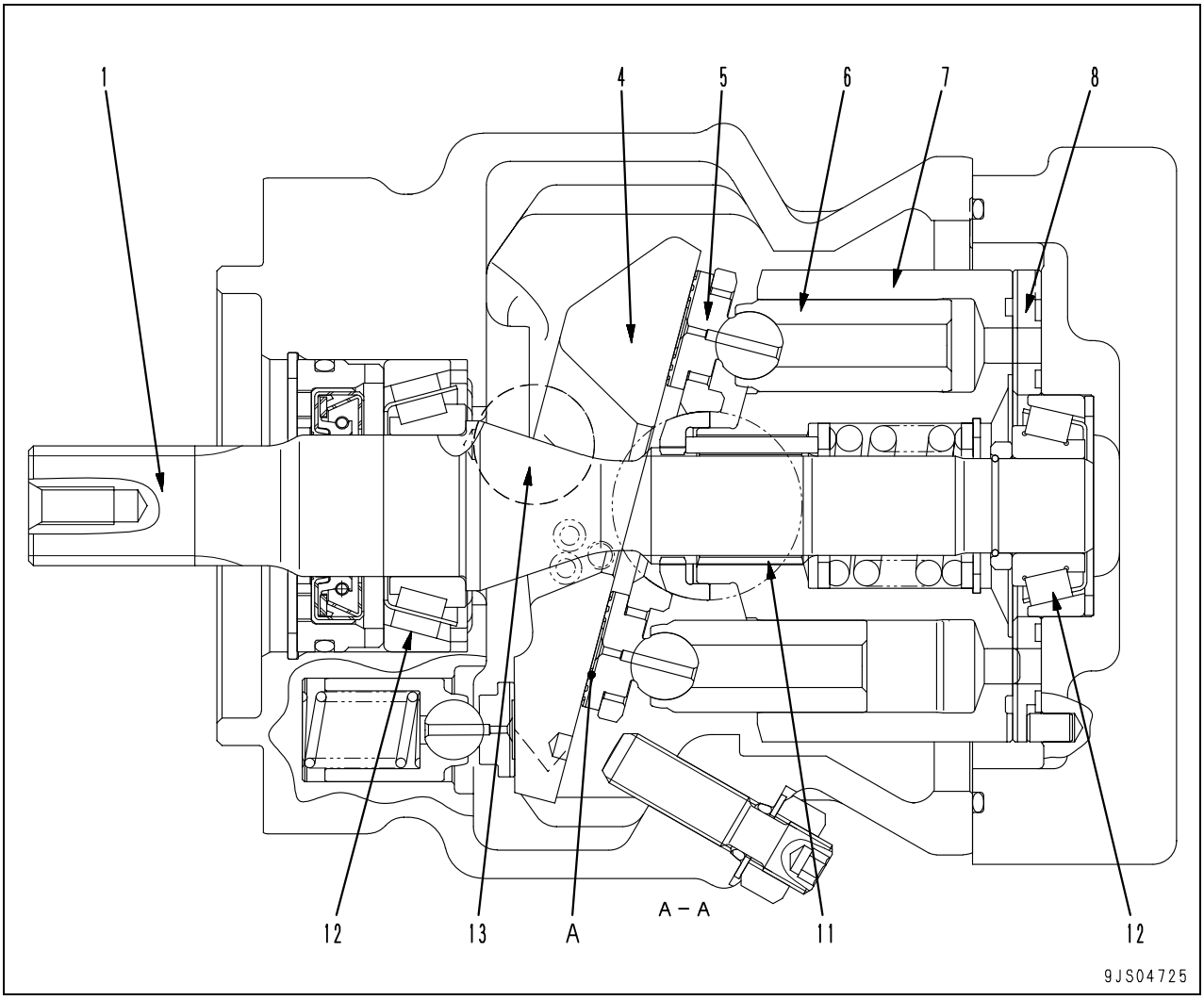

Function

- The pump converts the engine rotation transmitted to its shaft to oil pressure and delivers pressurized oil corresponding to the load.
- It is possible to change the delivery by changing the swash plate angle.

Structure

- Cylinder block (7) is supported to shaft by spline (11).
- Shaft (1) is supported with front and rear bearings (12).
- The end of piston (6) has a spherical hollow and is combined with shoe (5).
- Piston (6) and shoe (5) form a spherical bearing.
- Shoe (5) is kept pressed against plane (A) of rocker cam (4) and slid circularly.
- Rocker cam (4) slides around ball (13).
- Piston (6) carries out relative movement in the axial direction inside each cylinder chamber of cylinder block (7).
- Cylinder block (7) seals the pressurized oil to valve plate (8) and carries out relative rotation.
- This surface is designed so that the oil pressure balance is maintained at a suitable level.
- The oil inside each cylinder chamber of cylinder block (7) is suctioned and discharged through valve plate (8).

Operation of pump

- Cylinder block (7) rotates together with shaft (1), and shoe (5) slides on flat surface (A).
- At this time, rocker cam (4) slants around ball (13). As a result, angle (a) between center line (X) of rocker cam (4) and the axis of cylinder block (7) changes.
- Angle (a) is called the swash plate angle.

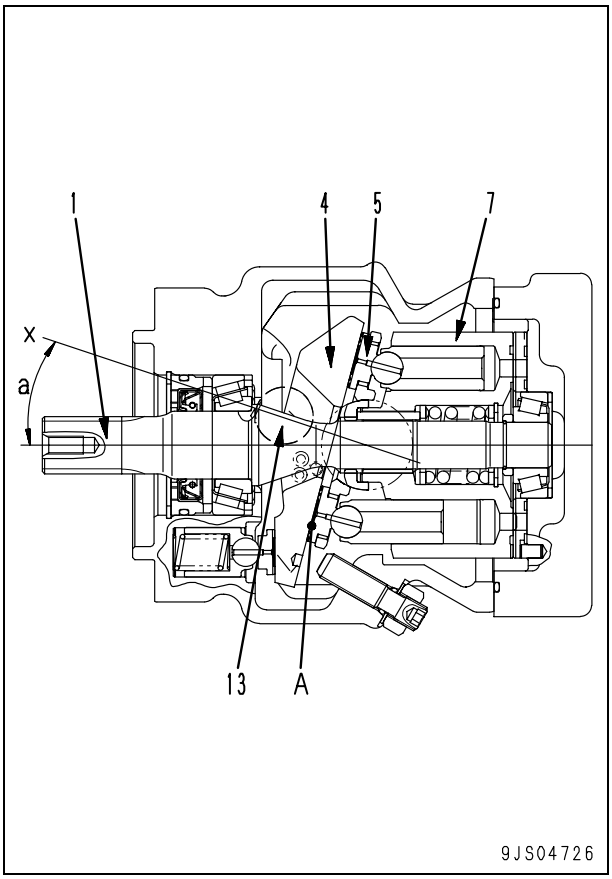

- With the condition of center line (X) of rocker cam (4) has swash plate angle (a) to axial direction of cylinder block (7), flat surface (A) functions as cam against shoe (5).
- In this way, piston (6) slides on the inside of cylinder block (7), so a difference between volumes (E) and (F) is created inside cylinder block (7).
- A single piston (6) sucks and discharges the oil by the amount (F) - (E).
- As cylinder block (7) rotates and the volume of chamber (E) becomes smaller, the pressurized oil is discharged.
- On the other hand, the volume of chamber (F) grows larger and, in this process, the oil is suctioned.

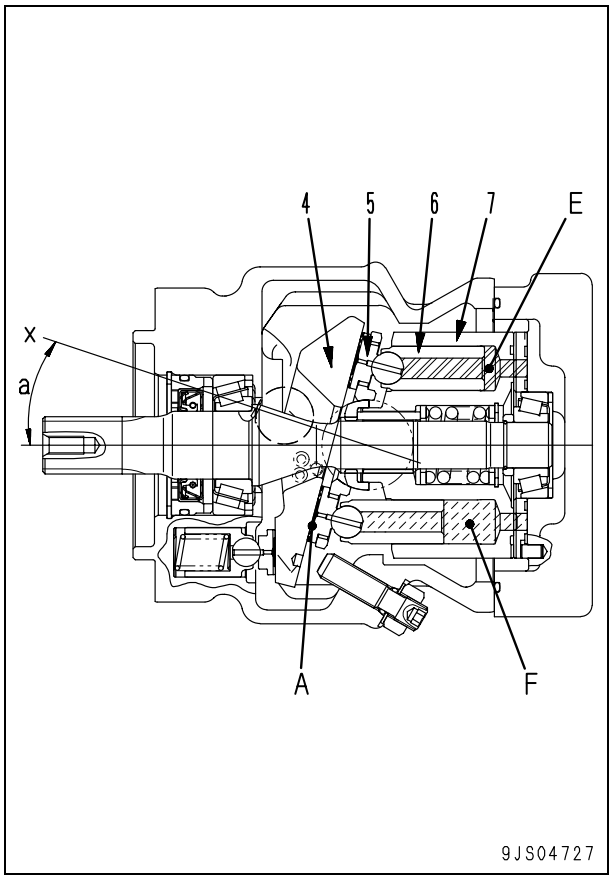

- As center line (X) of rocker cam (4) matches the axial direction of cylinder block (7) (swash plate angle (a) = 0), the difference between volumes (E) and (F) inside cylinder block (7) becomes 0.
- Suction and discharge of pressurized oil is not carried out in this state. Namely pumping action is not performed. (Actually, however, the swash plate angle is not set to 0)

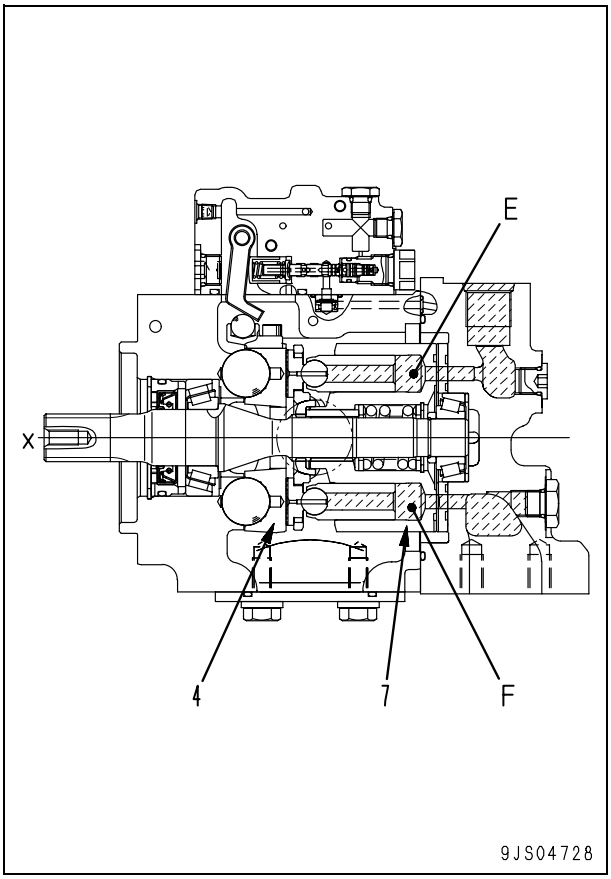

- Swash plate angle (a) is in proportion to the pump delivery.

Control of delivery

- If the swash plate angle (a) becomes larger, the difference between volumes (E) and (F) becomes larger and pump delivery (Q) increases.
- Swash plate angle (a) is changed with servo piston (10).
- Servo piston (10) reciprocates straight according to the signal pressure of the servo valve.
- This straight motion is transmitted to rocker cam (4).
- Rocker cam (4) supported with ball (13) slides around ball (13).

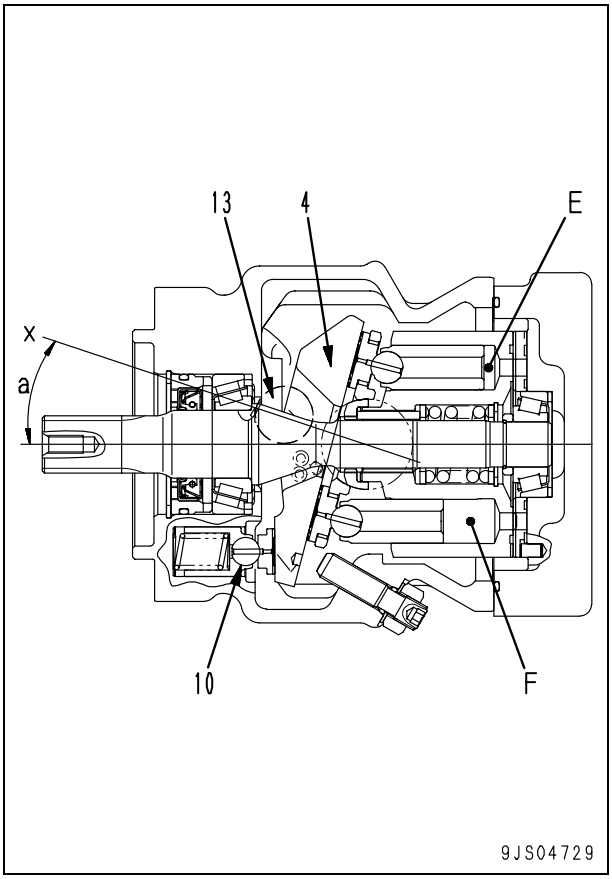

Servo valve

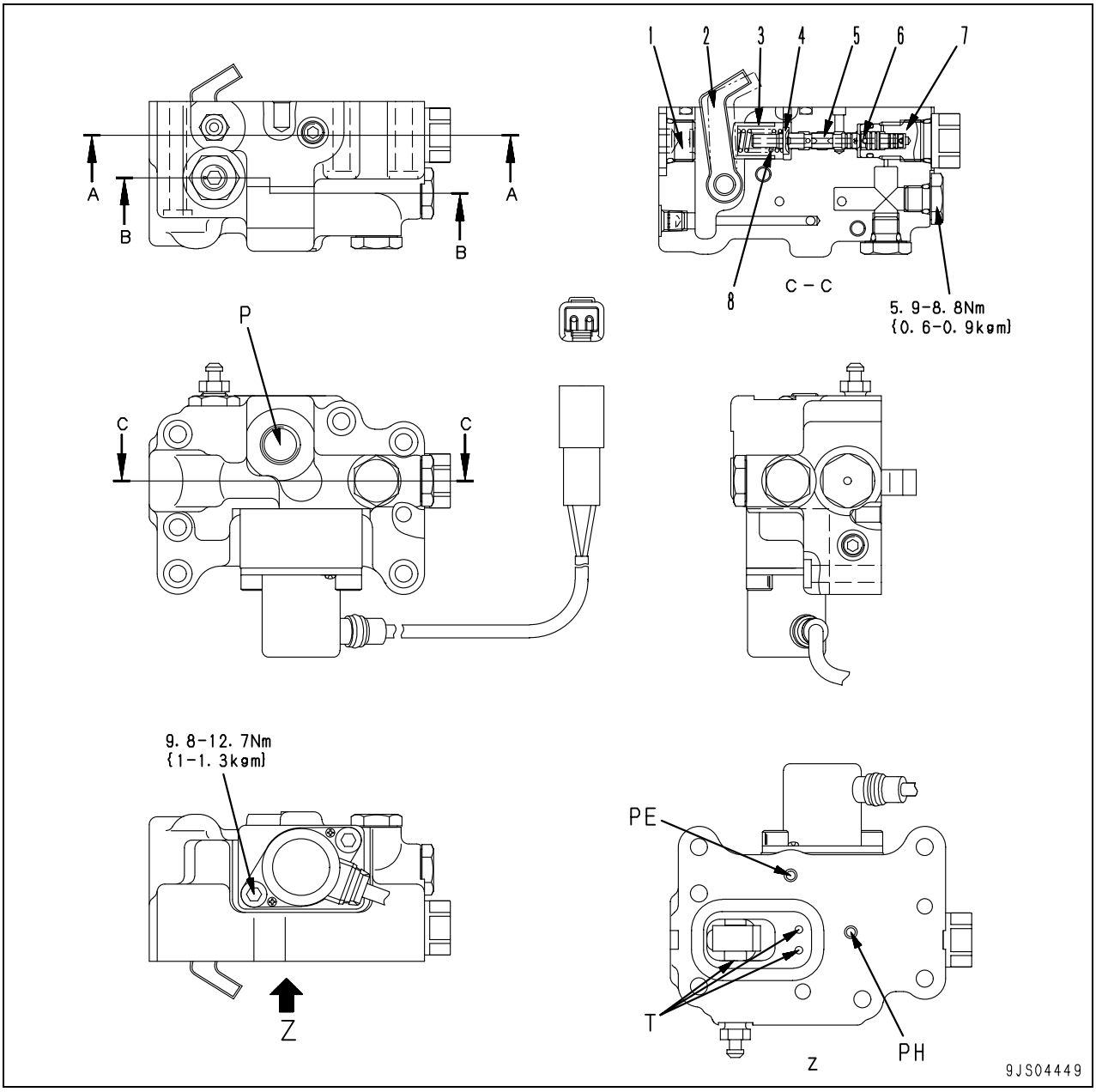

P: EPC valve basic pressure
PE: Control piston pressure
PH: Pump discharge pressure
T: Drain port

1. Plug
2. Lever
3. Retainer
4. Seat
5. Spool
6. Piston
7. Sleeve
8. Spring

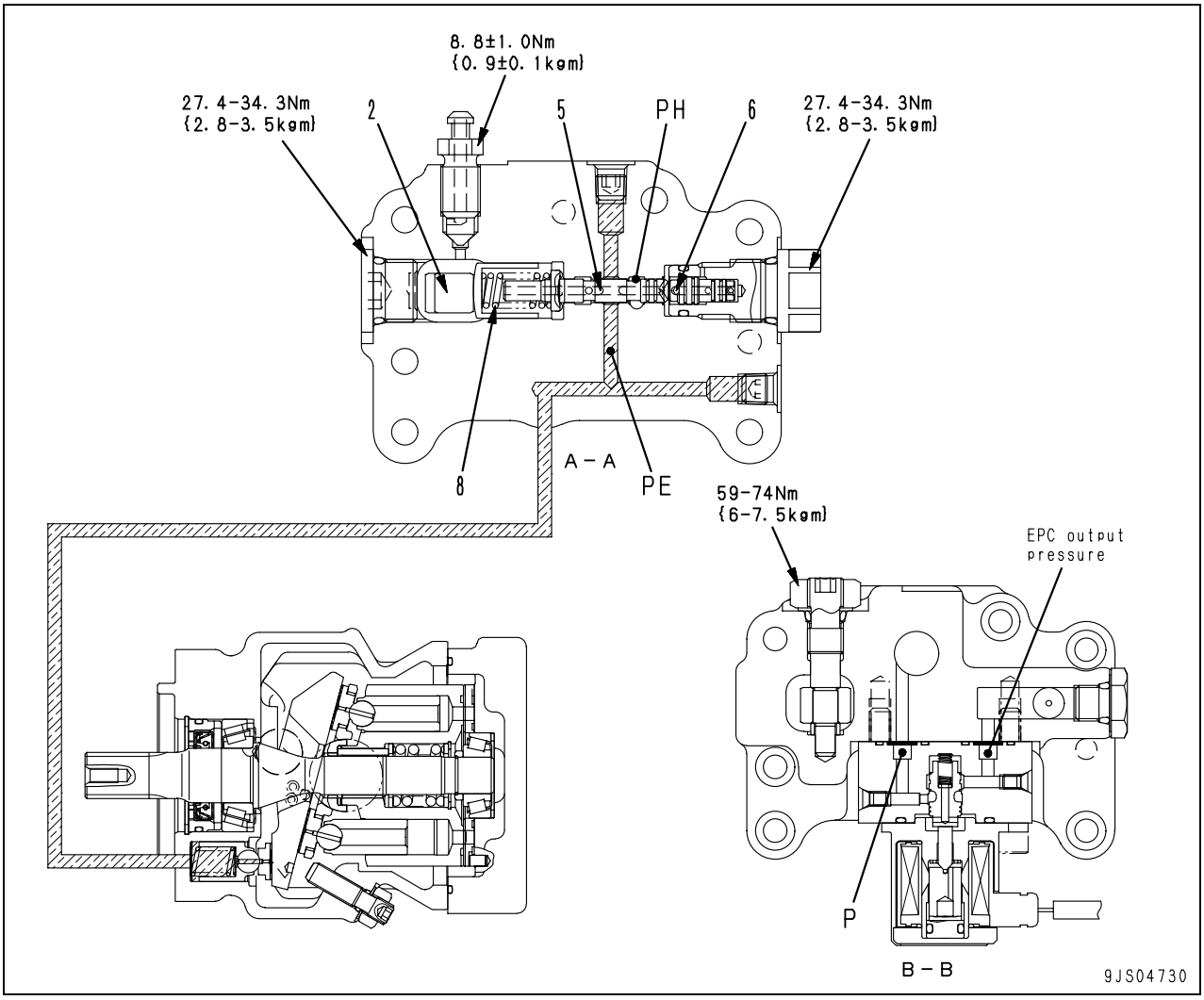

Function

- The servo valve controls the current input to the EPC valve and the pump delivery (Q) so that they will be related as shown in the diagram.

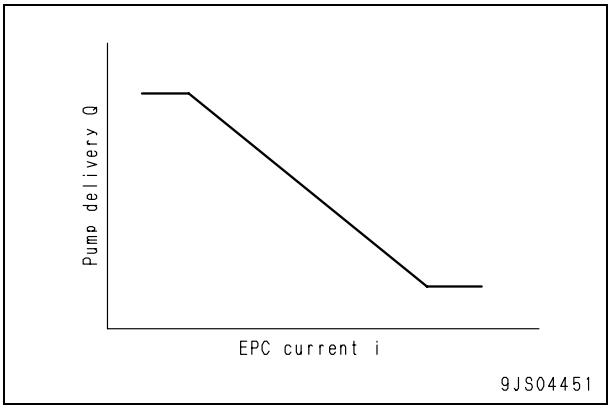

- The output pressure of the EPC valve flows in the piston chamber to push piston (6).
- Piston (6) pushes spool (5) until it is balanced with the spring.
- Then, the land of the servo piston pressure passage is connected to the pump discharge passage by the notch of spool (5) and the discharge pressure is led to the servo piston.
- When the rocker cam is pushed up by the servo piston, a position feedback is applied and lever (2) moves to compress spring (8).
- When spool (5) is pushed back, the pump discharge circuit and the servo piston circuit are cut off.
- Pressure in the servo piston chamber drops and the rocker cam returns in the direction of a maximum swash plate angle.
- These processes are repeated until the swash plate is fixed to a position where the EPC output pressure is balanced with spring (8) force.
- The greater the EPC output pressure, the smaller the swash plate angle. Conversely, the smaller the EPC output pressure, the greater the swash plate angle.

Cooling fan motor

Type: LMF110(65)

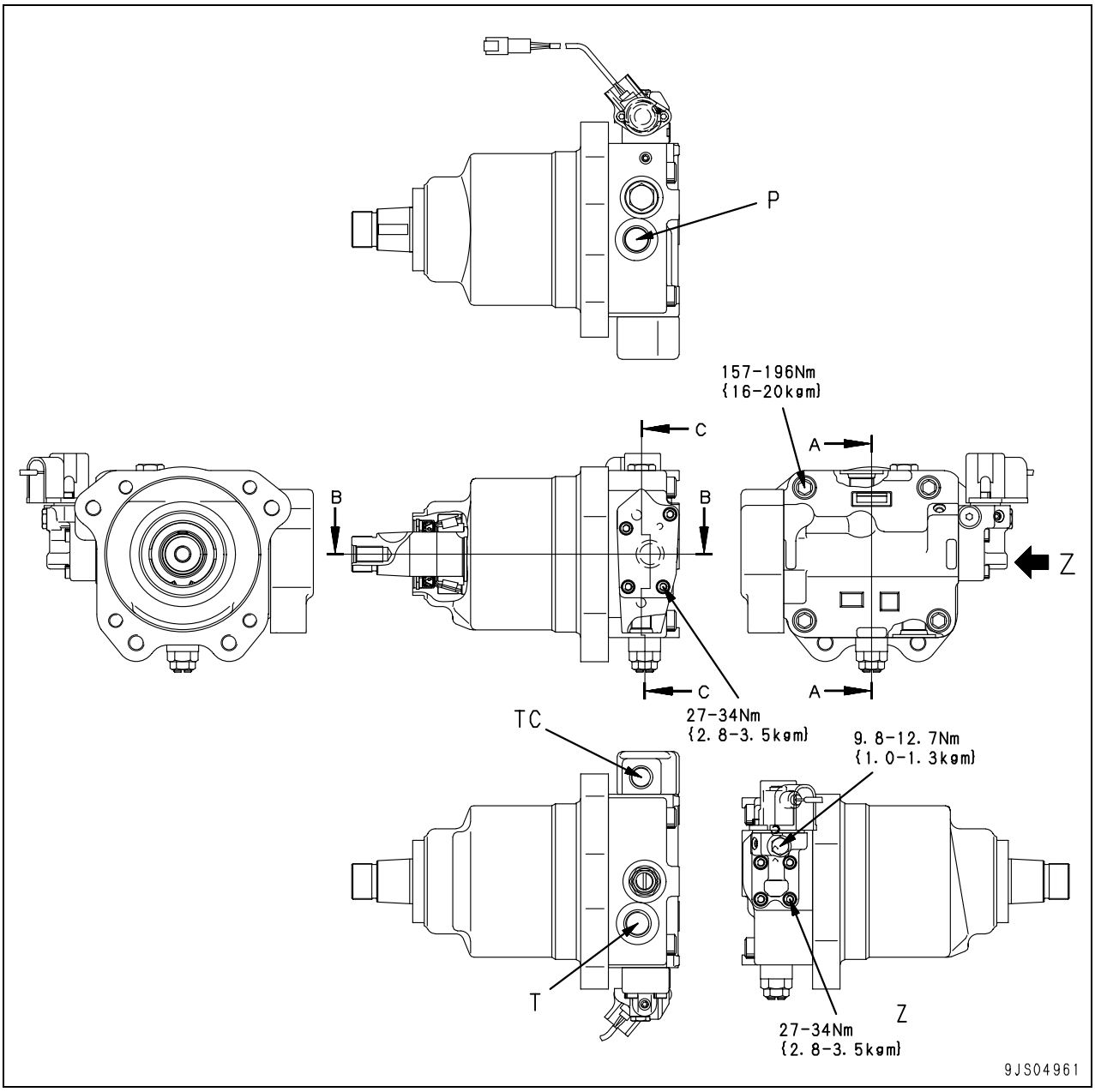

P: From fan pump
T: From cooler to tank
TC: To tank

Specifications

Type: LMF110(65)
Capacity: 65.1 cc/rev
Rated speed: 1,250 rpm
Rated flow: 81.4 ℓ/mm
Check valve crack pressure: 78.5 kPa {0.8 kg/cm^2}

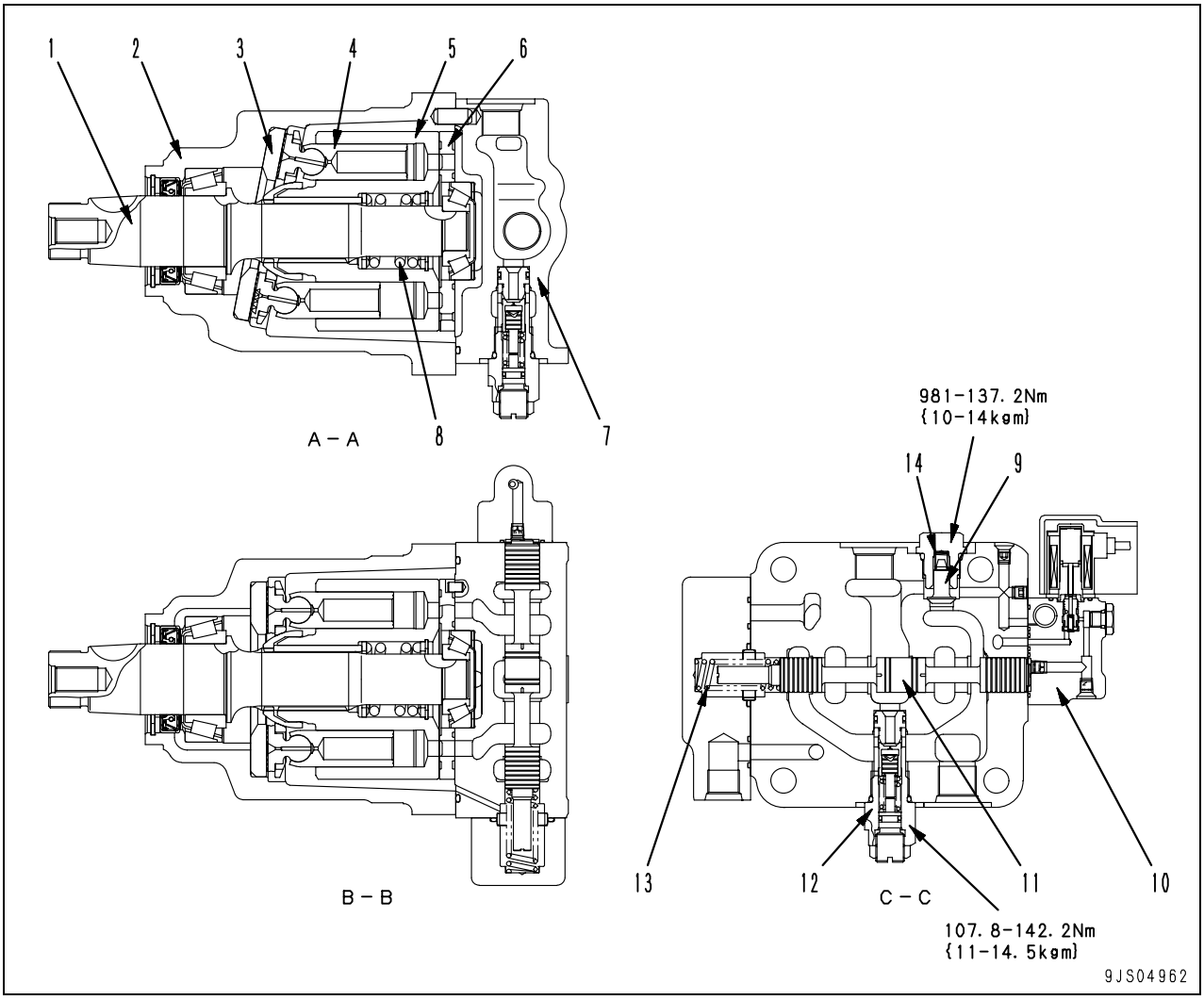

1. Output shaft
2. Case
3. Thrust plate
4. Piston assembly
5. Cylinder block
6. Valve plate
7. End cover
8. Center spring
9. Check valve
10. Pilot valve
11. Spool for reversible valve
12. Safety valve

Unit: mm

No.	Check item	Criteria					Remedy
		Standard size			Repair limit		
13	Spool return spring	Free length x outer diameter	Installation length	Installation load	Free length	Installation load	Replace spring if damaged or deformed.
		62.66 x 19.8	53.5	146 N {14.9 kg}	—	117 N {11.9 kg}	
14	Check valve spring	16.4 x 8.9	11.5	13.7 N {1.4 kg}	—	11.0 N {1.12 kg}	

1. Hydraulic motor

Function

- This hydraulic motor is called a swash plate-type axial piston motor. It converts the energy of the pressurized oil sent from the hydraulic pump into rotary motion.

Principle of operation

- The oil sent from the hydraulic pump flows through valve plate (7) into cylinder block (5). This oil can flow on only one side of the (Y-Y) line connecting the top dead center and bottom dead center of the stroke of piston (4).
- The oil sent to one side of cylinder block (5) presses piston (4) [4 or 5 pieces], and generates force (F1)[F1 = P x $\pi D^2/4$].
- This force is applied to thrust plate (2). Since thrust plate (2) is fixed to the angle of (a°) degrees to the output shaft(1), the force is divided into components (F2) and (F3).
- The radial component (F3) generates torque [T = F3 x ri] against the (Y-Y) line connecting the top dead center and bottom dead center.
- The result of this torque [T = Σ (F3 x ri)] rotates cylinder block (5) through the piston.
- Since this cylinder block (5) is splined to the output shaft, the output shaft revolves to transmit the torque.

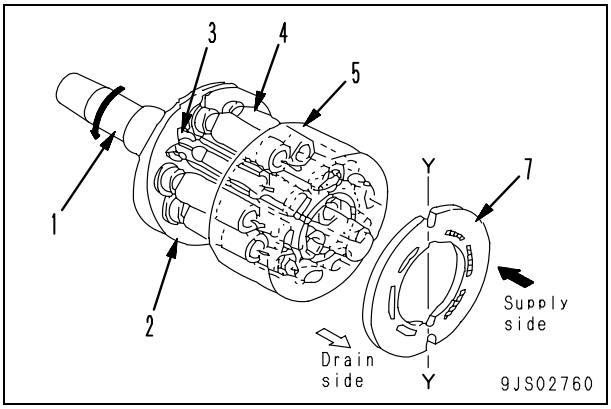

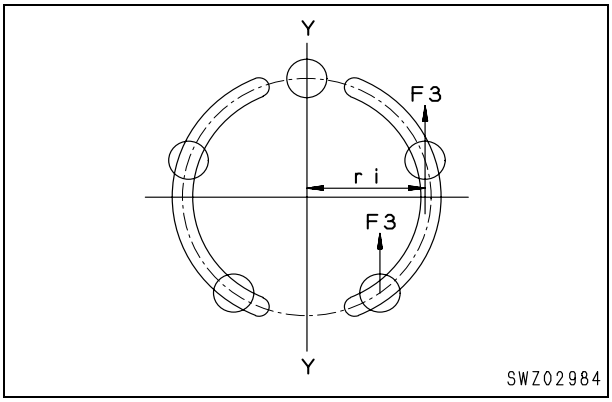

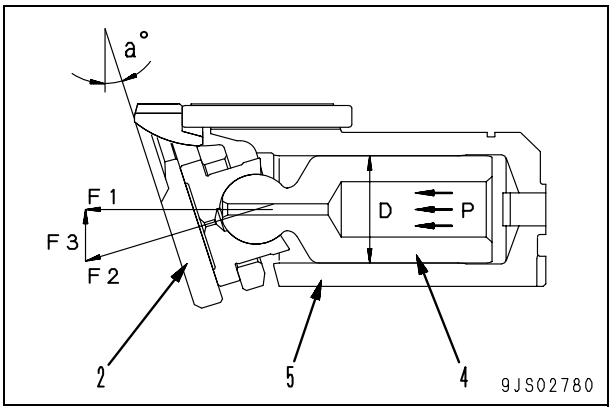

2. Suction valve

Function

- If the fan pump stops, the pressurized oil does not flow into the motor. Since the motor continues revolution because of the force of inertia, however, the pressure on the outlet side of the motor rises.
- When the oil stops flowing in from inlet port (P), suction valve (1) sucks in the oil on the outlet side and supplies it to port (MA) where there is not sufficient oil to prevent cavitation.

Operation

1) When pump is started

- If the pressurized oil from the pump is supplied to port (P) and the pressure on (MA) side rises and starting torque is generated in the motor, the motor starts revolution.The pressurized oil on the motor outlet (MB) side of the motor returns through port (T) to the tank.

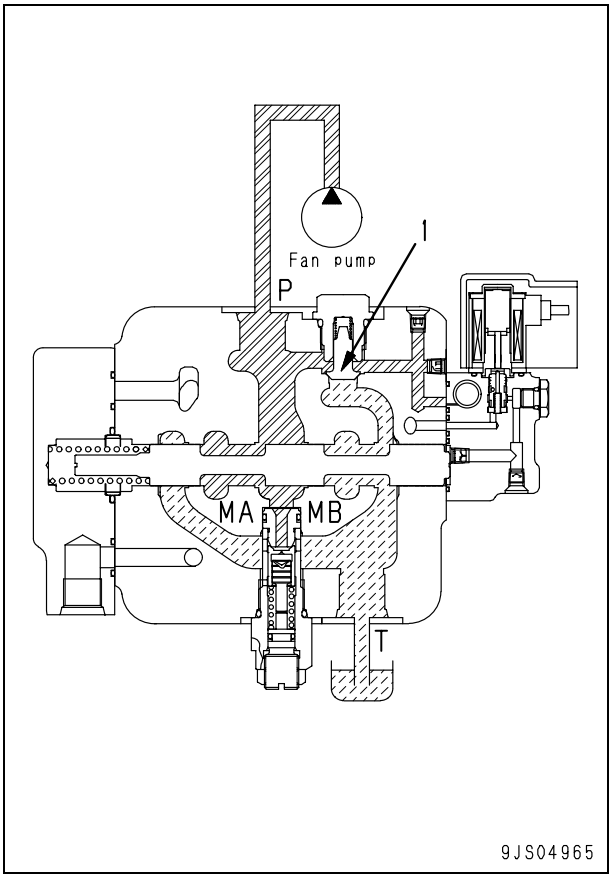

2) When the pump is stopped

- If the engine is stopped and the input revolution of the fan pump lowers to 0 rpm, the pressurized oil from the pump is not supplied to port (P) any more. As the pressurized oil is not supplied to the (MA) side of the motor, the motor speed lowers gradually to stop.
- If the motor shaft is revolved by the force of inertia while the oil flow in the port (P) is reducing, the oil in port (T) on the outlet side is sent by the suction valve (1) to the (MA) side to prevent cavitation.

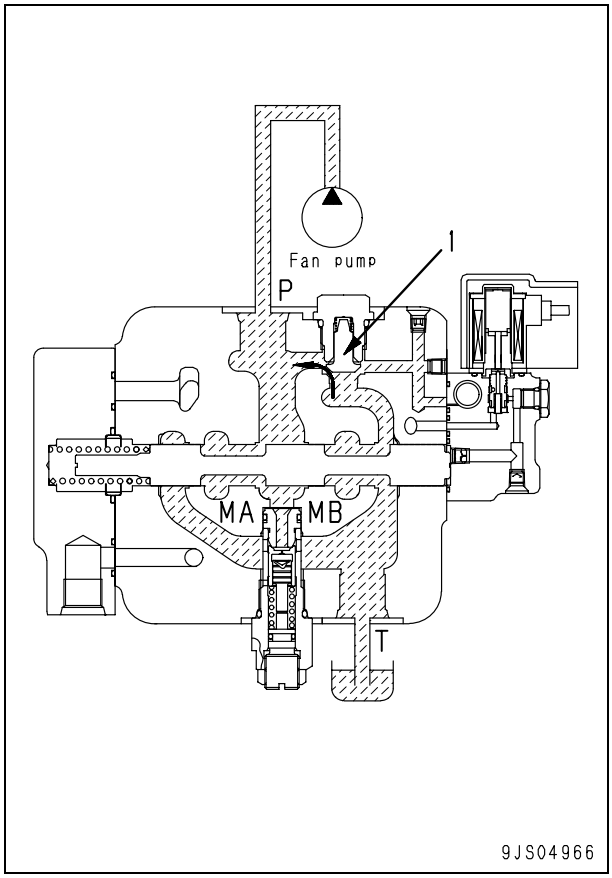

3. Operation of reversible valve

1) When the ON-OFF solenoid is de-energized.

- If ON-OFF solenoid (1) is “de-energized“, the pressurized oil from the pump is blocked by ON-OFF selector valve (2), and port (C) opens for the tank circuit.
- Spool (3) is pushed to the right by spring (4).
- Motor port (MA) opens and pressurized oil flows in to revolve the motor in forward (clockwise).

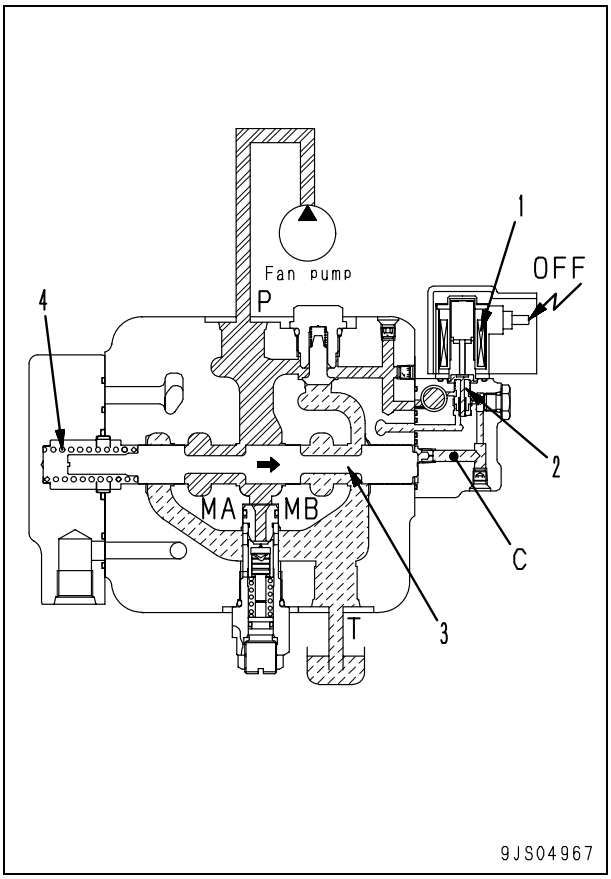

2) When the ON-OFF solenoid is energized.

- If ON-OFF solenoid (1) is “energized“, ON-OFF selector valve (2) changes to let the pressurized oil from the pump flow through port (C) into spool chamber (D).
- The pressurized oil in chamber (D) pushes valve spool (3) to the left against spring (4).
- Motor port (MB) opens and pressurized oil flows in to revolve the motor in reverse (counterclockwise).

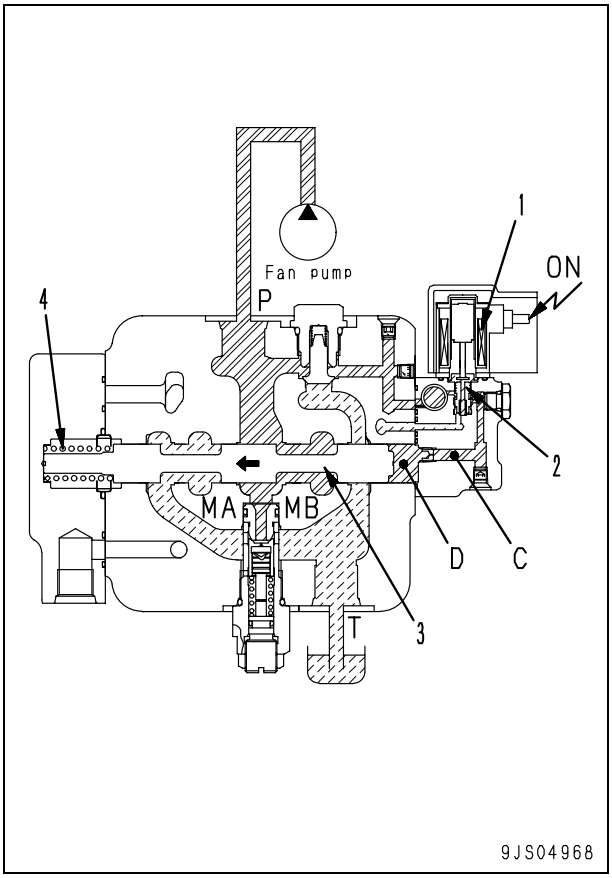

4. Safety valve

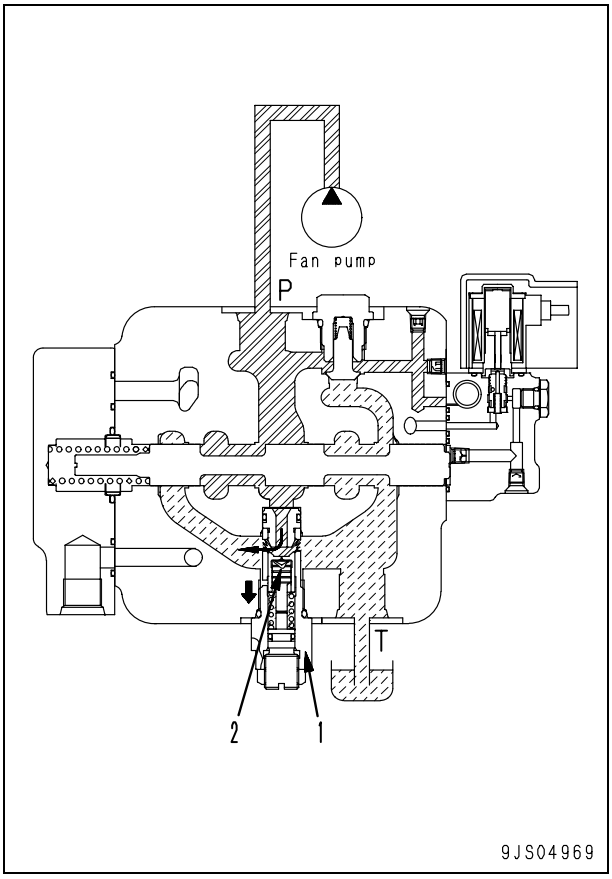

Function

- When the engine is started, the pressure in port (P) of the fan motor is heightened in some cases.
- Safety valve (1) is installed to protect the fan system circuit.

Operation

- If the pressure in port (P) rises above the cracking pressure of safety valve (1), valve (2) of safety valve (1) opens to release the pressurized oil into port (T).
- By this operation, generation of abnormal pressure in port (P) is prevented.

D155AX-6 Bulldozer

Form No. SEN00603-00

© 2005 KOMATSU
All Rights Reserved
Printed in Japan 12-05 (02)

BULLDOZER

D155AX-6

Machine model	Serial number
D155AX-6	80001 and up

10 Structure, function and maintenance standard

Power train system, Part 1

Power train system, Part 1 2
Power train skeleton 2
Overall drawing of power train unit 4
Power train hydraulic piping drawing 6
Damper, universal joint 8
Torque converter, PTO 10
Torque converter control valve 19
Lockup clutch ECMV, stator clutch ECMV 20
Transmission control 26
Transmission 28
Transmission ECMV 40
Main relief valve and torque converter relief valve 46
Lubrication relief valve 48
Scavenging pump 49
Power train and steering lubrication pump 50

Power train system, Part 1

Power train skeleton

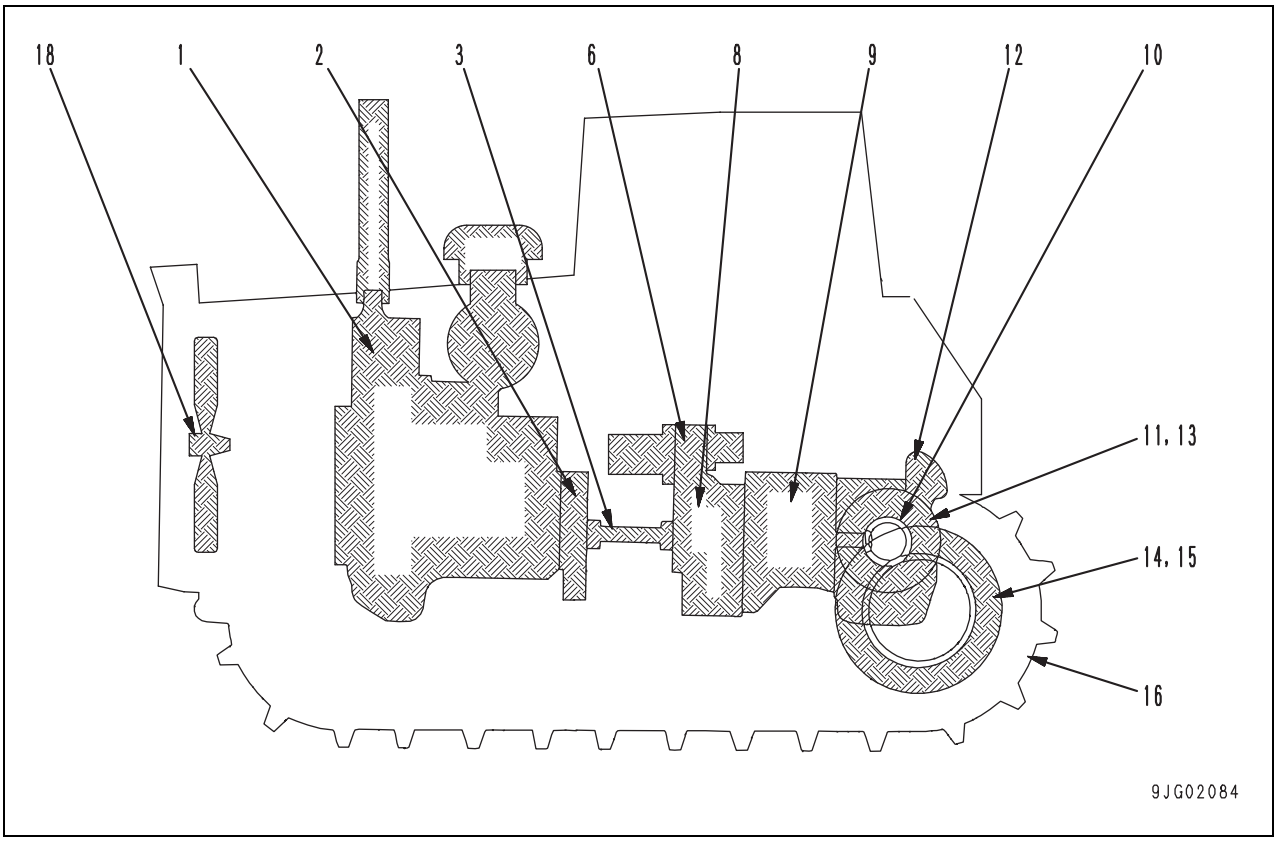

Outline

- The power generated by engine (1) has its torsional vibration dampened by damper (2), and then passes through universal joint (3), and is transmitted to torque converter (8).
- The power from the engine is transmitted through the oil by torque converter (8) to the transmission input shaft (turbine shaft) in accordance with the change in load. (with L/U)
- Transmission (9) uses a combination of a planetary gear system and hydraulic clutches to reduce the speed and shift the gears (3 forward gears and 3 reverse gears). It connects 2 sets of clutches selected according to the change in load, and transmits the power to bevel gear (10) from the bevel pinion at the rear end of the transmission.
- The power transmitted to the bevel gear shaft is transmitted to HSS (Hydrostatic Steering System) (11). Hydraulic, HSS pump (5) is driven by PTO (6), and output oil of the Hydraulic, HSS pump drives HSS motor (12). The rotation of the pair of the HSS gears on the right and left is controlled by HSS motor (12). The steering is carried out by generating a difference in speed on the right and left. It is also possible to use the HSS mechanism to rotate the right and left sides in opposite directions to carry out pivot turns.
- Brake (13) of the HSS is used for braking the machine. Brake (13) is a wet, multiple disc clutch, spring boosted type. The power sent from brake (13) is transmitted to final drive (14).
- Final drive (14) consists of a single-stage spur gear and a single-stage planetary gear system. It reduces the speed and rotates sprocket (15) to drive track shoe (16) and move the machine. It also rotates cooling fan motor (18) with the oil discharged from cooling fan pump (17) driven with PTO (6).

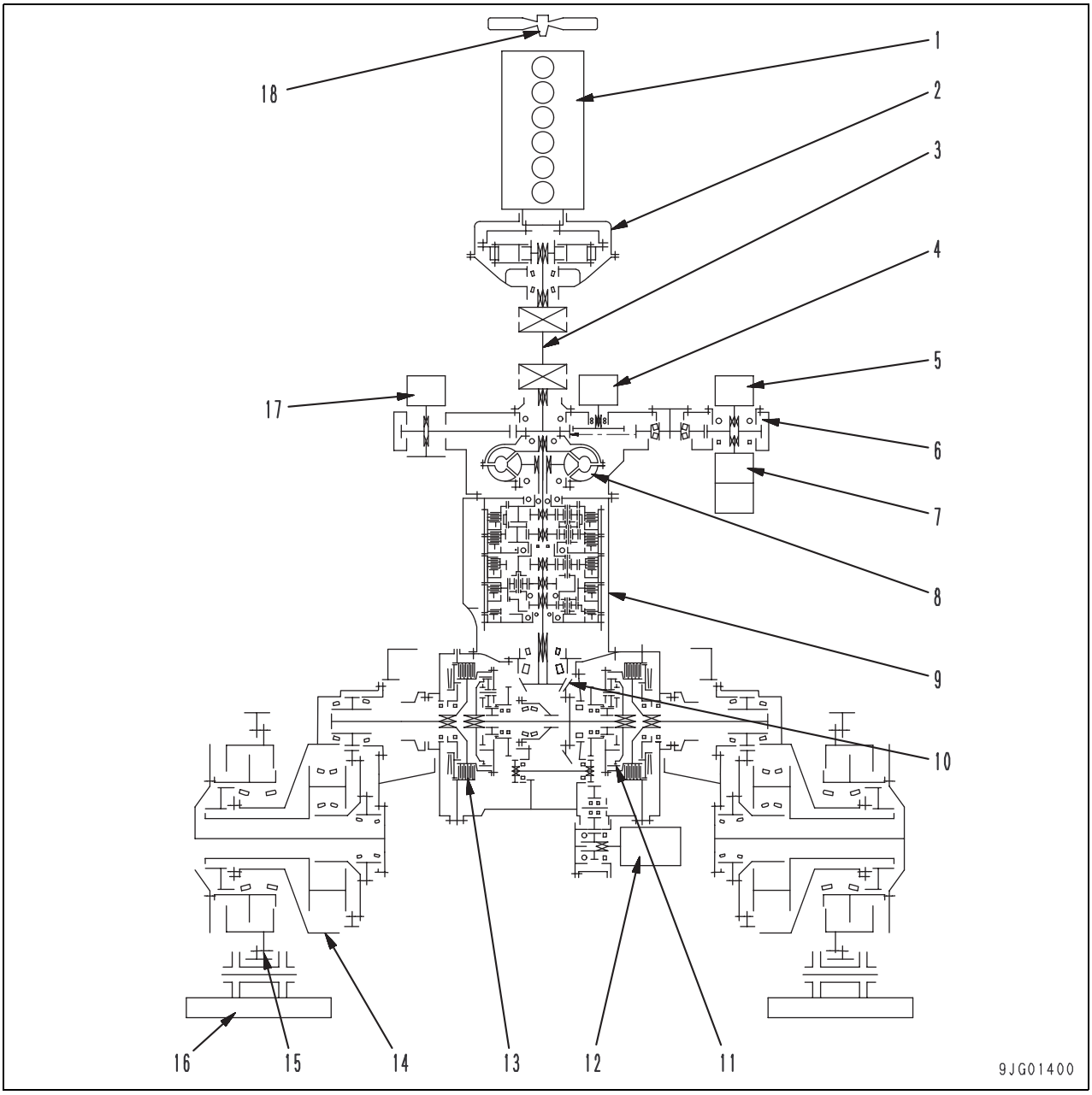

1. Engine (SAA6D140E-5)
2. Damper
3. Universal joint
4. Scavenging pump (SAR(4)140)
5. Hydraulic, HSS pump (HPV190)
6. PTO
7. Power train lubricating pump (SAR(3)100+40)
8. Torque converter
9. Transmission
10. Bevel gear
11. HSS unit
12. HSS motor (KMF140)
13. Brake
14. Final drive
15. Sprocket
16. Track shoe
17. Cooling fan pump (LPV45)
18. Cooling fan motor (LMF65)

Overall drawing of power train unit

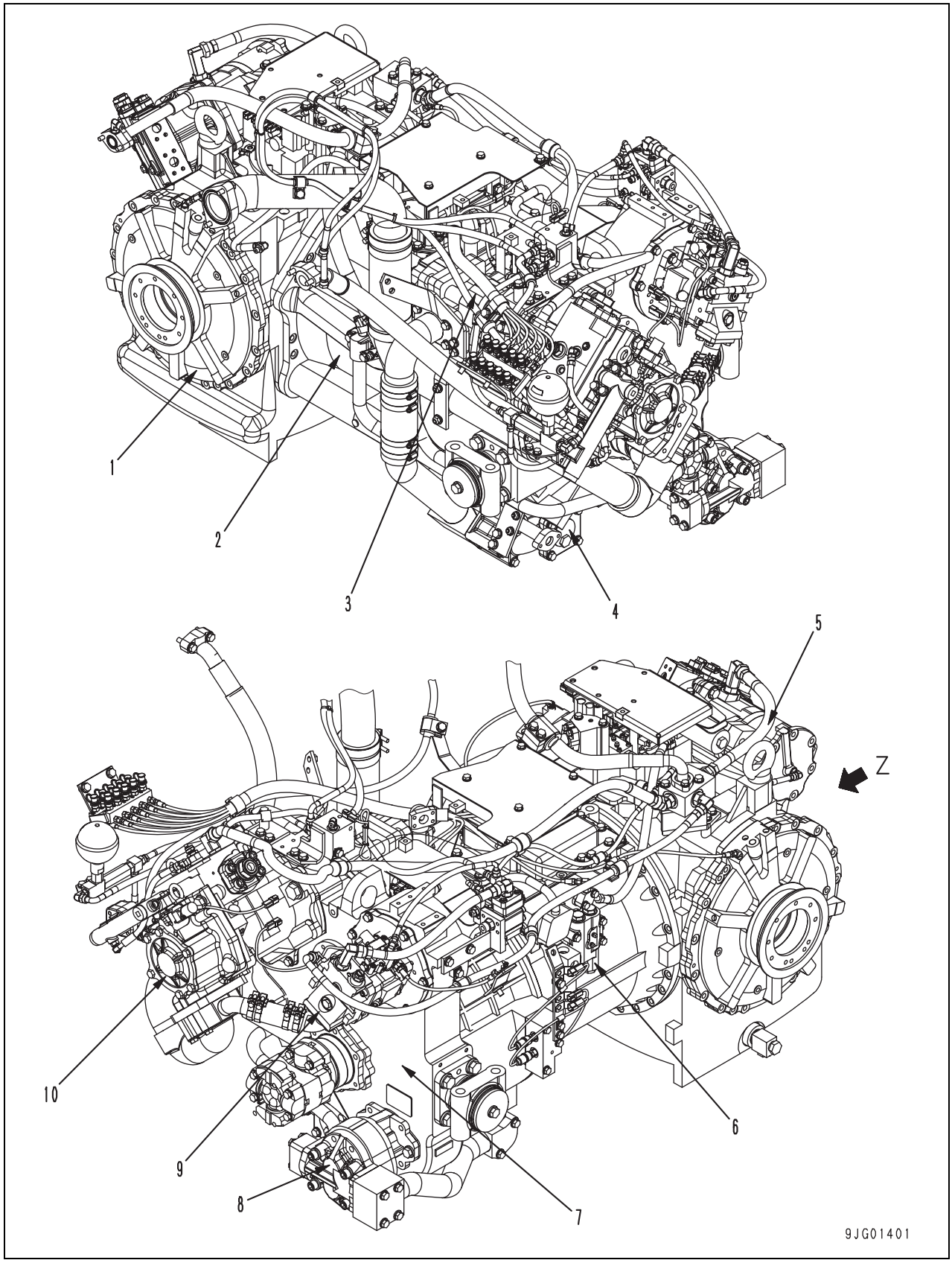

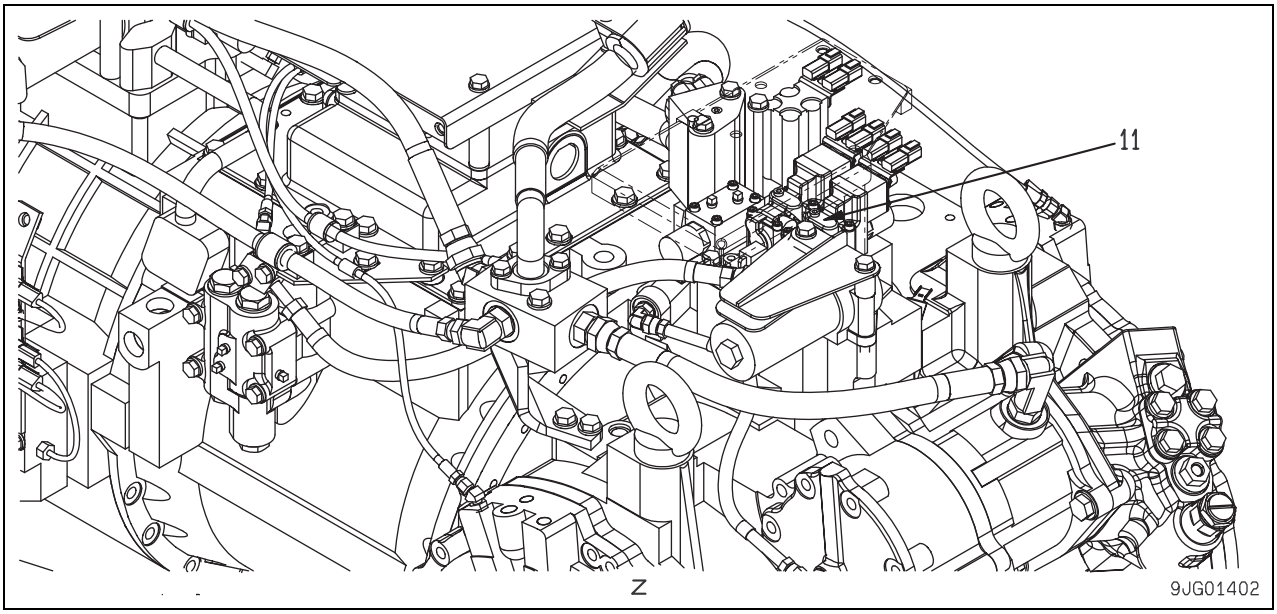

1. HSS unit
2. Transmission
3. Power train, lubricating pump (SAR(3)100+40)
4. Power train oil strainer
5. HSS motor (KMF140)
6. Main relief, torque converter relief valve
7. Torque converter, PTO
8. Scavenging pump (SAR(4)140)
9. Cooling fan pump (LPV45)
10. Hydraulic, HSS pump (HPV190)
11. Brake control valve

Outline

- The power train unit can be broadly divided into torque converter, PTO (7), transmission (2), and HSS unit (1).
- So, after the power train unit has been removed, it can be disassembled into the torque converter, PTO (7), transmission (2), and HSS unit (1).
- HSS unit consists of the bevel pinion unit, bevel gear shaft, HSS motor, planetary gear and brake.

Power train hydraulic piping drawing

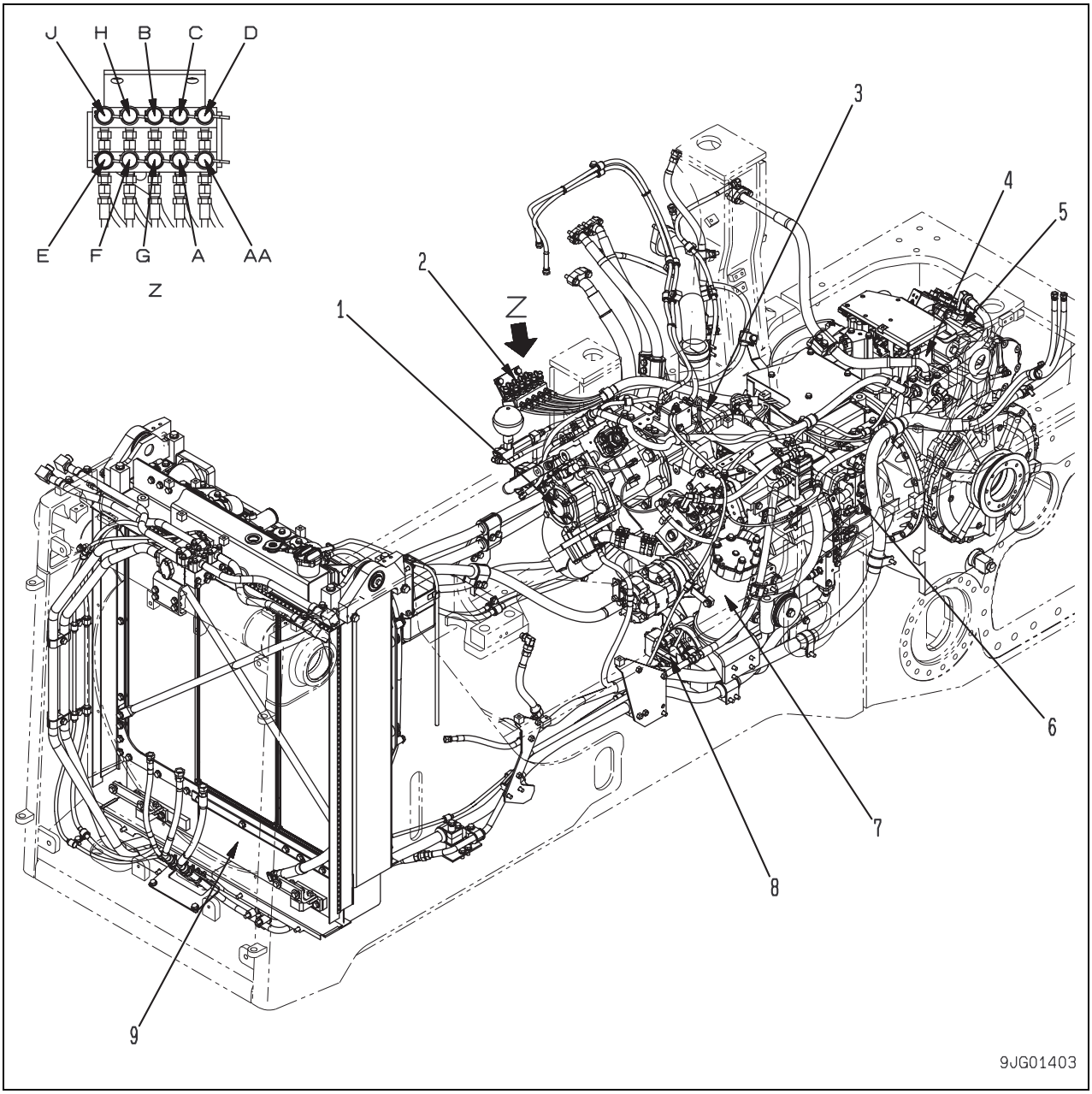

1. Hydraulic, HSS pump (HPV190)
2. Centralized pressure detection port
3. Power train, lubrication pump (SAR(3)-100+40)
4. Brake control valve
5. HSS motor (KMF140)
6. Main relief, torque converter relief valve
7. Power train oil filter
8. Scavenging pump (SAR(4)140)
9. Power train oil cooler (built in radiator lower tank)

A: Left brake oil pressure pickup port (LB)
AA: Right brake oil pressure pickup port (RB)
B: 3rd transmission clutch oil pressure pickup port (3RD)
C: 2nd transmission clutch oil pressure pickup port (2ND)
D: 1st transmission clutch oil pressure pickup port (1ST)
E: Reverse transmission clutch oil pressure pickup port (R)
F: Forward transmission clutch oil pressure pickup port (F)
G: Transmission main relief oil pressure pickup port (TM)
H: Lockup clutch oil pressure pickup port (LC)
J: Stator clutch oil pressure pickup port (SC)

Damper, universal joint

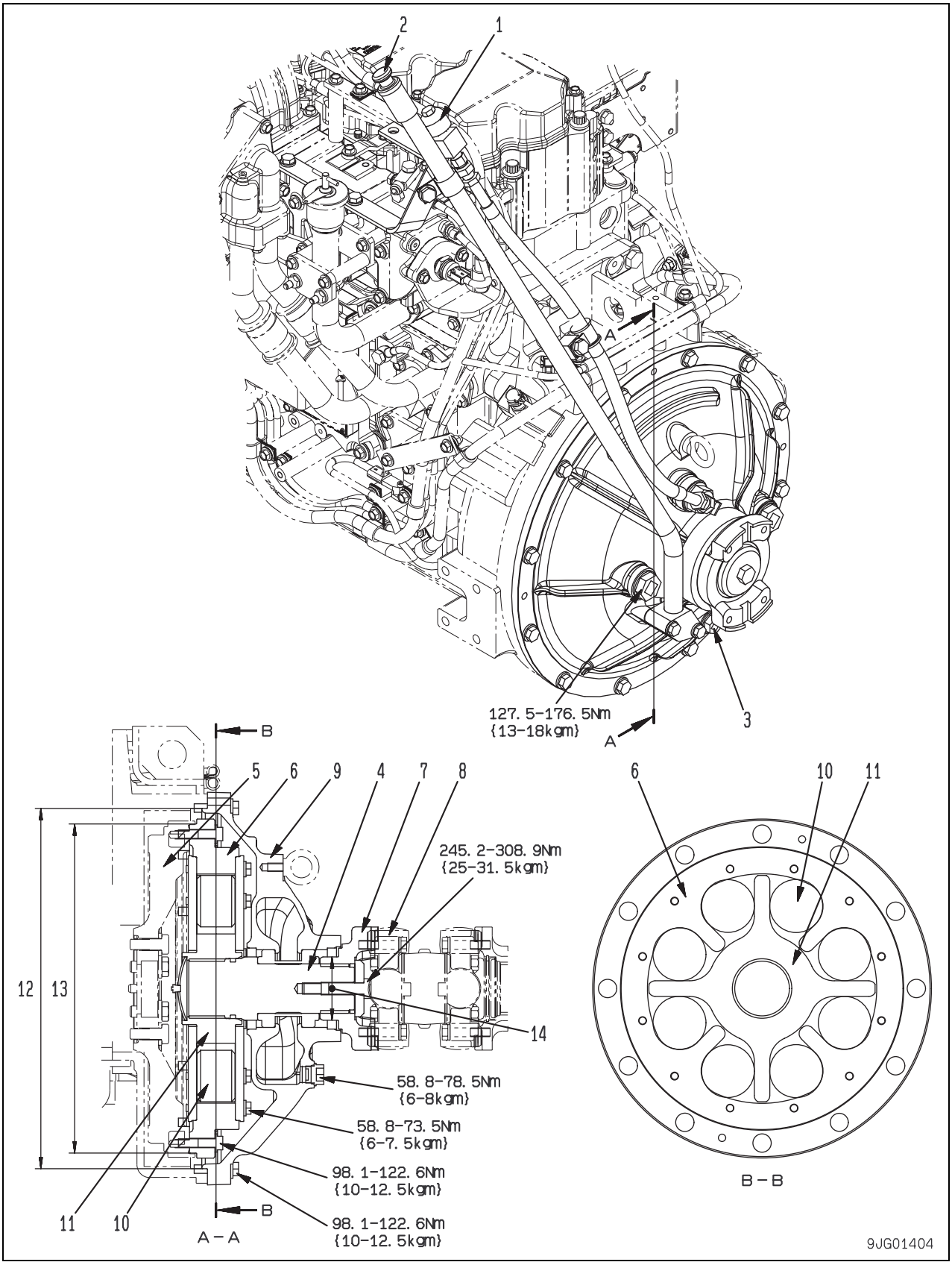

1. Breather
2. Dipstick
3. Drain plug
4. Output shaft
5. Flywheel
6. Outer body
7. Coupling
8. Universal joint
9. Cover
10. Rubber coupling
11. Inner body

Unit: mm

<table>
<tr><th>No.</th><th>Check item</th><th colspan="6">Criteria</th><th>Remedy</th></tr>
<tr><td rowspan="2">12</td><td rowspan="2">Clearance between flywheel housing and cover</td><td rowspan="2">Standard size</td><td colspan="2">Tolerance</td><td rowspan="2">Standard clearance</td><td rowspan="2">Clearance limit</td><td rowspan="4">Replace</td></tr>
<tr><td>Shaft</td><td>Hole</td></tr>
<tr><td>511.18</td><td>–0.022
–0.092</td><td>+0.070
0</td><td>0.022 –
0.162</td><td>0.2</td></tr>
<tr><td>13</td><td>Clearance between flywheel and damper</td><td>466.72</td><td>–0.020
–0.083</td><td>+0.063
0</td><td>0.020 –
0.146</td><td>0.2</td></tr>
<tr><td rowspan="2">14</td><td rowspan="2">Outside diameter of coupling oil seal contact surface</td><td colspan="2">Standard size</td><td colspan="2">Tolerance</td><td colspan="2">Repair limit</td></tr>
<tr><td colspan="2">90</td><td colspan="2">0
–0.087</td><td colspan="2">89.8</td></tr>
</table>

Outline

- The damper, dampens the torsional vibration caused by the change in engine torque and the impact torque generated when accelerating suddenly or when carrying out heavy-duty digging. In this way, it acts to protect the torque converter, transmission, and other parts of the power train.
- The damper has few component parts: it uses a rubber coupling, so the vibration is absorbed by the damping effect of the rubber material.

Operation

- The motive force from the engine passes through flywheel (5) and is transmitted to outer body (6).
  The torsional vibration of the engine is absorbed by rubber coupling (10), and the power is transmitted to inner body (11). It passes through universal joint (8), and is then transmitted to the torque converter and transmission.

Torque converter, PTO

★ PTO: Abbreviation for Power Take Off

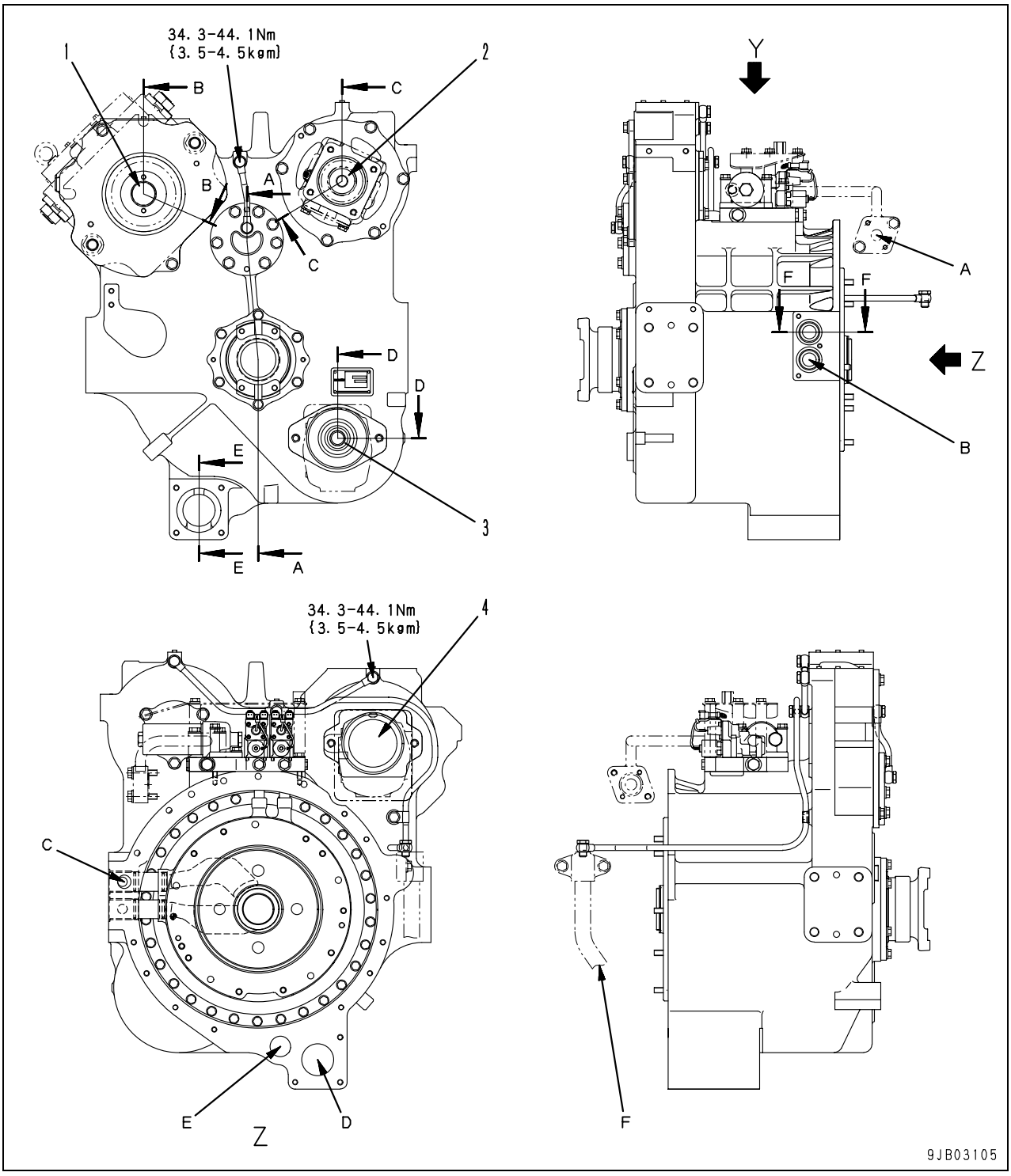

A: From power train pump
B: To power train oil cooler
C: From main relief valve
D: From transmission case
E: To transmission case
F: From power train oil cooler

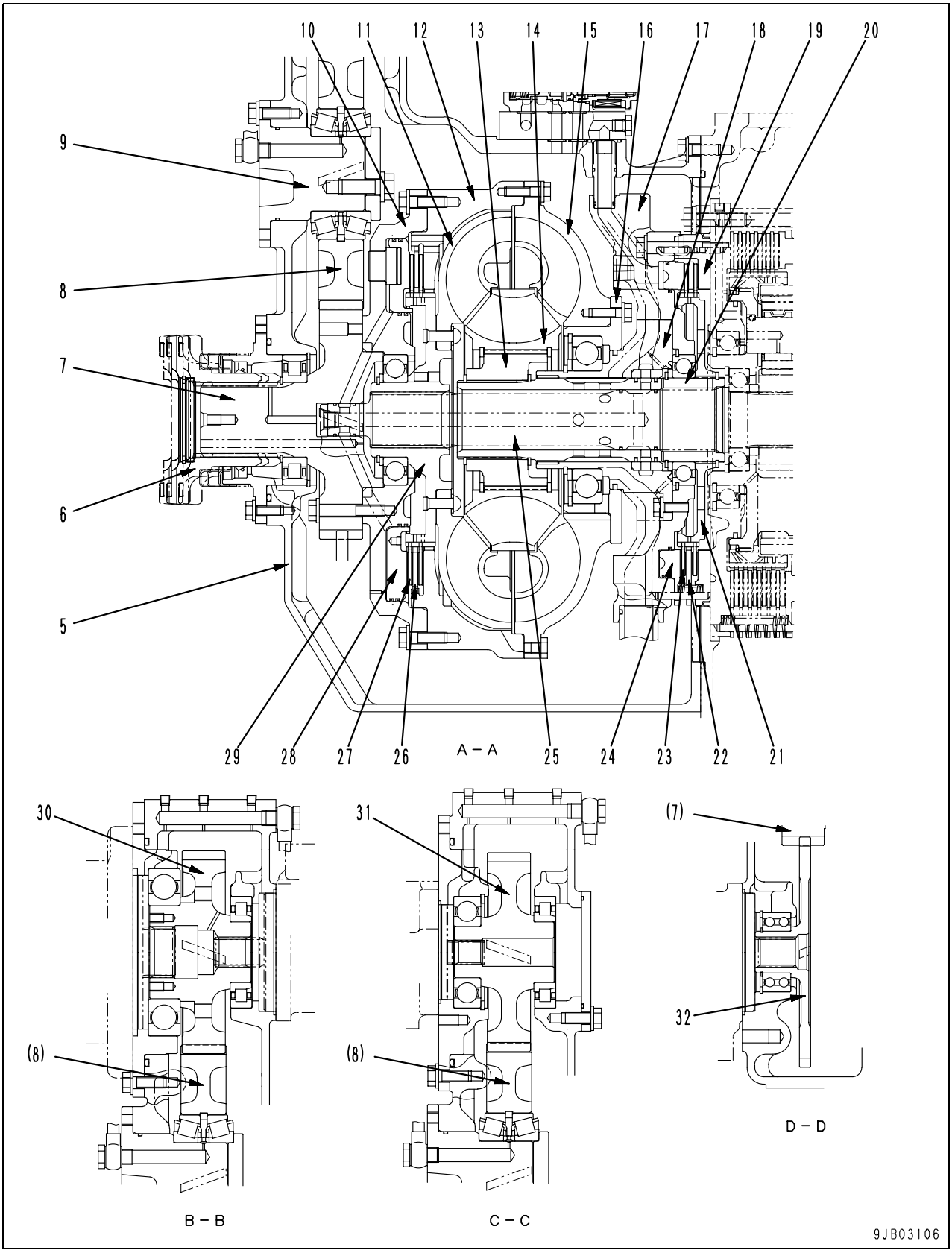
10
11
12
13
14
15
16
17
18
19
20
9
8
7
6
5
29
28
27
26
A – A
25
24
23
22
21
30
31
(7)
32
(8)
(8)
D – D
B – B
C – C
9JB03106

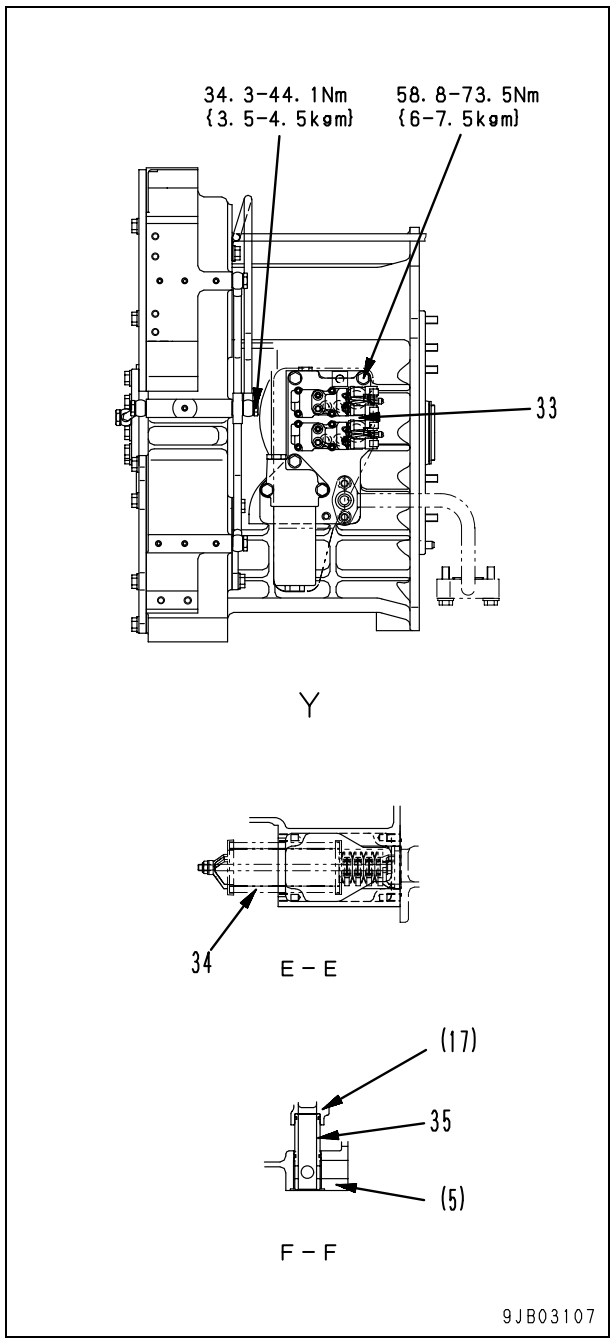

1. Work equipment, HSS pump mounting port
2. Cooling fan pump mounting port
3. Scavenging pump mounting port
4. Power train and steering lubrication pump Mounting port
5. Torque converter case
6. Coupling
7. Input shaft (number of teeth: 58)
8. PTO idler gear (number of teeth: 66)
9. PTO idler gear shaft
10. Lockup clutch housing
11. Turbine
12. Drive case
13. Race
14. Stator
15. Pump
16. Retainer
17. Stator clutch front housing
18. Pump shaft
19. Stator clutch rear housing
20. Stator shaft
21. Stator clutch hub
22. Stator clutch plate
23. Stator clutch disc
24. Stator clutch piston
25. Transmission input shaft
26. Lockup clutch plate
27. Lockup clutch disc
28. Lockup clutch piston
29. Turbine boss
30. PTO Gear A (number of teeth: 49)
31. PTO Gear B (number of teeth: 48)
32. Scavenging pump drive gear (number of teeth: 56)
33. Torque converter control valve
34. Power train oil strainer
35. Sleeve

Outline

- The torque converter is a 3-element, 1-stage, and 1-phase type, which is integral with the transmission.
- The torque converter is equipped with a wet double disc clutch type torque converter lockup device and a stator clutch in order to reduce fuel consumption, to increase the operability, and to reduce the horsepower consumption by the engine.
- For higher efficiency of continuous light dozing and leveling operation, the torque converter is locked up and the engine power is transferred directly to the transmissions input shaft.
- When the torque converter is locked up (the pump and turbine is integrated into 1 unit), the oil is still supplied to the torque converter.

  Accordingly, the oil flowing from the pump through the turbine to the stator is obstructed by the stator blades and cannot flow in any direction. As a result, this oil resists the rotation of the pump and turbine (it is agitated).
- To reduce the rotating resistance of the pump and turbine, the stator clutch is disengaged simultaneously with lockup of the torque converter so that the stator can rotate freely.

  As the stator is dragged and turned by the pump and turbine, the oil returns from the turbine to the pump smoothly against less resistance.

Conditions for lockup range and torque converter range

Torque converter output shaft speed

	Lockup range	Torque converter range
Forward 1st	Min. 1,313 rpm	Max. 1,262 rpm
Forward 2nd	Min. 1,899 rpm	Max. 1,876 rpm
Forward 3rd	Min. 1,366 rpm	Max. 1,355rpm
Reverse 1st	Min. 1,244 rpm	Max. 1,216 rpm
Reverse 2nd	Min. 1,196 rpm	Max. 1,177 rpm
Reverse 3rd	Min. 1,622 rpm	Max. 1,613 rpm

Structure

- Pump (15) is integrated with coupling (6), input shaft (7), lockup clutch housing (10), and drive case (12), and rotated by the engine power.
- Turbine (11) is integrated with turbine boss (29) and transmission input shaft (25), and rotated by the oil from pump (15).
- Stator (14) is integrated with stator shaft (20) and stator clutch hub (21), and fixed to torque converter case (5) through the stator clutch unit.
- The lockup clutch unit consists of clutch plate (26) meshed with drive case (12), clutch disc (27) meshed with turbine boss (29), and clutch piston (28) which slides inside clutch housing (10) integrated with drive case (12).
- The stator clutch unit consists of clutch hub (21) attached to stator shaft (20) with spline, clutch disc (23) meshed with clutch hub (21), clutch plate (22) supported by the pins on clutch front housing (17) and clutch rear housing (19), and clutch piston (24) which slides inside clutch front housing (17).

  Clutch front housing (17) is fixed to sleeve (35) with torque converter case (5).
- The PTO unit consists of input shaft (7), PTO idler gear (8), PTO gear A(30), PTO gear B(31) and scavenging pump drive gear (32).

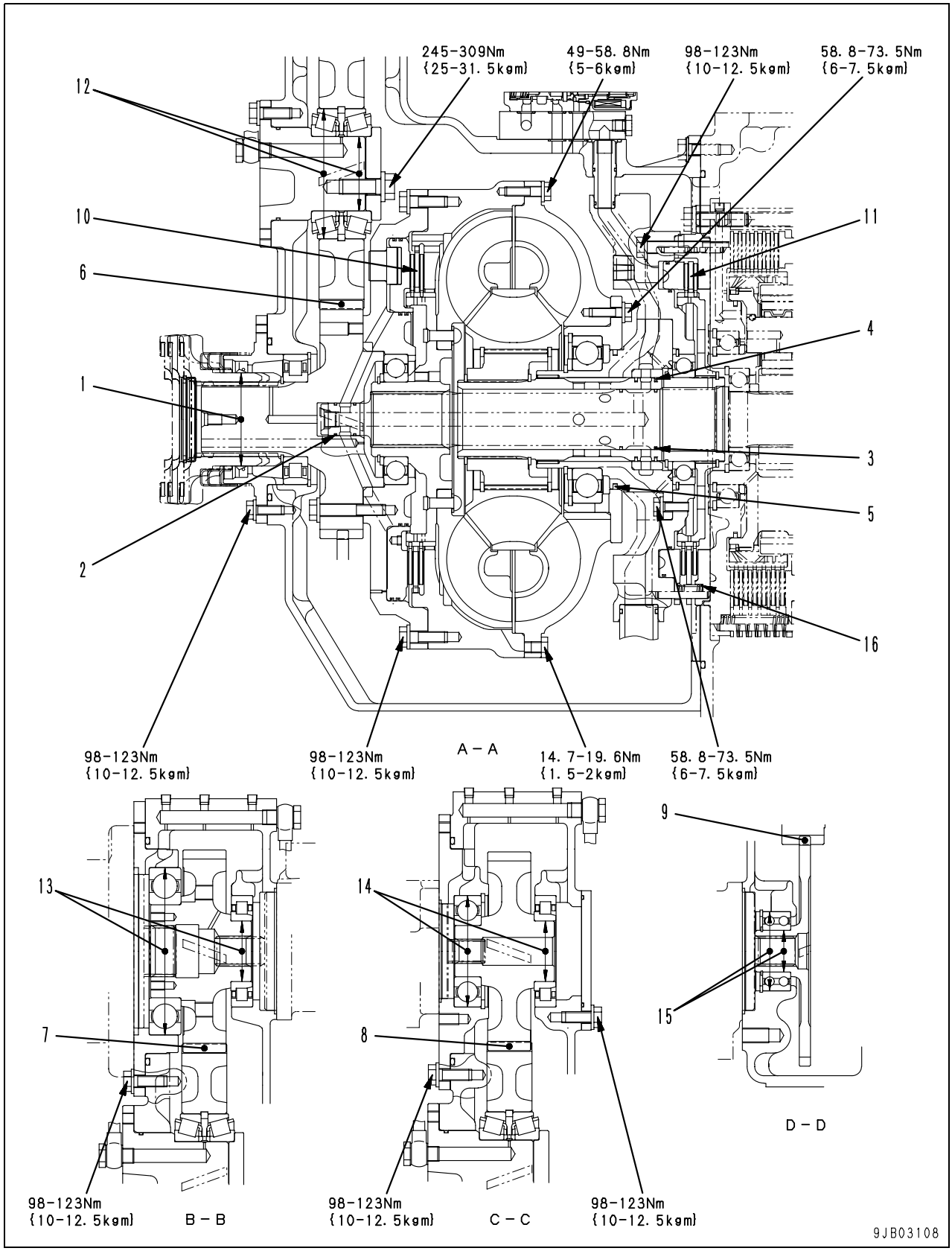
245-309Nm {25-31.5kgm}
49-58.8Nm {5-6kgm}
98-123Nm {10-12.5kgm}
58.8-73.5Nm {6-7.5kgm}
12
10
6
1
2
11
4
3
5
16
98-123Nm {10-12.5kgm}
98-123Nm {10-12.5kgm}
A - A
14.7-19.6Nm {1.5-2kgm}
58.8-73.5Nm {6-7.5kgm}
13
7
98-123Nm {10-12.5kgm}
B - B
14
8
98-123Nm {10-12.5kgm}
C - C
9
15
D - D
98-123Nm {10-12.5kgm}
9JB03108

Unit: mm

No.	Check item		Criteria			Remedy
			Standard size	Tolerance	Repair limit	
1	Outer diameter of oil seal contact surface of the coupling		100	0 -0.054	99.8	Repair by hard chrome plating or replace
2	Inner diameter of the seal ring contact surface of the input shaft		35	+0.025 0	35.1	
	Wear of the transmission input shaft seal ring	Width	2.56	-0.01 -0.03	2.3	Replace
		Thickness	1.7	±0.1	1.55	
3	Inner diameter of the seal ring contact surface of the stator shaft		65	+0.030 0	65.1	Repair by hard chrome plating or replace
	Wear of the transmission input shaft seal ring	Width	3	-0.01 -0.03	2.7	Replace
		Thickness	2.7	±0.1	2.55	
4	Inner diameter of the seal ring contact surface of the sleeve		90	+0.035 0	90.1	Repair by hard chrome plating or replace
	Wear of the stator shaft seal ring	Width	3	-0.01 -0.03	2.7	Replace
		Thickness	3.7	±0.12	3.55	
5	Inner diameter of the seal ring contact surface of the retainer		150	+0.040 0	150.5	Repair by hard chrome plating or replace
6	Backlash between the input shaft and the PTO idler gear		0.198 – 0.484			Replace
7	Backlash between the PTO idler gear and PTO gear A		0.198 – 0.484			
8	Backlash between the PTO idler gear and PTO gear B		0.198 – 0.484			
9	Backlash between the input shaft and the scavenging pump drive gear		0.198 – 0.484			
10	Thickness of the lockup clutch disc		5.0	±0.1	4.5	
	Thickness of the lockup clutch plate		5.0	±0.1	4.5	
	Overall thickness of the lockup clutch assembly		15.0	±0.17	13.9	
11	Thickness of the stator clutch disc		5.0	±0.1	4.5	
	Thickness of the stator clutch plate		5.0	±0.1	4.5	
	Overall thickness of the stator clutch assembly		15.0	±0.17	13.9	

Unit: mm

No.	Check item		Criteria					Remedy
			Standard size	Tolerance		Standard clearance	Clearance limit	
				Shaft	Hole			
12	Fitting tolerance of the PTO idler gear and bearing	Outer diameter	140	0 -0.018	-0.008 -0.033	-0.033 – 0.010	—	Replace
		Inner diameter	80	0 -0.019	0 -0.015	-0.015 – 0.019	—	
13	Fitting tolerance of HSS, work equipment, power train, steering lubrication pump drive gear bearing	Outside diameter (cover side)	180	0 -0.025	+0.026 -0.014	-0.014 – 0.051	—	
		Outside diameter (case side)	120	0 -0.015	+0.022 -0.013	-0.013 – 0.037	—	
		Inner diameter (cover side)	100	+0.035 +0.013	0 -0.020	-0.055 – -0.013	—	
		Inner diameter (case side)	65	+0.030 +0.011	0 -0.015	-0.045 – -0.011	—	
14	Fitting tolerance of fan pump drive gear bearing	Outside diameter (cover side)	120	0 -0.015	+0.022 -0.013	-0.013 – 0.037	—	
		Outside diameter (case side)	120	0 -0.015	+0.022 -0.013	-0.013 – 0.037	—	
		Inner diameter (cover side)	55	+0.030 +0.011	0 -0.015	-0.045 – -0.011	—	
		Inner diameter (case side)	65	+0.030 +0.011	0 -0.015	-0.045 – -0.011	—	
15	Fitting tolerance of the scavenging pump drive gear bearing	Outer diameter	85	0 -0.015	+0.010 -0.025	-0.025 – 0.025	—	
		Inner diameter	45	+0.018 +0.002	0 -0.012	-0.030 – -0.002	—	
16	Stator clutch return spring		Standard size			Repair limit		
			Free length	Installation length	Installation load	Free length	Installation load	
			35	27	85.3 N {8.7 kg}	32.9	72.6 N {7.4 kg}	

Power transmitting route

When lockup clutch is“disengaged“and stator clutch is “engaged“

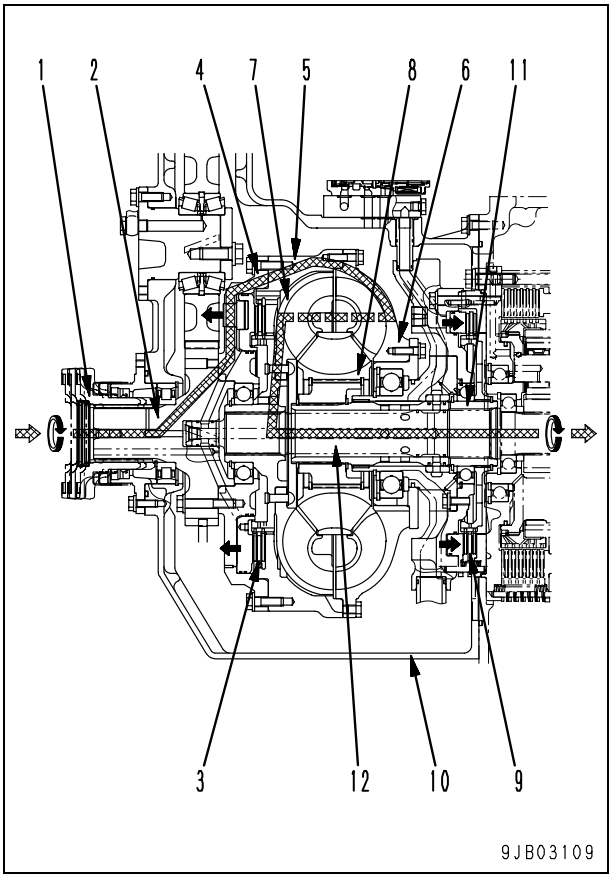

- If lockup clutch (3) is “disengaged“, drive case (5) and turbine (7) are disconnected from each other.
  If stator clutch (9) is “engaged“ at this time, torque converter case (10) and stator shaft (11) are connected to each other to fix stator (8).
  Therefore, the torque converter works as an ordinary torque converter.
- The power from the engine is transmitted to coupling (1) through the damper and the universal joint.
- The power transferred to coupling (1) rotates input shaft (2), clutch housing (4), drive case (5) and pump (6) integrally.
- The power transferred to pump (6) rotates turbine (7) through the medium of oil and is transferred to transmission input shaft (12) attached to turbine (7) with spline.

When lockup clutch is“engaged“and stator clutch is “disengaged“

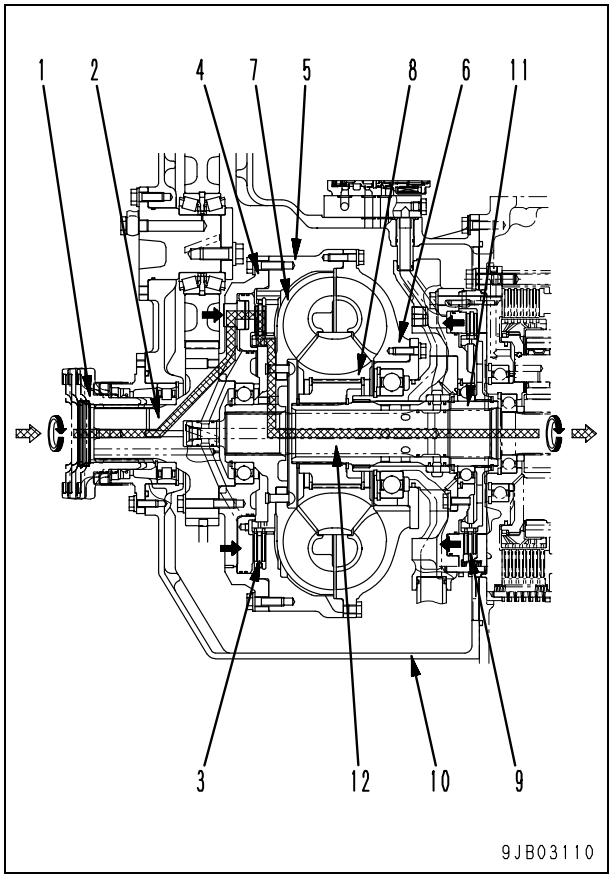

- If lockup clutch (3) is “engaged“, drive case (5) and turbine (7) are connected to each other.
  If stator clutch (9) is “disengaged“ at this time, torque converter case (10) and stator shaft (11) are disconnected from each other, and stator (8) is dragged and turned by pump (6) and turbine (7).
  Therefore, the torque converter works as a lockup torque converter.
- The power from the engine is transmitted to coupling (1) through the damper and the universal joint.
- The power transferred to coupling (1) rotates input shaft (2), clutch housing (4), drive case (5) and pump (6) integrally.
- The power transferred to drive case (5) rotates turbine (7) directly since lockup clutch (3) is fixed, and is transferred to transmission input shaft (12) attached to turbine (7) with spline.

Oil flow

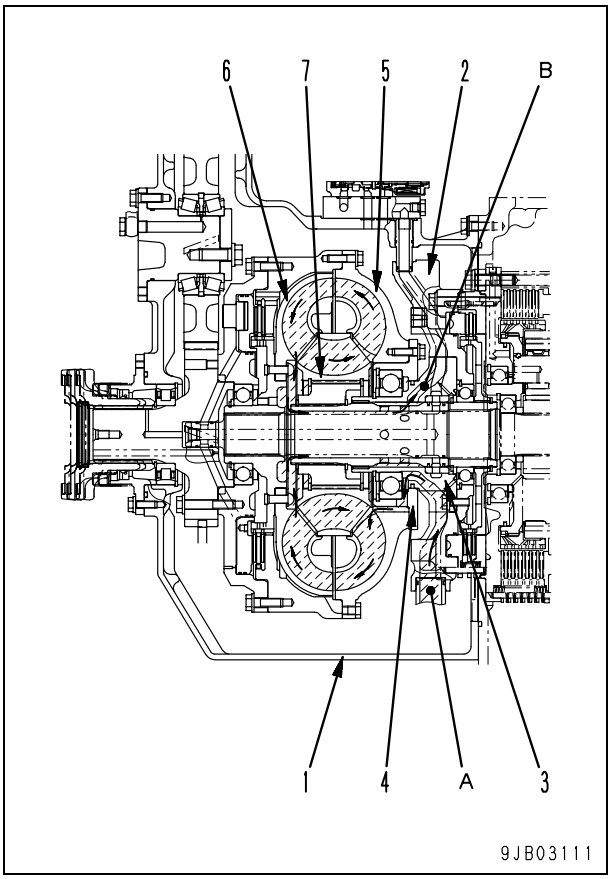

- The oil flows through the main relief valve and its pressure is reduced to below the set pressure by the torque converter relief valve. It then flows in inlet port (A), goes through the oil passages of torque converter case (1), stator clutch front housing (2), pump shaft (3) and retainer (4), and flows into pump (5).
- The oil is given centrifugal force by pump (5) and flows in turbine (6) to transfer its energy to turbine (6).
- The oil from turbine (6) is sent to stator (7) and flows into pump (5) again.A part of the oil, however, is sent through outlet port (B) to the power train oil cooler.

Torque converter control valve

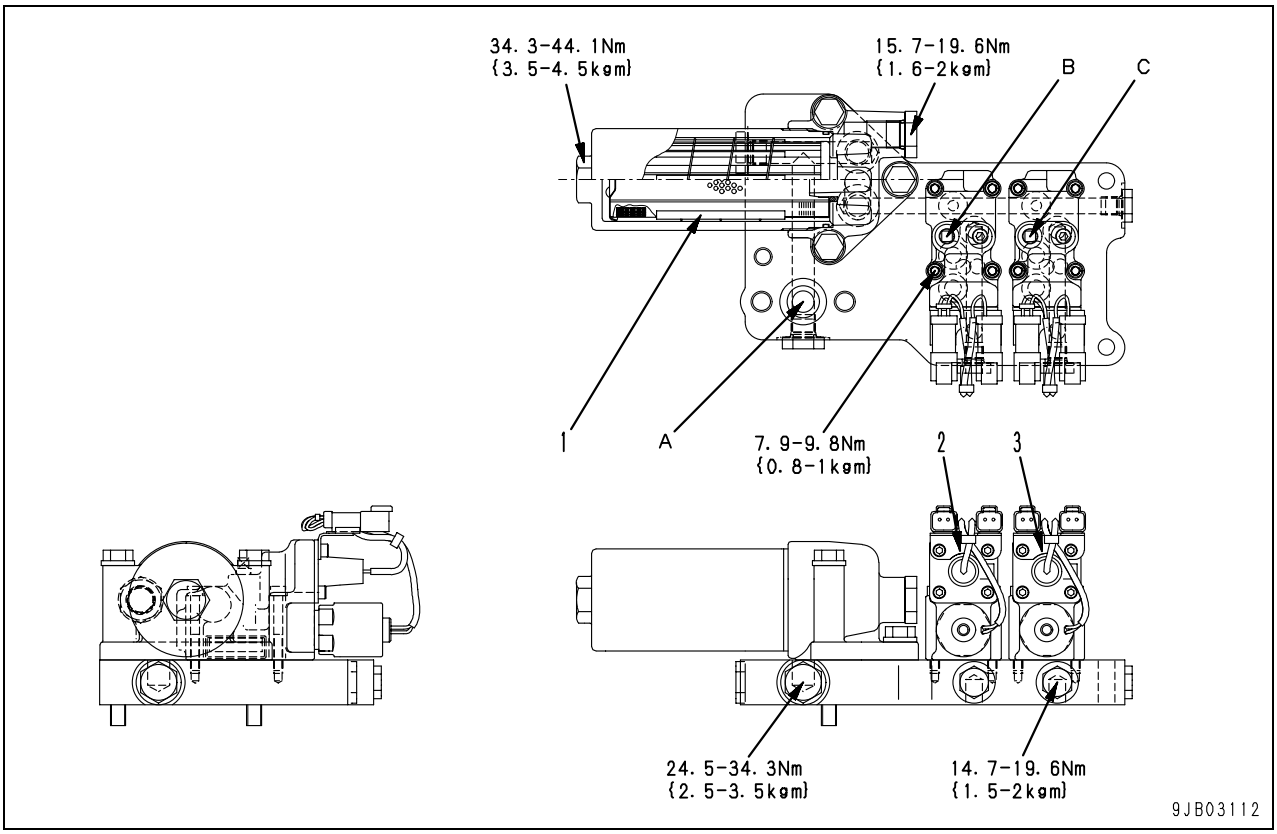

A: From power train pump
B: Stator clutch oil pressure pickup port (SC)
C: Lockup clutch oil pressure pickup port (LC)

1. Torque converter oil filter
2. Stator clutch ECMV
3. Lockup clutch ECMV

Lockup clutch ECMV, stator clutch ECMV

★ ECMV: Abbreviation for Electronic Control Modulation Valve
★ Don't try to disassemble it since adjustment for maintaining the performance will be needed.

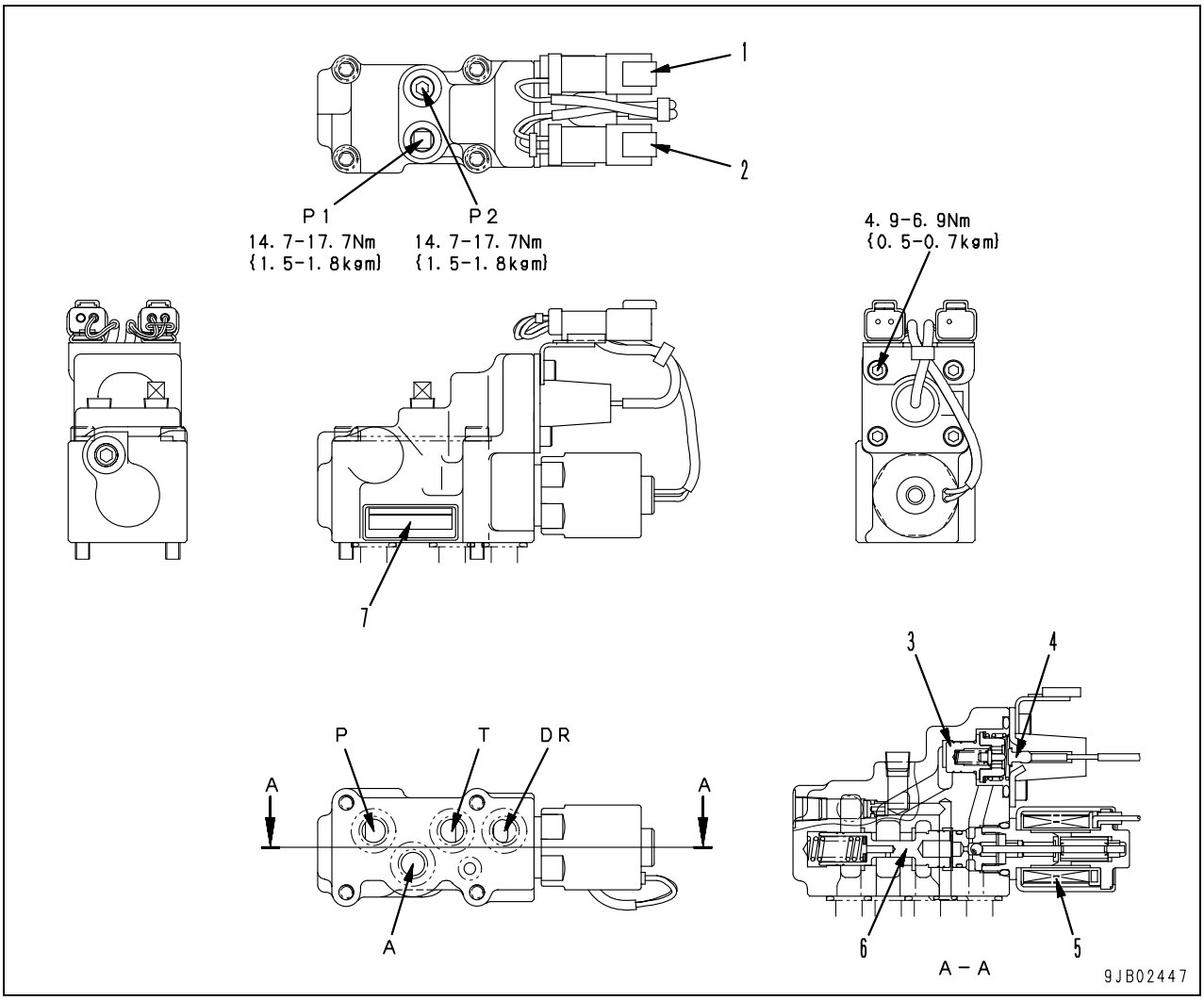

A: To clutch
P: From pump
T: Drain
DR: Drain
P1: Clutch oil pressure pickup port
P2: Pilot oil pressure pickup port

1. Fill switch connector
2. Proportional solenoid connector
3. Pressure detection valve
4. Fill switch
5. Proportional solenoid
6. Pressure control valve
7. Nameplate (*1)

*1:

Operated clutches	Stamp of the nameplates
Lockup	E*******
Stator	A*******

ECMV for lockup clutch

Outline

- This valve is used to switch the clutch in order to regulate the clutch oil pressure to the set pressure.
  Since the modulation waveform is used for the pressure application characteristics to the clutch, ECMV is capable of connecting the lockup clutch smoothly, thereby reducing shocks resulting from gear shift. Above also prevents generation of peak torque in the power train. These arrangements make the machine comfortable to operator and enhance durability of the power train.

When changing from torque converter travel to direct travel

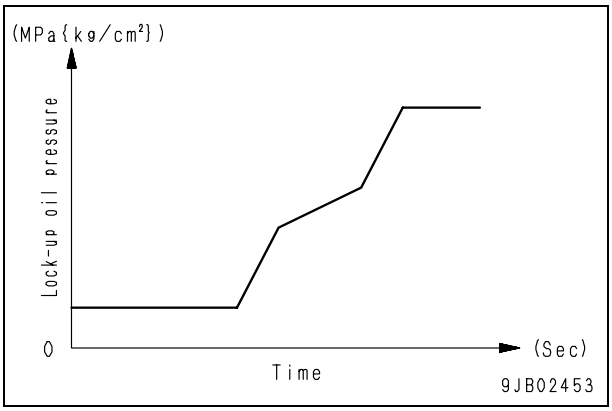

At gear shift (in direct travel)

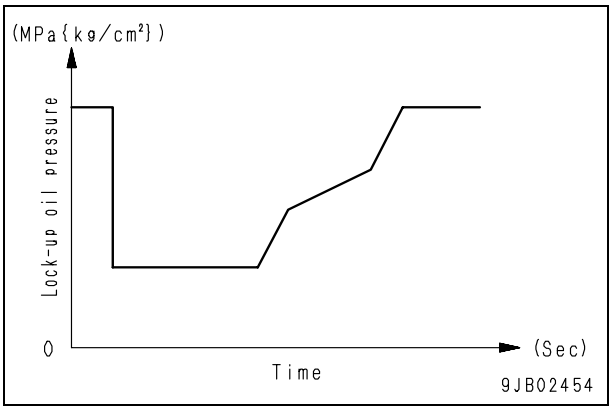

Operation

When traveling in torque converter range

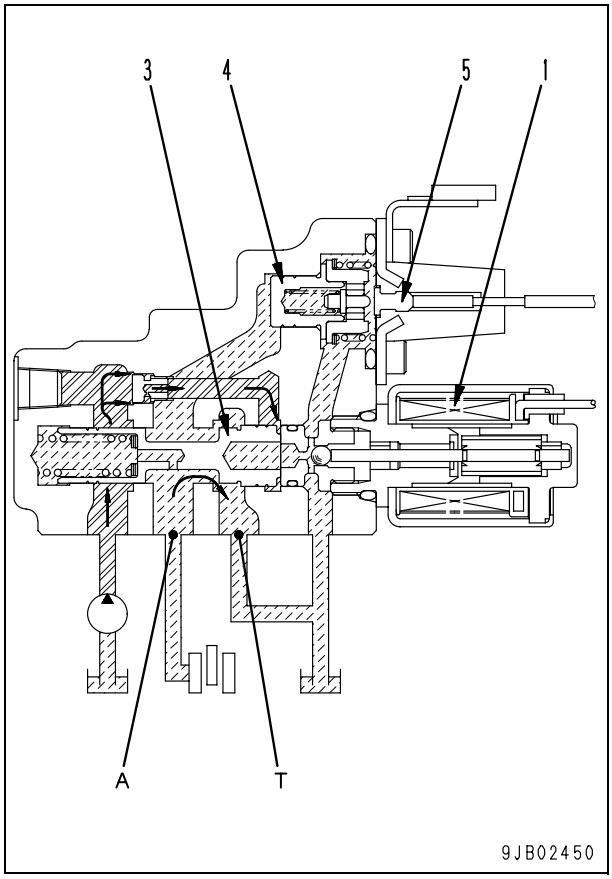

- When traveling in torque converter range, current is not supplied to proportional solenoid (1). Pressure control valve (3) drains the oil from clutch port (A) through drain port (T), and lockup clutch is “released“.
  Also at this time, fill switch (5) is turned “off“ because oil pressure is not applied to pressure detection valve (4).

When traveling in direct range

(Torque converter travel → direct travel)

During filling

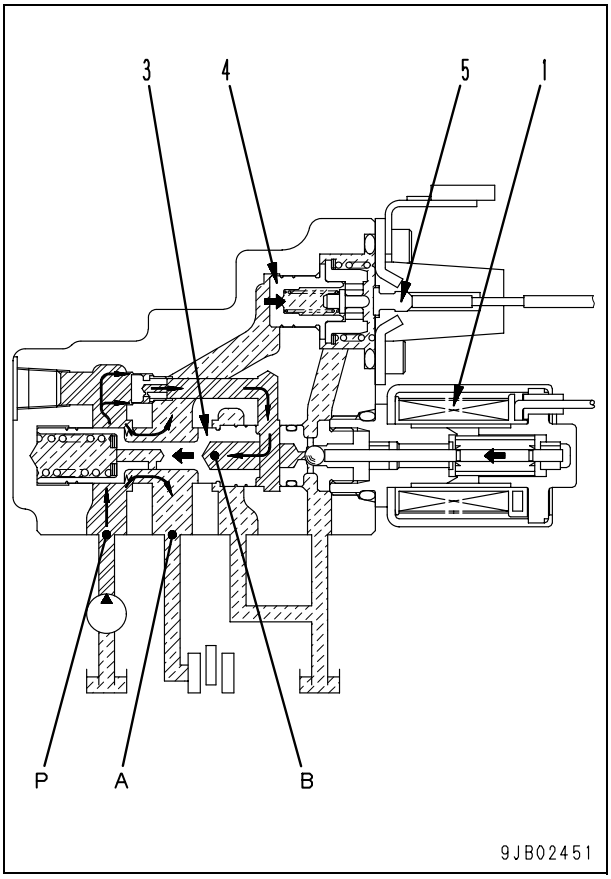

- When traveling in direct (lockup) range, current is supplied to proportional solenoid (1), the oil pressure force balanced with the solenoid force is applied to chamber (B) and pushes pressure control valve (3) to the left.As a result, pump port (P) and clutch port (A) are opened and oil starts filling the clutch. If the clutch is filled with oil, fill switch (5) is turned “on“.

Pressure adjustment

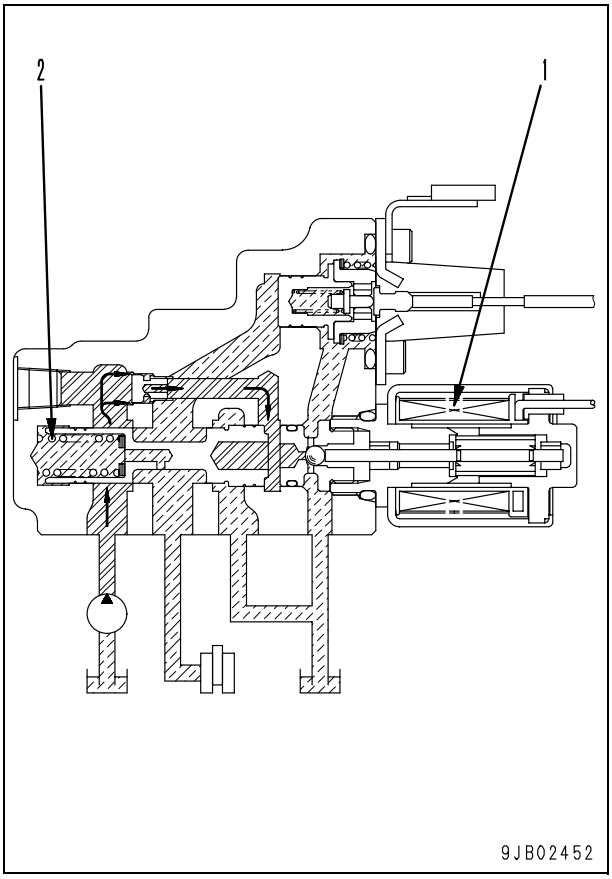

- If current flows in proportional solenoid (1), the solenoid generates thrust in proportion to the current. This thrust of the solenoid is balanced with the sum of the thrust generated by the oil pressure in clutch port and the tension of pressure control valve spring (2), and then the pressure is settled.
- While shifting gears, the lockup clutch oil pressure is reduced temporarily to reduce the shock when shifting gear.
  Oil pressure at this time is controlled so that the lockup piston pushing force balances with the inside pressure of torque converter.

ECMV for stator clutch

Outline

- This valve acts to set the lockup clutch oil pressure to the set pressure, and also to switch the lockup clutch.

  It forms a modulation wave pattern, so the stator clutch is engaged smoothly to reduce the shock when shifting gear. In addition, it prevents generation of peak torque in the power train. As a result, it provides a comfortable ride for the operator and greatly increases the durability of the power train.

Direct travel → torque converter travel

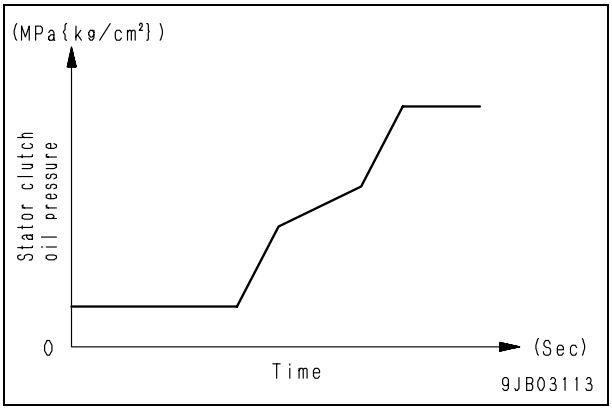

Operation

When traveling in direct range

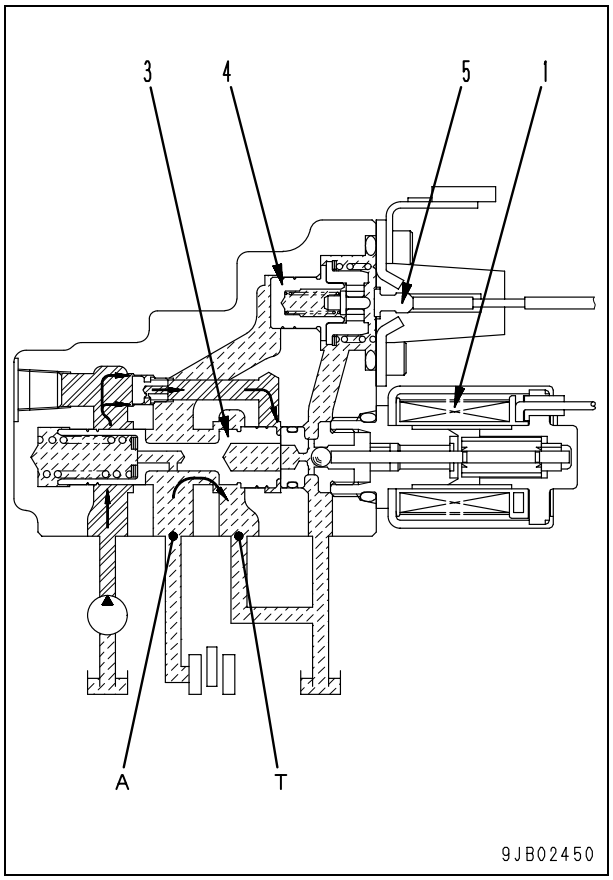

- When traveling in direct (lockup) range, current does not flow to proportional solenoid (1).
  Pressure control valve (3) drains the oil from clutch port (A) through drain port (T), and stator clutch is “released“.
  Also at this time, fill switch (5) is turned “off“ because oil pressure is not applied to pressure detection valve (4).

When traveling in torque converter range

(Direct travel → torque converter travel)

During filling

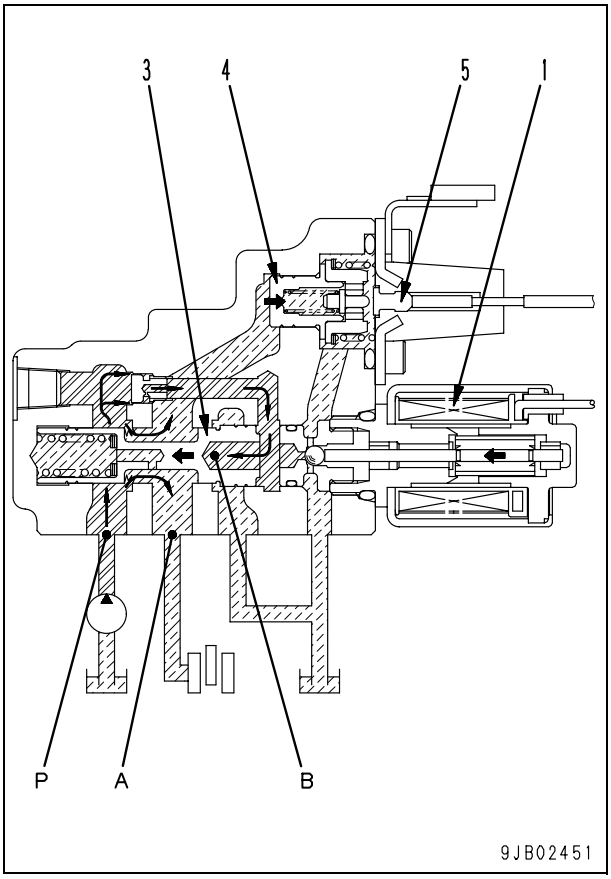

- When traveling in torque converter range current is supplied to proportional solenoid (1), the oil pressure force balanced with the solenoid force is applied to chamber (B) and pushes pressure control valve (3) to the left.As a result, pump port (P) and clutch port (A) are opened and oil starts filling the clutch. If the clutch is filled with oil, fill switch (5) is turned “on“.

Pressure adjustment

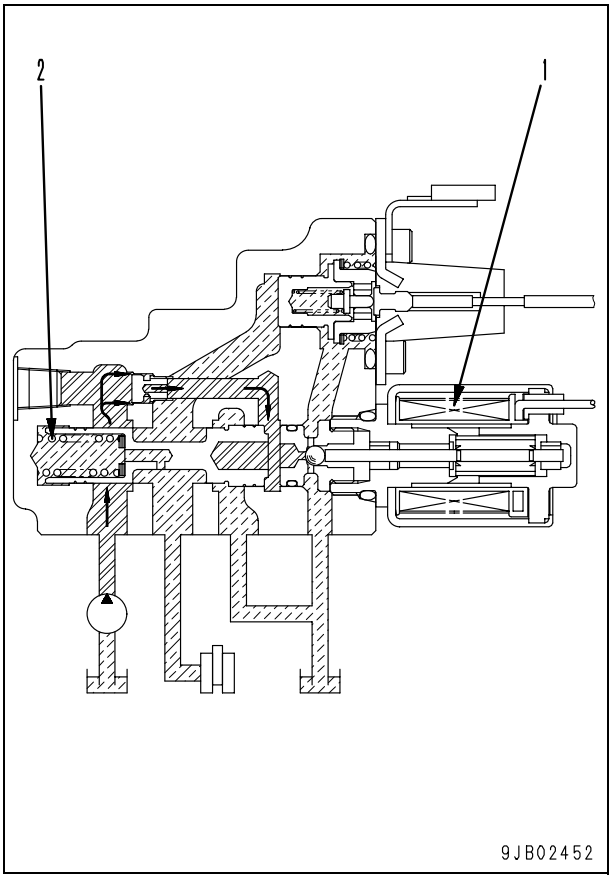

- If current flows in proportional solenoid (1), the solenoid generates thrust in proportion to the current. This thrust of the solenoid is balanced with the sum of the thrust generated by the oil pressure in clutch port and the tension of pressure control valve spring (2), and then the pressure is settled.

Transmission control

★ For steering operation of the Palm Command Steering Control lever (PCCS lever), see Steering, brake control.
★ PCCS: Abbreviation for Palm Command Control System

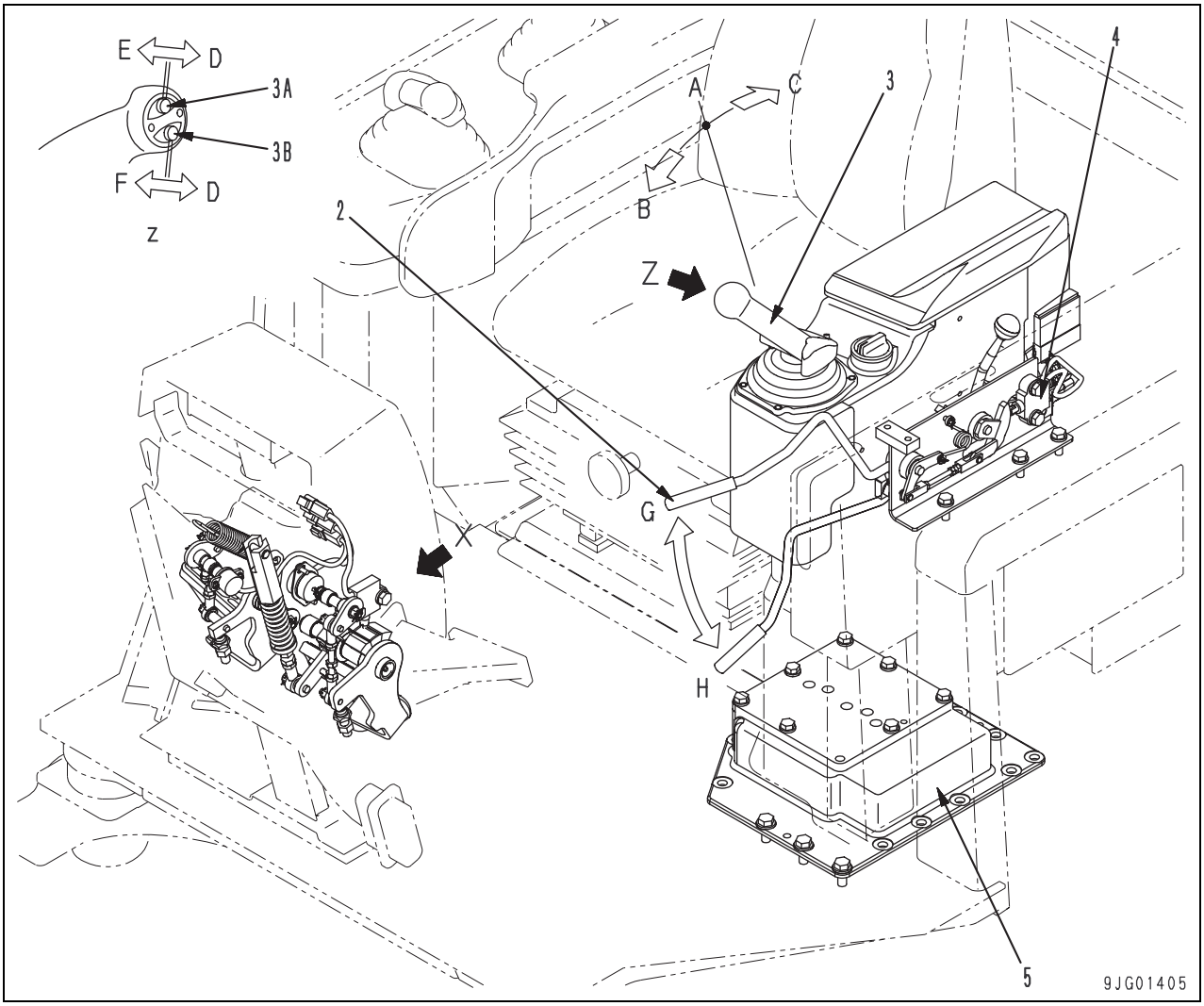

1. Brake pedal
2. Lock lever
3. PCCS lever
   (Forward-Reverse, Gear shift)
   3A. UP switch
   (Gear is shifted up each time this switch is pressed.)
   3B. DOWN switch
   (Gear is shifted down each time this switch is pressed.)
4. Transmission neutral lock
5. Transmission control valve

Lever positions

A: Neutral
B: Forward
C: Reverse
D: OFF
E: Shift UP
F: Shift DOWN
G: Free
H: Lock

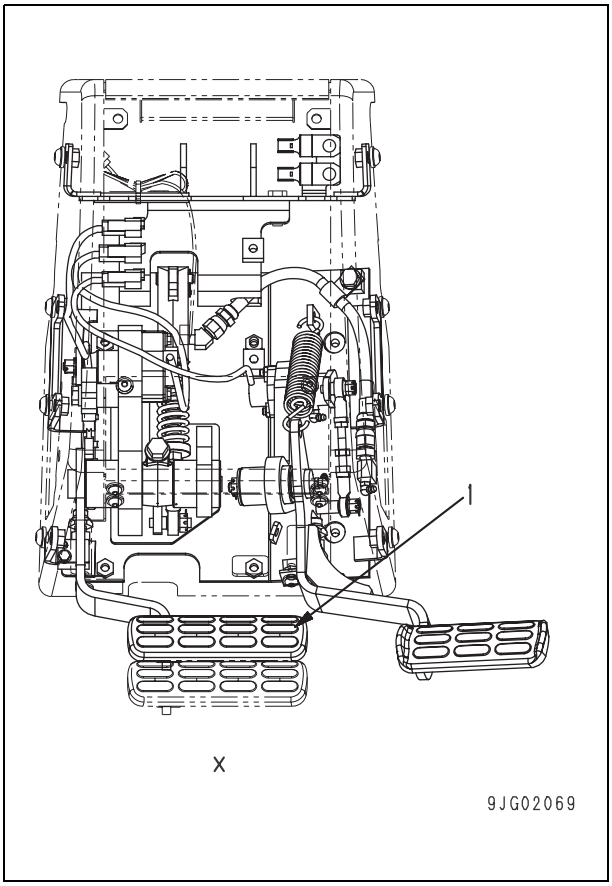

Outline

- The transmission is controlled with PCCS lever (3).
  The PCCS lever is used to select the travel direction and shift the gear.
- Since the safety mechanism is employed, transmission neutral safety switch (4) does not work and the engine does not start unless lock lever (2) is in the LOCK position.

Transmission

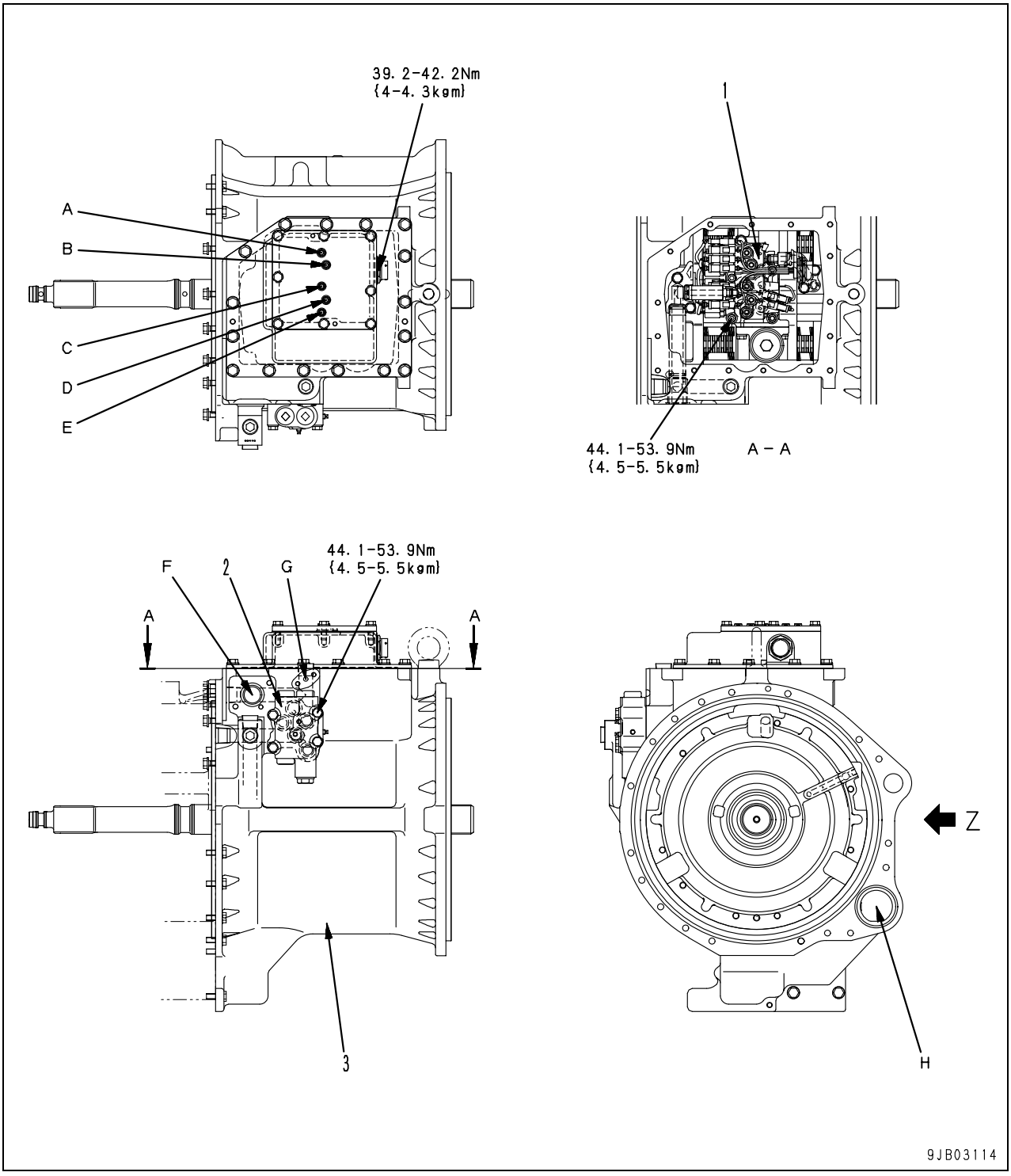

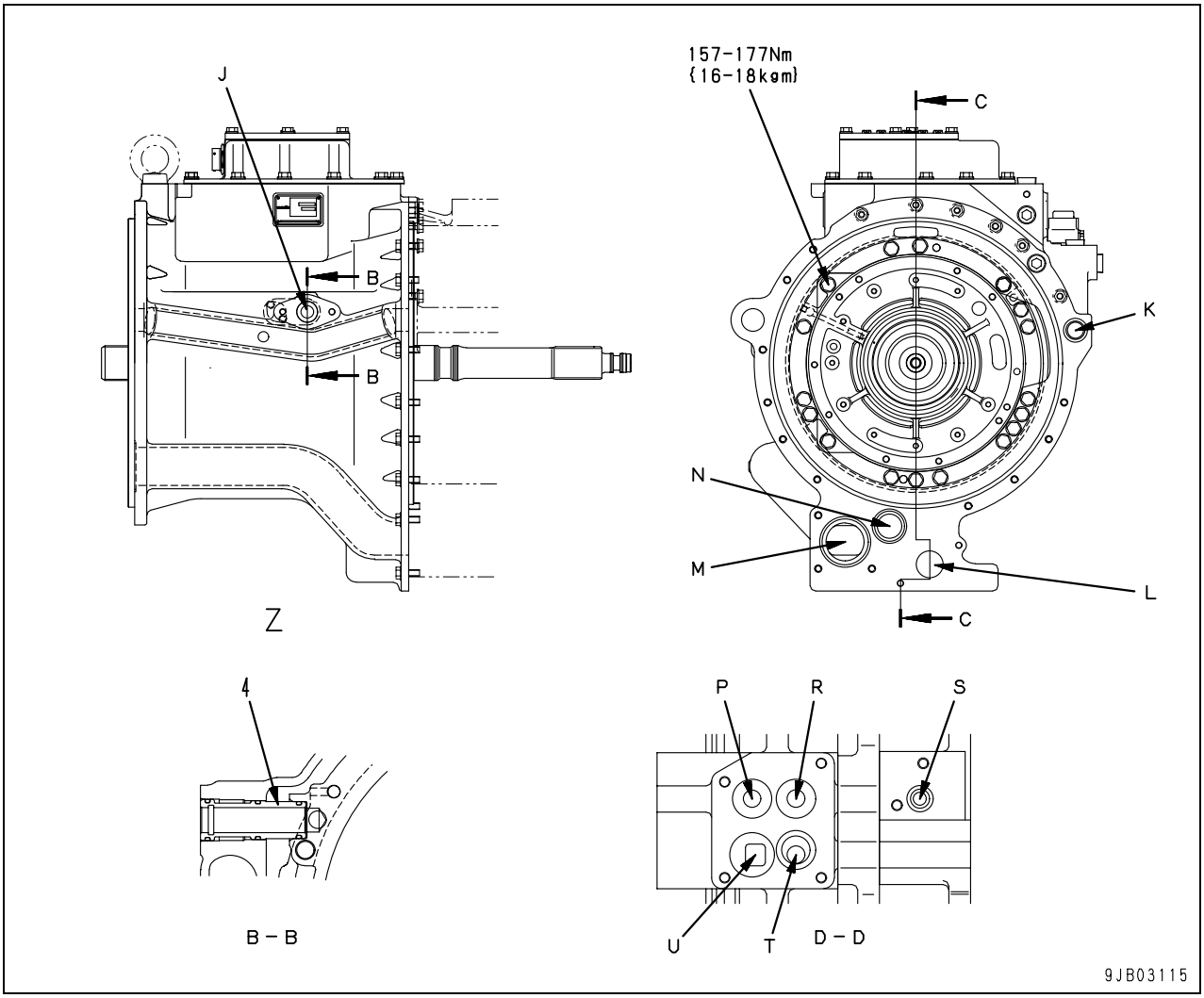

A: 1st clutch pressure pickup port (1ST)
B: 3rd clutch pressure pickup port (3RD)
C: R clutch oil pressure pickup port (R)
D: 2nd clutch pressure pickup port (2ND)
E: F clutch oil pressure pickup port (F)
F: From power train pump
G: To brake control valve
H: From steering case
J: From power train oil cooler
K: To torque converter
L: To scavenging pump
M: To torque converter case
N: From torque converter case
P: To R clutch
R: To 3rd clutch
S: To 1st clutch
T: To 2nd clutch
U: To F clutch

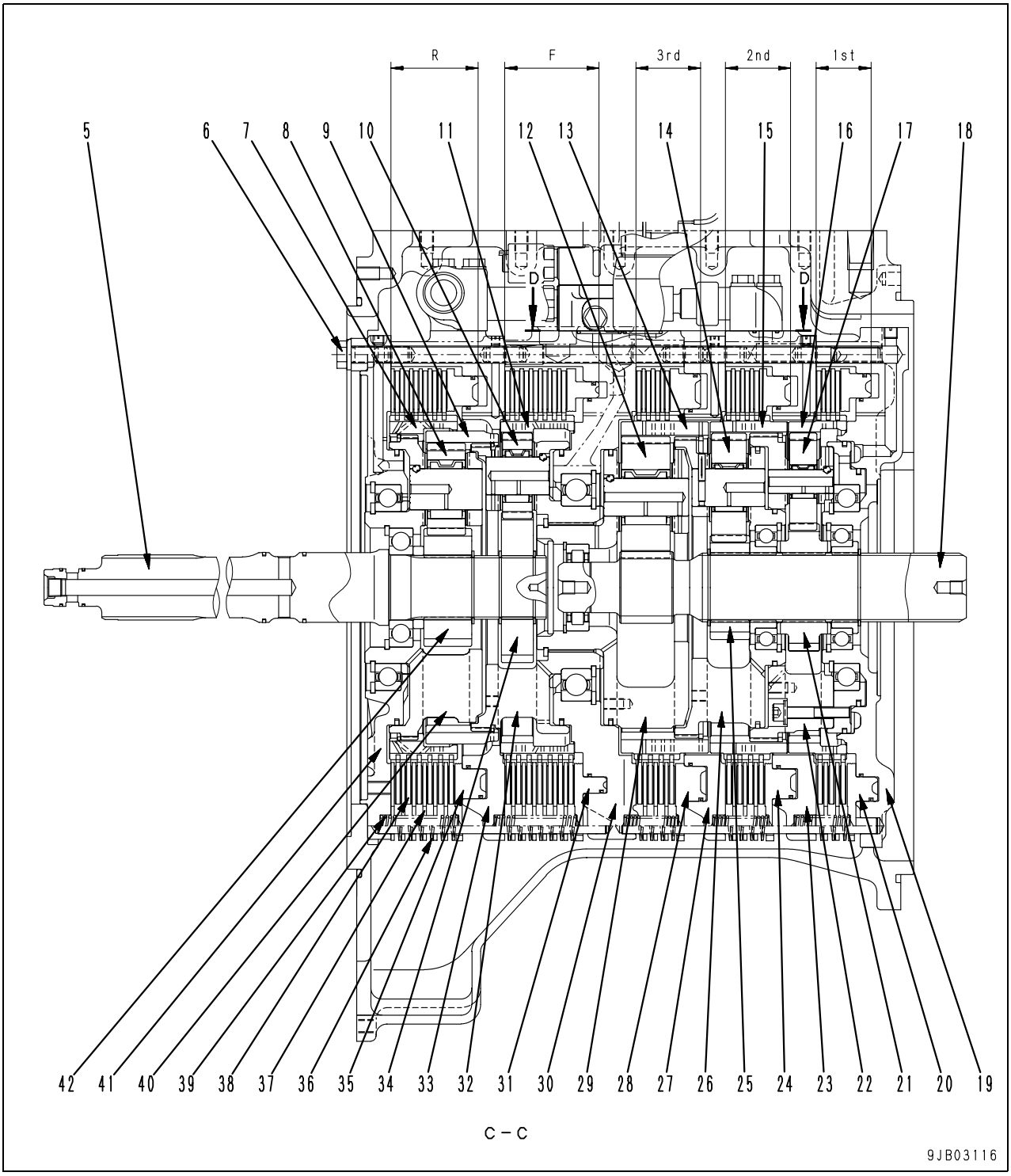
R
F
3rd
2nd
1st
D
D
5
6
7
8
9
10
11
12
13
14
15
16
17
18
42
41
40
39
38
37
36
35
34
33
32
31
30
29
28
27
26
25
24
23
22
21
20
19
C – C
9JB03116

1. Transmission ECMV
2. Main relief valve and torque converter relief valve
3. Transmission case
4. Sleeve
5. Transmission input shaft
6. Tie bolt
7. R ring gear (hub)
8. R planetary pinion (number of teeth: 26)
9. R ring gear (number of internal teeth: 86)
10. F planetary pinion (number of teeth: 24)
11. F ring gear (number of internal teeth: 91)
12. 3rd planetary pinion (number of teeth: 35)
13. 3rd ring gear (number of internal teeth: 89)
14. 2nd planetary pinion (number of teeth: 31)
15. 2nd ring gear (number of internal teeth: 91)
16. 1st ring gear (number of internal teeth: 91)
17. 1st planetary pinion (number of teeth: 27)
18. Transmission output shaft (3rd sun gear)(number of teeth: 19)
19. 1st clutch housing
20. 1st clutch piston
21. 1st sun gear (number of teeth: 37)
22. 1st carrier
23. 2nd clutch housing
24. 2nd clutch piston
25. 2nd sun gear (number of teeth: 29)
26. 2nd carrier
27. 3rd clutch housing
28. 3rd clutch piston
29. 3rd carrier
30. F clutch housing
31. F clutch piston
32. F carrier
33. R clutch housing
34. F sun gear (number of teeth: 44)
35. R clutch piston
36. Washer spring
37. Clutch plate
38. Clutch disc
39. Piston return spring
40. R carrier
41. Front housing
42. R sun gear (number of teeth: 34)

Outline

- The transmission adopted is a “forward 3-gear speed and reverse 3-gear speed“ transmission which consists of the planetary gear mechanisms and the disc clutches.
- Out of the 5 sets of planetary gear mechanisms and disc clutches, 2 clutches are fixed hydraulically by the operation of ECMV to select 1 rotation direction and 1 gear speed.
- The transmission transfers the power received by the transmission input shaft to the output shaft while changing the gear speed (forward 1st-3rd or reverse 1st-3rd) by any combination of the F, R clutches and 3 speed clutches.

Number of plates and disk used

Clutch No.	Number of plates	Number of discs
R clutch	6	6
F clutch	6	7
3rd clutch	3	4
2nd clutch	3	4
1st clutch	2	3

Combinations of clutches at respective gear speeds and reduction ratio

Gear speed	Operated clutches	Reduction ratio
Forward 1st	F x 1st	1.705
Forward 2nd	F x 2nd	1.151
Forward 3rd	F x 3rd	0.540
Neutral	*	—
Reverse 1st	R x 1st	1.406
Reverse 2nd	R x 2nd	0.949
Reverse 3rd	R x 3rd	0.445

*: The 1st, 2nd, or 3rd clutch is filled with low-pressure oil.

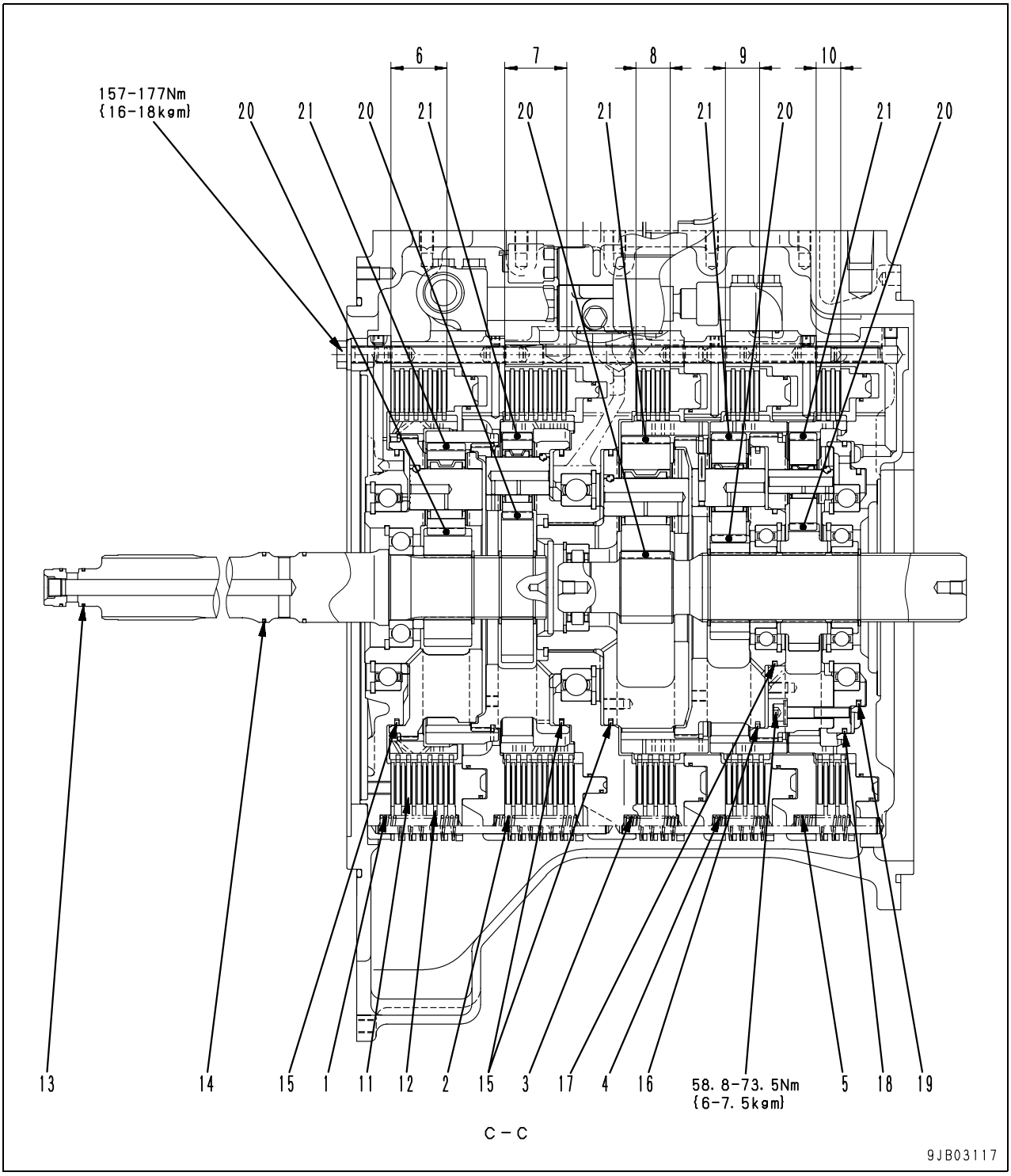
6
7
8
9
10
157-177Nm
{16-18kgm}
20
21
20
21
20
21
21
20
21
20
13
14
15
1
11
12
2
15
3
17
4
16
58.8-73.5Nm
{6-7.5kgm}
5
18
19
C-C
9JB03117

Unit: mm

No.	Check item		Criteria					Remedy
1	R clutch spring (12 pcs.)		Standard size			Repair limit		Replace
			Free length	Installation length	Installation load	Free length	Installation load	
			81.7	72.4	59.8 N {6.1 kg}	76.8	51.0 N {5.2 kg}	
2	F clutch spring (12 pcs.)		81.7	76.4	34.3 N {3.5 kg}	76.8	29.4 N {3.0 kg}	
3	3rd clutch spring (12 pcs.)		70.0	50.2	97.1 N {9.9 kg}	65.8	82.4 N {8.4 kg}	
4	2nd clutch spring (12 pcs.)		70.0	51.6	90.2 N {9.2 kg}	65.8	76.5 N {7.8 kg}	
5	1st clutch spring (12 pcs.)		66.0	51.8	66.7 N {6.8 kg}	62.0	56.9 N {5.8 kg}	
6	Total thickness of R clutch assembly consisting of 6 discs and 6 plates		Standard size		Tolerance	Repair limit		
			51.6		±0.35	48.4		
7	Total thickness of F clutch assembly consisting of 7 discs and 6 plates		57.0		±0.36	53.3		
8	Total thickness of the 3rd clutch assembly consisting of 4 discs and 3 plates		31.2		±0.26	29.1		
9	Total thickness of the 2nd clutch assembly consisting of 4 discs and 3 plates		31.2		±0.26	29.1		
10	Total thickness of 1st clutch assembly consisting of 3 discs and 2 plates		22.6		±0.22	21.0		
11	Thickness of the clutch disc		5.4		±0.1	4.9		
12	Thickness of the clutch plate		3.2		±0.1	2.9		
13	Wear of the input shaft seal ring (small)	Width	2.56		-0.01 -0.03	2.30		
		Thickness	1.7		±0.1	1.55		
14	Wear of the input shaft seal ring (large)	Width	3.0		-0.01 -0.03	2.70		
		Thickness	2.7		±0.1	2.55		
15	Wear of front housing, F clutch housing, and 3rd carrier seal ring	Width	4.0		-0.01 -0.04	3.60		
		Thickness	5.0		±0.15	4.85		
16	Wear of the 2nd carrier seal ring (large)	Width	4.0		-0.01 -0.04	3.60		
		Thickness	4.0		±0.15	3.85		
17	Wear of the 2nd carrier seal ring (small)	Width	4.0		-0.01 -0.04	3.60		
		Thickness	4.0		±0.15	3.85		

Unit: mm

No.	Check item		Criteria			Remedy
			Standard size	Tolerance	Repair limit	
18	Wear of the 1st carrier seal ring (large)	Width	4.0	-0.01 -0.04	3.60	
		Thickness	4.0	±0.15	3.85	
19	Wear of the 1st carrier seal ring (small)	Width	4.0	-0.01 -0.04	3.60	
		Thickness	5.0	±0.15	4.85	
20	Backlash between sun gear and planetary pinion	R, F, 3rd, 1st	0.14 - 0.35			Replace
		2nd	0.13 - 0.32			
21	Backlash between planetary pinion and ring gear	R	0.15 - 0.39			
		F, 2nd, 1st	0.15 - 0.38			
		3rd	0.16 - 0.42			

Disc clutch

Structure

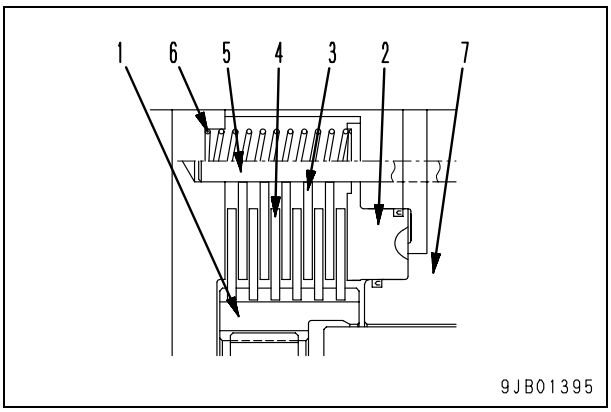

- The disc clutch consists of piston (2), plates (3), discs (4), pin (5), return spring (6) etc. to fix ring gear (1).
- Inside teeth of disc (4) are engaged with outside teeth of ring gear (1).
- Plate (3) is assembled to clutch housing (7) with pin (5).

Operation

When clutch is “engaged“ (fixed)

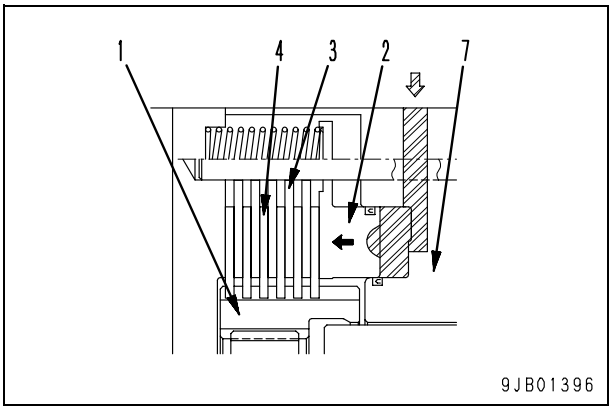

- The oil from ECMV is sent with pressure to the rear side of piston (2) through oil the passage of housing (7) and pushes piston (2) leftward.
- Piston (2) contacts plate (3) closely against disc (4) to stop rotation of disc (4) by use of the friction force generated between them.
- Since inside teeth of disc (4) are engaged with outside teeth of ring gear (1), move of ring gear (1) is stopped.

When clutch is “disengaged“ (released)

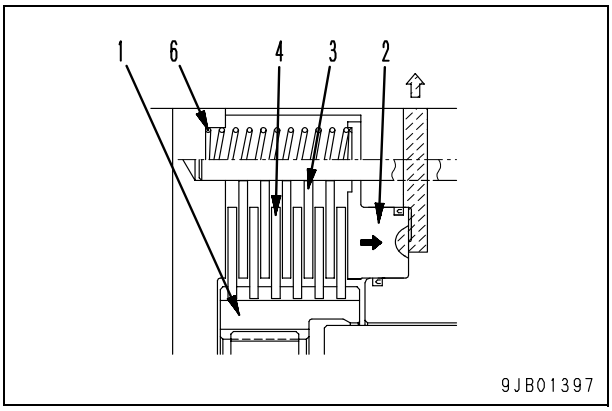

- As the oil from ECMV is stopped, piston (2) is pushed back rightward by return spring (6).
- The friction force between plates (3) and discs (4) is released and ring gear (1) is released.

Oil passage in speed clutch

★ The figure shows the case in which “1st“ gear speed is selected.

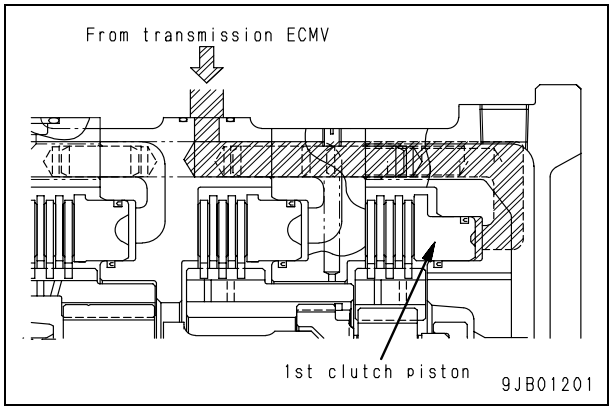

- When the steering/directional/gear shift lever is set in the “neutral“ position, the 1st, 2nd, or 3rd speed is selected.
- The piston chamber of the clutch corresponding to the selected gear speed is filled with oil by electronically controlling the hydraulic circuit of each clutch.
- When the steering/directional/gear shift lever is shifted from the “neutral“ position to the“forward“ or “reverse“ position, the pump is required to supply oil of quantity to fill the piston chamber of the F clutch or R clutch.
- When the gear speed is changed from “forward 1st“ to “forward 2nd“, the pump is required to supply oil of only quantity to fit the plate and disc of the 2nd clutch together since the F clutch has been filled with the oil.
- The time lag in the gear shifting operation is reduced by controlling the oil in the clutch circuit as explained above.

Power transmitting route
Forward 1st speed

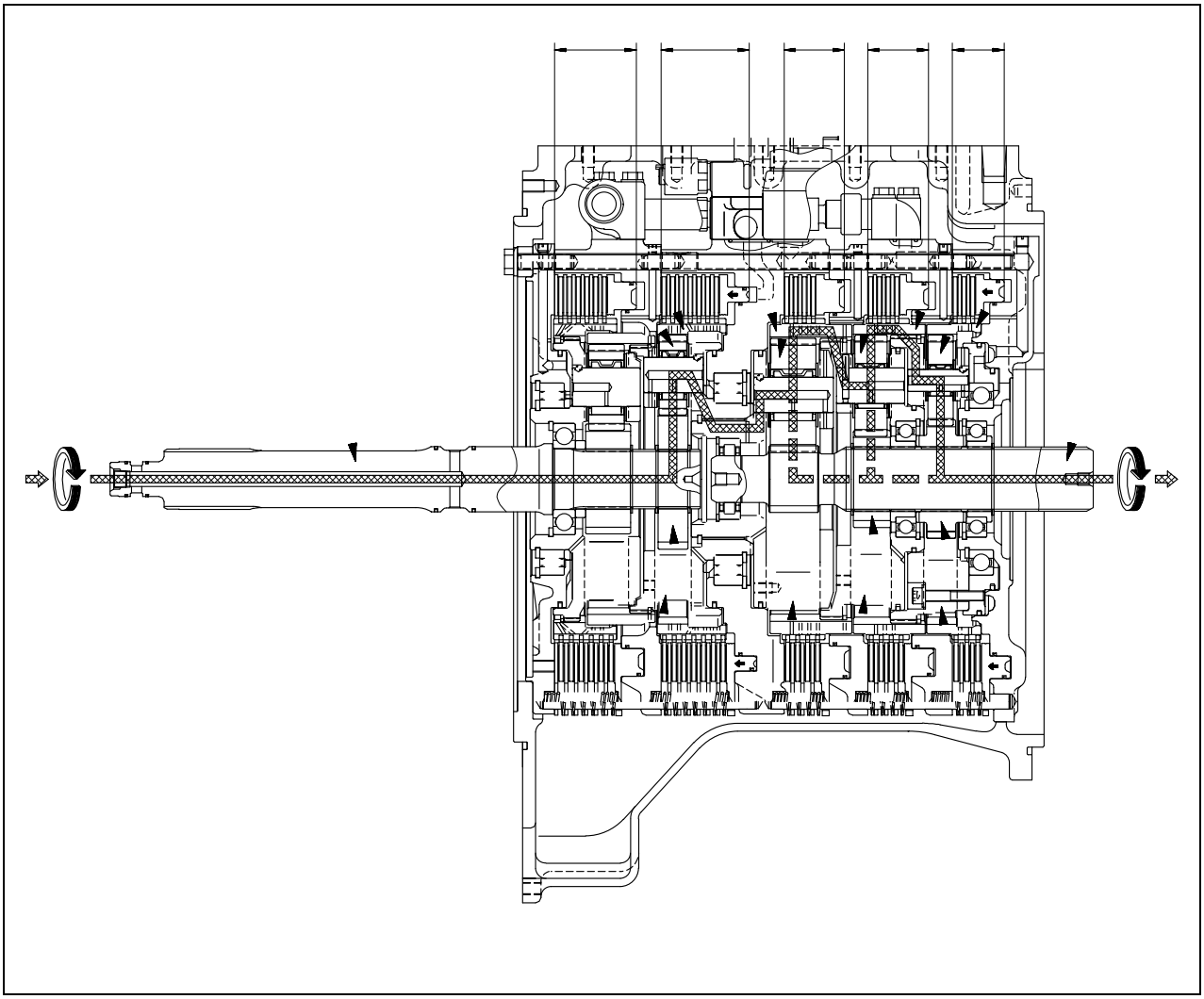

- When the transmission is set to the forward 1st speed, the F clutch and 1st clutch are engaged. The power transmitted from the torque converter to input shaft (1) is then transmitted to output shaft (22).
- The F clutch is actuated by the oil pressure applied to the F clutch piston, and holds F ring gear (4). The 1st clutch is actuated by the oil pressure applied to the 1st clutch piston, and holds 1st clutch inner drum (19).
- The power from the torque converter is transmitted to F planetary pinion (3) through input shaft (1) and F sun gear (2).
- As F ring gear (4) is held by the F clutch, the power transmitted to F planetary pinion (3) rotates 3rd carrier (11) through F carrier (10) which is connected with spline.
- The rotation of 3rd carrier (11) is transmitted through 3rd planetary pinion (12) to 3rd ring gear (13).
- The power transmitted to 3rd planetary pinion (12) is also transmitted to output shaft (22) which has the 3rd sun gear functions.
- 3rd ring gear (13) and 2nd carrier (14) are meshed with each other and rotate integrally. Accordingly, the rotation of 2nd carrier (14) is transmitted from 2nd planetary pinion (15) to 2nd ring gear (16).
- The power transmitted to 2nd planetary pinion (15) is also transmitted from 2nd sun gear (21) to output shaft (22).
- 2nd ring gear (16) and 1st carrier (17) are meshed with each other and rotate integrally. Accordingly, the rotation of 1st carrier (17) is transmitted to 1st planetary pinion (18).
- Since 1st ring gear (19) is held by the 1st clutch, the power transmitted to 1st planetary pinion (18) is transmitted through 1st sun gear (20) to output shaft (22).

Forward 2nd speed

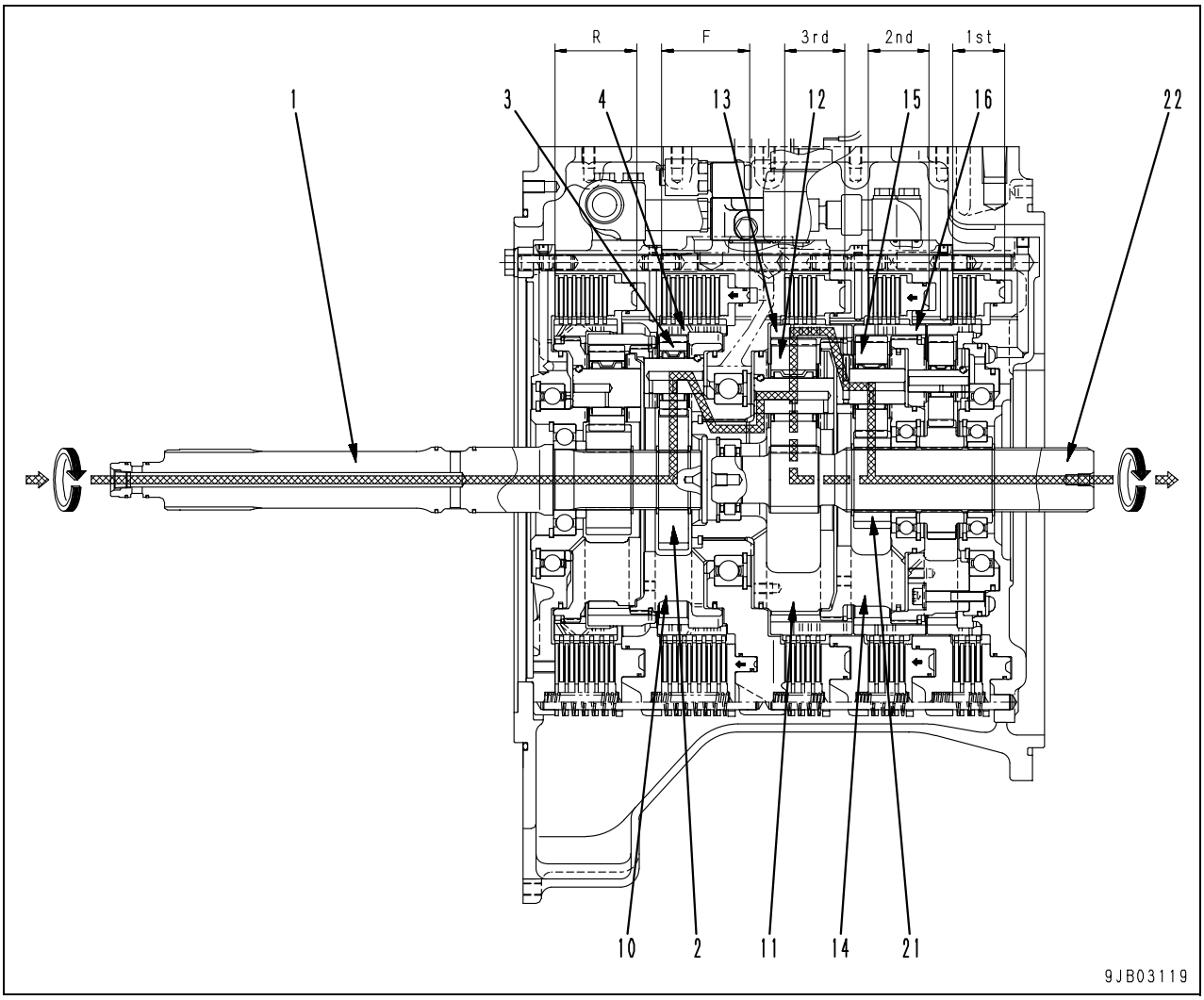

- When the transmission is set to the forward 2nd speed, the F clutch and 2nd clutch are engaged. The power transmitted from the torque converter to input shaft (1) is then transmitted to output shaft (22).
- The F clutch is actuated by the oil pressure applied to the F clutch piston, and holds F ring gear (4). The 2nd clutch is actuated by the oil pressure applied to the 2nd clutch piston, and holds 2nd ring gear (16).
- The power from the torque converter is transmitted to F planetary pinion (3) through input shaft (1) and F sun gear (2).
- As F ring gear (4) is held by the F clutch, the power transmitted to F planetary pinion (3) rotates 3rd carrier (11) through F carrier (10) which is connected with spline.
- The rotation of 3rd carrier (11) is transmitted through 3rd planetary pinion (12) to 3rd ring gear (13).
- The power transmitted to 3rd planetary pinion (12) is also transmitted to output shaft (22) which has the 3rd sun gear functions.
- 3rd ring gear (13) and 2nd carrier (14) are meshed with each other and rotate integrally. Accordingly, the rotation of 2nd carrier (14) is transmitted to 2nd planetary pinion (15).
- Since 2nd ring gear (16) is fixed by the 2nd clutch, the power transmitted to 2nd planetary pinion (15) is transmitted through 2nd sun gear (21) to output shaft (22).

Forward 3rd speed

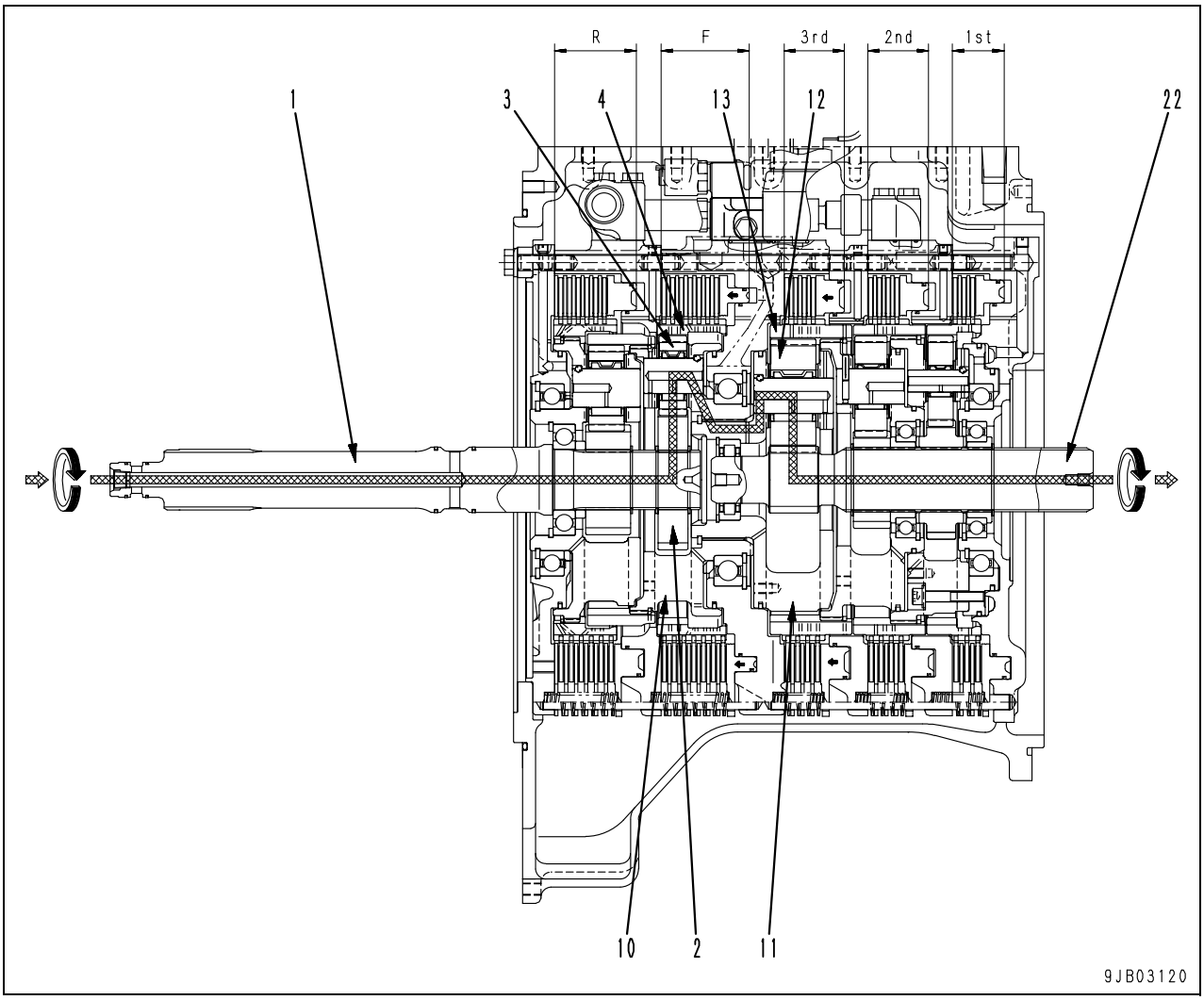

- When the transmission is set to the forward 3rd speed, the F clutch and 3rd clutch are engaged. The power transmitted from the torque converter to input shaft (1) is then transmitted to output shaft (22).
- F clutch fixes F ring gear (4) being activated with the oil pressure applied to F clutch piston. 3rd clutch fixes 3rd ring gear (13) being activated with the oil pressure applied to 3rd clutch piston.
- The power from the torque converter is transmitted to F planetary pinion (3) through input shaft (1) and F sun gear (2).
- As F ring gear (4) is held by the F clutch, the power transmitted to F planetary pinion (3) rotates 3rd carrier (11) through F carrier (10) which is connected with spline.
- Since 3rd ring gear (13) is held by the 3rd clutch, the power transmitted to 3rd carrier (11) is transmitted from 3rd planetary pinion (12) to output shaft (22).

Reverse 1st speed

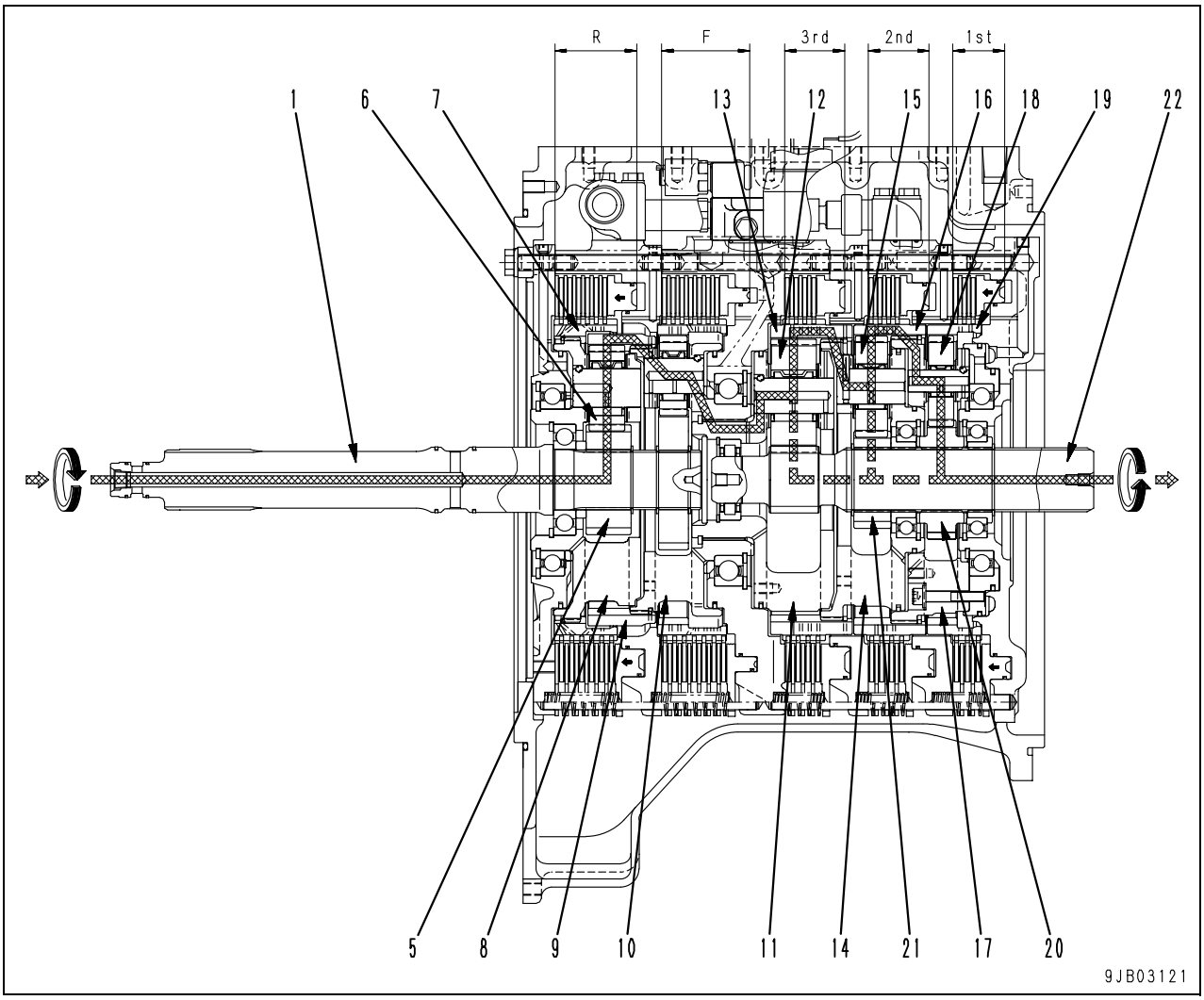

- When the transmission is set to the reverse 1st speed, the R clutch and 1st clutch are engaged. The power transmitted from the torque converter to input shaft (1) is then transmitted to output shaft (22).
- The R clutch is actuated by the oil pressure applied to the R clutch piston, and holds R ring gear (7). The 1st clutch is actuated by the oil pressure applied to the 1st clutch piston, and holds 1st clutch inner drum (19).
- The power from the torque converter is transmitted to R planetary pinion (6) through input shaft (1) and R sun gear (5).
- Since R ring gear (7) is meshed with R carrier (8) and held by the R clutch, R planetary pinion (6) rotates R ring gear (9).The rotation of R ring gear (9), the direction of which is opposite to that of input shaft (1), rotates 3rd carrier (11) through F carrier (10) which is connected with spline.
- The rotation of 3rd carrier (11) is transmitted through 3rd planetary pinion (12) to 3rd ring gear (13).
- The power transmitted to 3rd planetary pinion (12) is also transmitted to output shaft (22) which has the 3rd sun gear functions.
- 3rd ring gear (13) and 2nd carrier (14) are meshed with each other and rotate integrally. Accordingly, the rotation of 2nd carrier (14) is transmitted from 2nd planetary pinion (15) to 2nd ring gear (16).
- The power transmitted to 2nd planetary pinion (15) is also transmitted from 2nd sun gear (21) to output shaft (22).
- 2nd ring gear (16) and 1st carrier (17) are meshed with each other and rotate integrally. Accordingly, the rotation of 1st carrier (17) is transmitted to 1st planetary pinion (18).
- Since 1st ring gear (19) is held by the 1st clutch, the power transmitted to 1st planetary pinion (18) is transmitted through 1st sun gear (20) to output shaft (22).

Transmission ECMV

★ ECMV: Abbreviation for Electronic Control Modulation Valve
★ Don't try to disassemble it since adjustment for maintaining the performance will be needed.

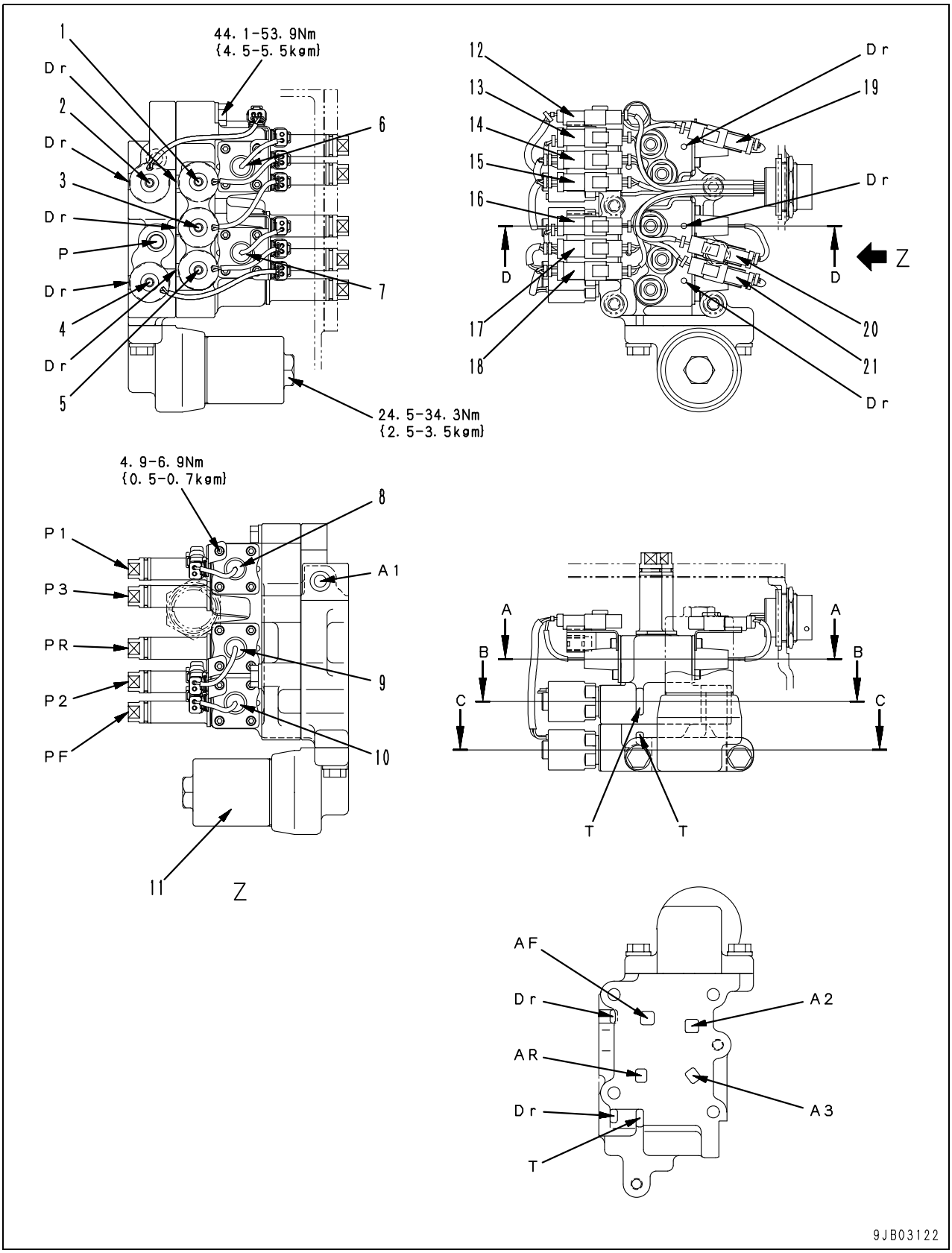

AF: To F clutch
AR: To R clutch
A1: To 1st clutch
A2: To 2nd clutch
A3: To 3rd clutch
P: From power train pump
T: Drain
Dr: Drain
PF: F clutch oil pressure pickup port
PR: R clutch oil pressure pickup port
P1: 1st clutch oil pressure pickup port
P2: 2nd clutch oil pressure pickup port
P3: 3rd clutch oil pressure pickup port

1. 3rd clutch proportional solenoid
2. 1st clutch proportional solenoid
3. R clutch proportional solenoid
4. F clutch proportional solenoid
5. 2nd clutch proportional solenoid
6. 3rd clutch fill switch
7. 2nd clutch fill switch
8. 1st clutch fill switch
9. R clutch fill switch
10. F clutch fill switch
11. Transmission oil filter
12. Connector for 1st clutch proportional solenoid
13. Connector for 3rd clutch fill switch
14. Connector for 3rd clutch proportional solenoid
15. Connector for R clutch proportional solenoid
16. Connector for 2nd clutch fill switch
17. Connector for 2nd clutch proportional solenoid
18. Connector for F clutch proportional solenoid
19. Connector for 1st clutch fill switch
20. Connector for R clutch fill switch
21. Connector for F clutch fill switch

Operation table of ECMV

ECMV / sgear speed	F	R	1st	2nd	3rd
N			○	○	○
F1	○		○		
F2	○			○	
F3	○				○
R1		○	○		
R2		○		○	
R3		○			○

★ When the directional lever is in (neutral) position, the speed clutch of the speed selected by gear shift lever activates.

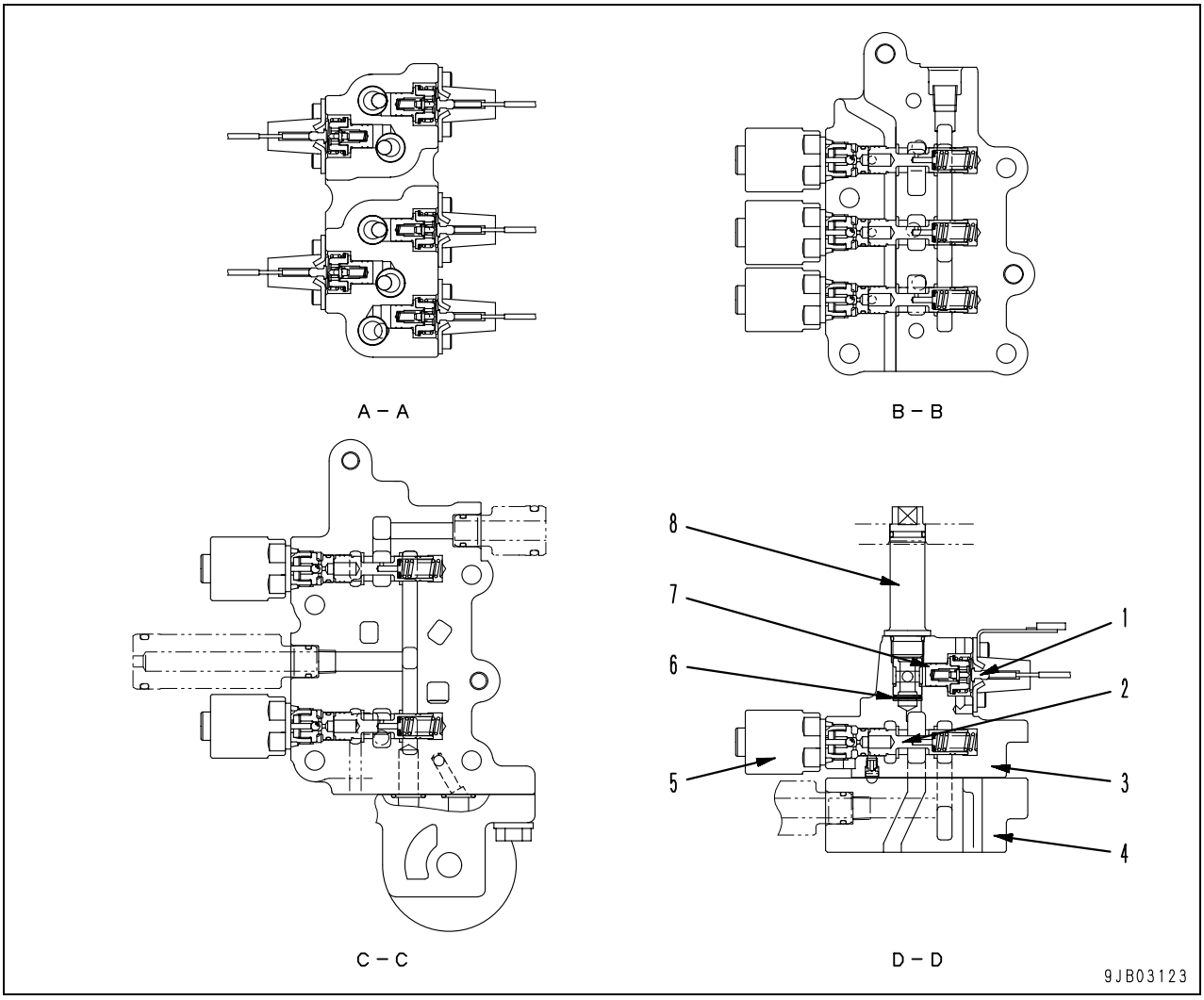

1. Fill switch
2. Pressure control valve
3. Body (upper)
4. Body (lower)
5. Proportional solenoid
6. Filter
7. Pressure detection valve
8. Sleeve

Outline of ECMV

- The ECMV consists of 1 pressure control valve and 1 fill switch.
- **Pressure control valve**
  A proportional solenoid in this valve receives a current sent from the controller and this valve converts it to an oil pressure.
- **Fill switch**
  This switch detects that the clutch is filled with oil and has the following functions.

1. Outputs a signal (a fill signal) to the controller to notify that filling is completed when the clutch is filled with oil.
2. Keeps outputting signals (fill signals) to the controller to notify whether oil pressure is applied or not while oil pressure is applied to the clutch.

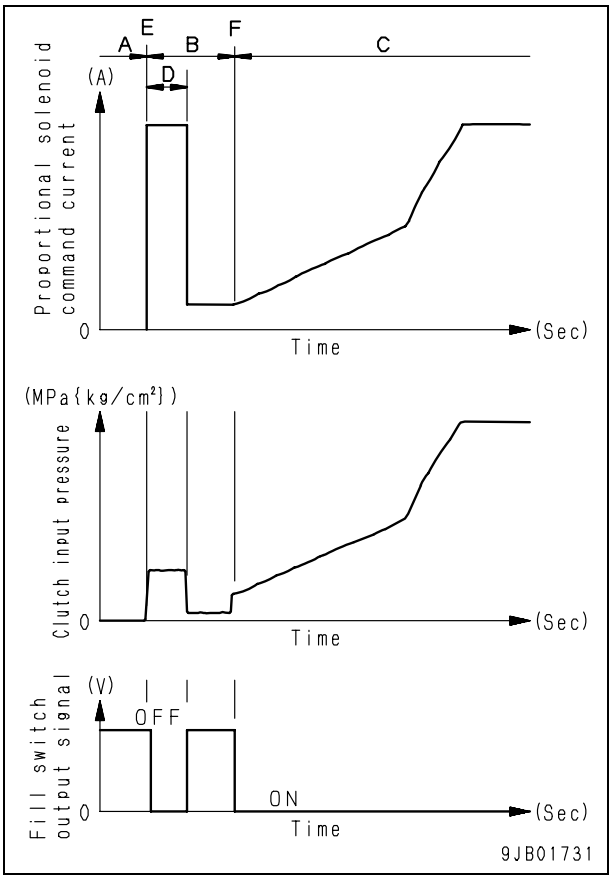

Range A: Before shifting gear (When draining)
Range B: During filling
Range C: Pressure adjustment
Range D: During filling (During triggering)
Point E: Start of filling
Point F: Finish of filling

★ The logic is so made that the controller will not recognize completion of filling even if the fill switch is turned “ON“ during triggering (Range D).

ECMV and proportional solenoid

- For each ECMV, 1 proportional solenoid is installed.
  The proportional solenoid generates thrust shown below according to the command current from the controller.
  The thrust generated by the proportional solenoid is applied to the pressure control valve spool to generate oil pressure as shown in the figure below. Accordingly, the thrust is changed by controlling the command current to operate the pressure control valve to control the flow and pressure of the oil.

Current - propulsion force characteristics of proportional solenoid

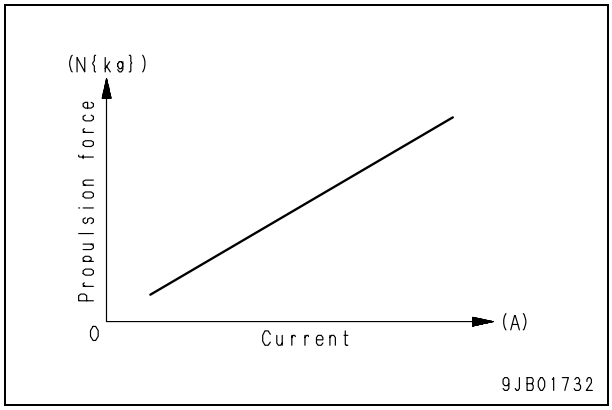

Propulsion force - Hydraulic pressure characteristics of proportional solenoid

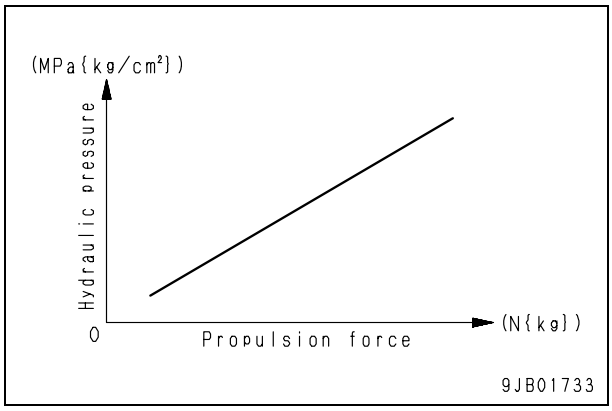

ECMV and fill switch

- For each ECMV, 1 fill switch is installed.
  If the clutch is filled with oil, the fill switch is turned “ON“ by the pressure of the clutch. The oil pressure is built up according to this signal.

Operation of ECMV

- ECMV is controlled with the command current sent from the controller to the proportional solenoid and the fill switch output signal.
  The relationship between the proportional solenoid command current of ECMV, clutch input pressure, and fill switch output signal is shown below.

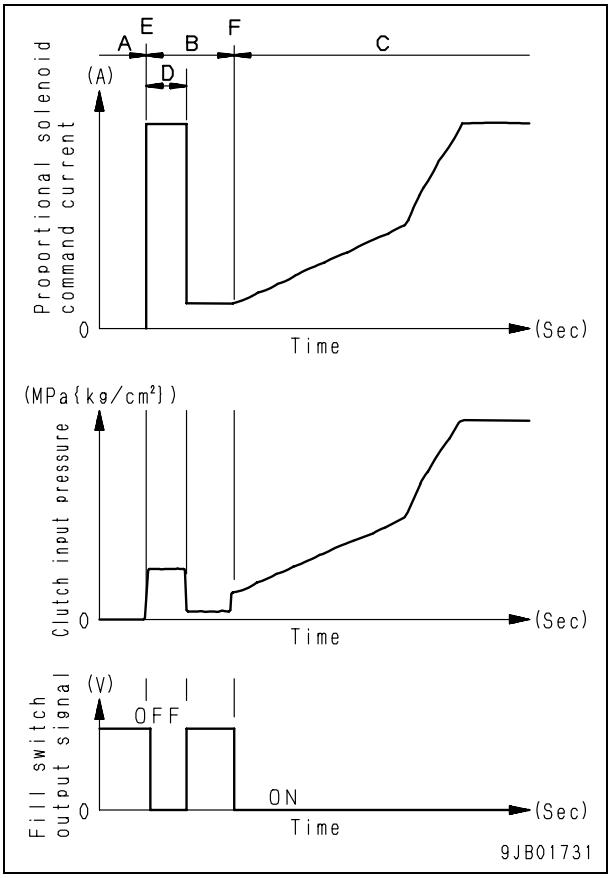

Range A: Before shifting gear (When draining)
Range B: During filling
Range C: Pressure adjustment
Range D: During filling (During triggering)
Point E: Start of filling
Point F: Finish of filling

★ The logic is so made that the controller will not recognize completion of filling even if the fill switch is turned “ON“ during triggering (Range D).

- When gear is shifted with gear shift switch, the clutch is compressed by piston. If high pressure is suddenly applied, the piston suddenly engages clutch, causing sudden start of machine and excessive shock.
  ECMV reduces a shock at the start of the machine by increasing the oil pressure applied to the piston gradually to set pressure, and puts clutch smoothly “engaged“. It aims to increase durability of power transmitting route and enhances an operator comfort.

Before shifting gear (when draining) (Range A in chart)

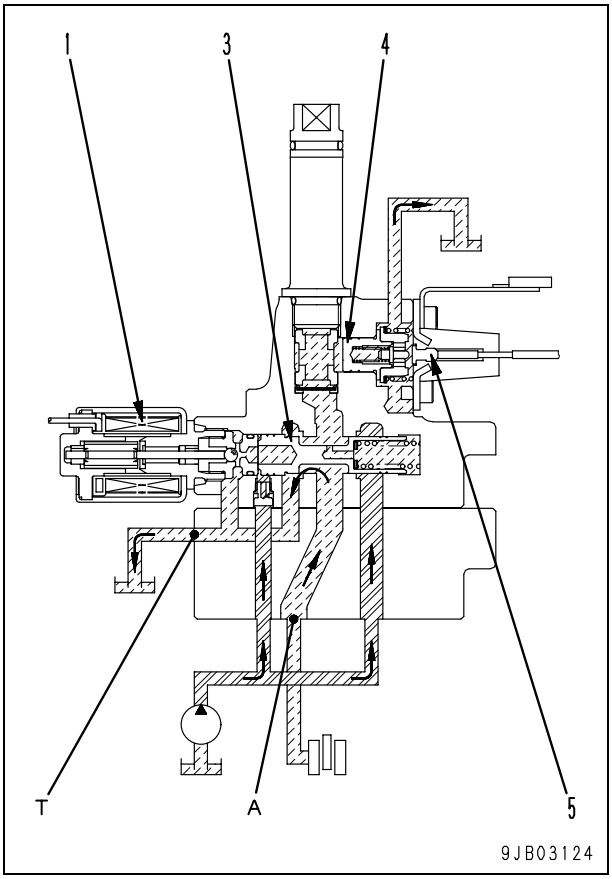

- Under the condition where any current is not sent to the proportional solenoid (1), pressure control valve (3) drains the oil from clutch port (A) through drain port (T).
  Also at this time, fill switch (5) is turned “off“ because oil pressure is not applied to pressure detection valve (4).

During filling (Range B in chart)

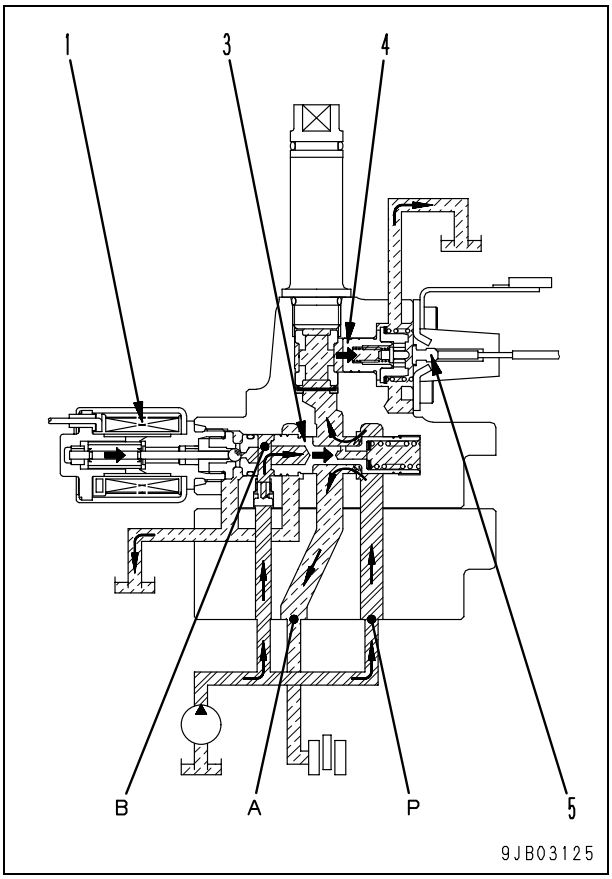

- If current is supplied to proportional solenoid (1) with no oil in the clutch, the oil pressure force balanced with the solenoid force is applied to chamber (B) and pushes pressure control valve (3) to the right. As a result, pump port (P) and clutch port (A) are opened and oil starts filling the clutch. If the clutch is filled with oil, fill switch (5) is turned “on“.

Pressure adjustment (Range C in chart)

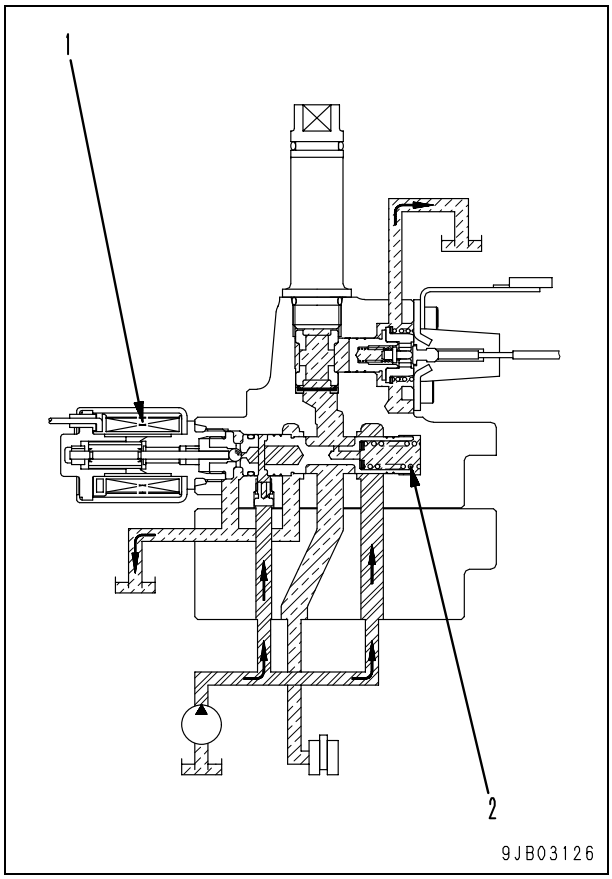

- If current flows in proportional solenoid (1), the solenoid generates thrust in proportion to the current. This thrust of the solenoid is balanced with the sum of the thrust generated by the oil pressure in clutch port and the tension of pressure control valve spring (2), and then the pressure is settled.

Main relief valve and torque converter relief valve

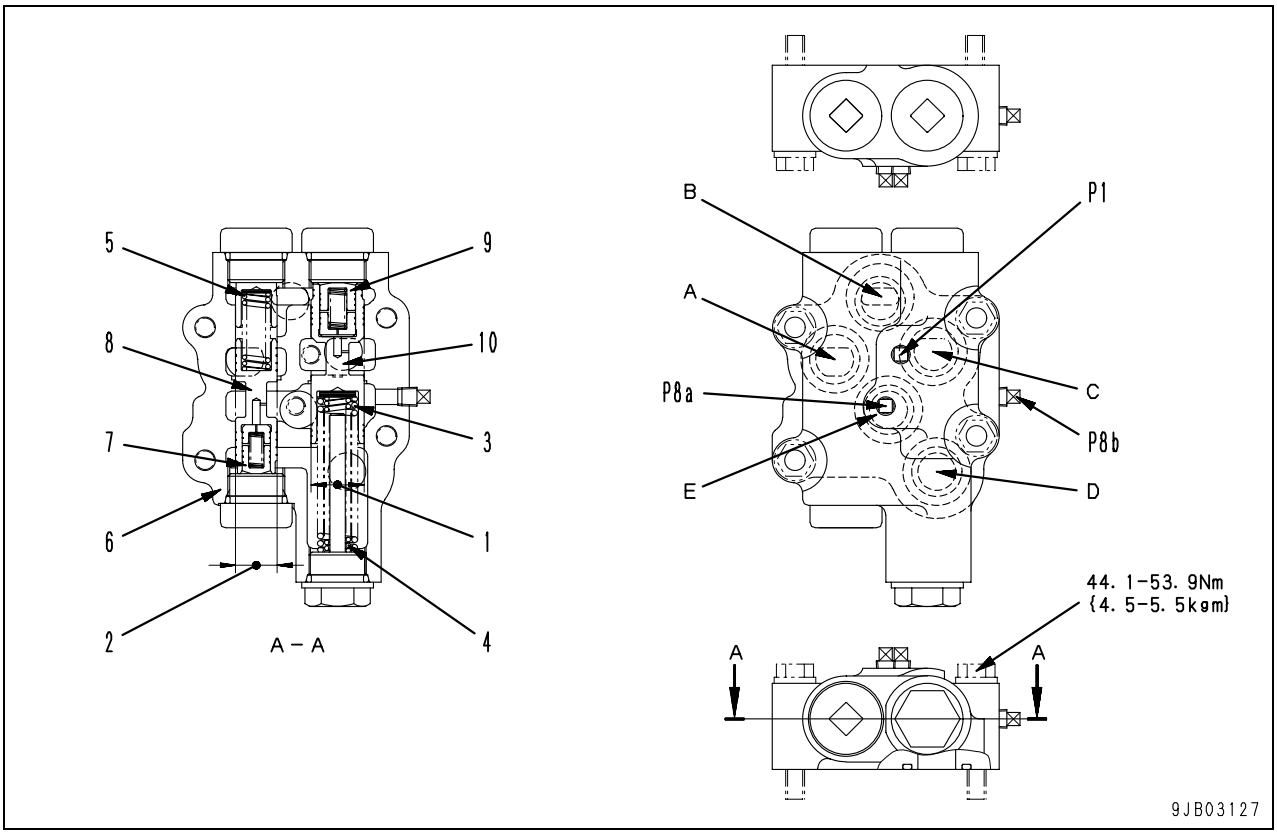

Unit: mm

No.	Check item	Criteria					Remedy
1	Clearance between main relief valve and body	Standard size	Tolerance		Standard clearance	Clearance limit	Replace
			Shaft	Hole			
		28	-0.035 -0.045	+0.013 0	0.035 – 0.058	0.078	
2	Clearance between the torque converter relief valve and the body	22	-0.035 -0.045	+0.013 0	0.035 – 0.058	0.078	
3	Main relief valve spring (outside)	Standard size			Repair limit		
		Free length	Installation length	Installation load	Free length	Installation load	
		122	78.0	481 N {49 kg}	118.3	457 N {46.6 kg}	
4	Main relief valve spring (inside)	108	78.0	368 N {37.5 kg}	104.8	349 N {35.6 kg}	
5	Torque converter relief valve spring	50	40.5	182 N {18.6 kg}	48.5	174 N {17.7 kg}	

6. Body
7. Piston
8. Torque converter relief valve
9. Piston
10. Main relief valve

A: Drain (Torque converter relief)
B: Drain
C: From pump
D: Drain
E: To torque converter
P1: Main relief oil pressure pickup port
P8a: Torque converter relief oil pressure pickup port
P8b: Torque converter inlet oil pressure pickup port

Outline

Torque converter relief valve

- The torque converter relief valve maintains the oil pressure in the torque converter inlet circuit always below the set pressure in order to protect the torque converter from abnormally high pressure.
  Set pressure:
  1.06 ± 0.05 MPa {10.8 ± 0.5 kg/cm²}
  (Cracking pressure)

Main relief valve

- The main relief valve is keeping each hydraulic circuit of the transmission and the parking brake at set pressure.
  Set pressure:
  3.18 ± 0.1 MPa {32.4 ± 1.0 kg/cm²}
  (Engine at rated speed)

Operation

Operation of torque converter relief valve

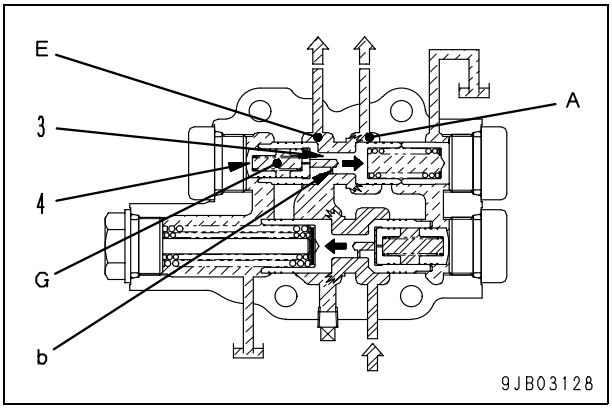

- The oil from the main relief valve is conducted to the torque converter through port (E) and, at the same time, also conducted to chamber (G) through orifice (b) of torque converter relief valve (3).
- As the oil pressure to the torque converter rises beyond the set pressure, the oil conducted to chamber (G) pushes piston (4) and the resulting reaction force pushes torque converter relief valve (3) rightward, opening ports (E) and (A).
  As the result, the oil in port (E) is drained through port (A).

Operation of main relief valve

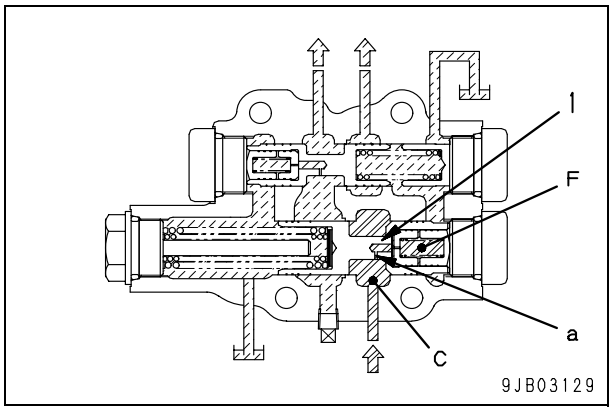

- The oil from the hydraulic pump flows to chamber (F) through the filter, port (C) of the relief valve and orifice (a) of main relief valve (1).

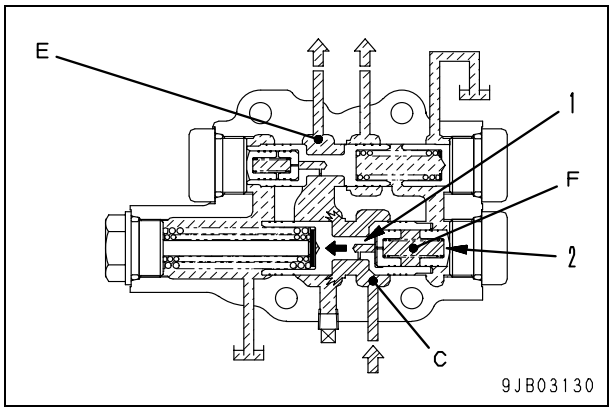

- As the oil pressure in the circuit goes beyond the set pressure, the oil conducted to chamber (F) pushes piston (2) and the resulting reaction force pushes spool (1) leftward, opening ports (C) and (E).
  Above operation conducts the oil from port (E) to the torque converter.

Lubrication relief valve

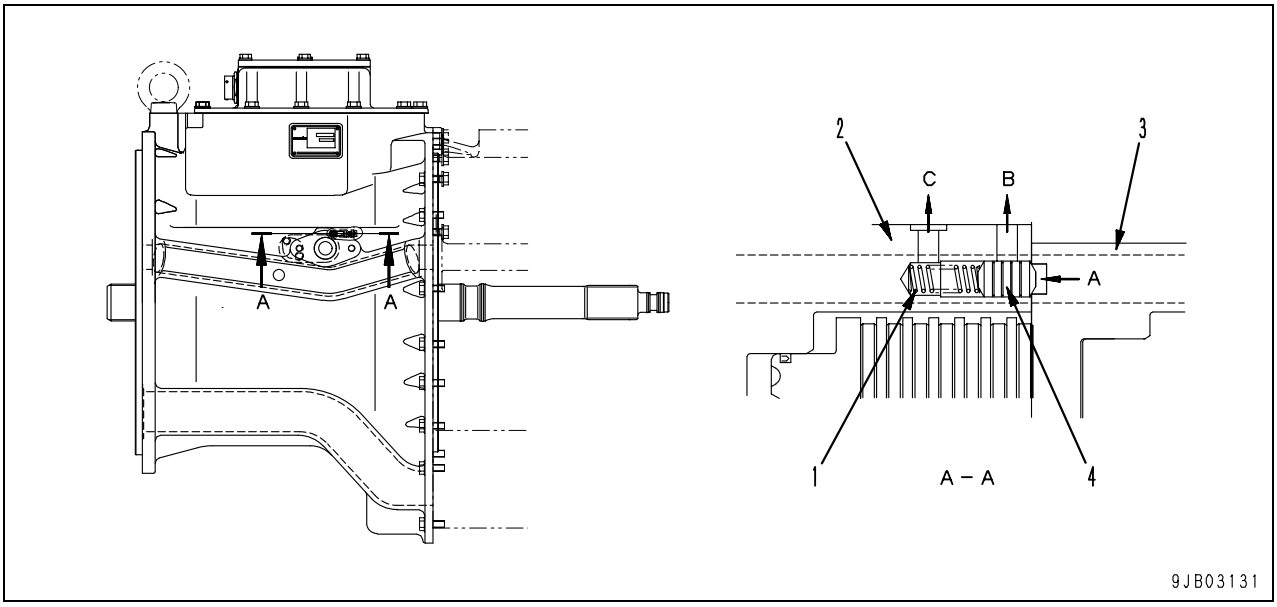

Unit: mm

No.	Check item	Criteria					Remedy
		Standard size			Repair limit		
1	Lubrication relief valve spring	Free length	Installation length	Installation load	Free length	Installation load	Replace
		26	23.6	12.5 N {1.27 kg}	25.2	11.9 N {1.21 kg}	

2. F clutch housing
3. R clutch housing
4. Piston

A: From oil cooler
B: Drain
C: Drain

Outline

- The oil leaving the torque converter passes through the power train oil cooler built in the radiator lower tank. It then goes through the lubrication relief valve and lubricates the transmission and PTO.
- The lubrication relief valve is installed to the right side face of the F clutch housing. It keeps the lubricating oil pressure below the set pressure.

	Specified value
Normal pressure (MPa{kg/cm^2})	0.14 ± 0.05 {1.4 ± 0.5}
Cracking pressure (MPa{kg/cm^2})	0.30 ± 0.03 {3.0 ± 0.3}

Scavenging pump

Type: SAR(4)140

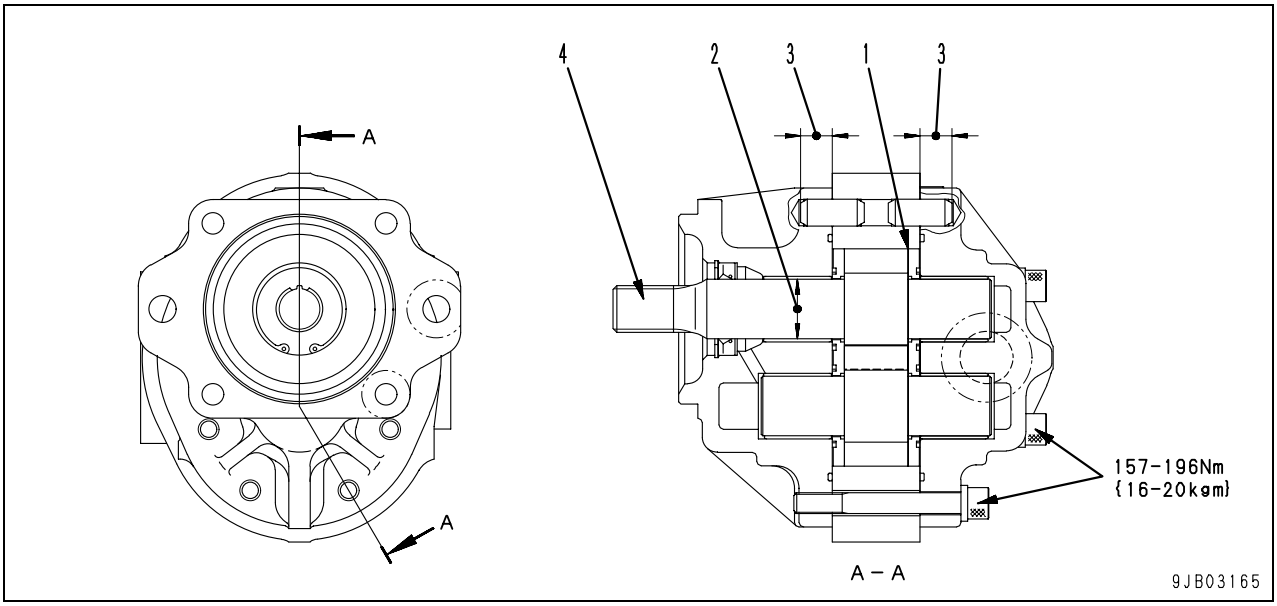

Unit: mm

No.	Check item	Criteria				Remedy
1	Side clearance	Standard clearance		Clearance limit		Replace
		0.11 – 0.16		0.19		
2	Clearance between plain bearing inner diameter and gear shaft outer diameter	0.06 – 0.14		0.20		
3	Pin driving depth	Standard size	Tolerance	Repair limit		
		21	0 -0.5	—		
4	Spline shaft rotating torque	9.8 – 14.7 Nm {1.0 – 1.5 kgm}				—
–	Delivery amount Oil: SAE10WCD Oil temperature: 45 – 55°C	Rotation speed (rpm)	Delivery pressure MPa{kg/cm^2}	Standard delivery (ℓ/min)	Delivery limit (ℓ/min)	
		2,200	2.94{30}	300	266	

Outline

- The scavenging pump is installed to the torque converter case and is driven with the power from the engine. It returns the oil collected in the bottom of the transmission case to the steering case.

Power train and steering lubrication pump

Type: SAR(3)100+(3)40

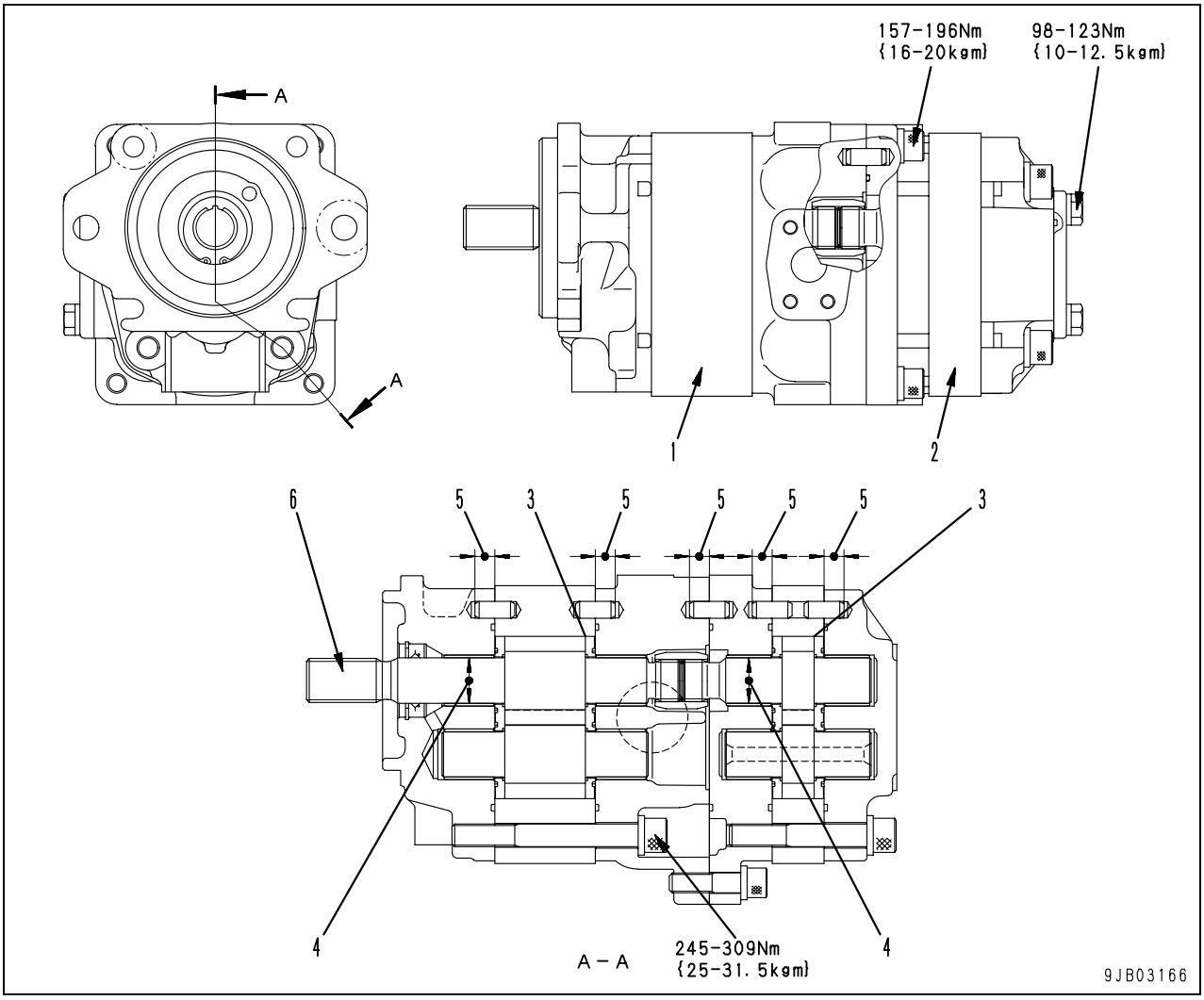

1. Power train pump
2. Steering lubrication pump

Outline

- The power train pump and the steering lubrication pump are installed to the torque converter case. They are driven by the power from the engine to supply the oil pressure to the torque converter, the transmission and the steering unit.

Unit: mm

<table>
<tr><th>No.</th><th>Check item</th><th colspan="6">Criteria</th><th>Remedy</th></tr>
<tr><td rowspan="3">3</td><td rowspan="3">Side clearance</td><td>Type</td><td colspan="2">Standard clearance</td><td colspan="2">Clearance limit</td><td rowspan="6">Replace</td></tr>
<tr><td>SAR(3)100</td><td colspan="2" rowspan="2">0.10 - 0.15</td><td colspan="2" rowspan="2">0.19</td></tr>
<tr><td>SAR(3)40</td></tr>
<tr><td rowspan="2">4</td><td rowspan="2">Clearance between plain bearing inner diameter and gear shaft outer diameter</td><td>SAR(3)100</td><td colspan="2" rowspan="2">0.06 - 0.15</td><td colspan="2" rowspan="2">0.20</td></tr>
<tr><td>SAR(3)40</td></tr>
<tr><td rowspan="3">5</td><td rowspan="3">Pin driving depth</td><td>Type</td><td>Standard size</td><td colspan="2">Tolerance</td><td>Repair limit</td></tr>
<tr><td>SAR(3)100</td><td rowspan="2">14</td><td colspan="2" rowspan="2">0
-0.5</td><td rowspan="2">—</td></tr>
<tr><td>SAR(3)40</td></tr>
<tr><td>6</td><td>Rotating torque of spline shaft</td><td colspan="6">13.7 - 23.5 Nm {1.4 - 2.4 kgm}</td><td rowspan="4">—</td></tr>
<tr><td rowspan="3">–</td><td rowspan="3">Delivery amount
Oil: SAE10WCD
Oil temperature: 45 – 55°C</td><td>Type</td><td>Rotation speed (rpm)</td><td>Delivery pressure (MPa{kg/cm^2})</td><td>Standard delivery (ℓ/min)</td><td>Delivery limit (ℓ/min)</td></tr>
<tr><td>SAR(3)100</td><td>2,500</td><td>2.94{30}</td><td>241</td><td>96</td></tr>
<tr><td>SAR(3)40</td><td>2,500</td><td>2.94{30}</td><td>239</td><td>85</td></tr>
</table>

D155AX-6 Bulldozer

Form No. SEN00604-00

© 2005 KOMATSU
All Rights Reserved
Printed in Japan 12-05 (02)

BULLDOZER

D155AX-6

Machine model	Serial number
D155AX-6	80001 and up

10 Structure, function and maintenance standard

Power train system, Part 2

Power train system, Part 2 2
HSS system 2
HSS motor 4
Hydraulic, HSS pump 14
Hydraulic oil cooler bypass valve 37
Steering, brake control 38
Steering unit 40
Brake control valve 56
Brake ECMV 58
Parking brake solenoid valve 63
Sudden stop prevention valve 65
Final drive 67
Sprocket 71

Power train system, Part 2

HSS system

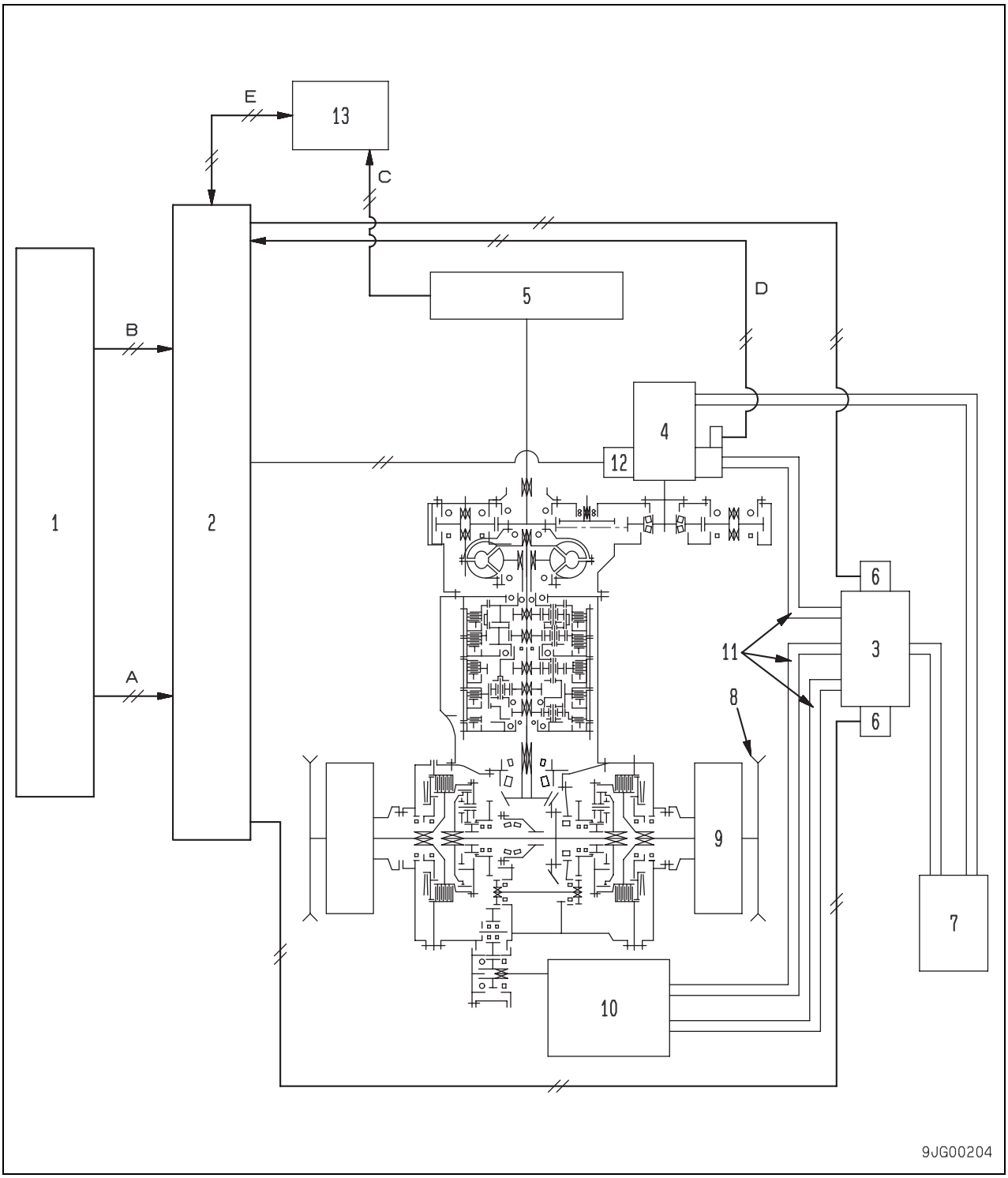

1. PCCS lever
2. Power train controller
3. Control valve
4. Hydraulic, HSS pump
5. Engine
6. EPC valve
7. Hydraulic tank
8. Sprocket
9. Final drive
10. HSS motor
11. HSS open circuit
12. Servo valve
13. Engine throttle controller

A: FORWORD REVERSE signal
B: STEERING signal
C: Engine control information
D: Work equipment pressure signal
E: CAN communication network

Outline

- HSS system is an abbreviation for the Hydrostatic Steering System.
- The HSS system consists of a set of control valve, hydraulic, HSS pump, and HSS motor as shown in the figure. It turns the machine continuously without lowering the travel speed by making a difference in speed between both tracks.
- The power train controller controls the EPC valve of the control valve to control the revolving direction and revolving speed of the HSS motor according to the tilting direction and angle of the PCCS lever. The HSS motor acts on the planetary gear mechanism of the bevel gear shaft to make a difference in speed between both sprockets. As a result, the machine turns.
- The power train controller senses the engine speed and oil pressure at each part and controls the hydraulic, HSS pump and control valve to drive the hydraulic, HSS pump so that the engine will not stall.
- The engine speed signal and other engine control information items are sent and received through the CAN communication network which connects the engine throttle controller and power train controller.

HSS motor

Type: HMF140

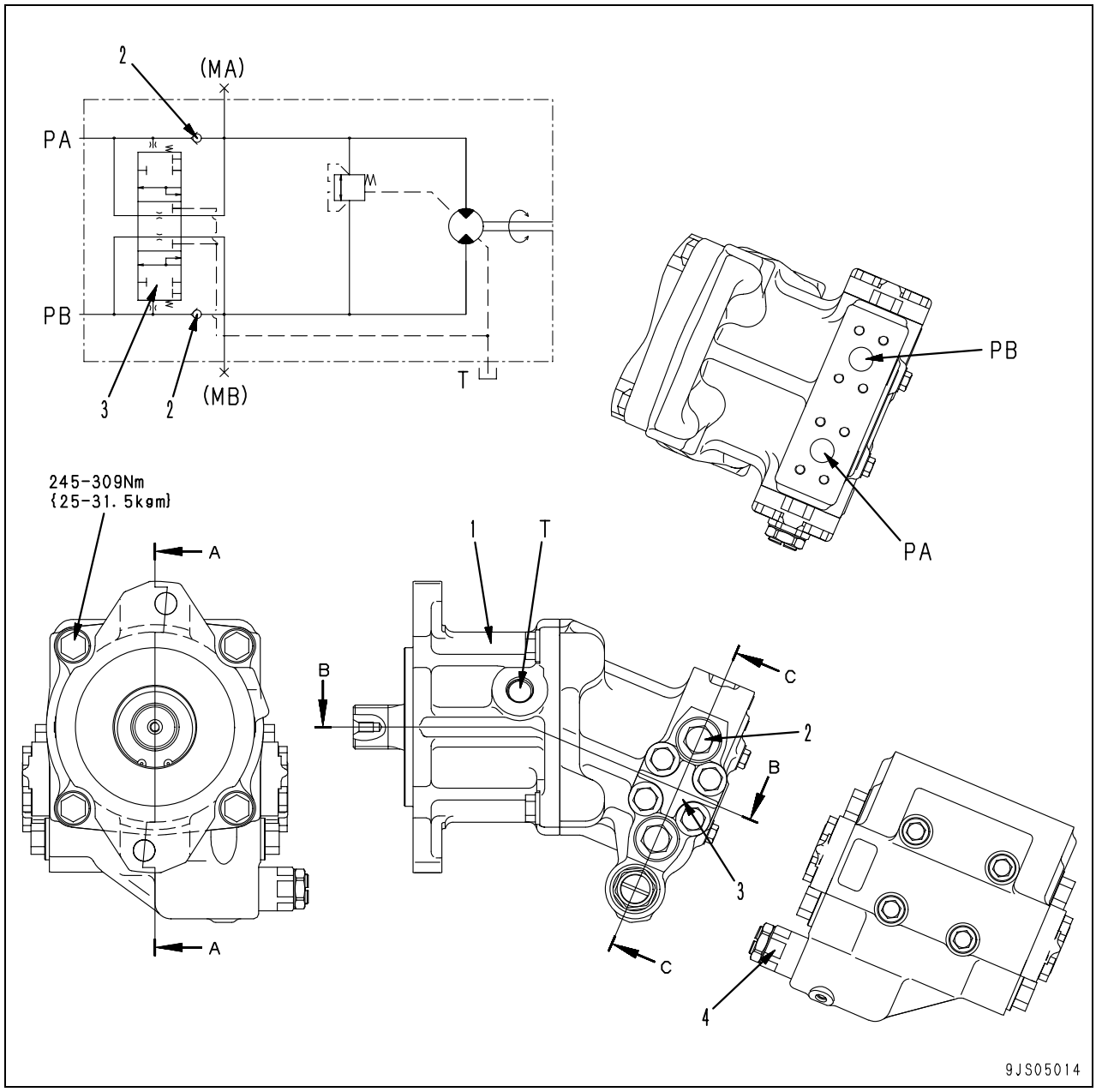

PA: From control valve
PB: From control valve
T: To tank

1. HSS motor
2. Check valve
3. Counterbalance valve
4. Relief valve

Outline

- This motor is composed of the fixed capacity bent axis type piston motor, the counterbalance valve, the check valve and relief valve.

Specifications

Type: KMF140
Theoretical delivery: 141.1 cm^3/rev
Rated output pressure: 41.2 MPa {420 kg/cm^2}
Rated rpm: 2,205 rpm

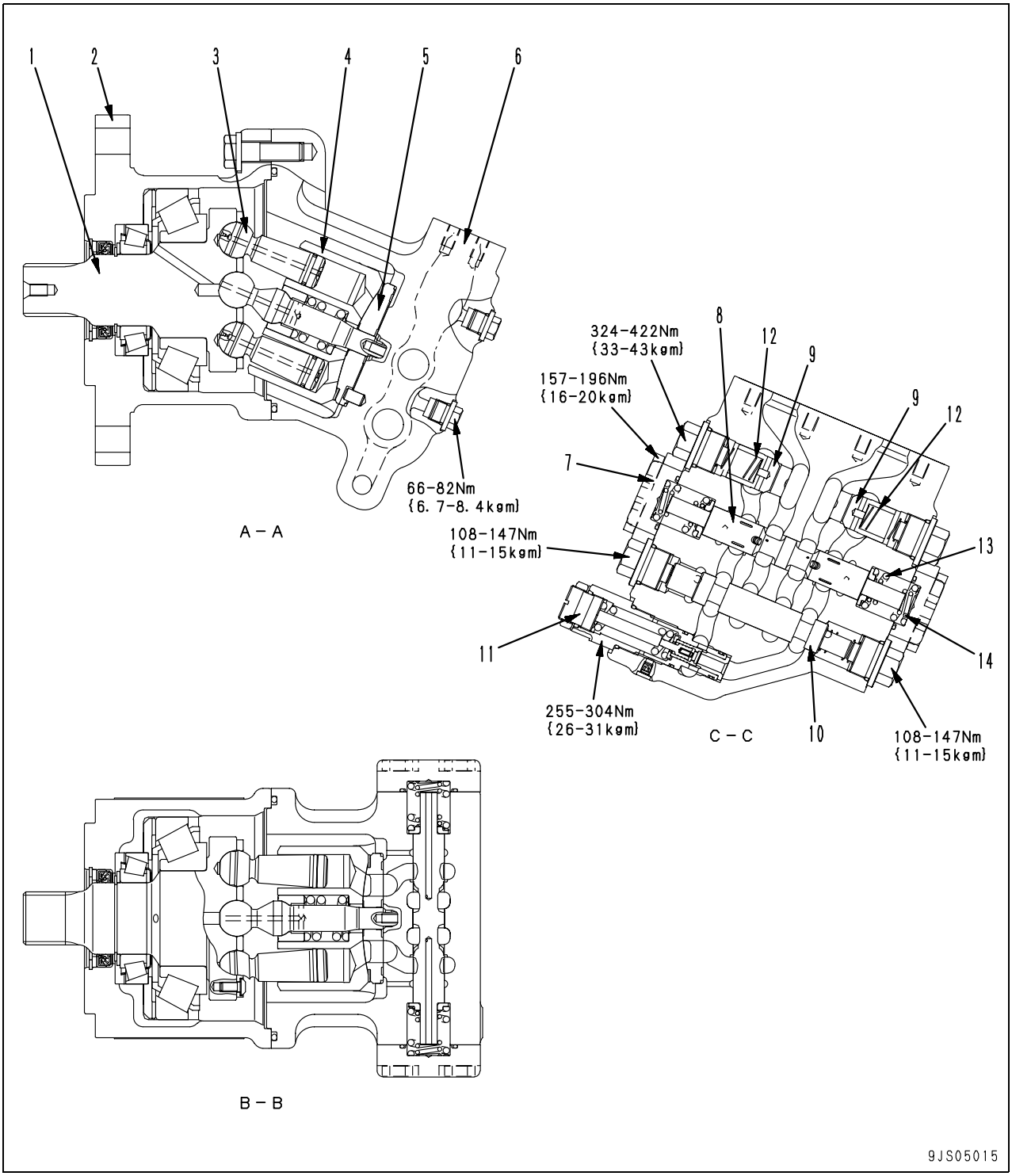
1
2
3
4
5
6
66-82Nm
{6.7-8.4kgm}
A – A
8
12
9
324-422Nm
{33-43kgm}
157-196Nm
{16-20kgm}
9
12
7
108-147Nm
{11-15kgm}
13
11
14
255-304Nm
{26-31kgm}
C – C
10
108-147Nm
{11-15kgm}
B – B
9JS05015

1. Drive shaft
2. Motor case
3. Piston
4. Cylinder block
5. Valve plate
6. Housing
7. Cover
8. Counterbalance valve spool
9. Check valve
10. Spool
11. Safety valve

Unit: mm

No.	Check item	Criteria					Remedy
		Standard size			Repair limit		
		Free length x outer diameter	Installation length	Installation load	Free length	Installation load	
12	Check valve spring	62.5 x 20	39	3.04 N {0.31 kg}	—	1.96 N {0.25 kg}	Replace spring if damaged or deformed.
13	Spool return spring (Large)	43.4 x 35	41	241 N {24.6 kg}	—	155 N {19.7 kg}	
14	Spool return spring (Small)	40.44 x 21.9	38	96.1 N {9.8 kg}	—	76.9 N {7.84 kg}	

Operation of piston motor

Principle

- Supposed that the axis of the disc is supported and the disc can rotate freely.If force (F) is applied to the disc diagonally, force (F) is divided into vertical force to the disc (F1) and circumferential force (F2). (F1) pushes the disc to axis direction, and (F2) rotates the disc clockwise.
- Instead, if force (F'), not force (F) is applied to the disc, the force is also divided into (F1') and (F2'), and the disc rotates counterclockwise by force (F2').

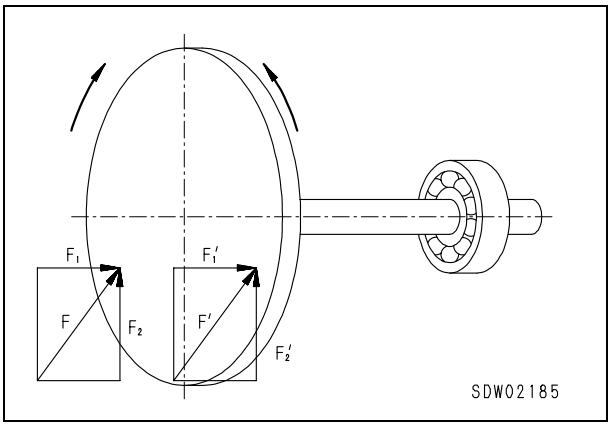

Structure

- Seven pistons (3) are attached to the disc part of drive shaft (1) with a manner just like a spherical joint Pistons (3) forms an specific agle with drive shaft (1), and stored in cylinder block (4).

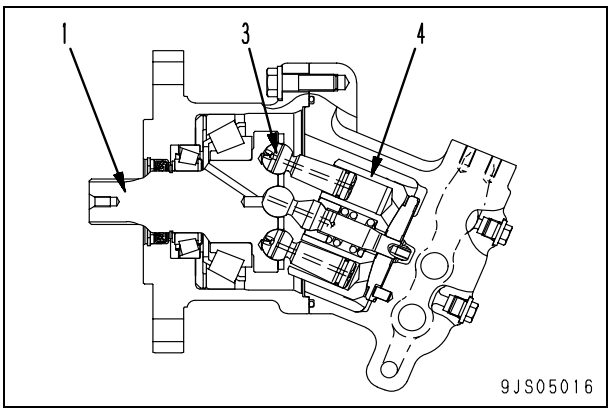

Operation

- The pressurized oil sent from the main piston pump enters from the piston motor inlet port, and the oil pressure is applied to the back of piston (3), and drive shaft (1) rotates by the inclination (Q) of piston (3) and cylinder block (4).

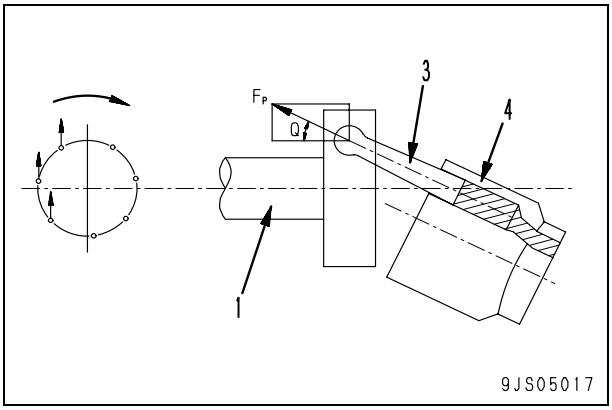

Brake valve

- The brake valve consists of check valve (9), counterbalance valve (8), and safety valve (11).
- Functions and operations of respective components shall conform to the following.

1) Counterbalance valve and check valve

Function

- When the steering is operated on a downhill slope, the gravity force tends to make the current driving speed faster than the speed by motor (engine) rotation.
- If the steering is operated while the engine is running at low speed, the motor rotates under no load and runs away. This may cause an extremely dangerous condition.
- These valves control the steering opration in accordance with the engine speed (pump delivery) in order to prevent such a dangerous condition.

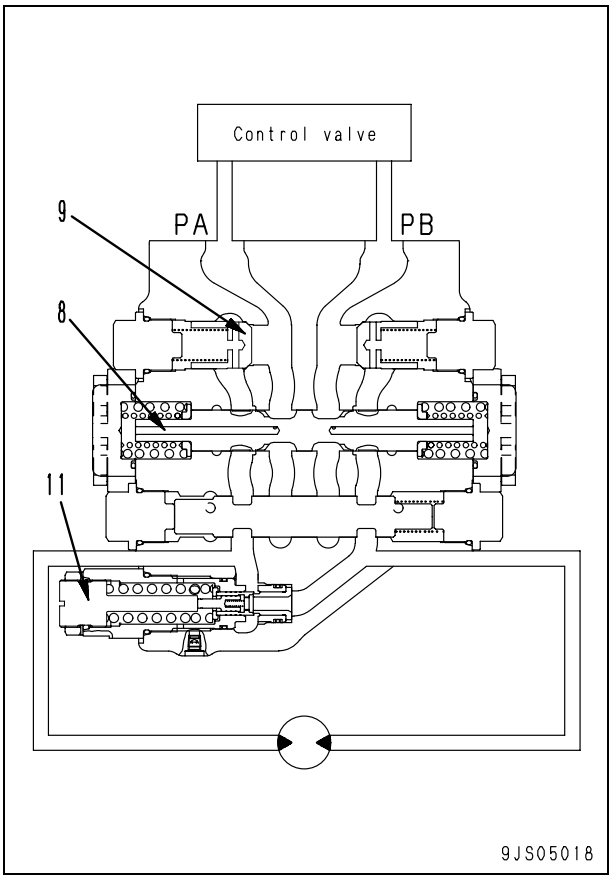

Operation when pressurized oil is supplied

- If steering lever is operated, the pressurized oil from the control valve is supplied to port (PA).
- It pushes open check valve (9A), and flows from motor inlet port (MA) to motor outlet port (MB).
- The outlet port side of the motor is closed by check valve (9B) and spool (8), so the pressure at the side where the oil is being supplied rises.

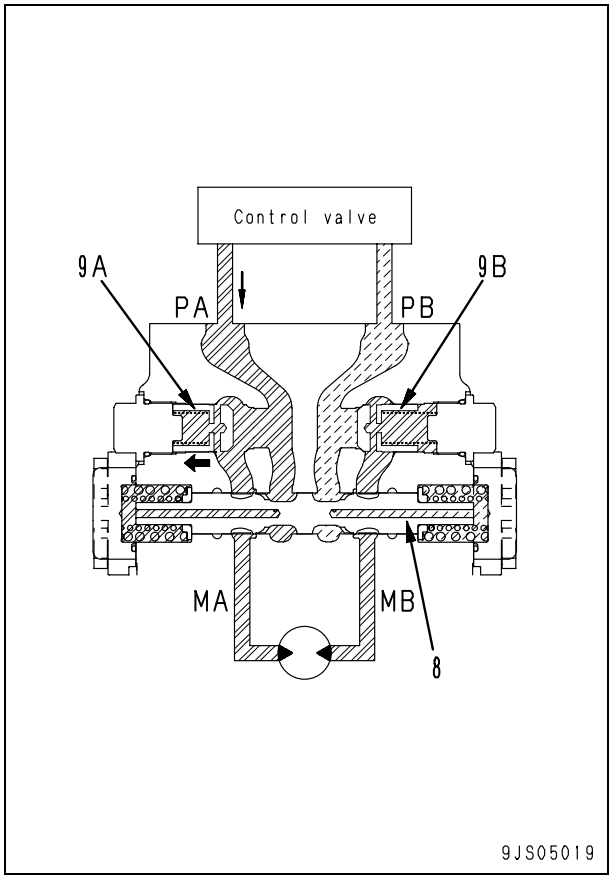

- The pressurized oil at the side where the oil is being supplied flows from orifice (E1) of spool (8) into chamber (S1).
- When the pressure in chamber (S1) becomes higher than the spool switching pressure, spool (8) is pushed to the right.
- Port (MB) and port (PB) are connected, opening the motor outlet port side and starting the motor rotating.

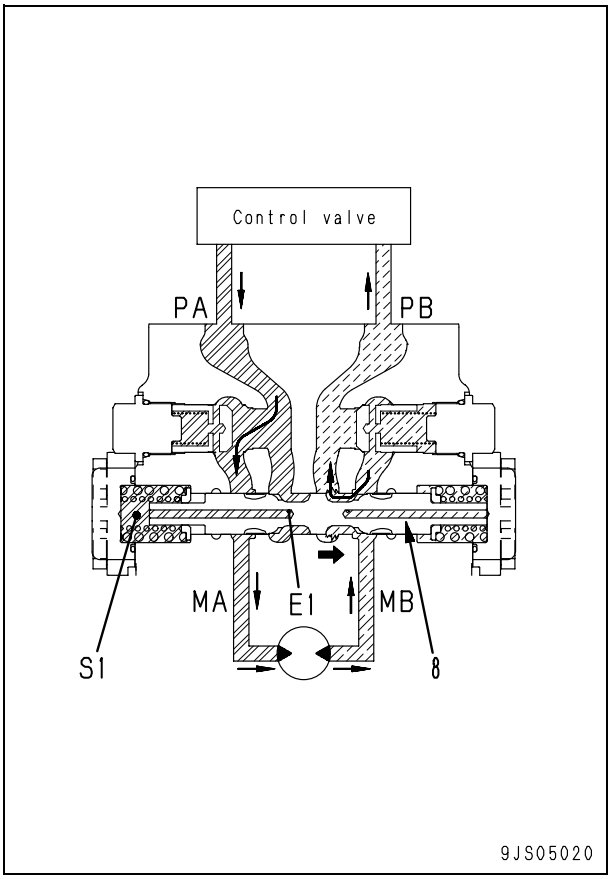

Brake operation when traveling downhill

- When steering is operated on a downhill slopes, if the machine attempts to run away, the motor will rotate under no load, and the oil pressure at the inlet port of motor will drop.
- Through orifice (E1), the pressure in chamber (S1) drops.
- If the pressure in chamber (S1) drops below the spool switching pressure, spool (8) is pushed to the left by spring (13), (14), and outlet port (MB) is throttled.
- The pressure at the outlet port side rises, generating rotation resistance on the motor to prevents the machine from running away.
- Spool (8) moves to a position where it balances the pressure at outlet port (MB) with the force resulting from the weight of the machine and the pressure at the inlet port.
- In this way, it throttles the outlet port circuit and possible to steer to a speed that matches the amount of oil discharged from the pump.

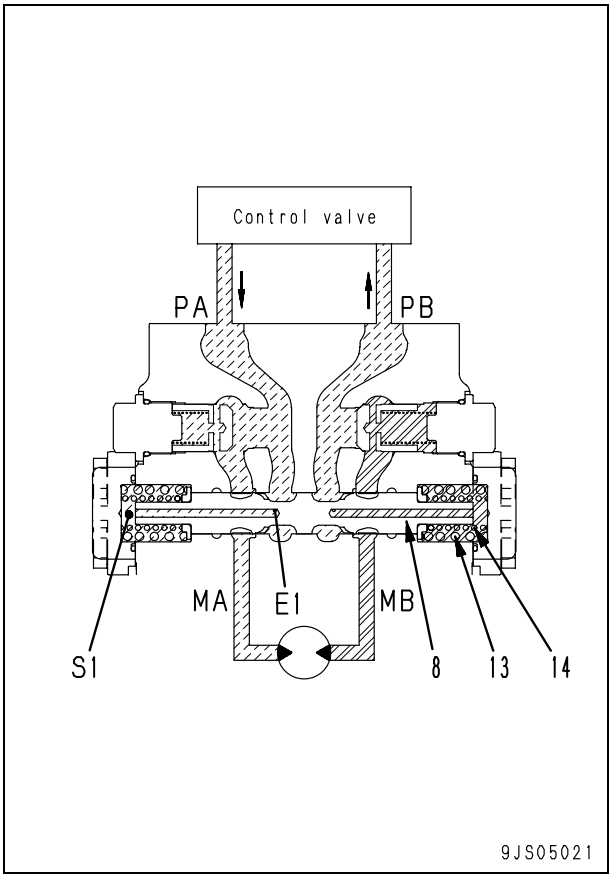

2) Safety valve
(Both operated safety valve.)

Function

- When the operation of the steering is finished, counterbalance valve closes the circuit at the inlet and outlet ports of the motor.
- Since the motor is rotated by inertial force, pressure in the motor outlet port side is abnormally increased, potentially resulting in damages on the motor and piping.
- The safety valve releases this abnormal pressure to the inlet port side of the motor in order to prevent damages to the equipment.

Bidirectional action

(1) When pressure in chamber (MB) has become high (when rotating clockwise)

- When the operation of the steering is finished, the check valve of the counterbalance valve closes the circuit at outlet ports (MB).
- The motor tries to continue rotation resorting to inertial force, thus pressure on the outlet port (MB) is increased.

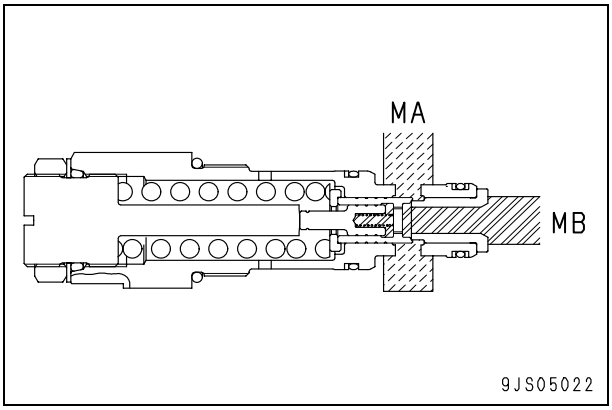

- As the pressure goes above the set pressure, [Difference in areas of circles (D1) and (D2) x Pressure] compresses spring (2).
- Poppet (1) is moved leftward and the pressurized oil flows into chamber (MA) of the opposite circuit.

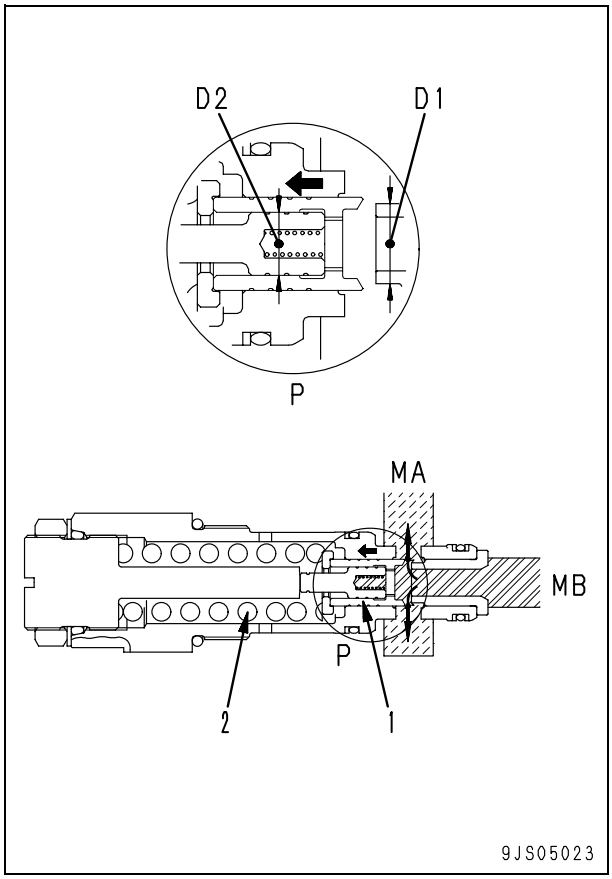

(2) When pressure in chamber (MA) has become high (when rotating counterclockwise)

- When the operation of the steering is finished, the check valve of the counterbalance valve closes the circuit at outlet ports (MA) of the motor.
- The motor tries to continue rotation resorting to inertial force, thus pressure on the outlet port (MA) is increased.

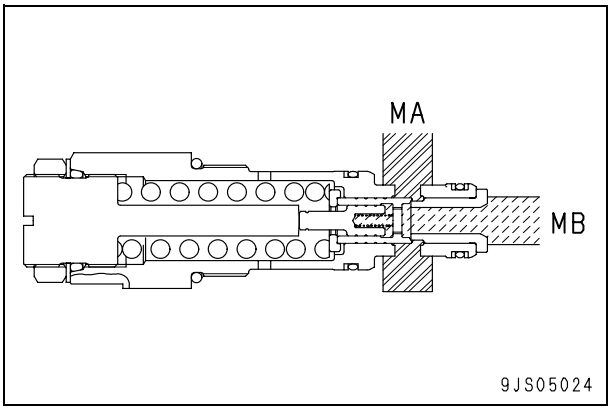

- As the pressure goes above the set pressure, [Difference in areas of circles (D1) and (D3) x Pressure] compresses spring (2).
- Poppet (1) is moved leftward and the pressurized oil flows into chamber (MB) of the opposite circuit.

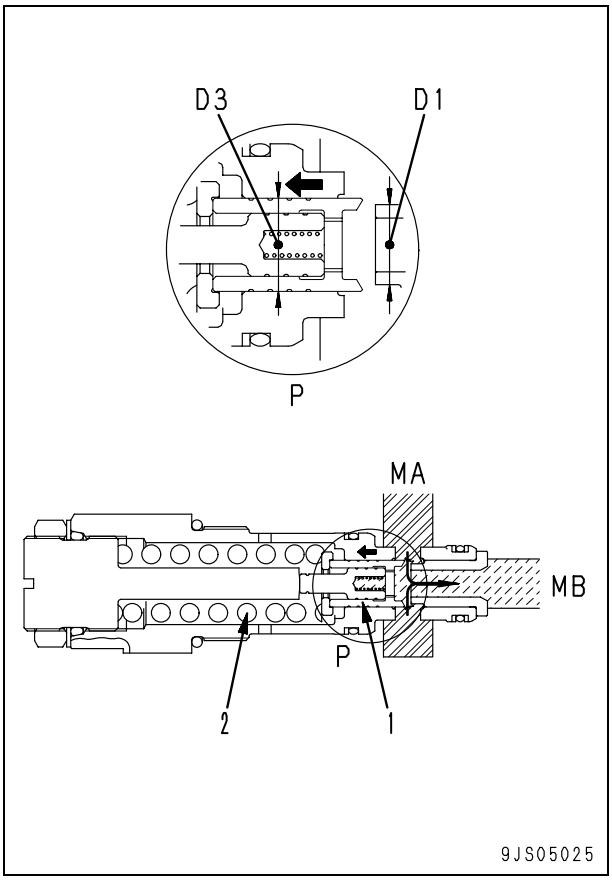

Hydraulic, HSS pump

Type: HPV160

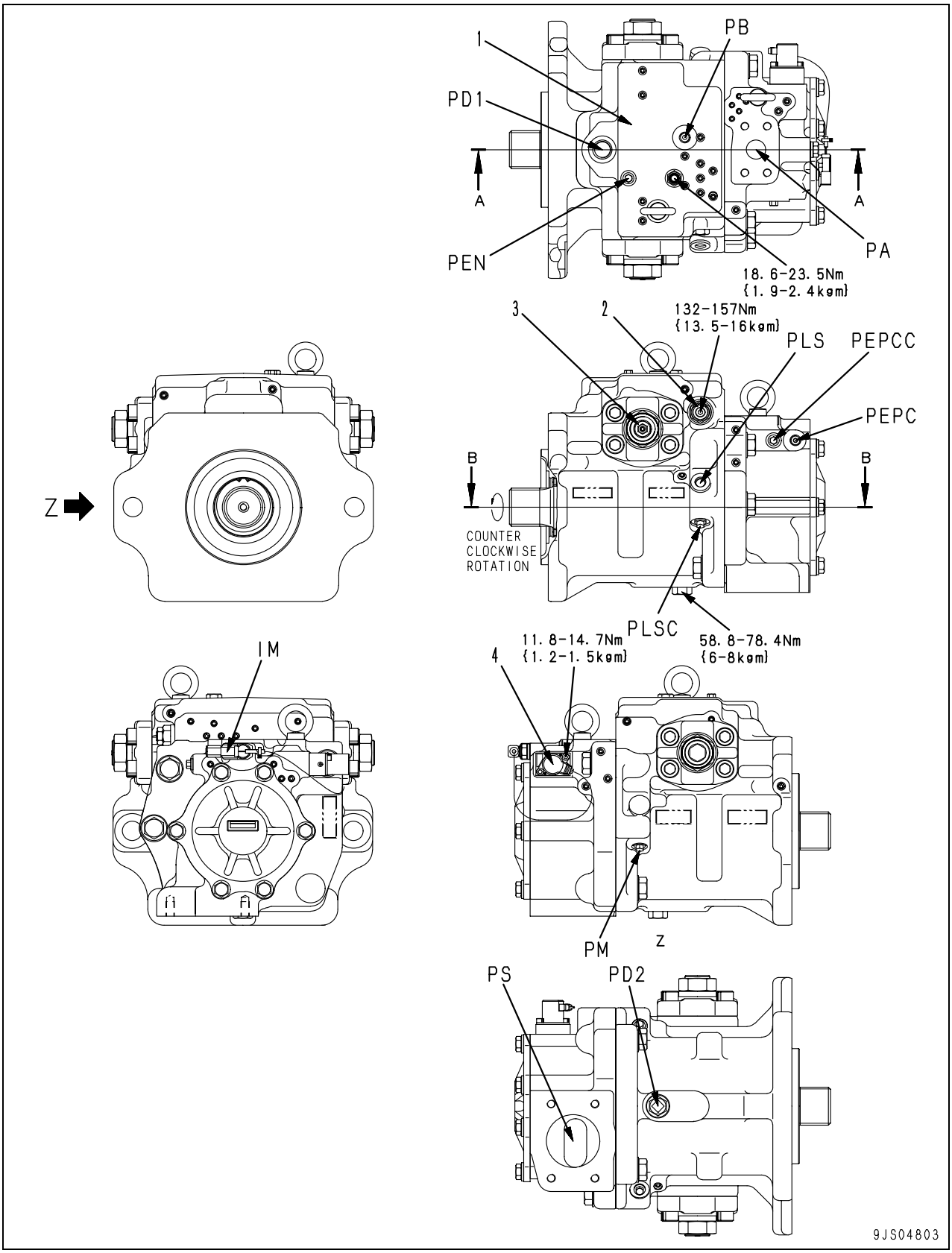

Outline

- This pump consists of a variable displacement swash plate type piston pump, PC valve, and EPC valve.

IM: PC mode selector current
PA: Pump discharge port
PB: Pump discharge pressure input port
PD1: Case drain port
PD2: Drain plug
PEN: Control pressure pickup port
PEPC: EPC basic pressure port
PEPCC: EPC basic pressure pickup port
PLS: Load pressure input port
PLSC: Load pressure pickup port
PM: PC mode selector pressure pickup port
PS: Pump suction port

1. Front pump
2. LS valve
3. PC valve
4. PC-EPC valve

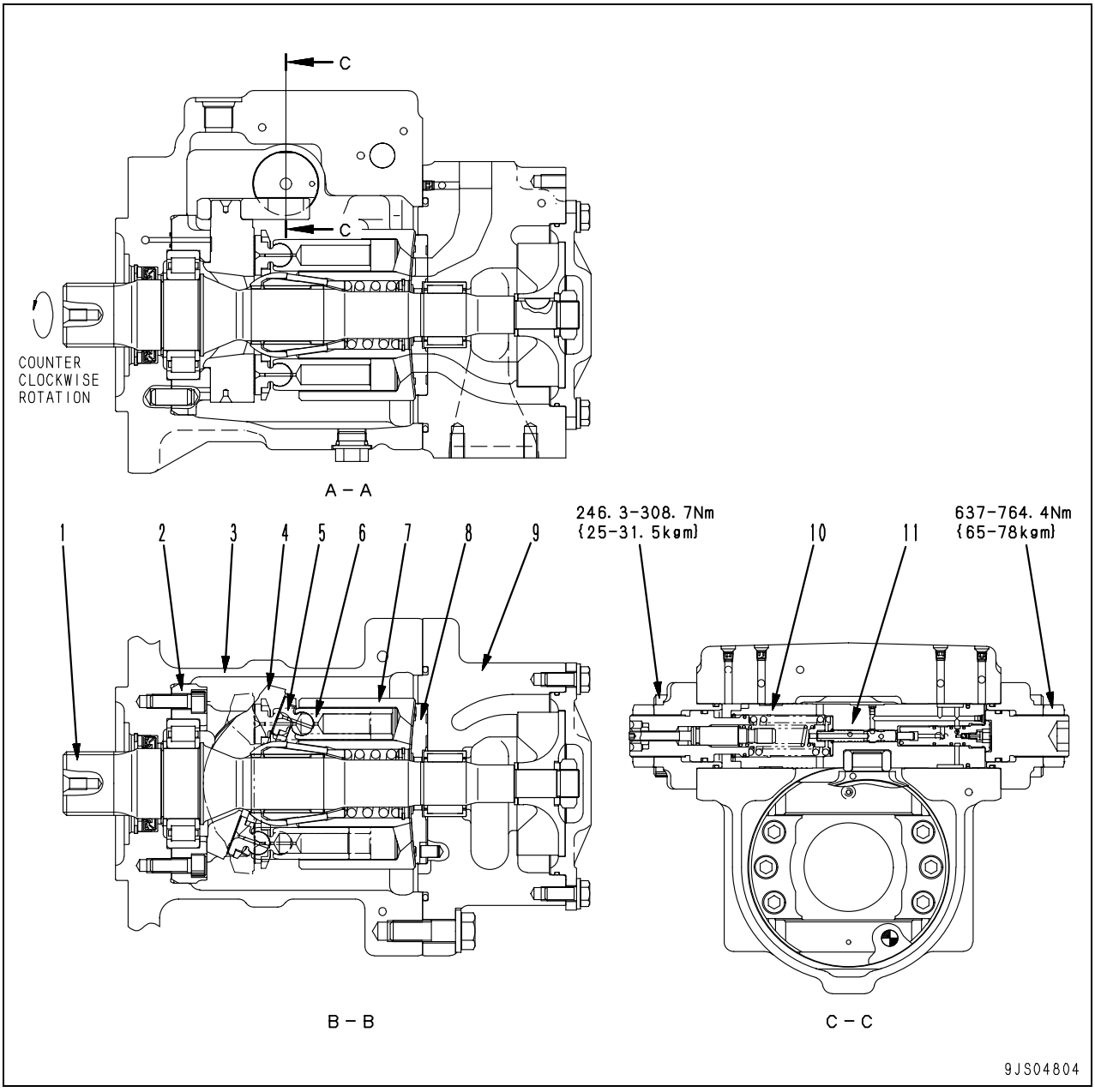

1. Shaft
2. Cradle
3. Case
4. Rocker cam
5. Shoe
6. Piston
7 Cylinder block
8. Valve plate
9. End cap
10. Servo piston
11. PC valve

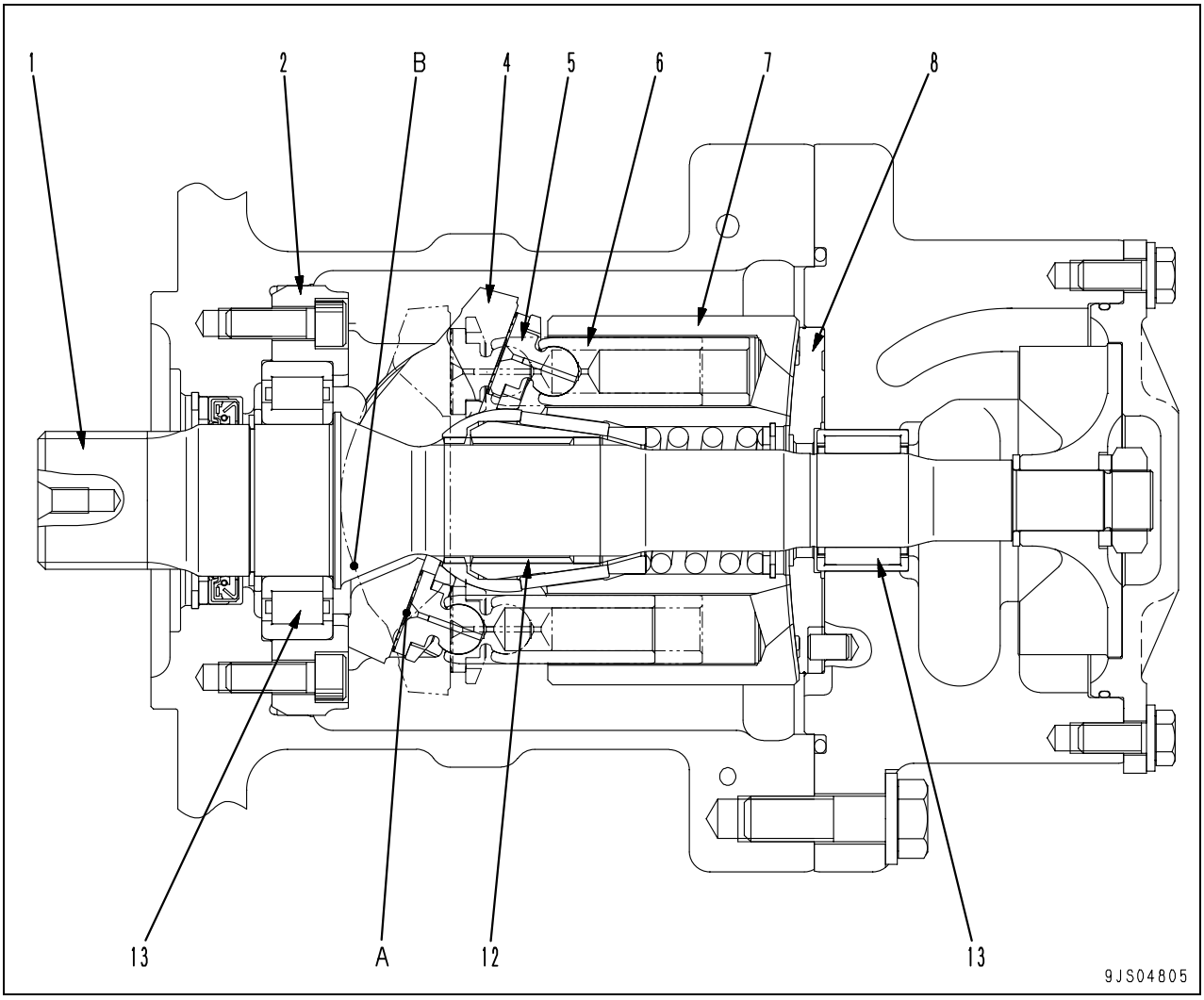

Function

- The pump converts the engine rotation transmitted to its shaft to oil pressure and delivers pressurized oil corresponding to the load.
- It is possible to change the delivery by changing the swash plate angle.

Structure

- Cylinder block (7) is supported to shaft (1) by spline (12).
- Shaft (1) is supported by each bearing (13).
- The end of piston (6) has a spherical hollow and is combined with shoe (5).
- Piston (6) and shoe (5) form a spherical bearing.
- Rocker cam (4) has flat surface (A), and shoe (5) is always pressed against this surface while sliding in a circular movement.
- Rocker cam (4) conducts high pressure oil to cylinder surface (B) with cradle (2), which is secured to the case, and forms a static pressure bearing when it slides.
- Piston (6) carries out relative movement in the axial direction inside each cylinder chamber of cylinder block (7).
- Cylinder block (7) seals the pressurized oil to valve plate (8) and carries out relative rotation.
- This surface is designed so that the oil pressure balance is maintained at a suitable level.
- The oil inside each cylinder chamber of cylinder block (7) is suctioned and discharged through valve plate (8).

Operation of pump

- Cylinder block (7) rotates together with shaft (1), and shoe (5) slides on flat surface (A).
- When this happens, rocker cam (4) moves along cylindrical surface (B), so angle (a) between center line (X) of rocker cam (4) and the axial direction of cylinder block (7) changes.
- Angle (a) is called the swash plate angle.

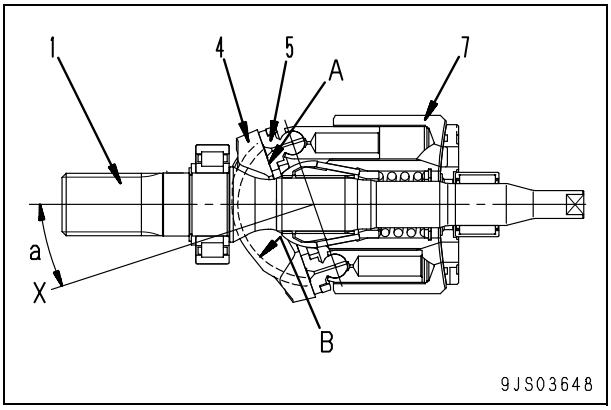

- With center line (X) of rocker cam (4) at swash plate angle (a) in relation to the axial direction of cylinder block (7), flat surface (A) acts as a cam in relation to shoe (5).
- In this way, piston (6) slides on the inside of cylinder block (7), so a difference between volumes (E) and (F) is created inside cylinder block (7).
- A single piston (6) sucks and discharges the oil by the amount (F) – (E).
- As cylinder block (7) rotates and the volume of chamber (E) becomes smaller, the pressurized oil is discharged.
- On the other hand, the volume of chamber (F) grows larger and, in this process, the oil is suctioned.

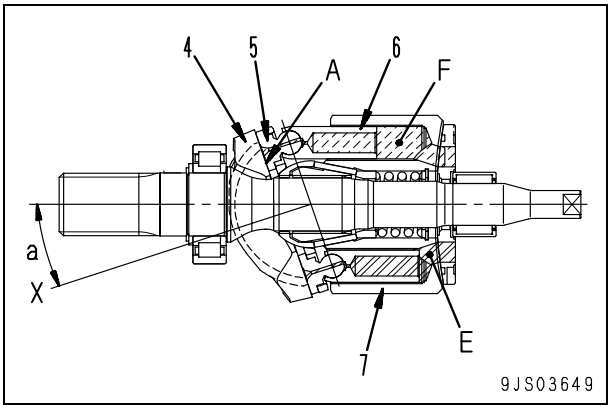

- As center line (X) of rocker cam (4) matches the axial direction of cylinder block (7) (swash plate angle (a) = 0), the difference between volumes (E) and (F) inside cylinder block (7) becomes 0.
- Suction and discharge of pressurized oil is not carried out in this state. Namely pumping action is not performed. (Actually, however, the swash plate angle is not set to 0)

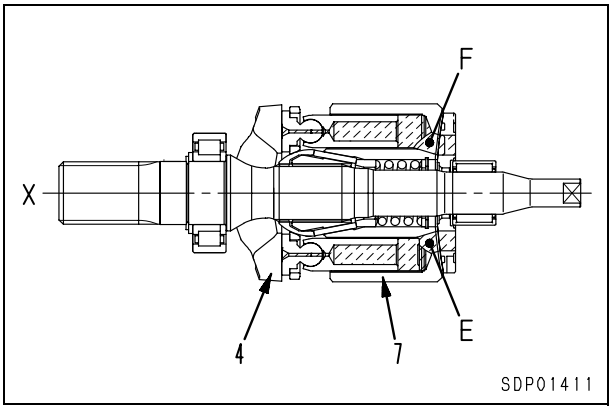

Control of delivery

- If the swash plate angle (a) becomes larger, the difference between volumes (E) and (F) becomes larger and pump delivery (Q) increases.
- Swash plate angle (a) is changed with servo piston (10).
- Servo piston (10) reciprocates straight according to the signal pressure of the PC and the LS valve.
- This straight line movement is transmitted to rocker cam (4) through slider (14).
- Being supported by cradle (2) on the cylindrical surface, rocker cam (4) slides on the surface while continuing revolving movement.
- The area receiving the pressure is different at the left and right sides of servo piston (10), and the receiving pressure at the small diameter piston end is always connected with the main pump discharge pressure (self pressure) (PP).
- Output pressure (PEN) of the LS valve is brought to the chamber receiving the pressure at the large diameter piston end.
- The movement of servo piston (10) is controlled by the relationship of the size of the pressure (PP) at the small diameter piston end and the pressure (PEN) at the large diameter piston end , and the comparative size of the ratio of the area receiving the pressure at the small diameter piston end and large diameter piston end.

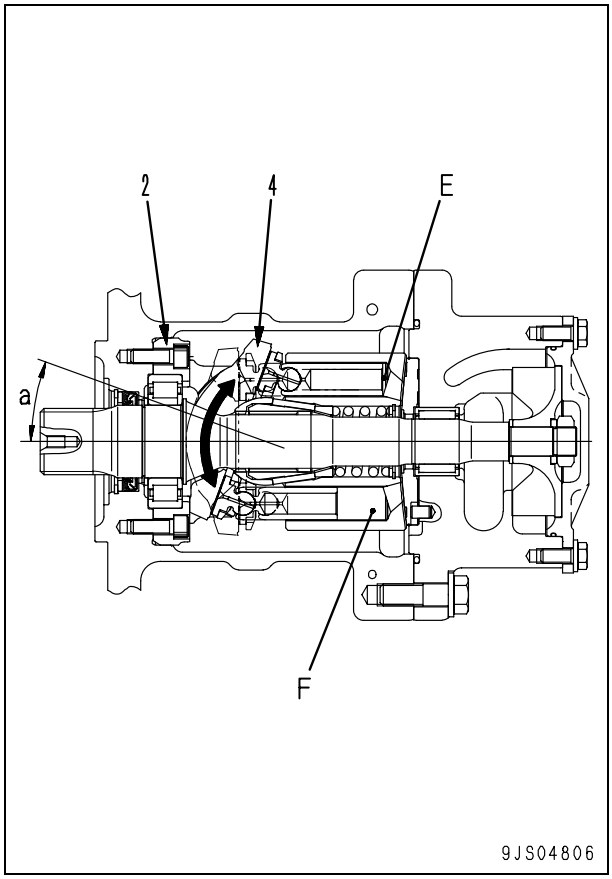

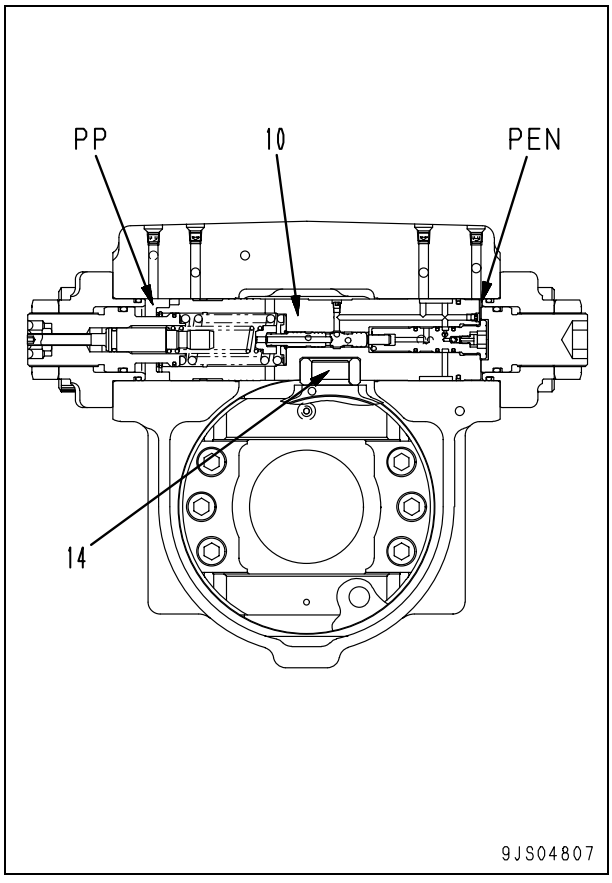

1. LS valve

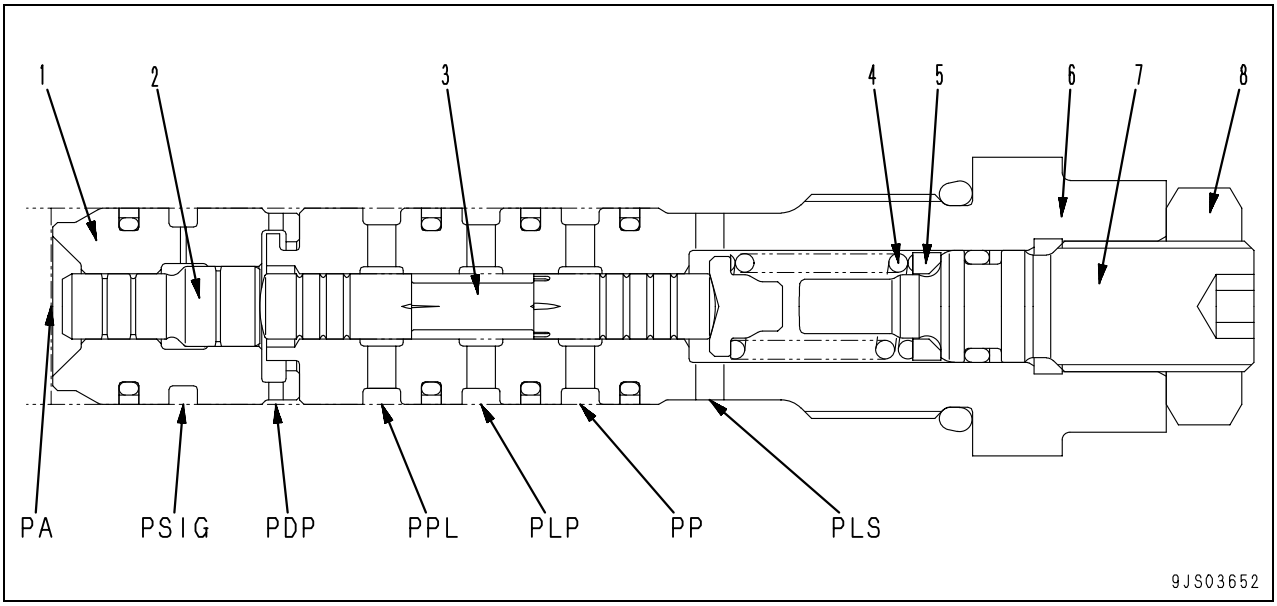

PA: Pump port
PDP: Drain port
PLP: LS control pressure output port
PLS: LS pressure input port
PP: Pump port
PPL: Control pressure input port
PSIG: Drain port

1. Sleeve
2. Piston
3. Spool
4. Spring
5. Seat
6. Sleeve
7. Plug
8. Locknut

Function

- The LS (load sensing) valve detects the load and controls the delivery.
- This valve controls pump delivery (Q) according to differential pressure (ΔPLS) [= (PP – PLS)] (called LS differential pressure) between pump discharge pressure (PP) and control valve outlet port pressure (PLS).
- Pump discharge pressure (PP), pressure (PLS) [called LS pressure] coming from the control valve output enter this valve.
- The relationship between the differential pressure (ΔPLS) [= (PP) – (PLS)], the difference between pump discharge pressure (PP) and LS pressure (PLS), and delivery (Q) is as shown in the diagram.

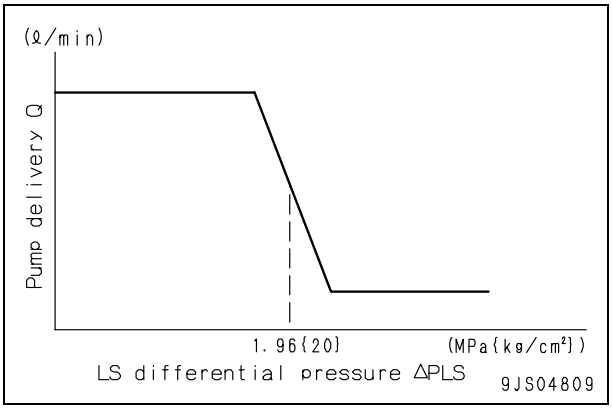

Operation

1) When the control valve is situated at neutral

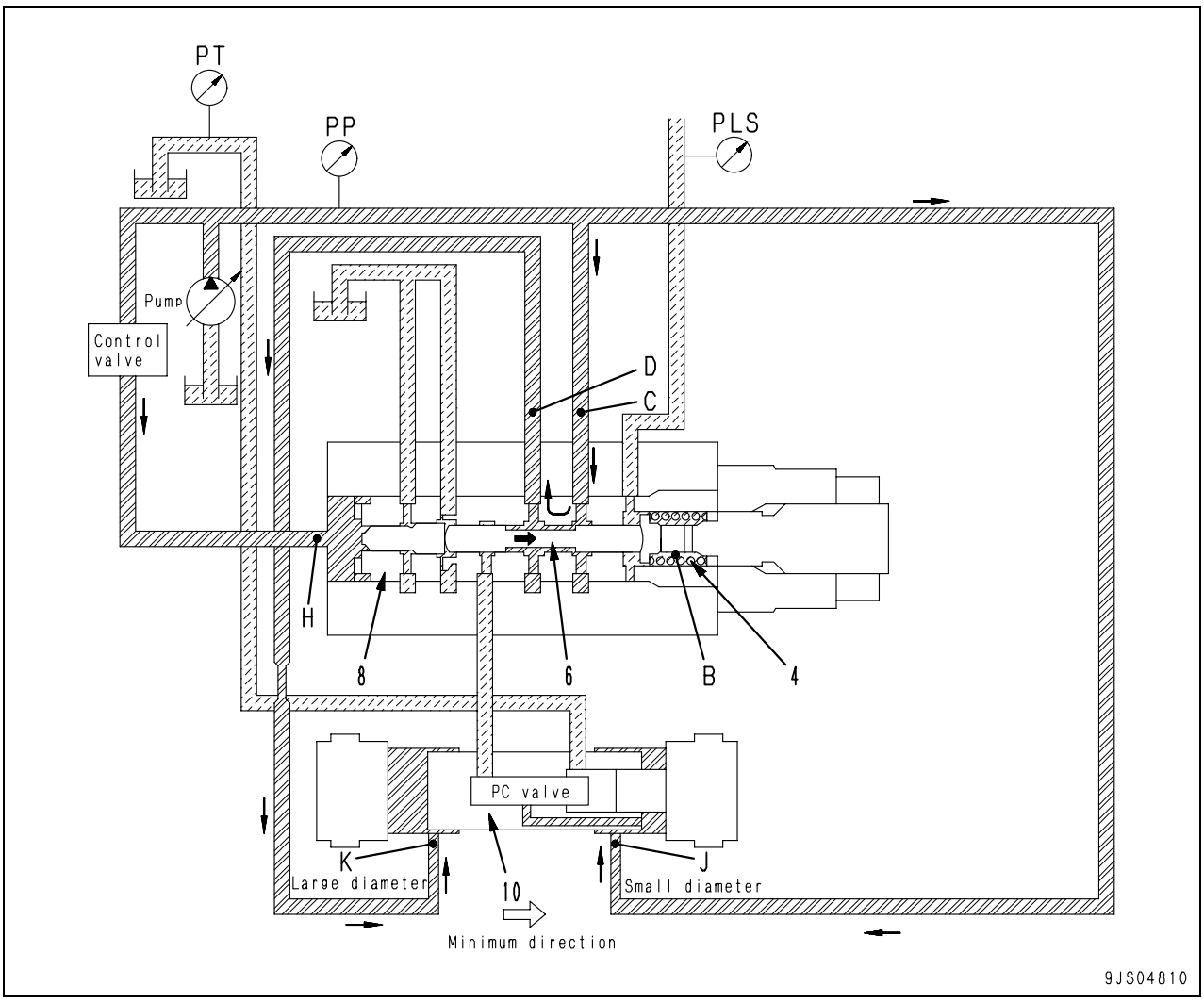

- The LS valve is a three-way selector valve, with pressure (PLS) (LS pressure) from the inlet port of the control valve brought to spring chamber (B), and pump discharge pressure (PP) brought to port (H) of sleeve (8).
- Magnitude of the force resulting from this LS pressure (PLS), force of spring (4) and the pump delivery pressure (self pressure) (PP) determine the position of spool (6).
- Before the engine is started, servo piston (10) is pushed to the right.(See right drawing)
- If the control lever is at the neutral position when the engine is started, LS pressure (PLS) will be set to 0 MPa {0 kg/cm^2}. (It is interconnected to the drain circuit through the control valve spool)
- Spool (6) is pushed to the right, and port (C) and port (D) will be connected.
- Pump discharge pressure (PP) enters the large diameter end of piston from port (K).
- The same pump discharge pressure (PP) enters the small diameter end of piston port (J).
- Because of the difference in area of servo piston (10), it moves in the direction to make the swash plate angle smaller.

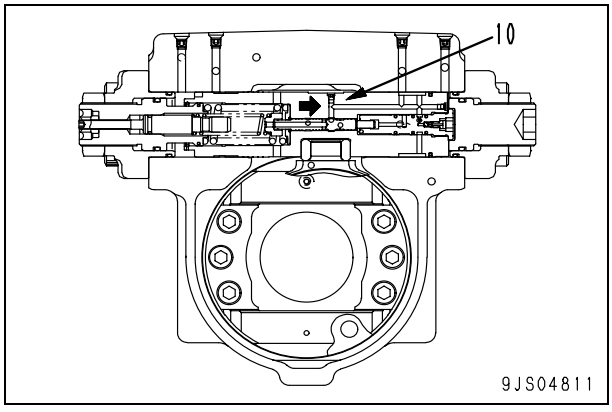

2) Action for the direction of maximizing the pump delivery

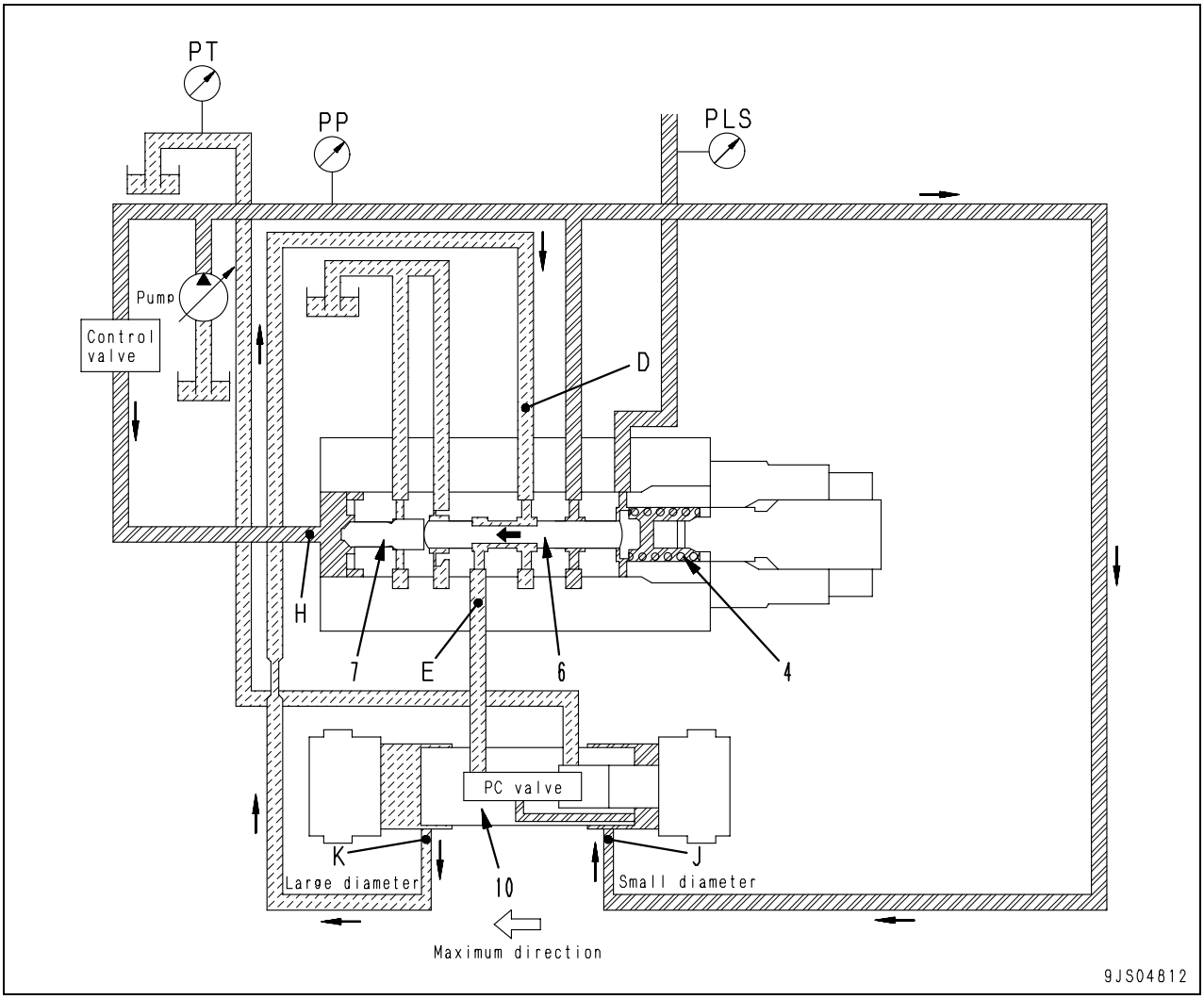

- When the difference between pump discharge pressure (PP) and LS pressure (PLS), in other words, LS differential pressure (ΔPLS) becomes smaller [for example, when the area of opening of the control valve becomes larger and pump discharge pressure (PP) drops], spool (6) is pushed to the left by the combined force of LS pressure (PLS) and the force of spring (4).
- When spool (6) moves, port (D) and port (E) are interconnected and connected to the PC valve.
- The PC valve is connected to the drain port, so the pressure across circuits (D) and (K) becomes drain pressure (PT). (The operation of the PC valve is explained later.)
- The pressure at the large piston diameter end of servo piston (10) becomes drain pressure (PT), and pump discharge pressure (PP) always enters the small diameter end port (J), so servo piston (10) is pushed to the left, and moves the swash plate in the direction to make the delivery larger.

3) Action for the direction of minimizing the pump delivery

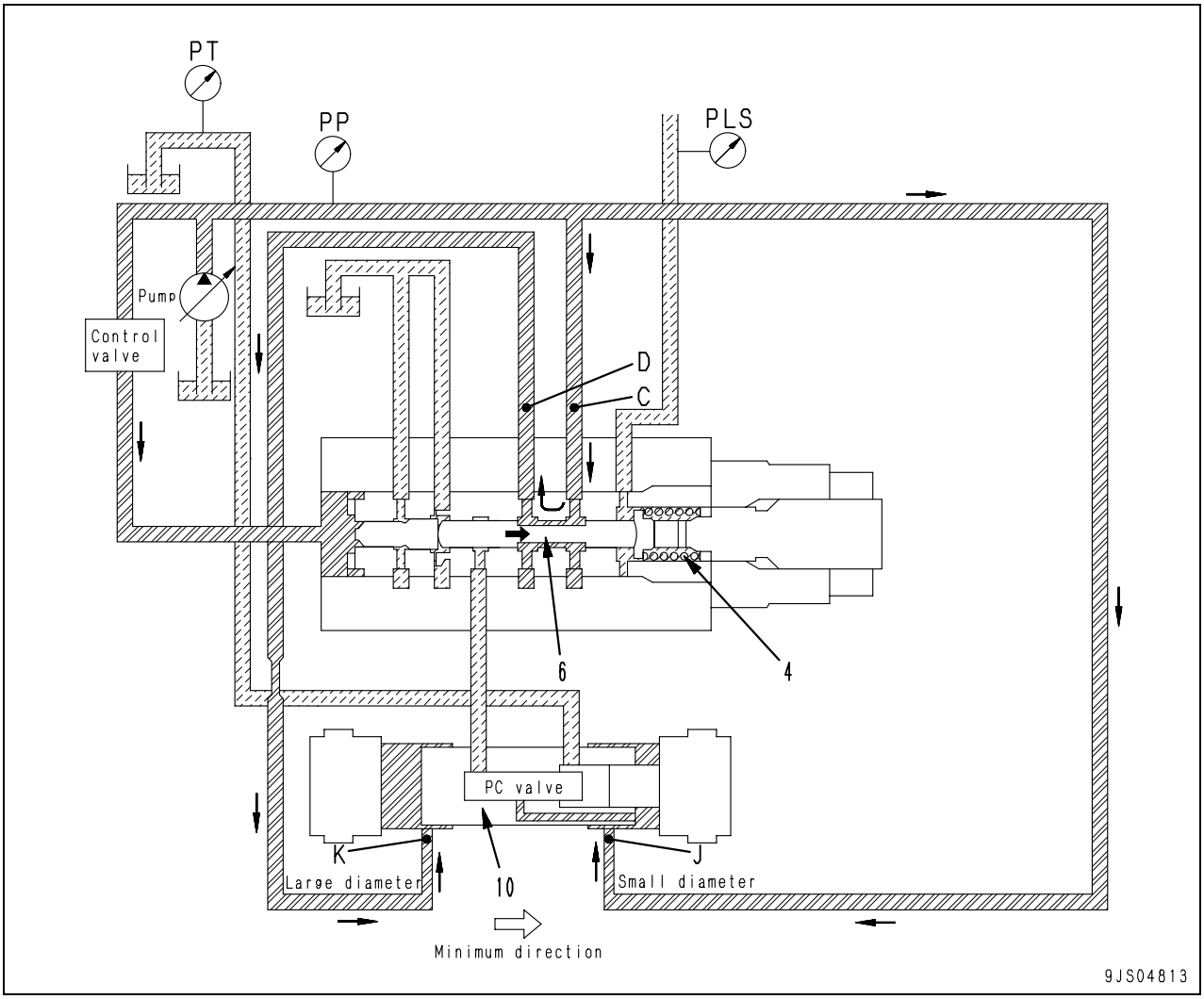

- When servo piston (10) moves to the right (in the direction of delivery smaller), LS differential pressure (ΔPLS) becomes larger [for example, when the area of opening of the control valve becomes smaller and pump discharge pressure (PP) rises], pump discharge pressure (PP) pushes spool (6) to the right.
- When spool (6) moves, pump discharge pressure (PP) flows from port (C) to port (D), and from port (K), it enters the large piston diameter end.
- Pump discharge pressure (PP) also enters the small piston diameter end, but because of the difference in area between the large and the small piston diameter ends of servo piston (10), servo piston (10) is pushed to the right.As a result, it moves in the direction to make the swash plate angle smaller.

4) When servo piston is balanced

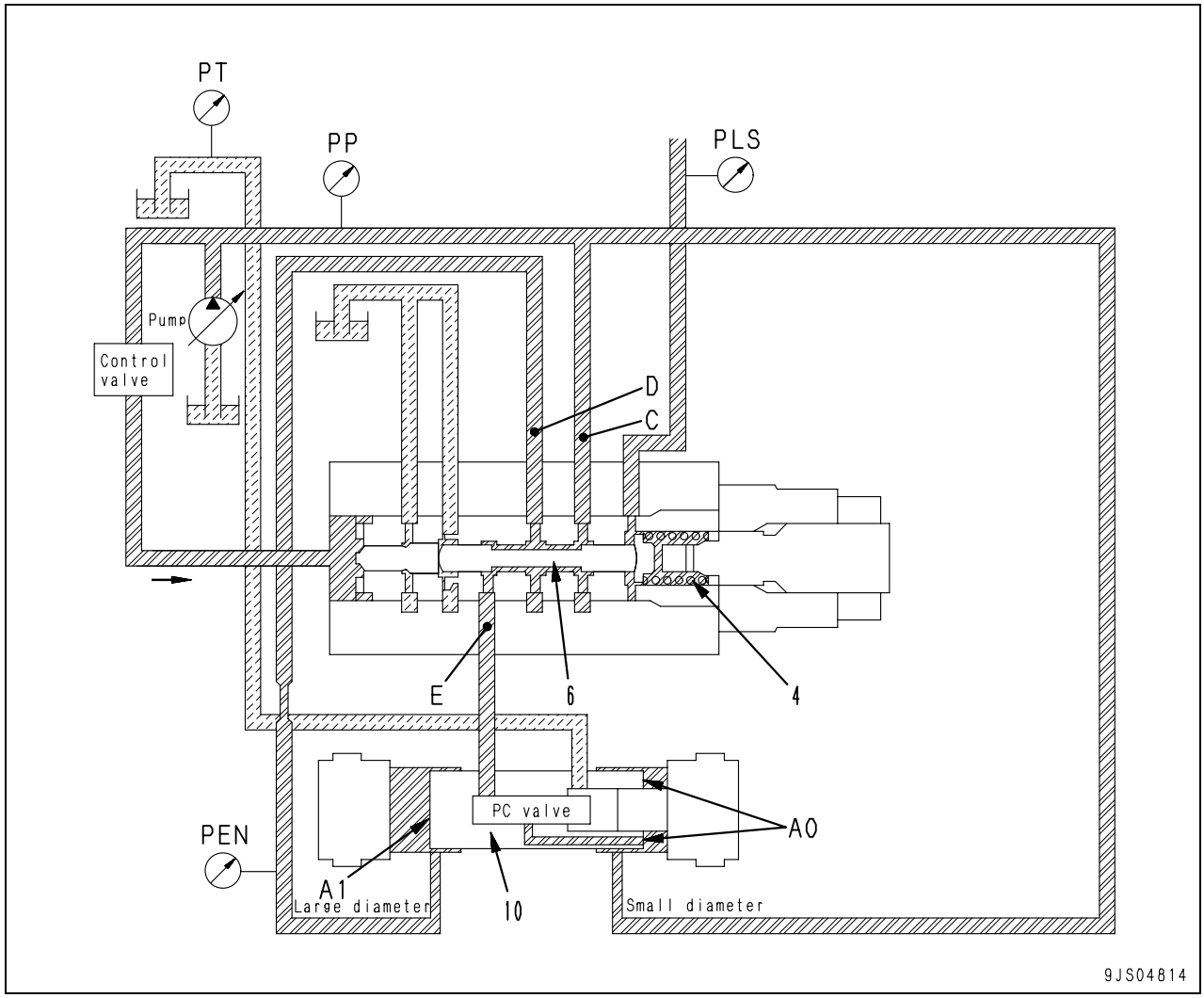

- Let us take the area receiving the pressure at the large diameter end of the piston as (A1), the area receiving the pressure at the small diameter end as (A0), and the pressure flowing into the large diameter end of the piston as (PEN).
- If pump discharge pressure (PP) of the LS valve and the combined force of spring (4) and LS pressure (PLS) are balanced, and the relationship becomes (A0) x (PP) = (A1) x (PEN), servo piston (10) stops at that position.
- And the swash plate of the pump will be held in an intermediate position. [Spool (6) will be stopped at a position where the distance of the opening from port (D) to port (E) and the distance from port (C) to port (D) is almost the same.]
- The relationship between the area receiving the pressure at both ends of servo piston (10) is (A0):(A1) = 3:5, so the pressure applied to both ends of the piston when it is balanced becomes (PP):(PEN) ≒ 5 : 3.
- The position where spool (6) is balanced and stopped is the standard center, and the force of spring (4) is adjusted so that it is determined when (PP) – (PLS) = 1.96 MPa {20kg/cm^2}.

2. PC valve

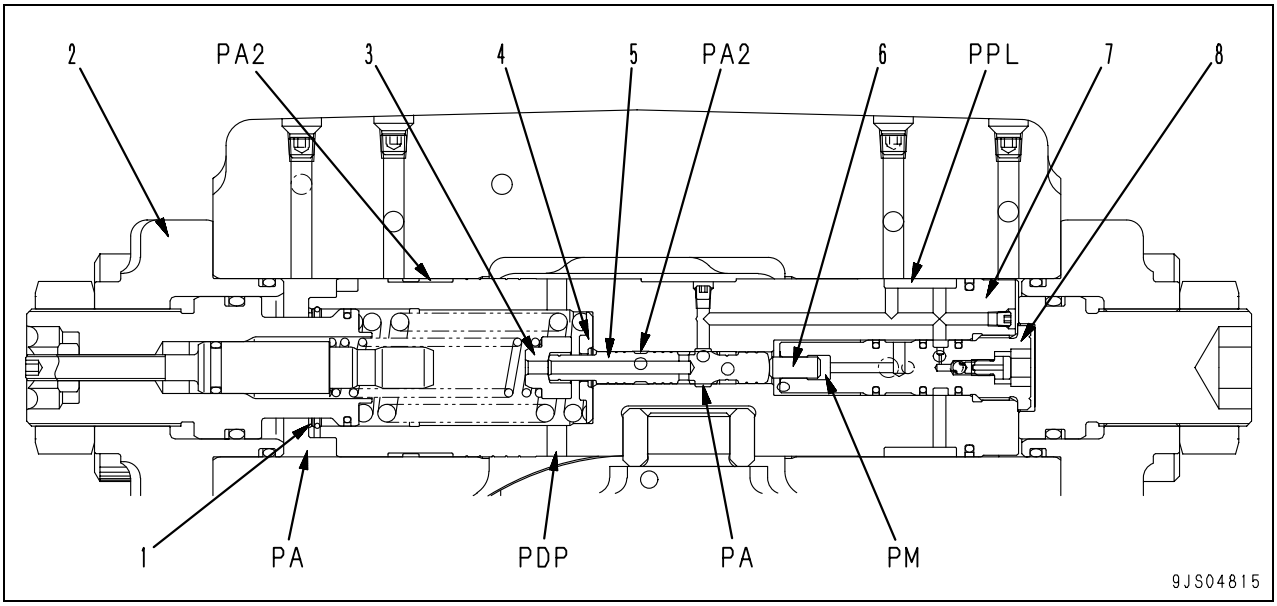

PA: Pump port
PA2: Pump pressure pilot port
PDP: Drain port
PM: Mode selector pressure pilot port
PPL: Control pressure output port (to LS valve)

1. Wiring
2. Cover
3. Seat
4. Retainer
5. Spool
6. Pin
7. Servo piston assembly
8. Plug

Function

- When the pump discharge pressure (PP) is high, the PC valve controls the pump so that no more oil than the constant flow (in accordance with the discharge pressure) flows even if the stroke of the control valve becomes larger. It carries out equal horsepower control so that the horsepower absorbed by the pump does not exceed the engine horsepower.
- If the load during the operation becomes larger and the pump discharge pressure (PP) rises, it reduces the delivery from the pump.
- If the pump discharge pressure drops, it increases the delivery from the pump.
- In this case the relationship between pump discharge pressure (PP) and pump delivery (Q) with the electric current value (X) given to PC-EPC valve solenoid as the parameter is shown in the diagram.

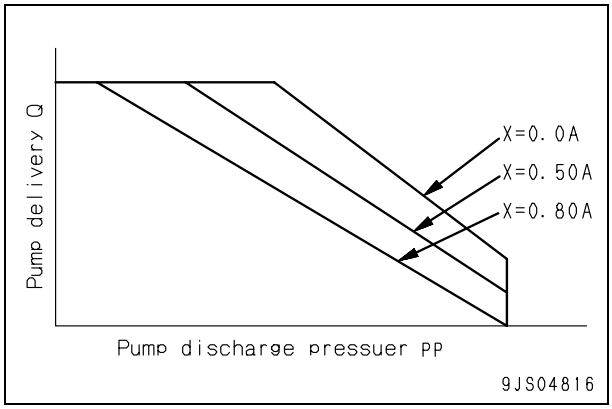

Operation

1) When pump controller is normal

(1) When the load on the actuator is small and pump discharge pressure (PP) is low

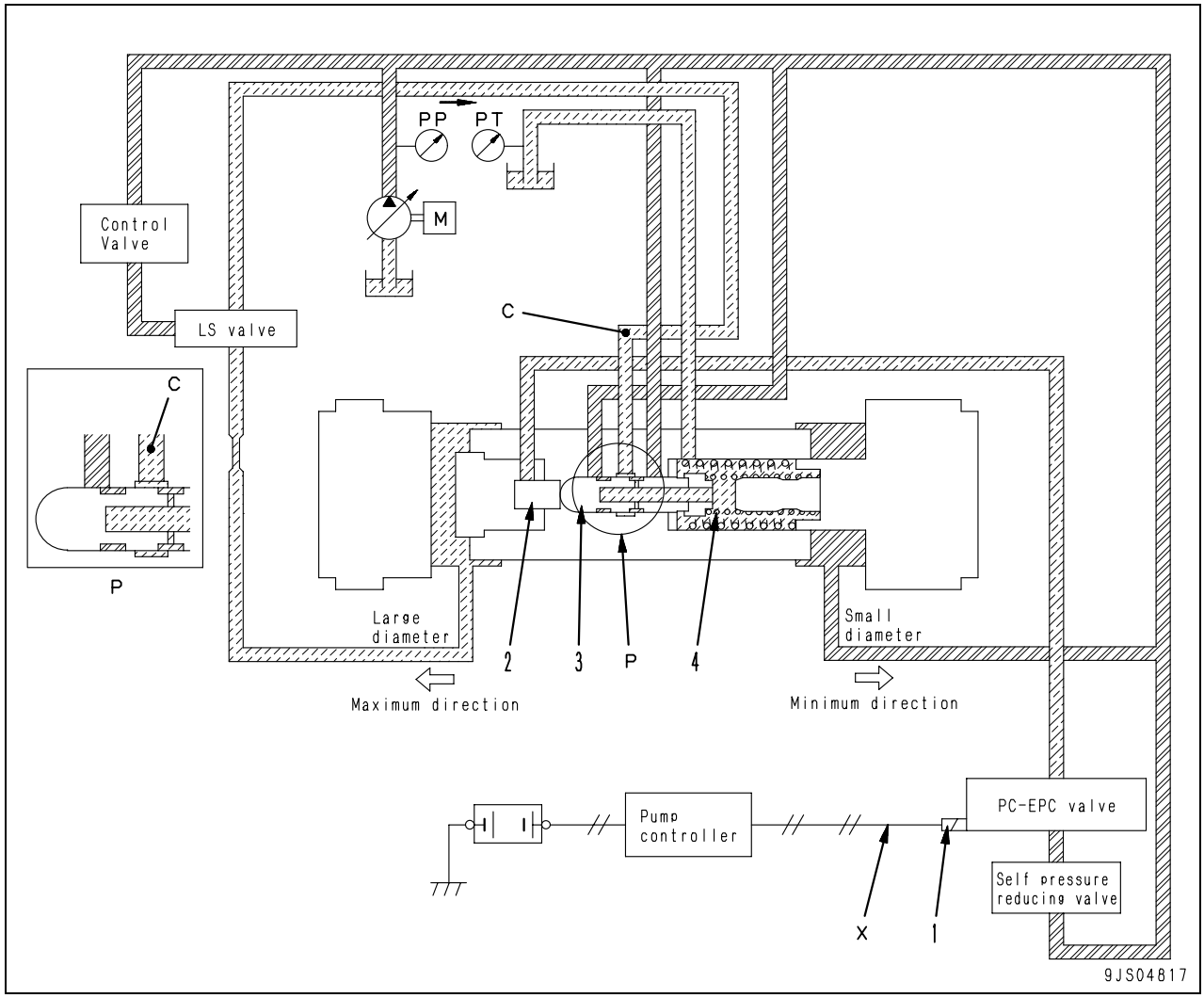

Action of PC-EPC valve solenoid (1)

- Command current (X) is being sent to PC-EPC valve solenoid (1) from the pump controller.
- This command current (X) works on PC-EPC valve and output the signal pressure to changes the force of pushing piston (2).
- Spool (3) stops at a position where the combined force pushing spool (3) by the spring set pressure of spring (4) and pump discharge pressure (PP) is balanced.
- The pressure [port (C) pressure] output from PC valve is changed depending on the above position.

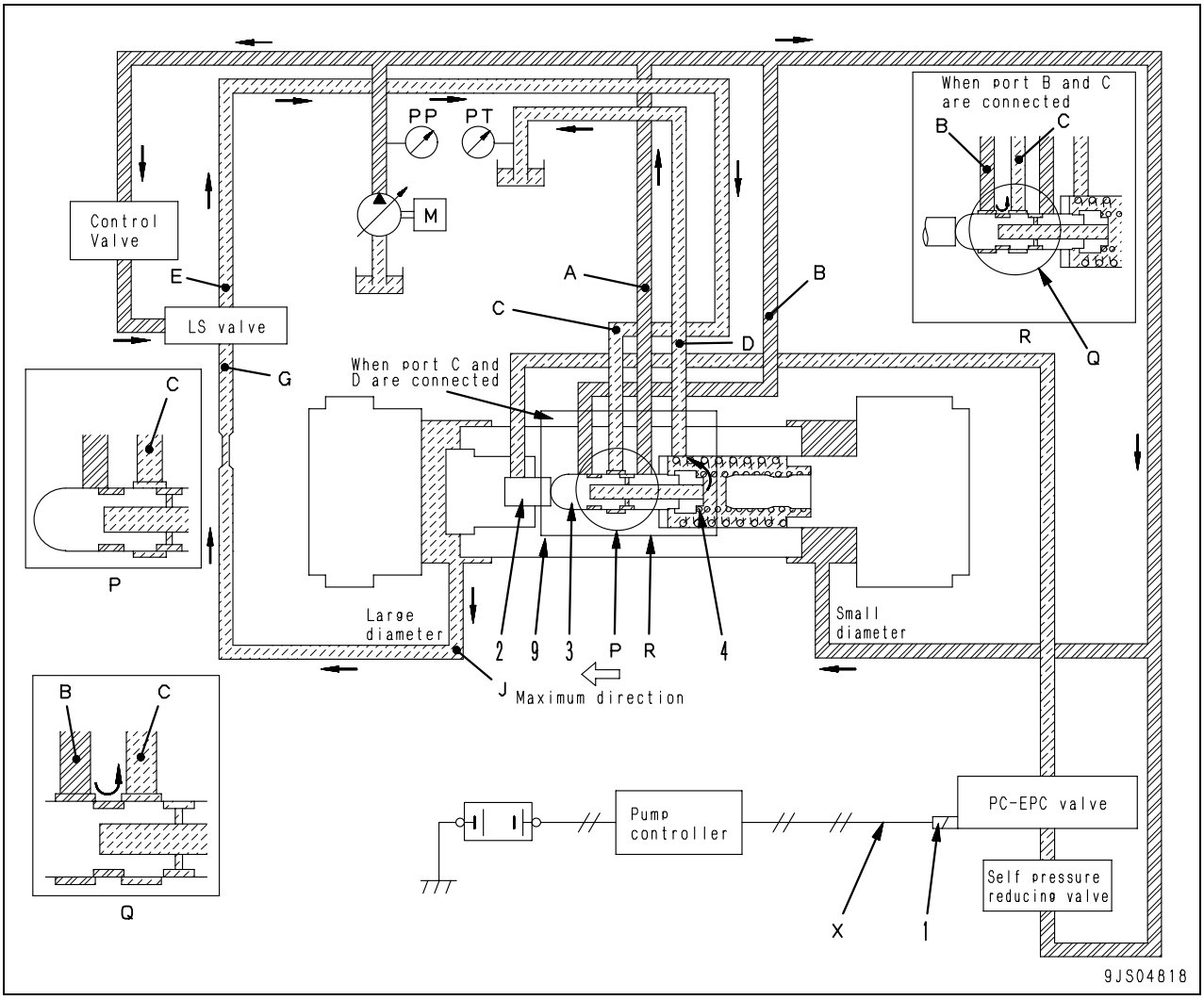

Action of spring

- The load of spring (4) at the PC valve is determined by the position of the swash plate.
- If servo piston (9) moves to the right, spring (4) is compressed.
- Spring load changes as servo piston (9) makes spring (4) elongate or contract.
- If the command current (X) to PC-EPC valve solenoid (1) changes, so does the force pushing piston (2).
- The load of spring (4) also changes according to the PC-EPC valve solenoid command current (X).

- Port (C) of the PC valve is connected to port (E) of the LS valve.
- Pump discharge pressure (PP) is applied to the small piston diameter end of servo piston (9), port (A) and port (B).
- When pump discharge pressure (PP) is small, spool (3) is on the left.
- Ports (C) and (D) are connected, and the pressure entering the LS valve becomes drain pressure (PT).
- If port (E) and port (G) of the LS valve are connected, the pressure entering the large diameter end of the piston from port (J) becomes drain pressure (PT), and servo piston (9) moves to the left side.
- The pump delivery will be set to the increasing trend.
- Spring (4) extends as servo piston (9) moves and weakens the spring force.
- As the spring force is weakened, spool (3) moves to the right, the connecting between port (C) and port (D) is shut off and the pump discharge pressure ports (B) and (C) are connected.
- The pressure on port (C) rises and the pressure on the large diameter end of the piston also rises. Thus, the leftward move of servo piston (9) is stopped.
- The stop position for servo piston (9) [= pump delivery] is decided at the point where the force of spring (4) and the pushing force of PC-EPC valve by solenoid and the pushing force created by pressure (PP) acting on spool (3) are in balance.

(2) When the load on the actuator is large and pump discharge pressure (PP) is high

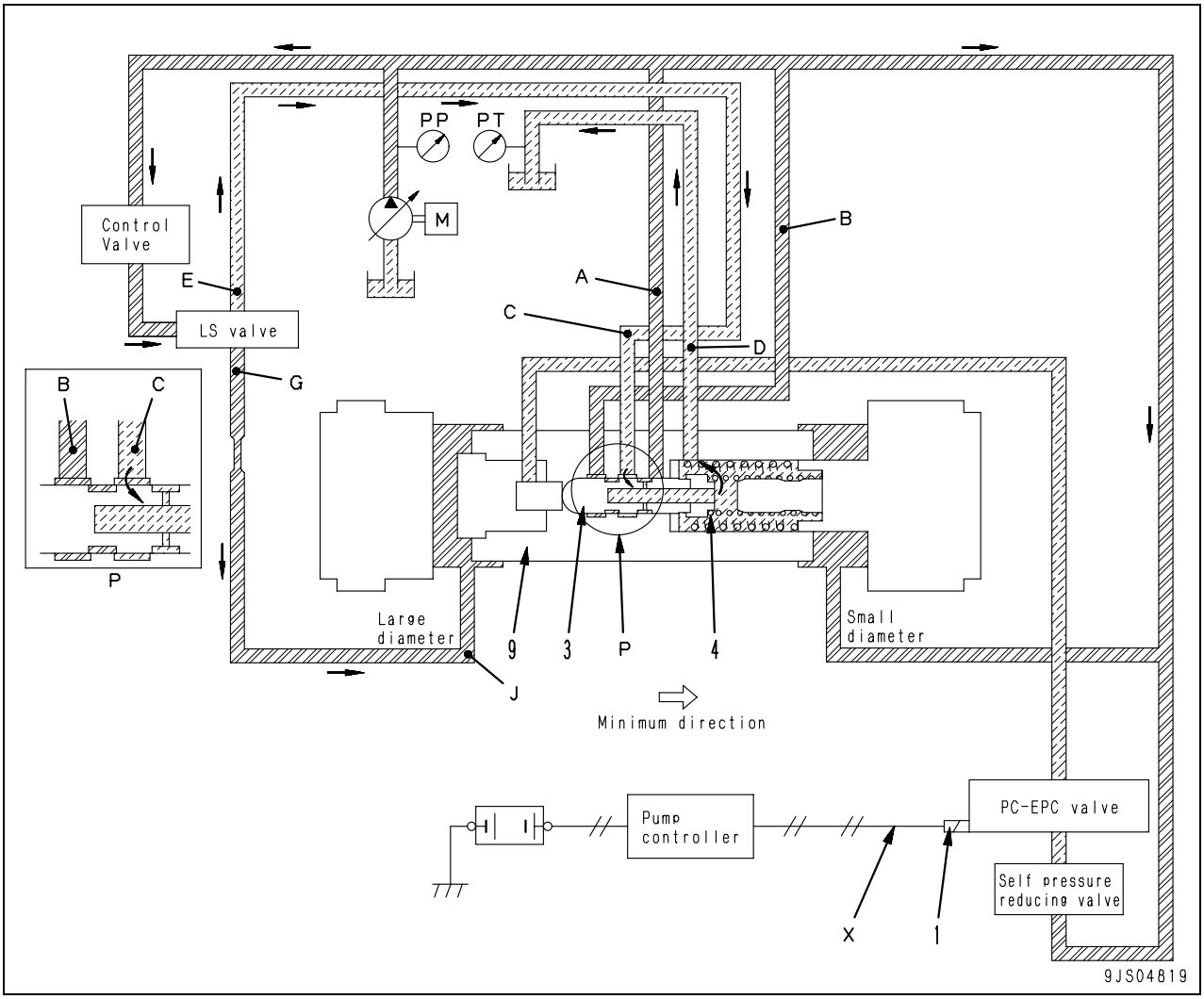

Outline

- When the load is large and pump discharge pressure (PP) is high, the force pushing spool (3) to the right becomes larger and spool (3) moves to the position shown in the diagram above.
- As shown in the diagram above, part of the pressurized oil from port (B) flows out to port (D) from port (C) through the LS valve, and the pressure oil flowing from port (C) to the LS valve becomes approximately half of pump discharge pressure (PP).

Operation

- When port (E) and port (G) of the LS valve are connected, this pressure from port (J) enters the large diameter end of servo piston (9), stopping servo piston (9).
- If pump discharge pressure (PP) increases further and spool (3) moves further to the right, pump discharge pressure (PP) flows to port (C) and acts to make the delivery the minimum.
- If servo piston (9) moves to the right, spring (4) is compressed and push back spool (3).
- When spool (3) moves to the left, the openings of port (C) and port (D) become larger.
- The pressure on port (C) (= J) is decreased and the rightward move of servo piston (9) is stopped.
- The position in which servo piston (9) stops when this happens is further to the right than the position when pump discharge pressure (PP) is low.

- The relationship between pump discharge pressure (PP) and pump delivery (Q) is shown in the diagram.

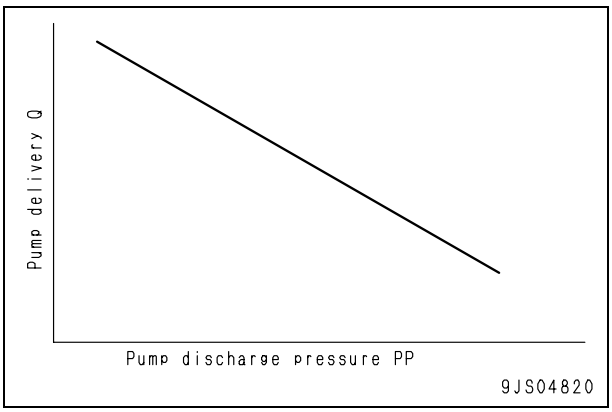

- If command current (X) sent to PC-EPC valve solenoid (1) increases, the relationship between pump discharge pressure (PP) and pump delivery (Q) moves parallel in proportion to the pushing force of PC-EPC valve solenoid.
- Because the pushing force of PC-EPC valve solenoid (1) is added to the pushing force of spool (3) to the right by pump discharge pressure (PP), the relationship between pump discharge pressure (PP) and pump delivery (Q) moves from (A) to (B) in accordance with the increase of command current (X).

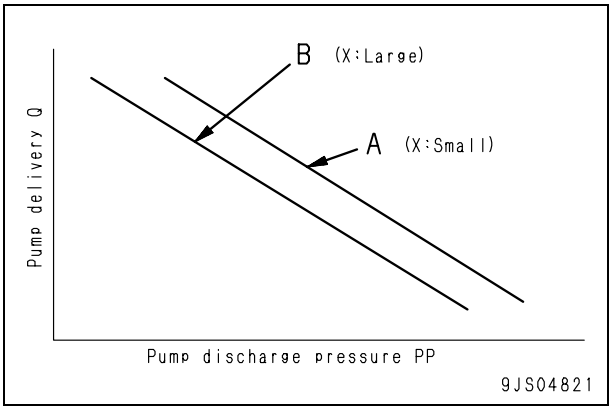

2) As the emergency pump drive switch is turned on due to failure on the pump controller

(1) When the main pump is under light load

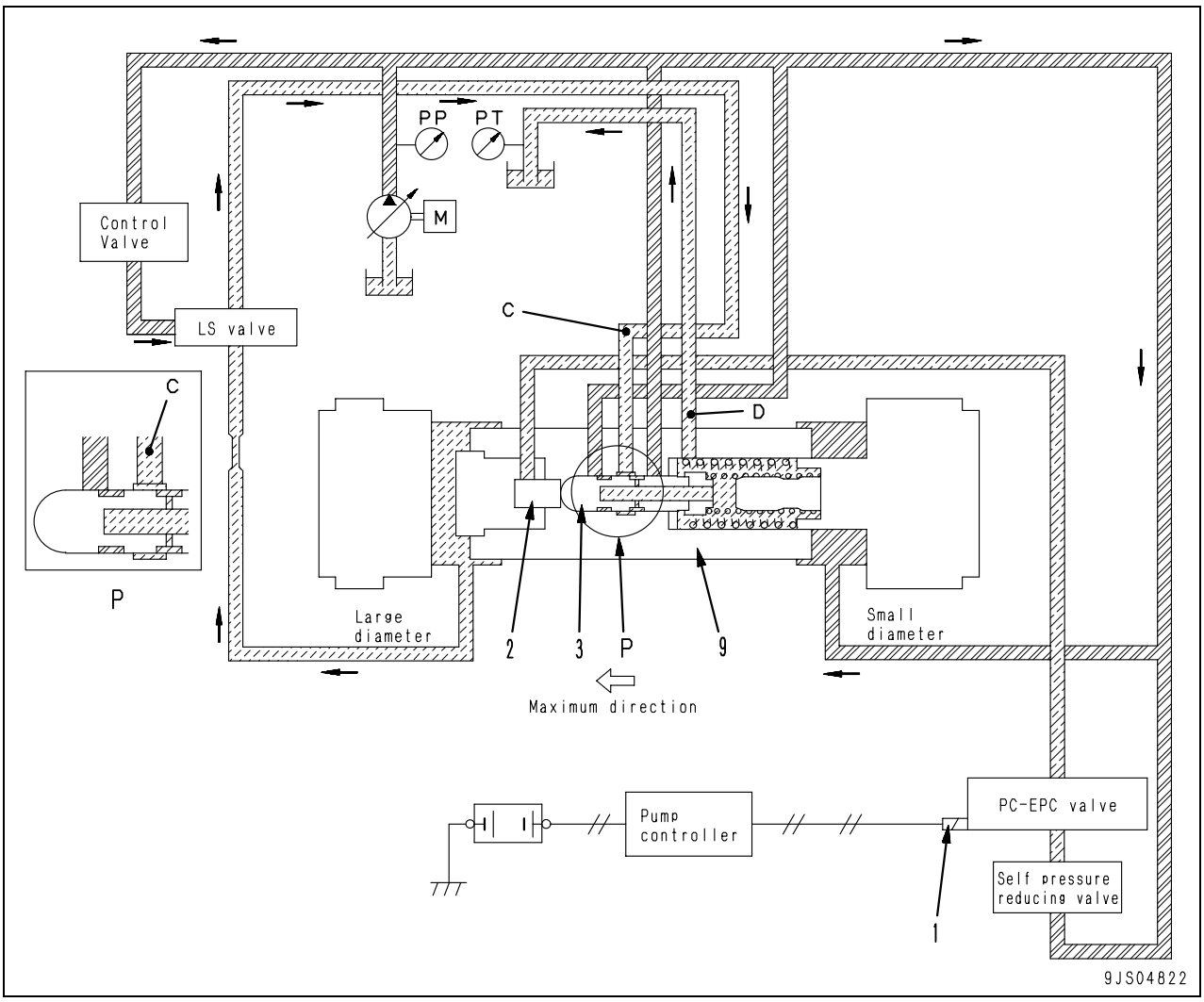

- If there is a failure in the pump controller, the emergency pump drive switch is turned ON to hand the control to the resistor side.
- In this case, the power is directly supplied from the battery. The current, however, is too large as is, so the resistor is set in between to control the current flowing to PC-EPC valve solenoid (1).
- The current becomes constant, so the force pushing piston (2) is also constant.
- When pump discharge pressure (PP) is low, spool (3) is balanced at left position, since the combined force of PC-EPC valve solenoid (1) and pump discharge pressure (PP) is smaller than the spring set force.
- At this point, port (C) is connected to the drain pressure of port (D), and the large diameter end of the piston of servo piston (9) also becomes the drain pressure (PT) through the LS valve.
- Since the pressure on the small diameter end of the piston large, servo piston (9) moves in the direction to make the delivery larger.

(2) When the main pump is under heavy load

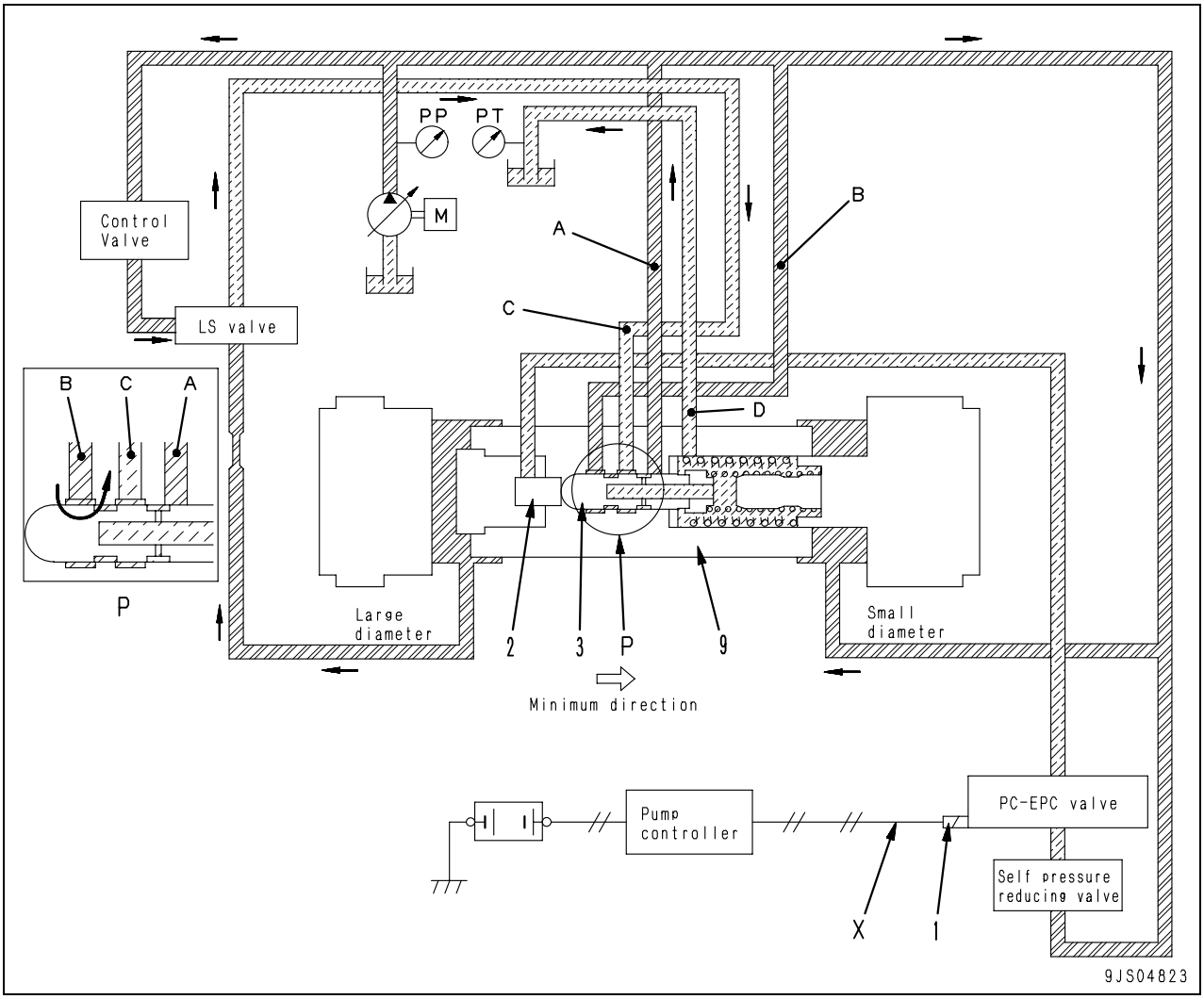

- If the emergency pump drive switch is turned on In the same way as in above, the command current (X) sent to PC-EPC valve solenoid (1) becomes constant.
- For this reason, the force of piston (2) pushing spool (3) is constant.
- If pump discharge pressure (PP) increases, spool (3) moves to the right from the position where the load of the pump is smaller, and balanced at the above diagram position.
- In this case, the pressure from port (B) flows to port (C), so servo piston (9) moves to the right (smaller pump delivery) and stops at a position to the further to the right then when the load on the pump is light.
- The curb of pump discharge pressure (PP) and pump delivery (Q) is shown in the diagram. It is determined corresponding to the electric current value sent from the PC-EPC valve solenoid through the resistor even when the emergency pump driving switch turns ON.
- The curve resulting when the emergency pump drive switch is ON is situated further to the left (B) than when the pump controller is normal (A).

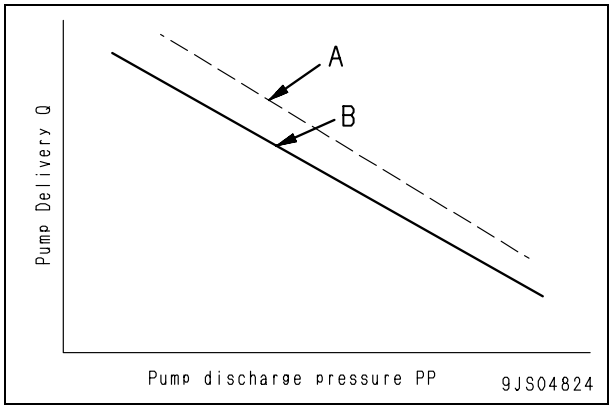

3. PC-EPC valve

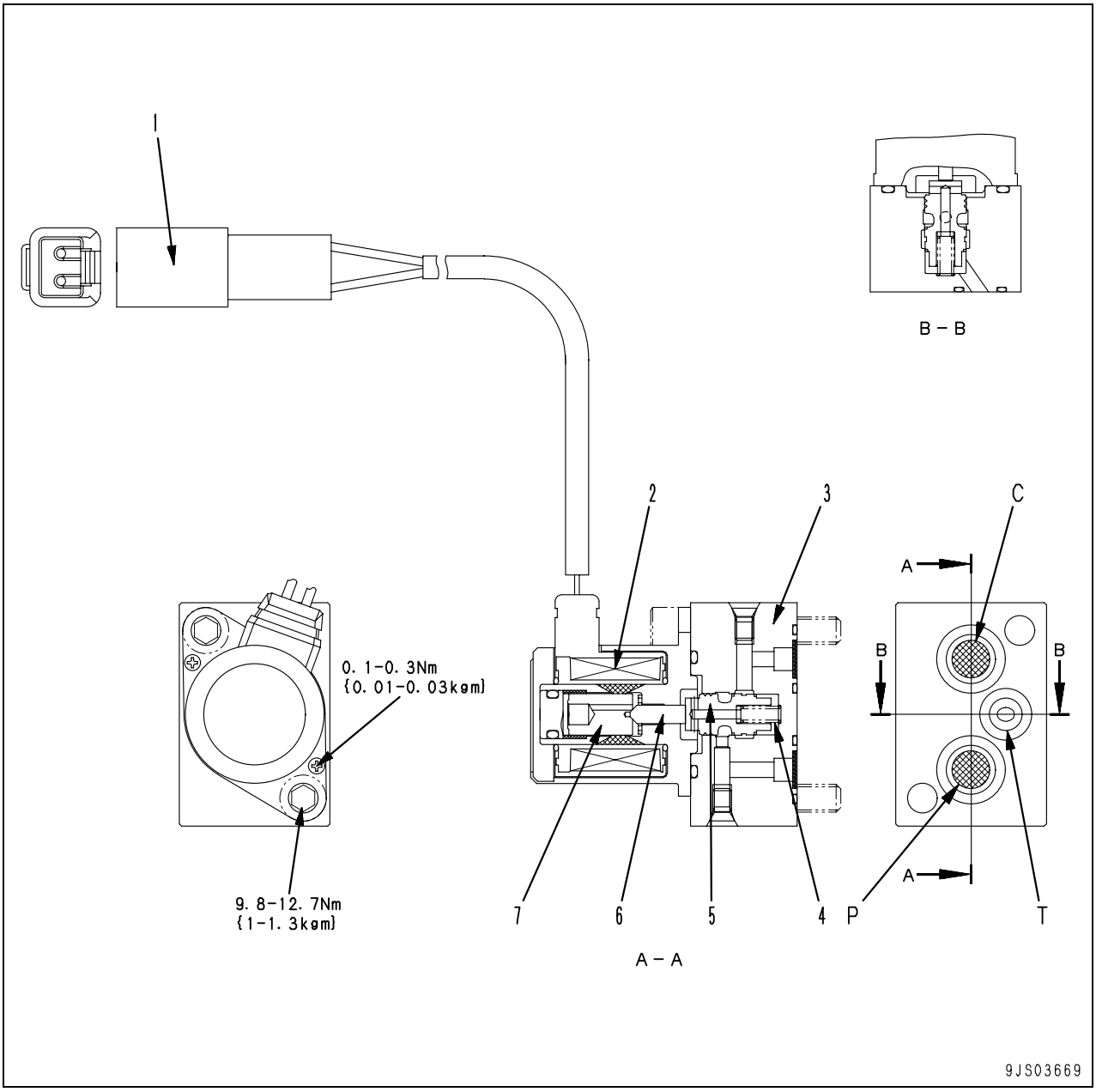

C: To PC valve
P: From self pressure reducing valve
T: To tank

1. Connector
2. Coil
3. Body
4. Spring
5. Spool
6. Rod
7. Plunger

Function

- The EPC valve consists of the proportional solenoid portion and the hydraulic valve portion.
- On receiving signal current (i) from the controller, the EPC valve generates EPC output pressure in proportion to the signal current and outputs it to the PC valve.

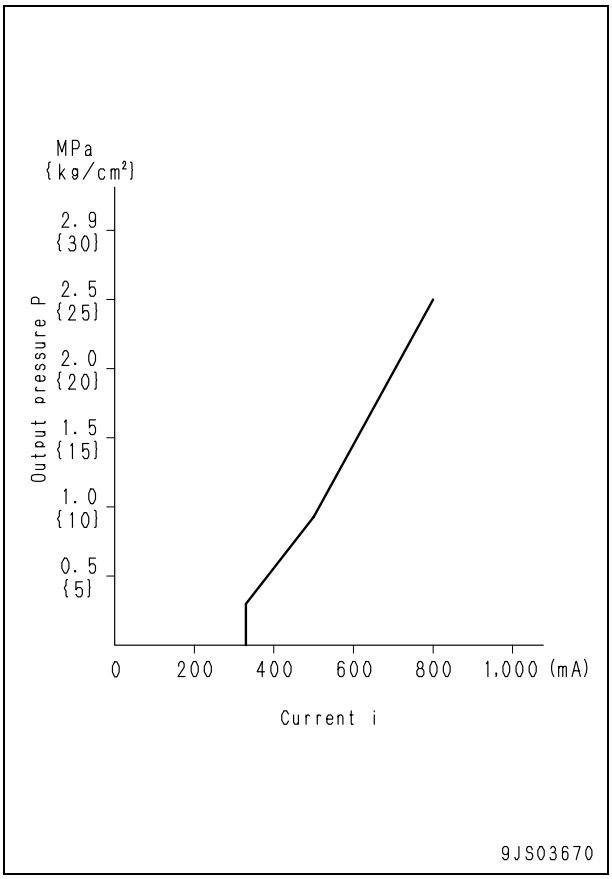

Operation

1) When signal current is 0 (Coil is de-energized)

- When there is no signal current flowing from the controller to coil (2), coil (2) is de-energized.
- Spool (5) is pushed to the left by spring (4).
- Since port (P) is closed, the pressurized oil from self pressure reducing valve does not flow to the PC valve.
- The oil from the PC valve is drained through ports (C) and (T) to the tank.

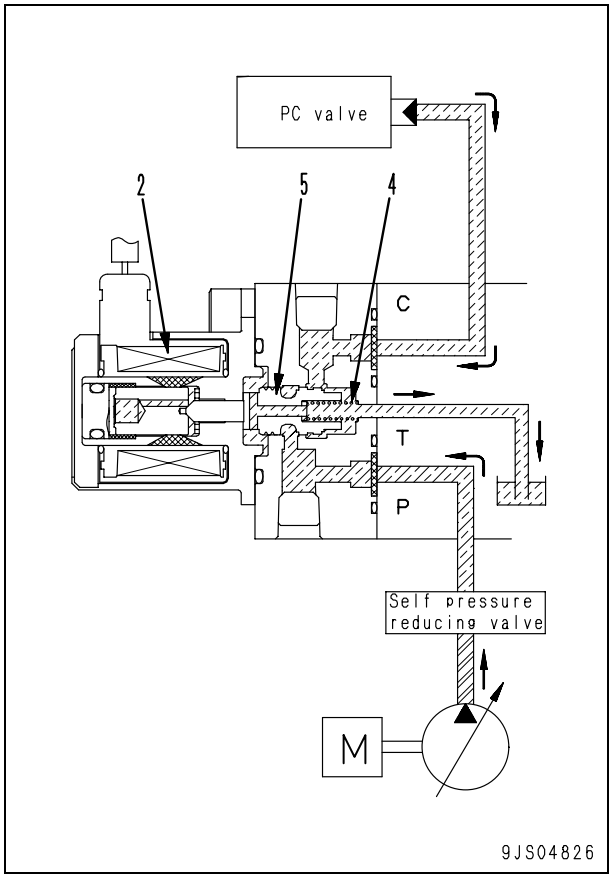

2) When signal current is very small (coil is energized)

- When a very small signal current flows to coil (2), coil (2) is energized, and a propulsion force is generated on the right side of plunger (7).
- Rod (6) pushes spool (5) to the right, and pressurized oil flows from port (P) to port (C).
- Pressures on port (C) increases and the force to act on spool (5) surface and the spring load on spring (4) become larger than the propulsion force of plunger (7).
- Spool (5) is pushed to the left, and port (P) is shut off from port (C).
- Port (C) and port (T) are connected.
- Spool (5) moves up and down so that the propulsion force of plunger (7) may be in balance with pressure of port (C) + spring load of spring (4).
- Circuit pressure between the EPC valve and PC valve is controlled in proportion to the size of the signal current.

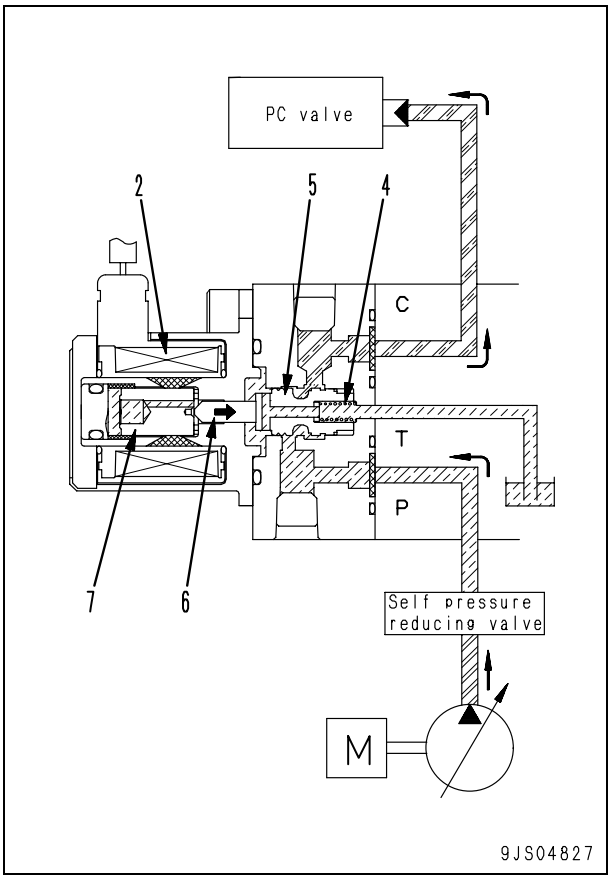

3) When signal current is maximum (coil is energized)

- As the signal current flows to coil (2), coil (2) is energized.
- When this happens, the signal current is at its maximum, so the propulsion force of plunger (7) is also at its maximum.
- Spool (5) is pushed toward the right side by rod (6).
- Hydraulic oil from port (P) flows to port (C) with maximum flow rate. As the result, the circuit pressure between the EPC and PC valves becomes maximum.
- Since port (T) is closed, pressurized oil does not flow to the tank.

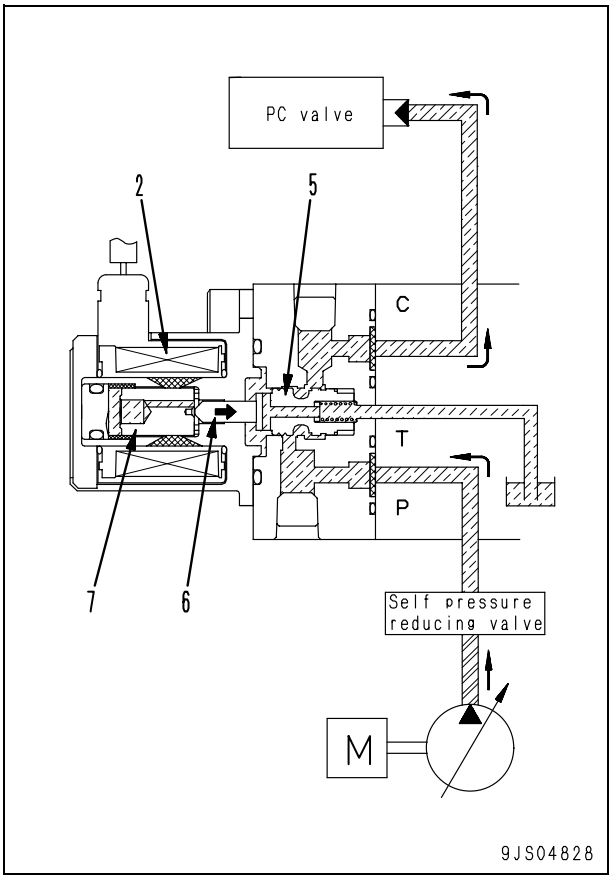

Hydraulic oil cooler bypass valve

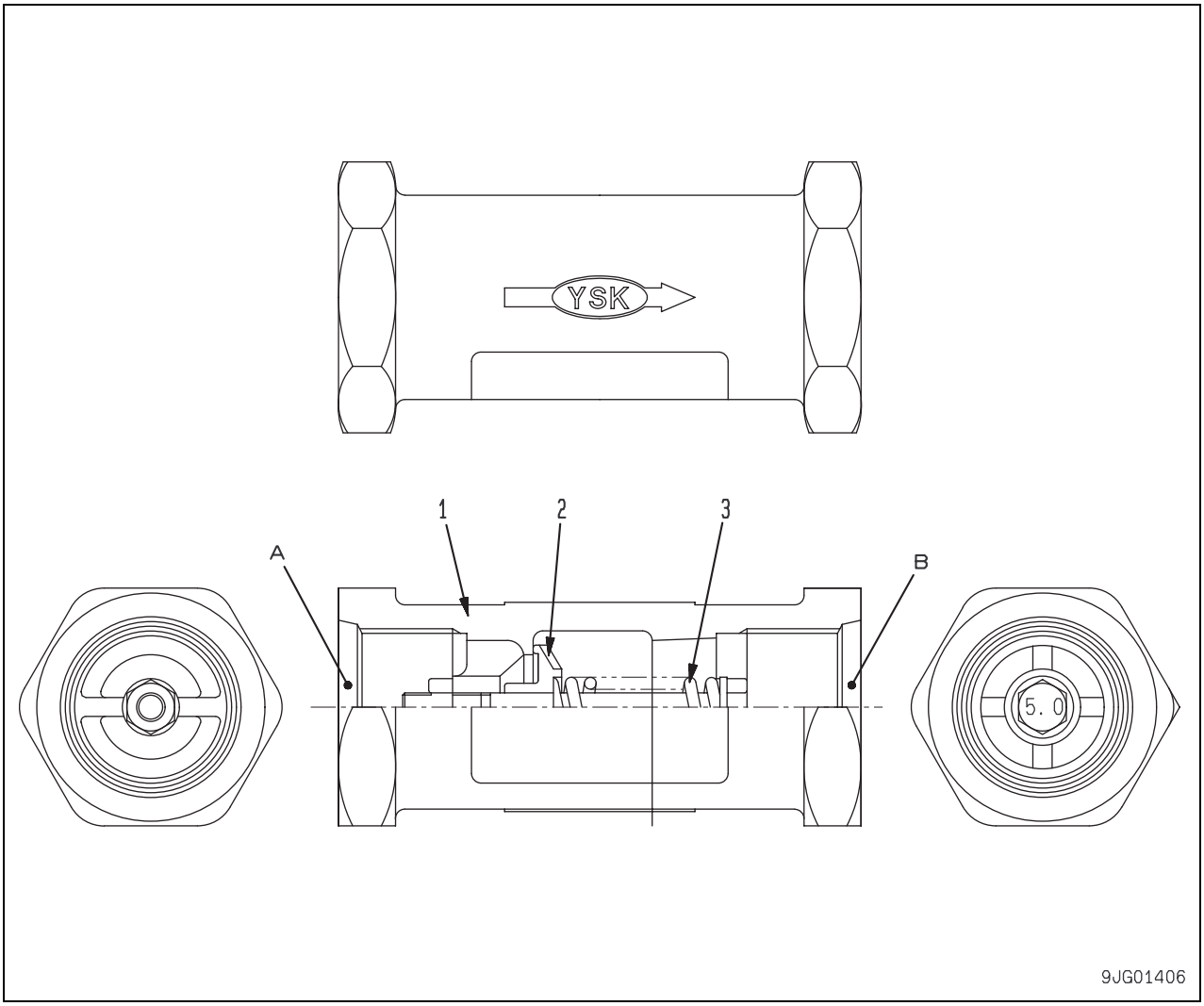

1. Body
2. Valve
3. Spring

A: Hydraulic oil cooler inlet
B: To hydraulic tank

Outline

- This valve is installed in the oil cooler inlet circuit. If any abnormal pressure is generated in the oil flowing to the oil cooler, this valve acts to return the oil directly to the hydraulic tank.

	Set pressure
Cracking pressure (MPa {kg/cm^2})	0.5 {5.1}

Steering, brake control

★ Regarding the transmission-related description of the operation of the PCCS lever, see Transmission control.
★ PCCS: Palm Command Control System

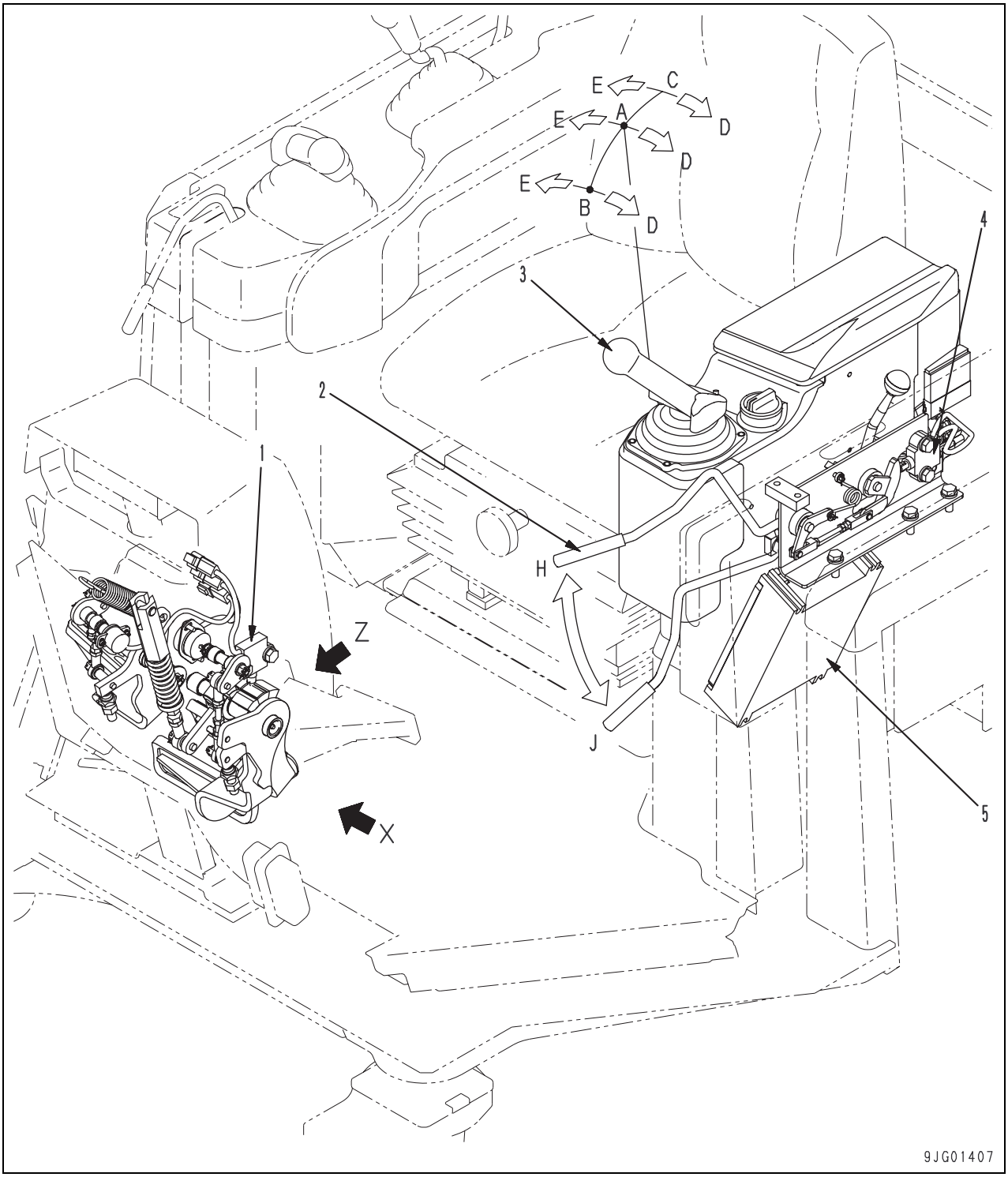

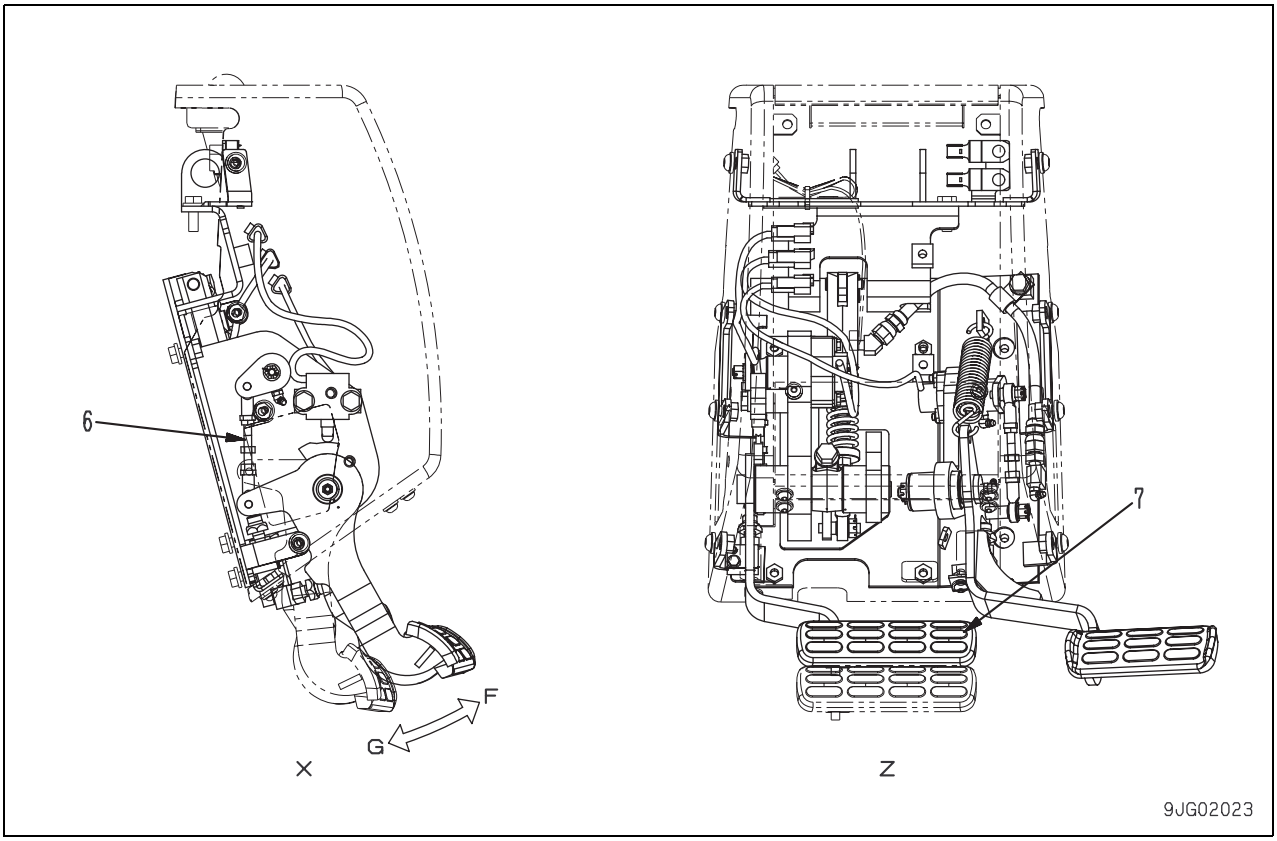

1. Potentiometer
2. Lock lever
3. PCCS lever (Steering)
4. Limit switch
5. Power train controller
6. Rod (From brake pedal)
7. Brake pedal

Positions of levers and pedals

A: Neutral
B: Forward straight
C: Reverse straight
D: Left turn
E: Right turn
F: Brake OFF
G: Brake ON
H: Free
J: Lock

Outline

- PCCS lever (3) sends electric signals to power train controller (5). Upon receiving those signals, power train controller (5) sends signals to the EPC valve of the control valve to change the delivery of the pump and operate the steering motor.
- Brake pedal (7) receives signals from potentiometer (1) through rod (6). Then, power train controller (5) sends signals to the brake valve to operate the brake.
- Lock lever (2) is connected to limit switch (4) and used as the parking brake lever, too. When it is in lock position "J", power train controller (5) does not send turning signals to the EPC valve of the control valve.

Steering unit
(Bevel gear shaft, HSS and brake)

★ HSS: Abbreviation for Hydrostatic Steering System

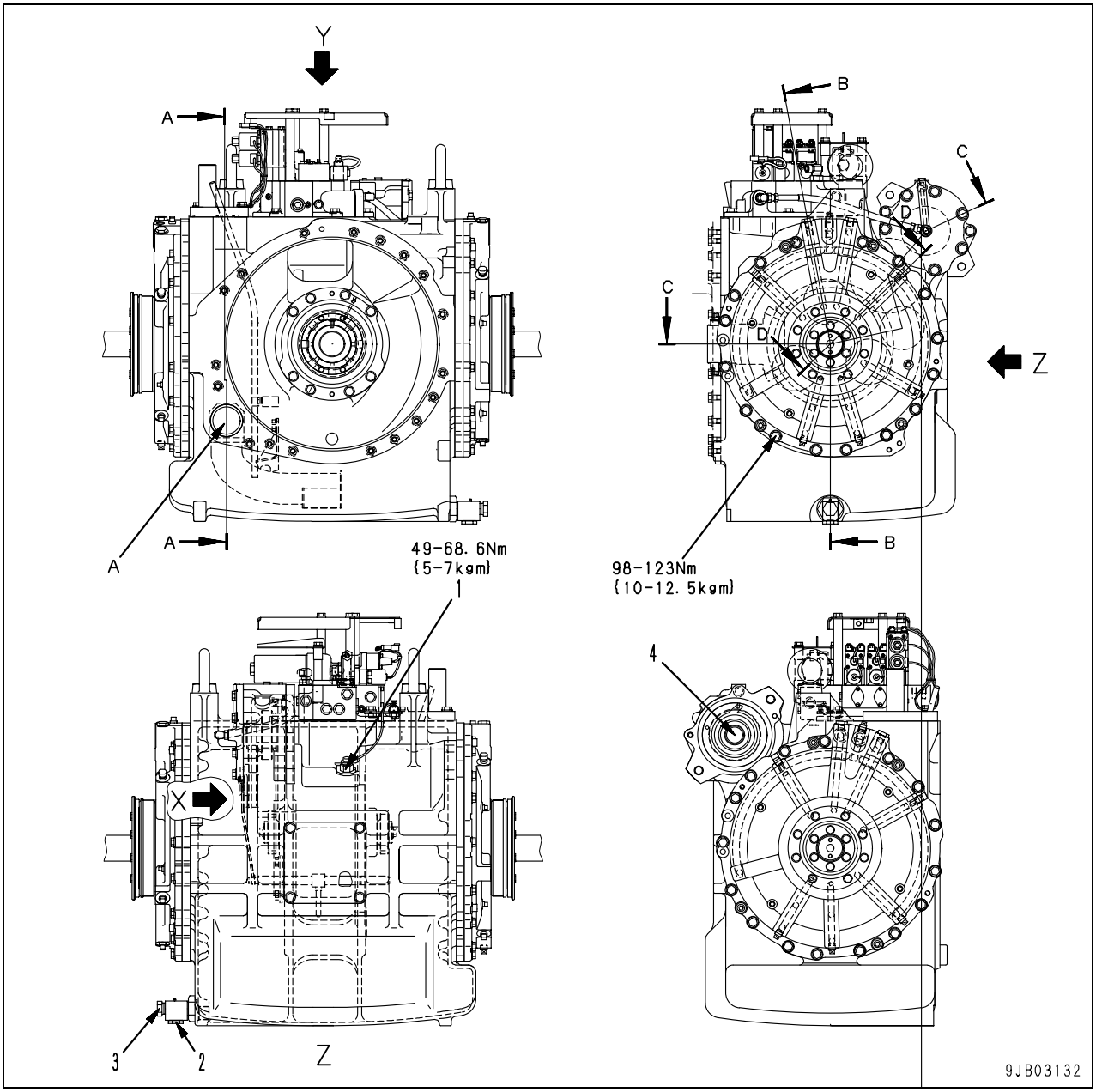

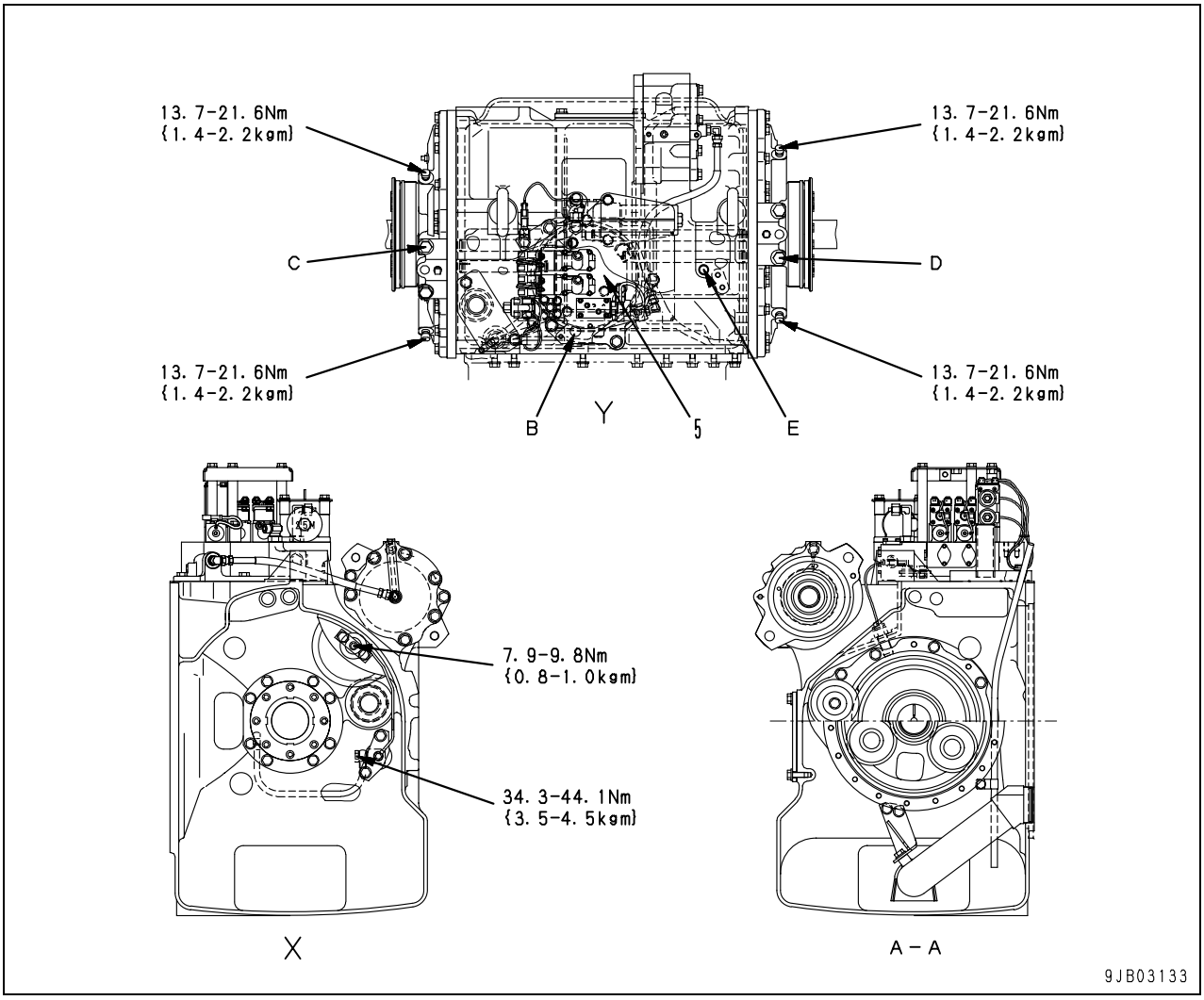

A: To transmission case
B: From scavenging pump, steering lubrication pump
C: R.H. brake oil pressure pickup port (RB)
D: L.H. brake oil pressure pickup port (LB)
E: From the pin puller solenoid valve (Drain)

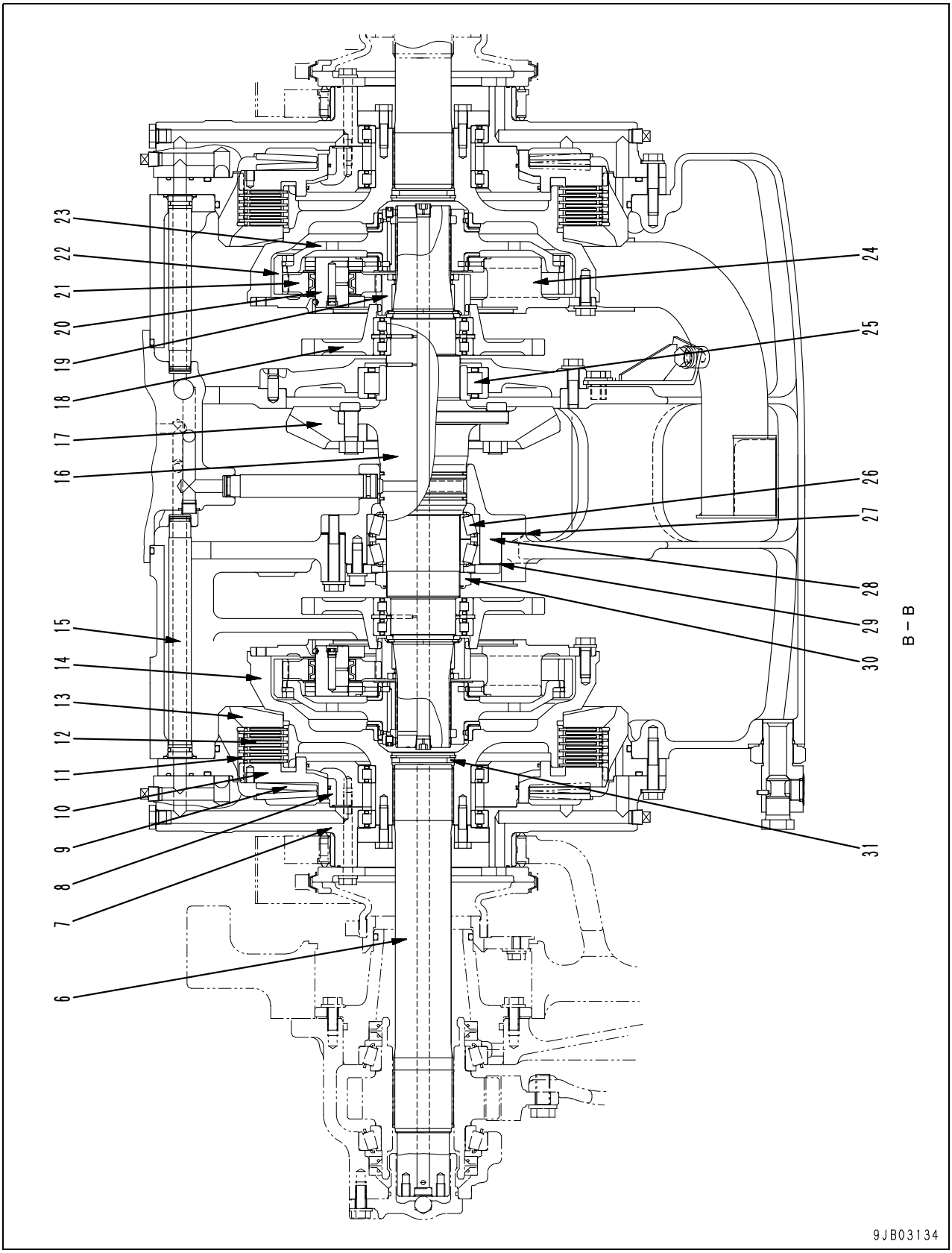
23
22
21
20
19
18
17
16
15
14
13
12
11
10
9
8
7
6
24
25
26
27
28
29
30
31
B – B
9JB03134

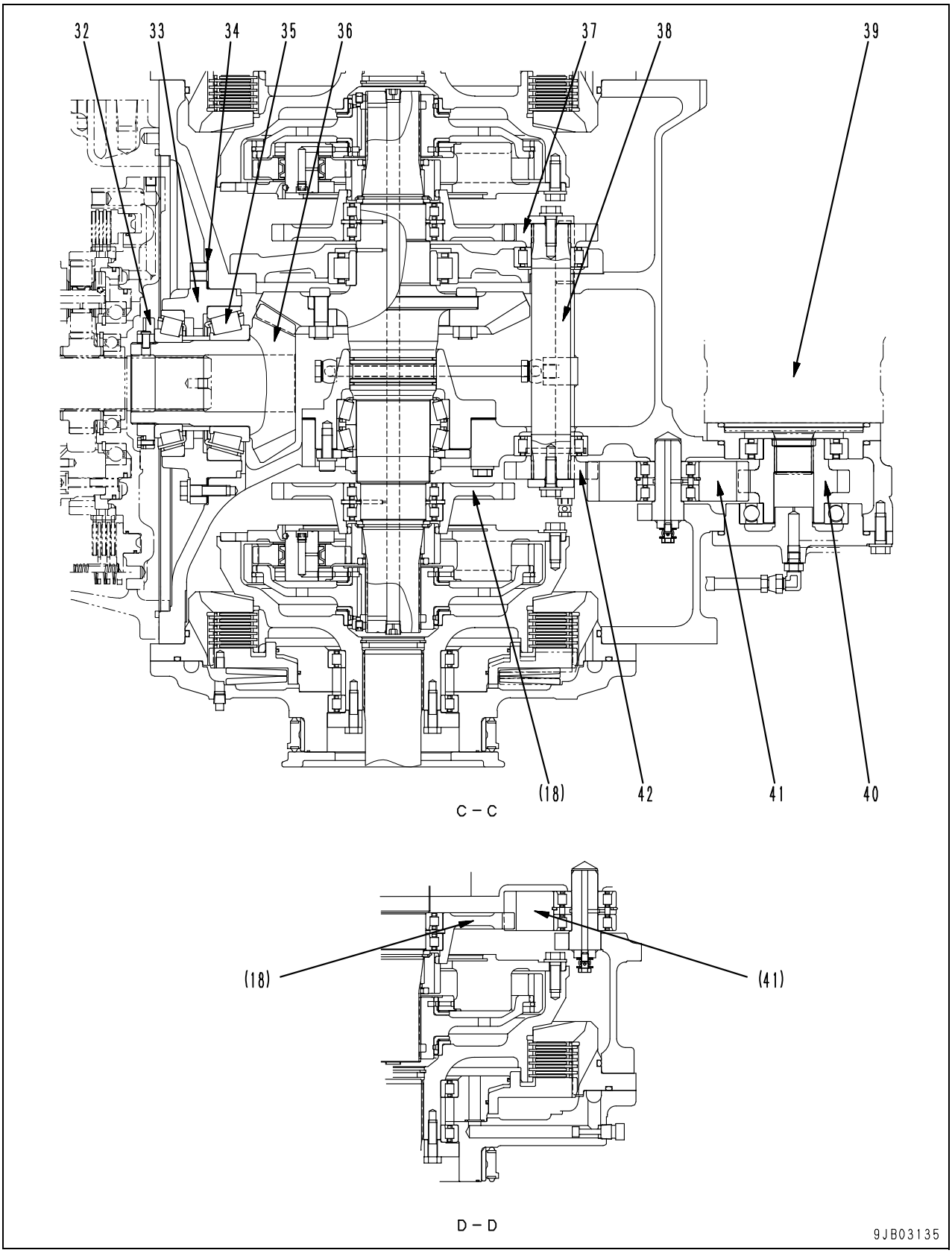
32
33
34
35
36
37
38
39
(18)
42
41
40
C – C
(18)
(41)
D – D
9JB03135

1. Bevel gear speed sensor
2. Drain plug
3. Drain valve
4. HSS motor mounting port
5. Brake control valve
6. Output shaft
7. Case
8. Cylinder
9. Brake spring
10. Brake piston
11. Brake plate
12. Brake disc
13. Brake drum
14. Brake hub
15. Tube
16. Bevel gear shaft
17. Bevel gear (number of teeth: 32)
18. Gear A (number of teeth: 45)
19. Sun gear (number of teeth: 34)
20. Pinion shaft
21. Planetary pinion (number of teeth: 35)
22. Ring gear (number of internal teeth: 104)
23. Hub
24. Carrier
25. Bevel gear shaft bearing B
26. Bevel gear shaft bearing A
27. Shim A (for bevel gear adjustment)
28. Retainer
29. Shim B (for bevel gear adjustment)
30. Nut (for bevel gear shaft)
31. Spacer
32. Nut (for bevel pinion)
33. Cage
34. Shim C (for bevel pinion adjustment)
35. Bevel pinion bearing
36. Bevel pinion (number of teeth: 17)
37. Gear B (number of teeth: 16)
38. Shaft
39. HSS motor
40. Drive gear (number of teeth: 19)
41. Gear D (number of teeth: 28)
42. Gear C (number of teeth: 16)

Outline

Bevel gear shaft

- The engine power is transmitted through the torque converter to the transmission. Then, the bevel gear shaft system engages bevel pinion (36) with bevel gear (17) to turn the engine power at a right angle into the lateral direction and reduce the rotation speed.
- The bevel gear shaft system adopts the spiral bevel gear at bevel pinion (36) and bevel gear (17), and it adopts the splash lubrication with the oil from the steering lubrication pump and the scavenging pump for lubrication.
- The bevel gear shaft system consists of bevel pinion (36), bearing (35) which supports bevel pinion, cage (33), bevel gear (17) which meshes with the bevel pinion, bevel gear shaft (16), bearing (25) and (26) which support bevel shaft gear, and retainer (28).

HSS

- HSS is constructed from transfer area which transmits rotation of HSS motor (39) to gear A (18) by turning it in reverse direction, and the planet area which adjusts inputs from ring gear (22) and sun gear (19) and then outputs to carrier (24).It changes the turning of the machine by turning off the rotation of HSS motor (39), or by making it move in normal rotation or reverse rotation.
- The transfer unit employs a spur gear speed reduction mechanism and is lubricated with oil splashed by the steering lubrication pump and scavenging pump.
- Planet area adopts forced lubrication with oil from steering lubrication pump and scavenging pump for lubrication.
- The transfer unit consists of drive gear (40) connected to the HSS motor (39) by spline, gear D (41) meshed with the drive gear, gear C (42) meshed with gear D, gear B (37) connected to shaft (38), gear A (18) supported by the bearing on the bevel gear shaft and the steering case to support these parts.
- The planet area consists of sun gear (19), planetary pinion (21), pinion shaft (20), ring gear (22), hub (23) meshed with bevel gear shaft (16) and ring gear (22), and carrier (24) attached to brake hub (14).

Brake

- The brake is connected to the L.H. and R.H. HSS respectively. It controls the power transmitted from HSS to final drive to brake the machine.
- Brake adopts wet multiple disc clutch type and spring-boosted type, and it is hydraulic actuated type which activates brake control valve (5) by the operation of brake pedal.
- It adopts forced lubrication which sends oil from steering lubrication pump and scavenging pump to case (7) and brake drum (13) through passage inside steering case, and then to brake disc (12) and brake plate (11).
- When the engine is stopped, back pressure of brake piston (10) descends even if the brake pedal is not depressed, which initiates the brake to “operate“. However, parking brake lever must be in “lock“ position, because the brake is “released“ as the oil pressure within the circuit rises when the engine is restarted.
- The brake consists of brake hub (14) attached to carrier (24), brake disc (12) meshed with the brake hub, brake drum (13), brake plate (11) whose outside perimeter meshes with brake drum (13), brake piston (10) and brake spring (9) which bring brake disc and brake plate together, and cylinder (8) which supports all of them, case (7) and output shaft (6).
  Brake drum (13) and case (7) are fixed to the steering case.
  Also, output shaft (6) meshes to brake hub (14) by spline and is held by spacer (31) in the axial direction.

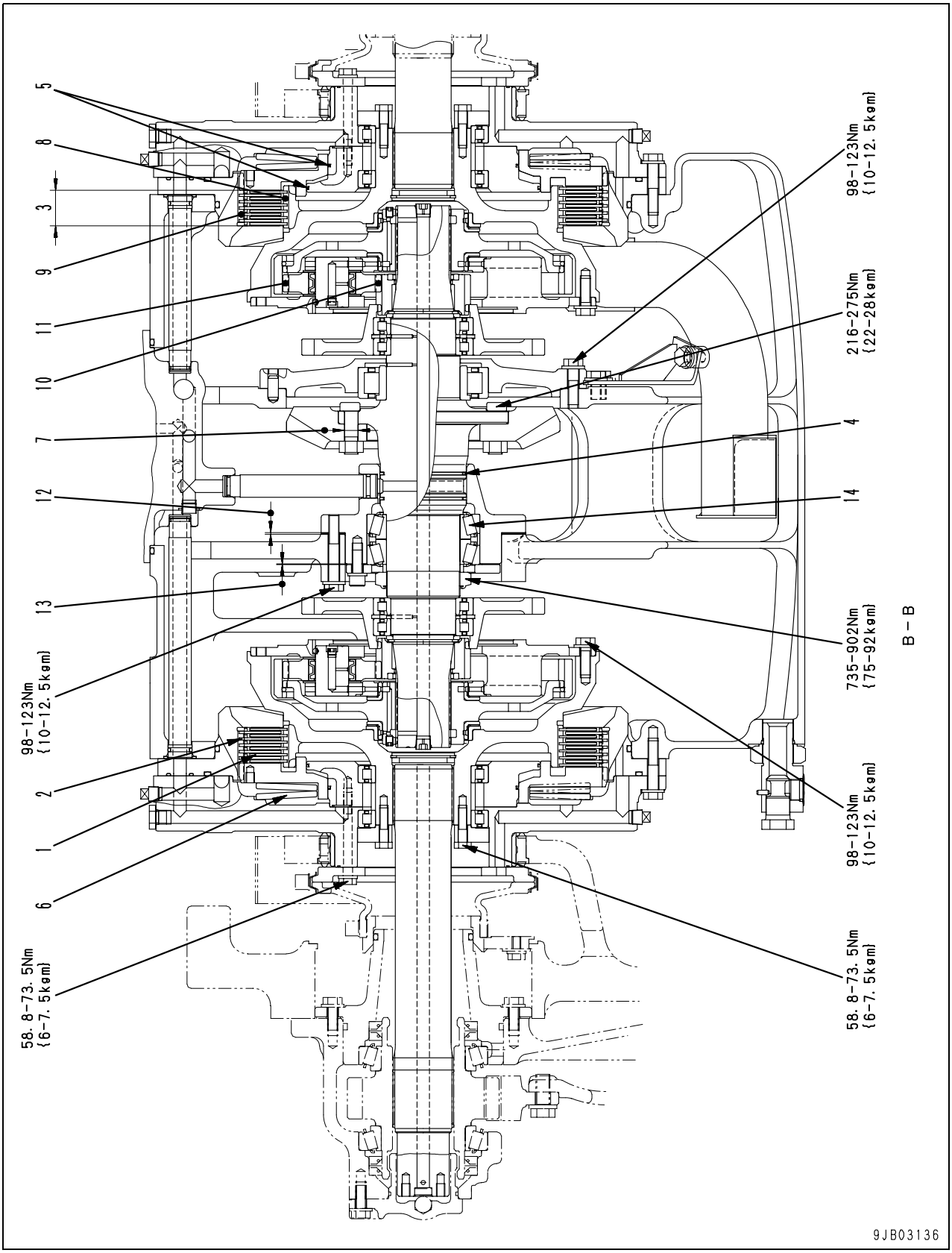
5
8
3
9
11
10
7
12
13
2
1
6
98-123Nm
{10-12.5kgm}
58.8-73.5Nm
{6-7.5kgm}
98-123Nm
{10-12.5kgm}
216-275Nm
{22-28kgm}
4
14
735-902Nm
{75-92kgm}
98-123Nm
{10-12.5kgm}
58.8-73.5Nm
{6-7.5kgm}
B - B
9JB03136

Unit: mm

No.	Check item		Criteria			Remedy
1	Brake disc		Standard size	Tolerance	Repair limit	Replace
		Thickness	4.5	±0.1	4.0	
		Strain	—	0.05	0.14	Repair or replace
2	Brake plate	Thickness	2.9	±0.1	2.6	Replace
		Strain	—	0.05	0.15	Repair or replace
3	Total assembled thickness of 6 plates and 5 discs		41.5	±0.33	38.3	Replace
4	Inner diameter of the seal ring contact surface of the retainer		100	+0.035 0	100.5	
	Wear of the bevel gear shaft seal ring	Width	3	–0.01 –0.03	2.7	
		Thickness	4	±0.12	3.85	
5	Inner diameter of the seal ring contact surface of the brake piston	Large diameter parts	280	+0.081 0	280.1	
		Small diameter parts	220	+0.072 0	220.1	

No.	Check item	Standard size			Repair limit		Remedy
6	Brake spring (2 pieces for 1 set)	Free length	Installation length	Installation load	Free length	Installation load	Replace
		33	19.6	35.7 kN {3,640 kg}	32.0	33.9 kN {3,460 kg}	

No.	Check item	Standard size	Tolerance		Standard clearance	Clearance limit	Remedy
7	Clearance between bevel gear and reamer bolt		Shaft	Hole			Replace
		16	+0.019 +0.001	+0.027 0	-0.019- 0.026	0.026	

No.	Check item	Criteria	Remedy
8	Backlash between the brake hub and the disc	0.23 – 0.42	Replace
9	Backlash between the brake drum and the plate	0.23 – 0.42	Replace
10	Backlash between sun gear and planetary pinion	0.17 – 0.52	Replace
11	Backlash between planetary pinion and ring gear	0.17 – 0.54	Replace
12	Standard shim thickness of the retainer	2.0	Adjust the shim
13	Standard shim thickness for plate	0.7	Adjust the shim
14	Preload of bevel gear shaft bearing A	Starting torque for no-loading: 2.94 Nm {0.3 kgm}	Adjust

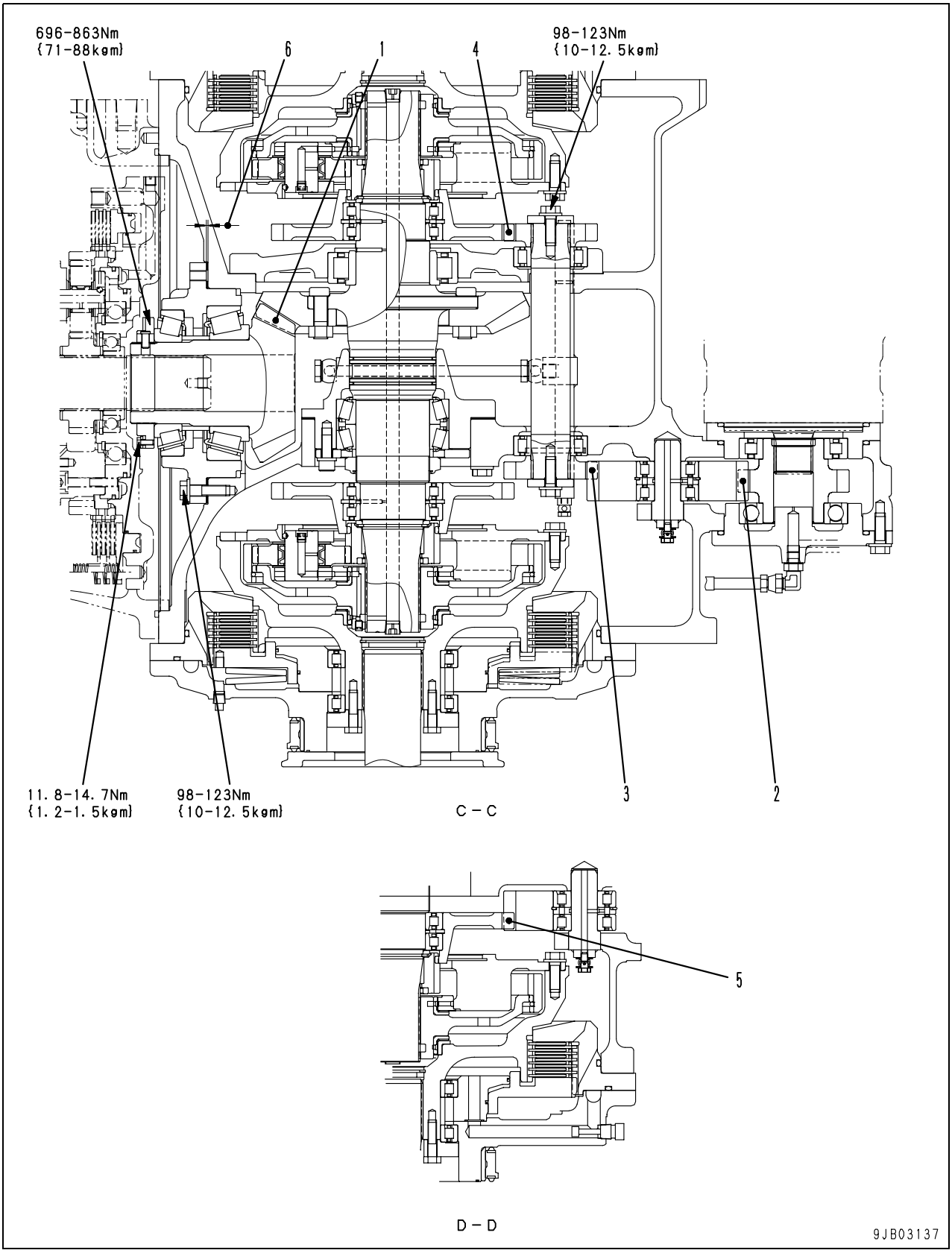
696-863Nm
{71-88kgm}
6
1
4
98-123Nm
{10-12.5kgm}
11.8-14.7Nm
{1.2-1.5kgm}
98-123Nm
{10-12.5kgm}
3
2
C - C
5
D - D
9JB03137

Unit: mm

No.	Check item	Criteria	Remedy
1	Backlash between bevel gear and bevel pinion	0.25 – 0.33	Adjust or replace
2	Backlash between drive gear and gear D	0.19 – 0.62	Replace
3	Backlash between gear D and gear C	0.18 – 0.58	
4	Backlash between gear B and gear A	0.19 – 0.61	
5	Backlash between gear D and gear A	0.20 – 0.67	
6	Standard shim thickness for cage	2.0	Adjust the shim

Operation of steering unit

When steering is at “Neutral“ (straight travel)

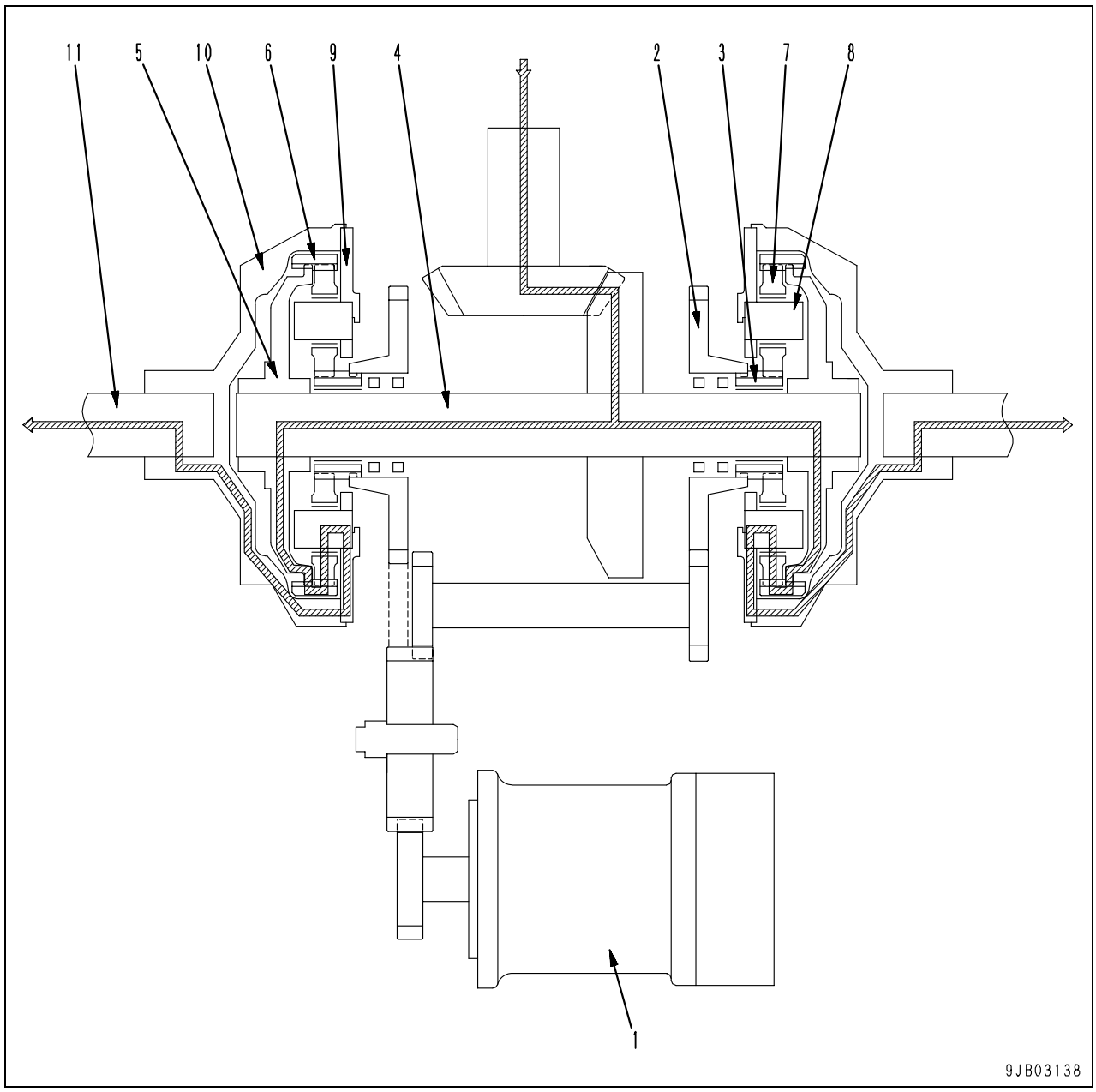

- When steering operation of PCCS lever is at “neutral“, left and right gear A (2) and sun gear (3) of transfer area and planet area do not rotate for HSS motor (1) is stopped.
- In this condition, the power transmitted to bevel gear shaft (4) is transmitted through hub (5) to ring gear (6).
- The power transmitted to ring gear (6) is transmitted to carrier (9) by passing through planetary pinion (7) to pinion shaft (8).
- The power transmitted to carrier (9) is transmitted through hub (10) to output shaft (11).
- Therefore, the number of output rotation of left and right becomes the same and the machine travels straight.

Rotation direction of HSS motor

PCCS lever steering operation	Neutral	Left turn			Right turn		
PCCS lever forward and reverse switching operation	Free, not specified	Neutral (*)	Forward	Reverse	Neutral (*)	Forward	Reverse
Rotation direction of HSS motor viewed from left side of machine	Stop	Left	Left	Right	Right	Right	Left

*: Counter-rotation

When steering operation is at “Left“ turn (forward travel)

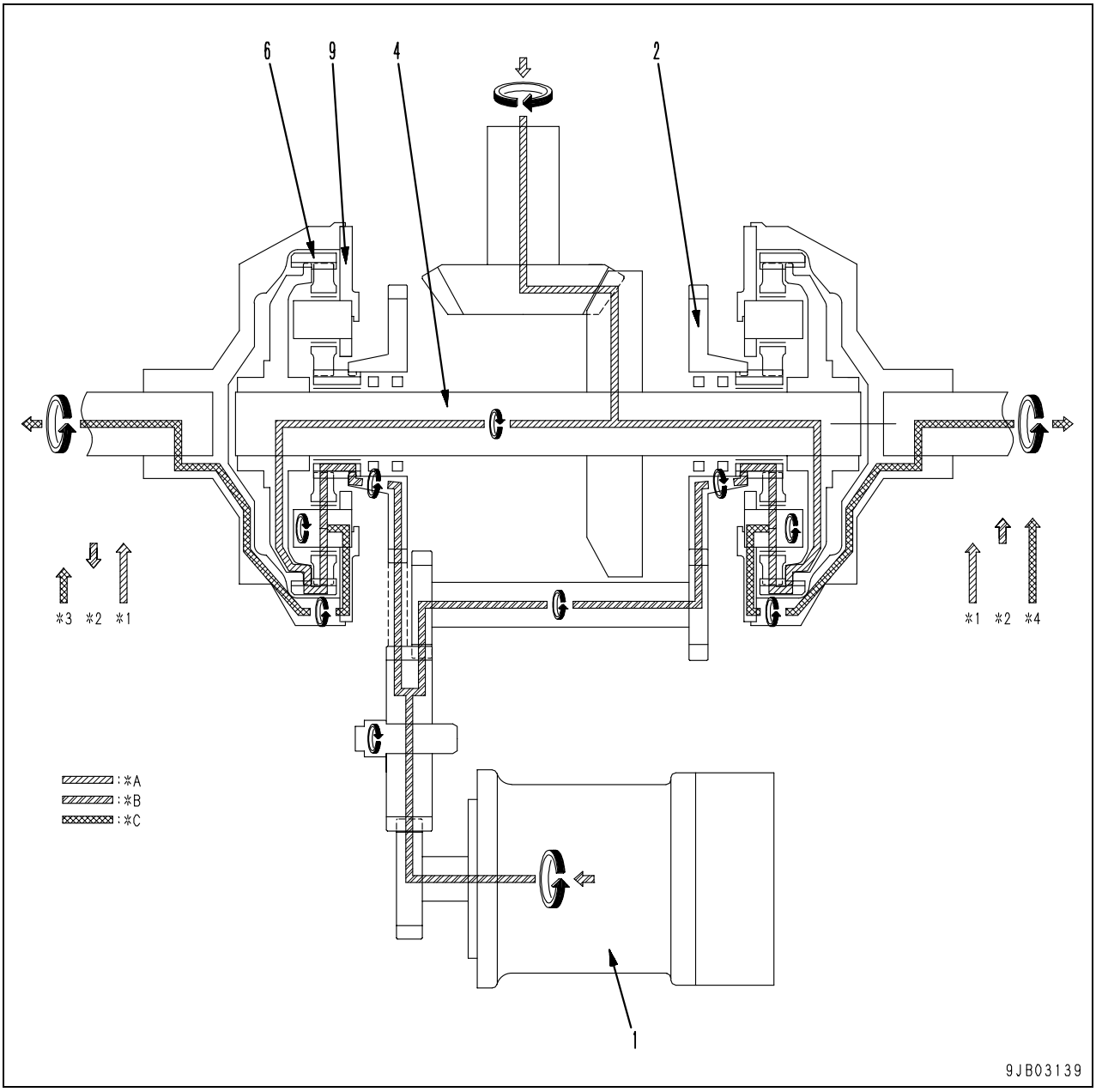

*A: Transmission output
*B: HSS motor output
*C: Combined output

*1. Transmission output speed
*2. HSS motor output speed
*3. Left bevel gear shaft output speed (*1-*2)
*4. Right bevel gear shaft output speed (*1+*2)

- If PCCS lever shifts the steering operation into “left turn“ when traveling forward; HSS motor (1) rotates in left direction, left side gear A (2) rotates in left direction, and right side gear A (2) rotates in right direction, viewing from the left side of the machine body.
- Also, bevel gear shaft (4) and ring gear (6) linked to the shaft rotate in right direction, viewing from the left side of the machine body.
- Accordingly, considering the rotation number at left and right planet area, that of left side carrier (9) slows down with the output of HSS motor, and that of right side carrier (9) increases its speed, compared to that of straight forward. Therefore, the machine travels to the left direction whose output rotation number is smaller.

When steering operation is at “Left“ turn (reverse travel)

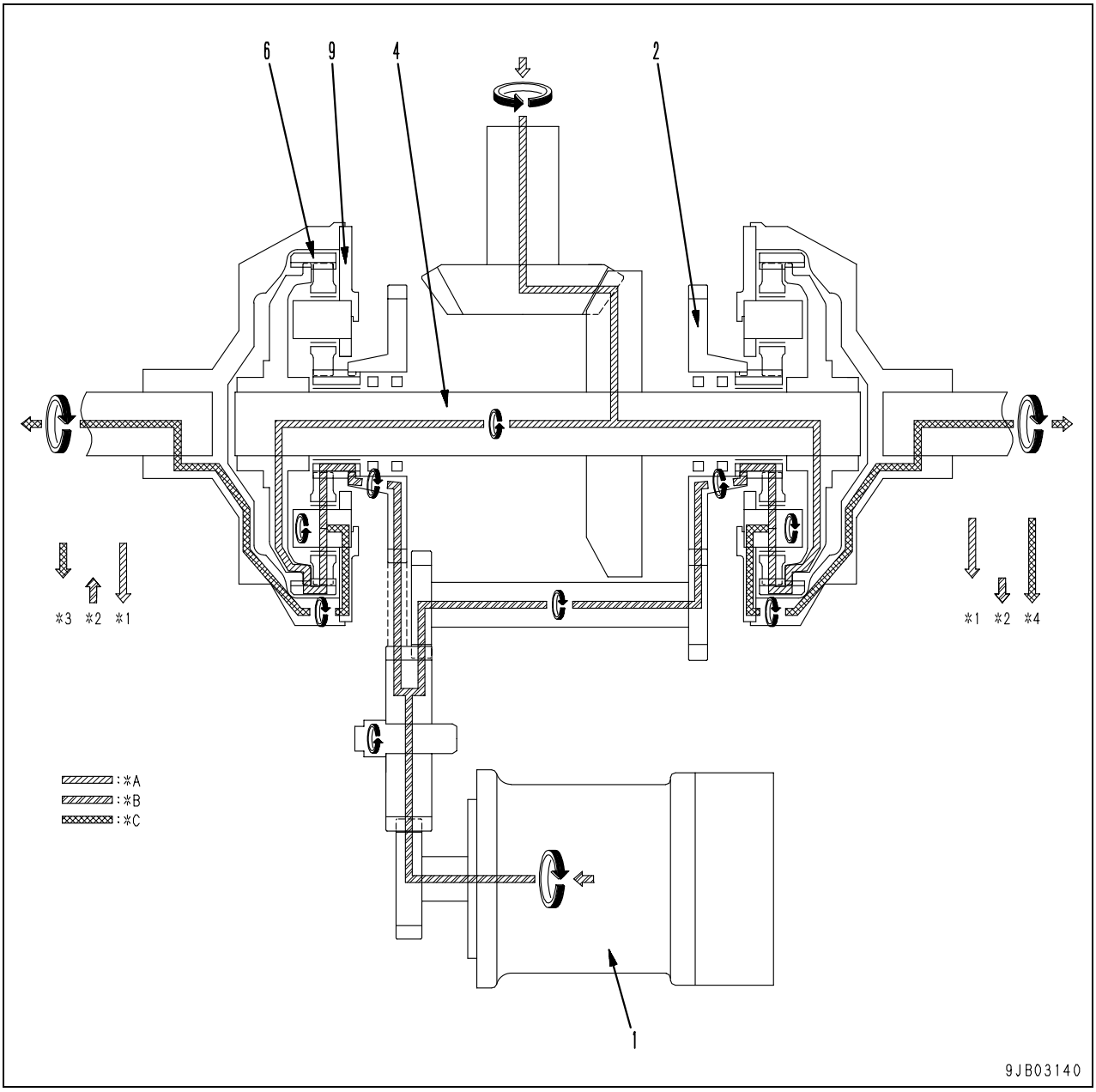

*A: Transmission output
*B: HSS motor output
*C: Combined output

*1. Transmission output speed
*2. HSS motor output speed
*3. Left bevel gear shaft output speed (*1-*2)
*4. Right bevel gear shaft output speed (*1+*2)

- If PCCS lever shifts the steering operation into “left turn“ when traveling reverse; HSS motor (1) rotates in right direction, left side gear A (2) rotates in right direction, and right side gear A (2) rotates in left direction, viewing from the left side of the machine body.
- Also bevel gear shaft (4) and other ring gear (6) linked to the shaft rotate in left direction, viewing from the left side of the machine body.
- Accordingly, considering the rotation number at left and right planet area, that of left side carrier (9) slows down with the output of HSS motor, and that of right side carrier (9) increases its speed, compared to that of straight reverse. Therefore, the machine travels in reverse to the left direction whose output rotation number is smaller.

When steering operation is at “Right“ turn (forward travel)

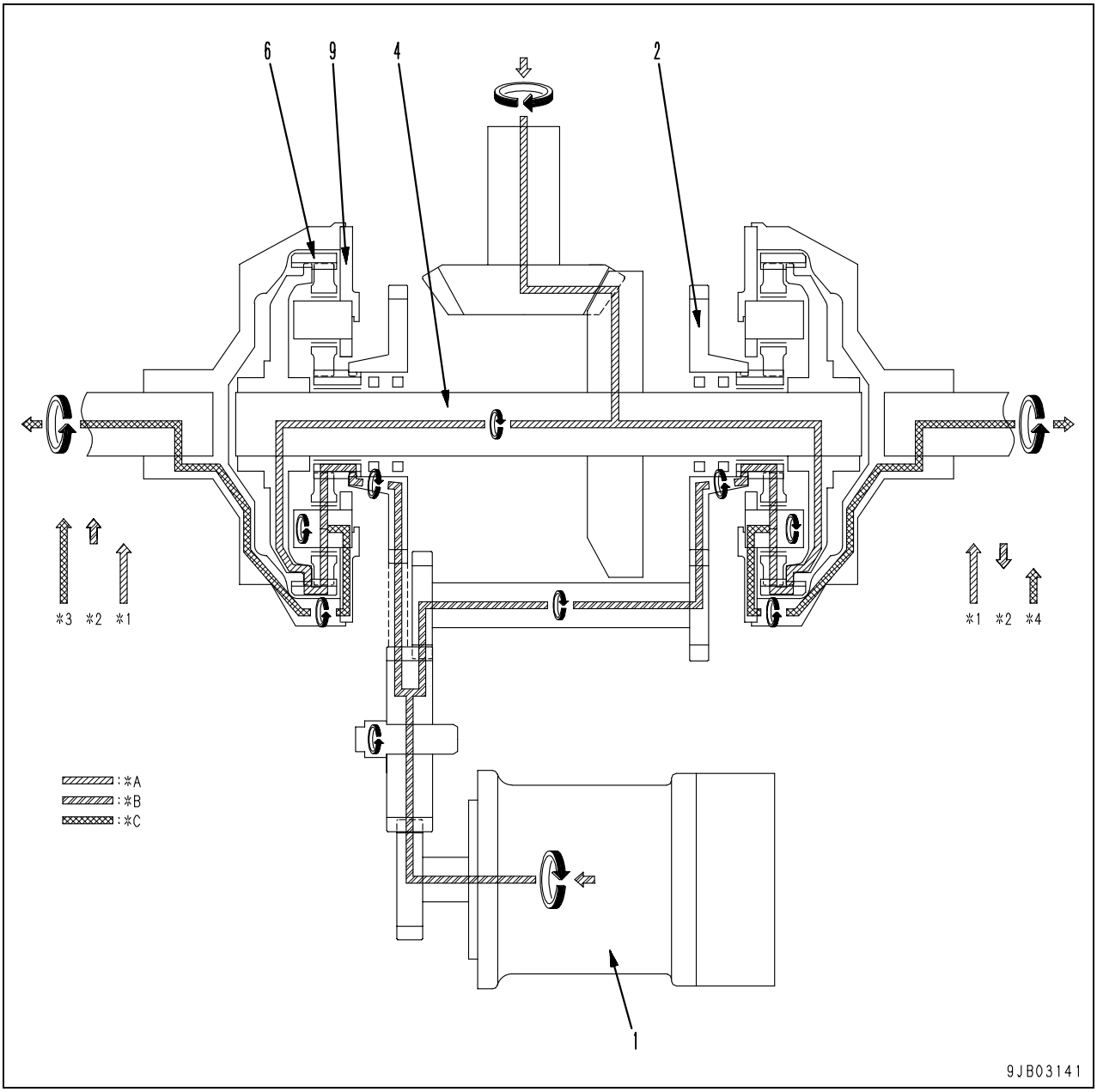

*A: Transmission output
*B: HSS motor output
*C: Combined output

*1. Transmission output speed
*2. HSS motor output speed
*3. Left bevel gear shaft output speed (*1+*2)
*4. Right bevel gear shaft output speed (*1-*2)

- When steering operation of PCCS lever is at “right turn“ while traveling forward, HSS motor (1) rotates in right direction, left side gear A (2) rotates in right direction, and right side gear A (2) rotates in left direction, viewing from the left side of the machine body.
- Also, bevel gear shaft (4) and ring gear (6) linked to the shaft rotate in right direction, viewing from the left side of the machine body.
- Accordingly, considering the rotation number at left and right planet area, that of left side carrier (9) increases its speed with the output of HSS motor, and that of right side carrier (9) slows down, compared to that of straight forward travel. Therefore, the machine will travel to the right direction whose output rotation number is smaller.

When steering operation is at “Right“ turn (reverse travel)

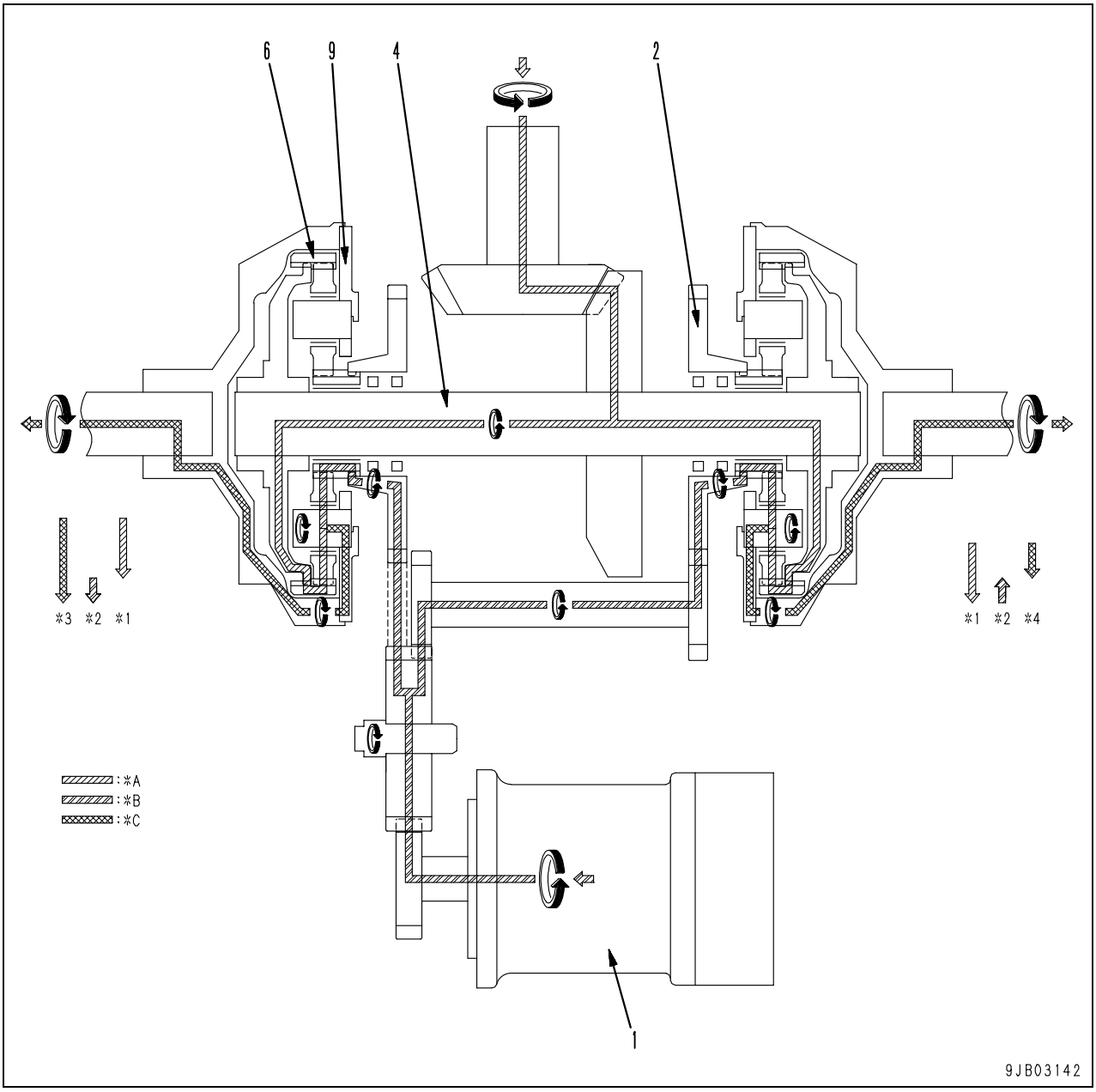

*A: Transmission output
*B: HSS motor output
*C: Combined output

*1. Transmission output speed
*2. HSS motor output speed
*3. Left bevel gear shaft output speed (*1+*2)
*4. Right bevel gear shaft output speed (*1-*2)

- If PCCS lever shifts the steering operation into “right-turn“ when traveling reverse; HSS motor (1) rotates in left direction, left side gear A (2) rotates in left direction, and right side gear A (2) rotates in right direction, viewing from the left side of the machine body.
- Also bevel gear shaft (4) and other ring gear (6) linked to the shaft rotate in left direction, viewing from the left side of the machine body.
- Accordingly, considering the rotation number at left and right planet area, that of left side carrier (9) increase its speed with the output of HSS motor, and that of right side carrier (9) slows down, compared to that of straight reverse. Therefore, the machine travels in reverse and turns to the right direction whose output rotation number is smaller.

Brake operation

When the brake is “released“

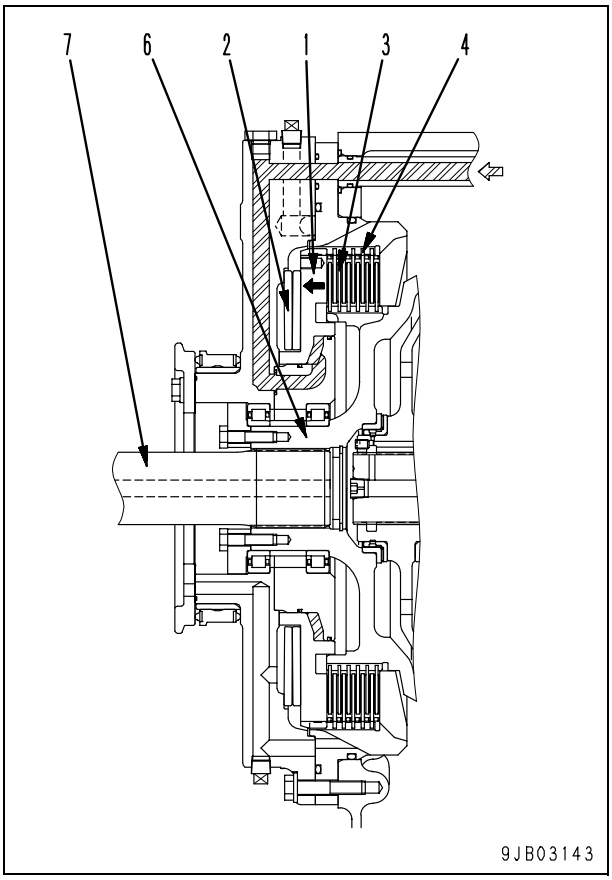

- When the PCCS lever is in the “neutral“ position and the brake pedal is released, the maximum brake pressure is applied to the back of brake piston (1) by the brake control valve.
- As the oil pressure rises, brake piston (1) compresses brake spring (2) and moves to the left to eliminate the pressing force between discs (3) and plates (4).
- The power transmitted from bevel gear shaft through HSS to brake hub (6) is transmitted to output shaft (7), then to the final drive.

When the brake is “applied“

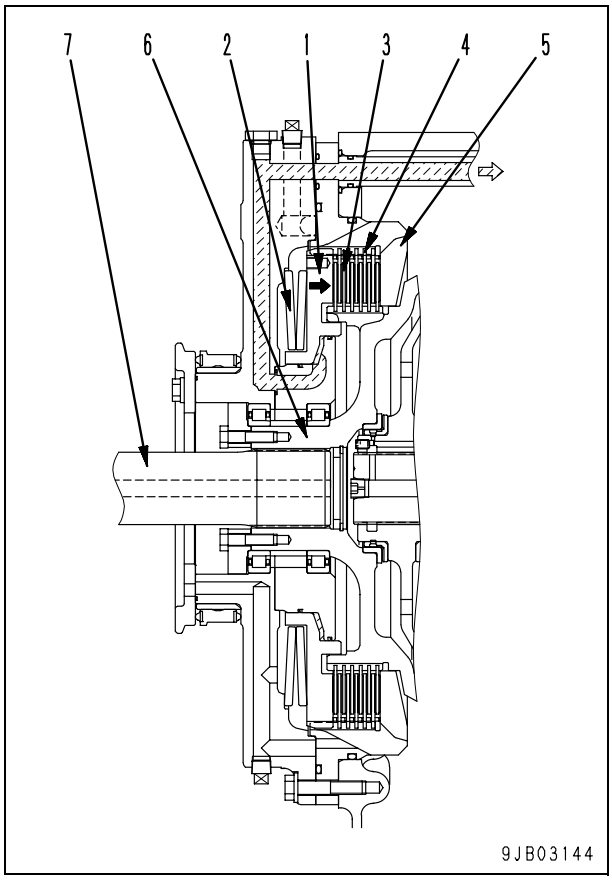

- If the brake pedal is depressed, the brake pressure applied to the back of brake piston (1) starts to lower by the brake control valve.
- At this time, brake piston (1) is pushed back to the right by the tension of the brake spring (2) to press discs (3) and plates (4) against brake drum (5).Brake drum (5) is fixed to the steering case.
- Power towards brake hub (6) or output shaft (7) is controlled by compressing disc (3) and plate (4).
- The brake force can be adjusted by controlling the oil pressure applied to the back side of brake piston (1) according to the stroke of the brake pedal.

Brake control valve

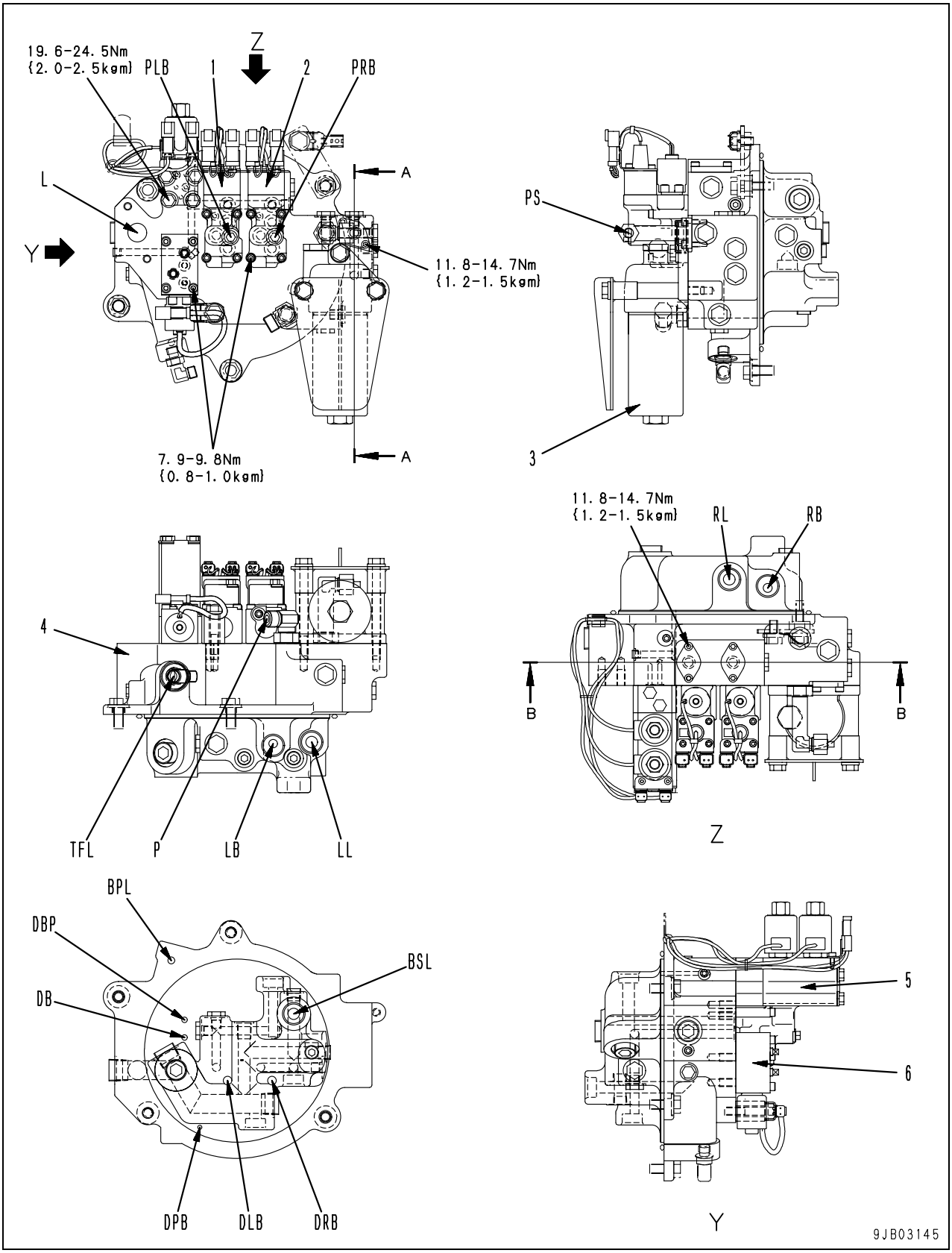

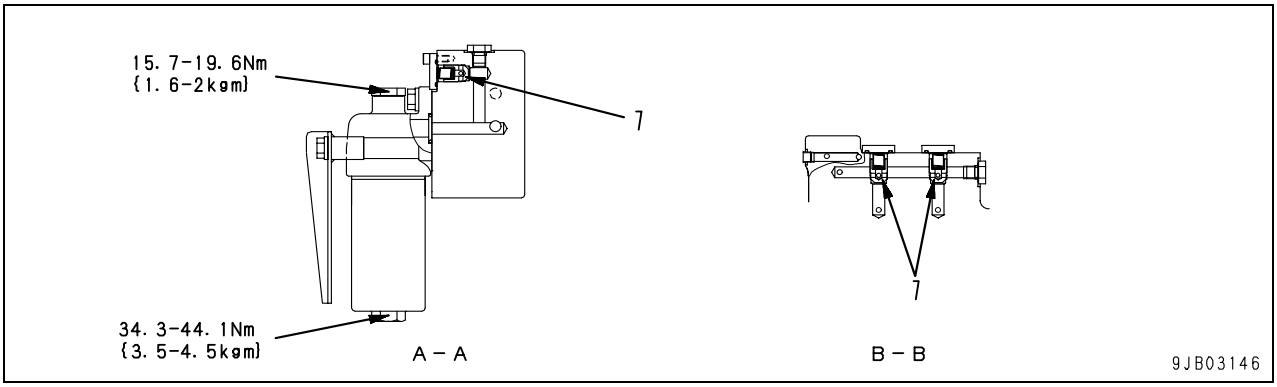

P: From power train pump
L: From scavenging pump, steering lubrication pump
PS: To the pin puller solenoid valve
LB: To left brake
LL: To left brake lubrication circuit
RB: To right brake
RL: To right brake lubrication circuit
BSL: To bevel gear shaft and planet area bearing lubrication circuit
BPL: To the bevel pinion bearing lubrication circuit
TFL: To HSS transfer area lubrication circuit
DLB: Drain (L.H. brake)
DRB: Drain (R.H. brake)
DB: Drain (Sudden stop prevention valve)
DBP: Drain (Sudden stop prevention valve pilot)
DPB: Drain (Parking brake)
PLB: Left brake oil pressure pickup port
PRB: Right brake oil pressure pickup port

1. L.H. brake ECMV
2. R.H. brake ECMV
3. Steering oil filter
4. Valve seat
5. Parking brake solenoid valve
6. Sudden stop prevention valve
7. Check valve

Outline

- The brake control valve consists of 2 ECMVs, parking brake solenoid valve and the sudden stop prevention valve installed on the valve seat, to control the brake.
- The brake control valve is located in the circuit between the power train pump and the brake piston, and consists of 2 sets of brake ECMV (L.H. and R.H.).
- The brake control valve sends the oil from the power train pump to the brake to control left-and-right disc clutches.
- The controller sends signals to each ECMV according to the right or left stroke of the PCCS lever and adjusts the gradual or sharp turns.
- If the brake pedal is depressed, the controller sends commands to the brake ECMV according to the pedal stroke to apply the L.H. and R.H. brake, thus stopping the machine.
- The controller, connected electrically to the PCCS lever and the brake pedal operates the brake by controlling each ECMV and solenoid valve.
- The sudden stop prevention valve is installed to prevent the machine from stopping suddenly, when an abnormality takes place in the electric system.
- When the parking brake lever is set in the “lock“ position, the controller sends signals to the parking brake solenoid valve to drain the oil between the L.H. and R.H. brake ECMV and the brake pistons to operate the brake. Also the parking brake solenoid valve is connected electrically to the brake pedal.

Brake ECMV

★ ECMV: Abbreviation for Electronic Control Modulation Valve
★ Don't try to disassemble it since adjustment for maintaining the performance will be needed.

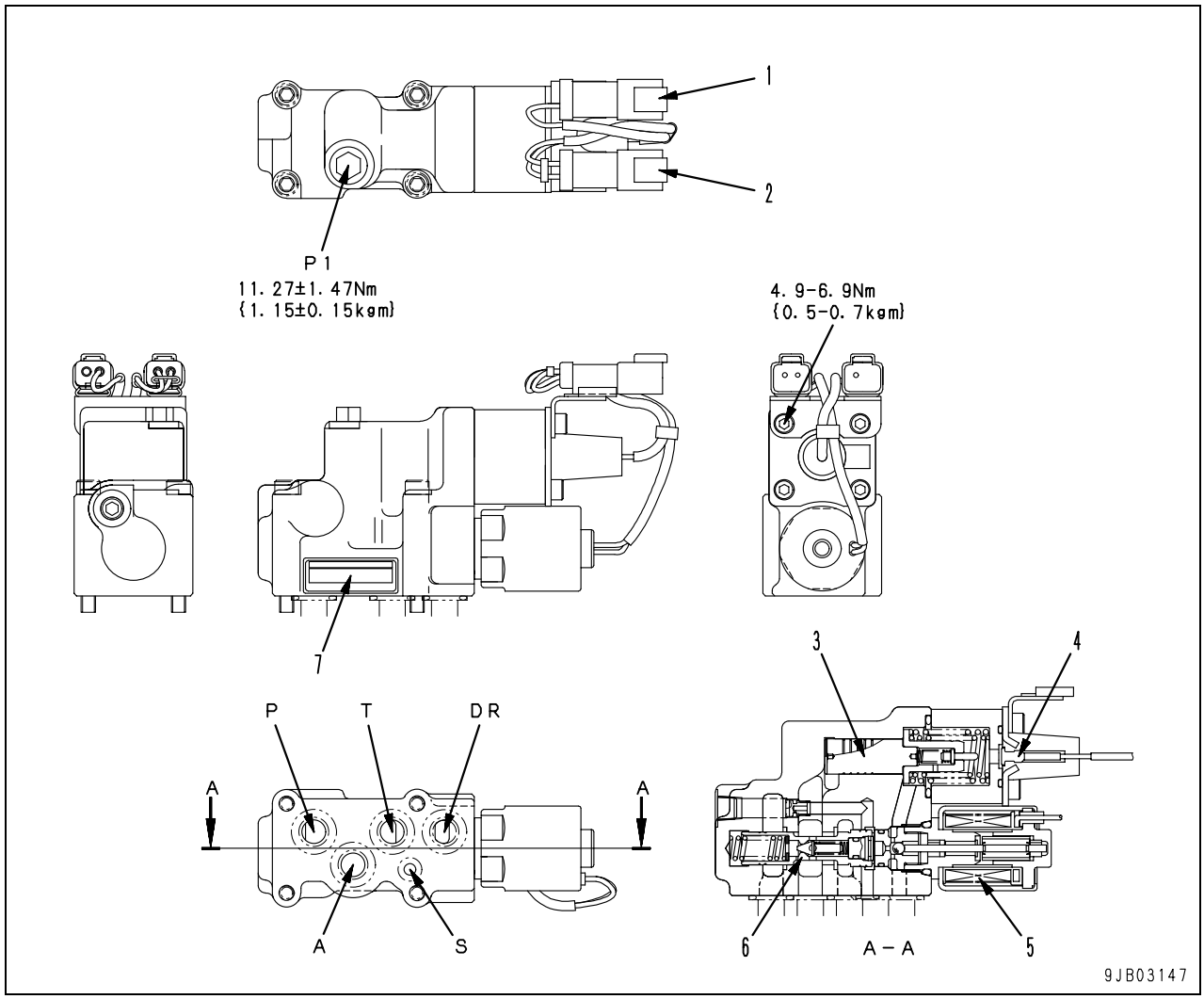

A: To brake
P: From pump
S: To parking brake solenoid valve
T: Drain
DR: Drain
P1: Brake oil pressure pickup port

1. Fill switch connector
2. Proportional solenoid connector
3. Pressure detection valve
4. Fill switch
5. Proportional solenoid
6. Pressure control valve
7. Nameplate (*1)

*1:

Operated clutches	Stamp of the nameplates
Brake	R*******

Outline

- The brake ECMV keeps the brake oil pressure to the set pressure and furthermore changes the circuit to the piston chamber of brake.

Outline of ECMV

- The ECMV consists of 1 pressure control valve and 1 fill switch.
- **Pressure control valve**
  A proportional solenoid in this valve receives a current sent from the controller and this valve converts it to an oil pressure.
- **Fill switch**
  This is a switch to detect that a clutch or brake is filled with oil and has the following functions.

1. At the moment when the clutch or brake is filled with oil, the fill switch outputs the signal (fill signal) to the controller to notify the finishing of filling.
2. While the oil pressure is applied to the clutch or brake, the fill switch outputs the signal (fill signal) to the controller to notify the presence of the oil pressure.

ECMV and proportional solenoid

- One proportional solenoid is mounted for each ECMV.
  The propulsion force is generated according to the command current from the controller.
  The propulsion force generated by the proportional solenoid is actuated on the spool of the pressure control valve and generates the oil pressure. Accordingly, by controlling the amount of the command current, the propulsion force changes and the pressure control valve is actuated, then the oil flow and oil pressure is controlled.

ECMV and fill switch

- For each ECMV, 1 fill switch is installed.
  If the clutch is filled with oil, the fill switch is turned “ON“ by the pressure of the clutch. The oil pressure is built up according to this signal.

Operation of ECMV

- The ECMV is controlled by the command current from the controller to the proportional solenoid and the fill switch output signal.

When the PCCS lever is in “neutral“ position, brake pedal is “released“, and parking brake lever is in “free“ position: Straight travel
(L.H. and R.H. brake are“released“, parking brake is“released“)

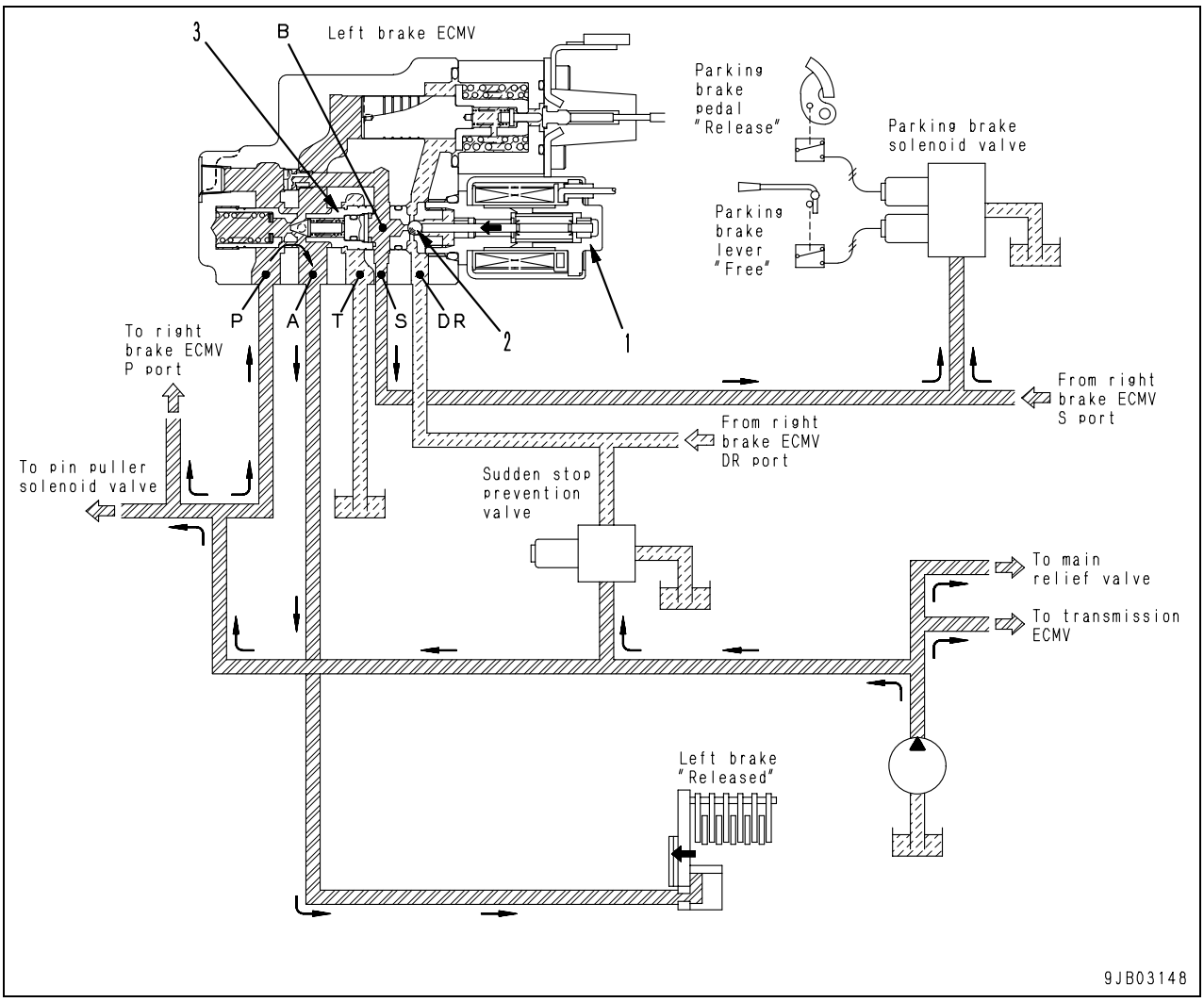

- When the PCCS lever is in “neutral“ position and the brake pedal is “released“, proportional solenoid (1) of the brake ECMV is energized and pushes ball (2) to the left and closes the sealing part.
- The oil in port (P) of the brake ECMV flows in chamber (B) and pushes valve (3) to the left to connect port (P) with port (A) and disconnect chamber (B) from port (DR).At this time, the oil flows in the back pressure port of the brake piston. As the oil pressure rises, the brake piston is pushed to the left to compress the brake spring, then the brake is “released“.
- When the parking brake lever is set in the “free“ position, the pilot pressure of brake ECMV port (S) remains, because the parking brake solenoid valve is de-energized.

When the PCCS lever is “operated to the left halfway“, brake pedal is “released“, and parking brake lever is in “free“ position: Gradual left turn
(L.H. brake is “half released“, R.H. brake is “released“, parking brake is “released“)

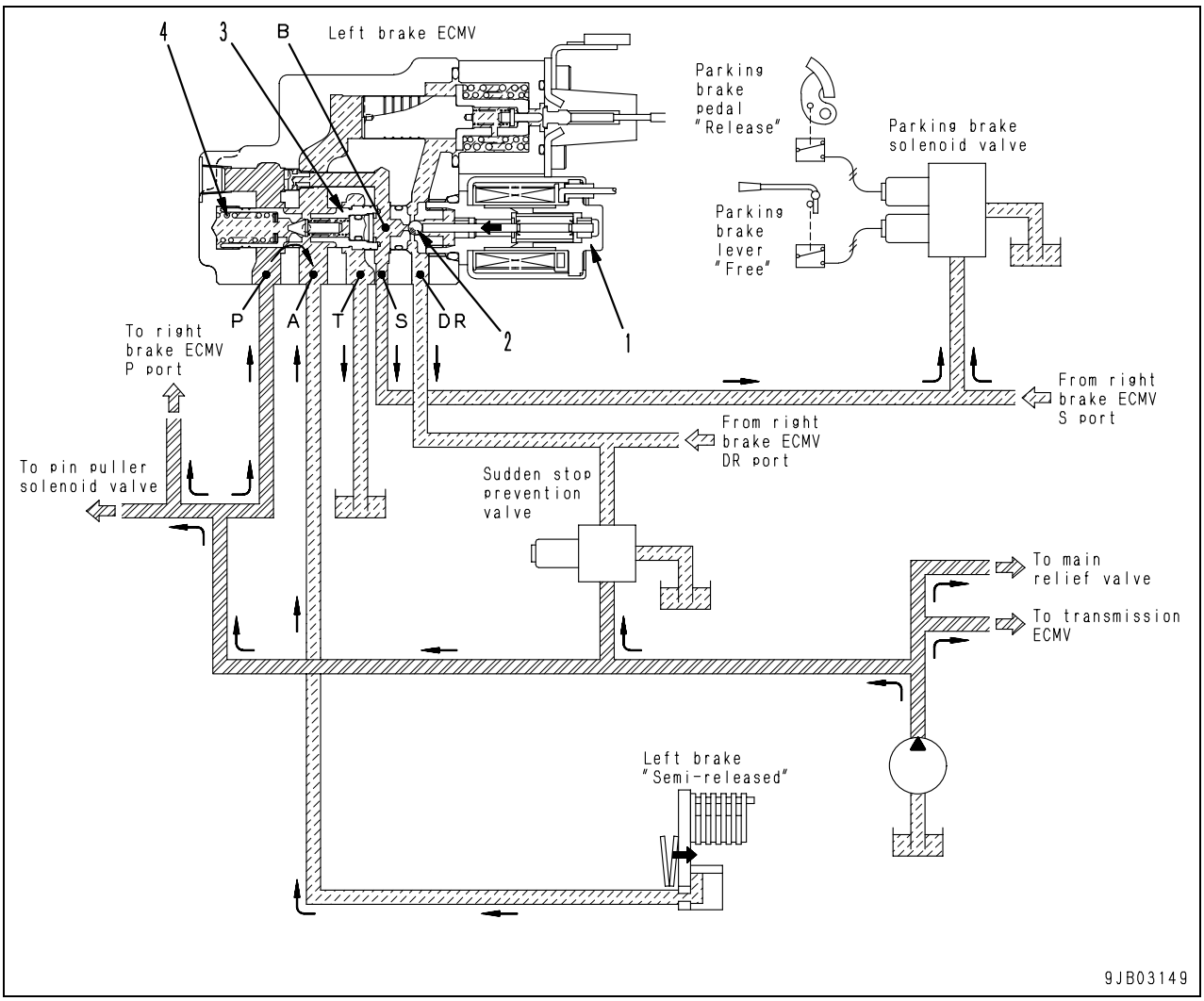

- When the PCCS lever is in “operated to the left halfway“ position and the brake pedal is “released“, proportional solenoid (1) of the brake ECMV is energized and pushes ball (2) to the left and closes the sealing part.
- The oil in port (P) of the brake ECMV flows in chamber (B) and pushes valve (3) to the left.As for the oil pressure after port (A), the controller outputs the command current to proportional solenoid (1) according to the stroke of the PCCS lever.
- Proportional solenoid (1) generates the propulsion force in proportion to the command current. This propulsion force is balanced with the sum of the propulsion force generated by the oil pressure in the back pressure port of the brake piston and the tension of spring (4), then the brake pressure is set up to adjust the brake force.
- Accordingly, if the stroke of the PCCS lever is short, the oil pressure after port (A) is set high and the brake is turned from “released“ to “half released“. If the stroke of the PCCS lever is long, the oil pressure after port (A) is set low and the brake is turned from “half released“ to “applied“.
- When the parking brake lever is set in the “free“ position, the pilot pressure of brake ECMV port (S) remains, because the parking brake solenoid valve is de-energized.

When the PCCS lever is in “neutral“, brake pedal is “depressed“, and parking brake lever is in “free“ position: Stop
(L.H. and R.H. brake are “operated“, parking brake is “released“)

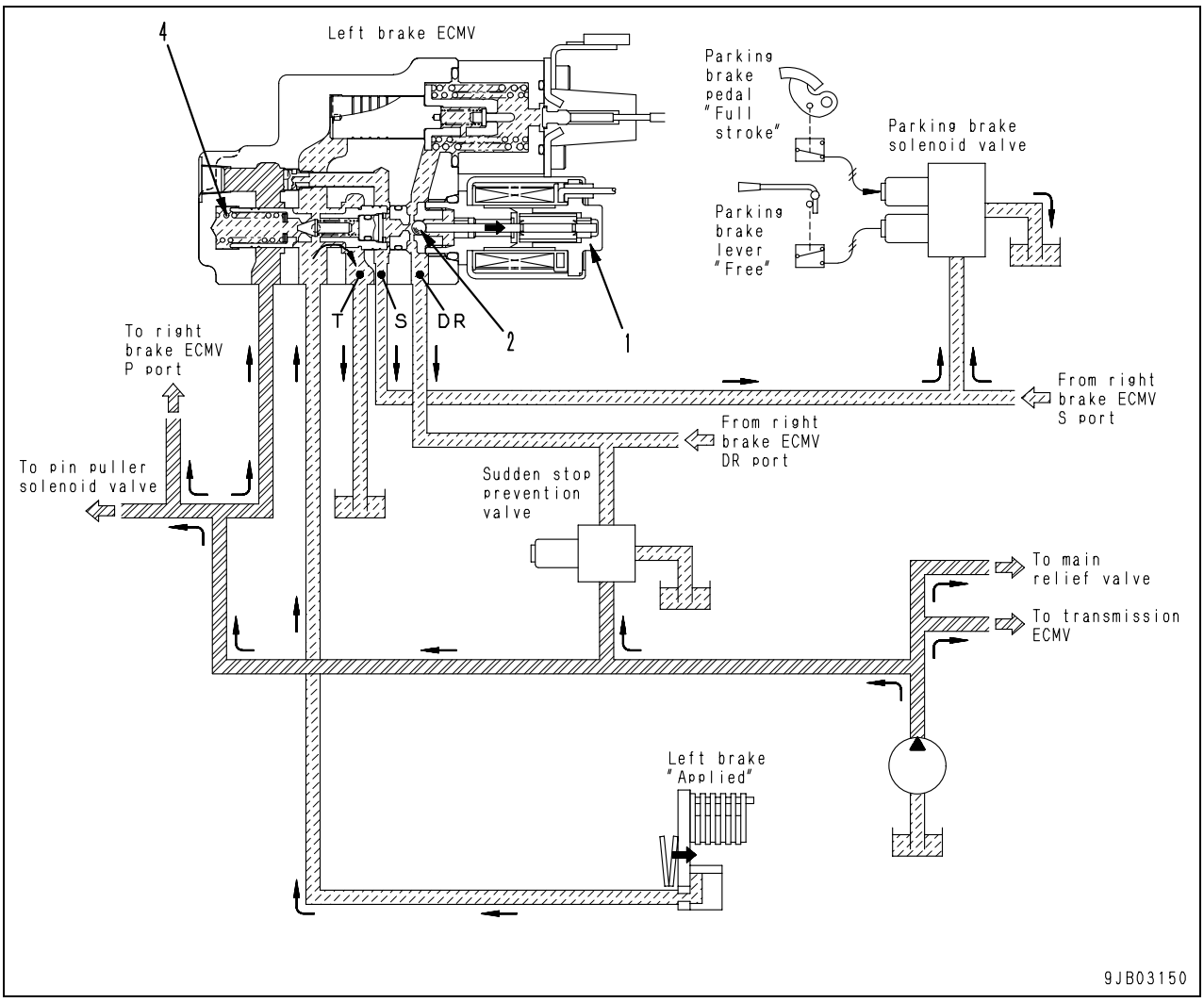

- When the brake pedal is depressed, proportional solenoids (1) of L.H. and R.H. brake ECMV are de-energized to open the sealing part of ball (2).
- The controller outputs the command current to proportional solenoids (1) according to the brake pedal stroke.
- Proportional solenoid (1) generates the propulsion force in proportion to the command current. This propulsion force is balanced with the sum of the propulsion force generated by the oil pressure in the back pressure port of the brake piston and the tension of spring (4), then the brake pressure is set up to adjust the brake force.
- When the brake pedal is depressed fully, the brake pedal switch is turned “ON“, and the parking brake solenoid valve is energized to drain the pilot pressure of the brake ECMV port (S).This carries out the same function as when the parking brake lever is set at the “lock“ position.

Parking brake solenoid valve

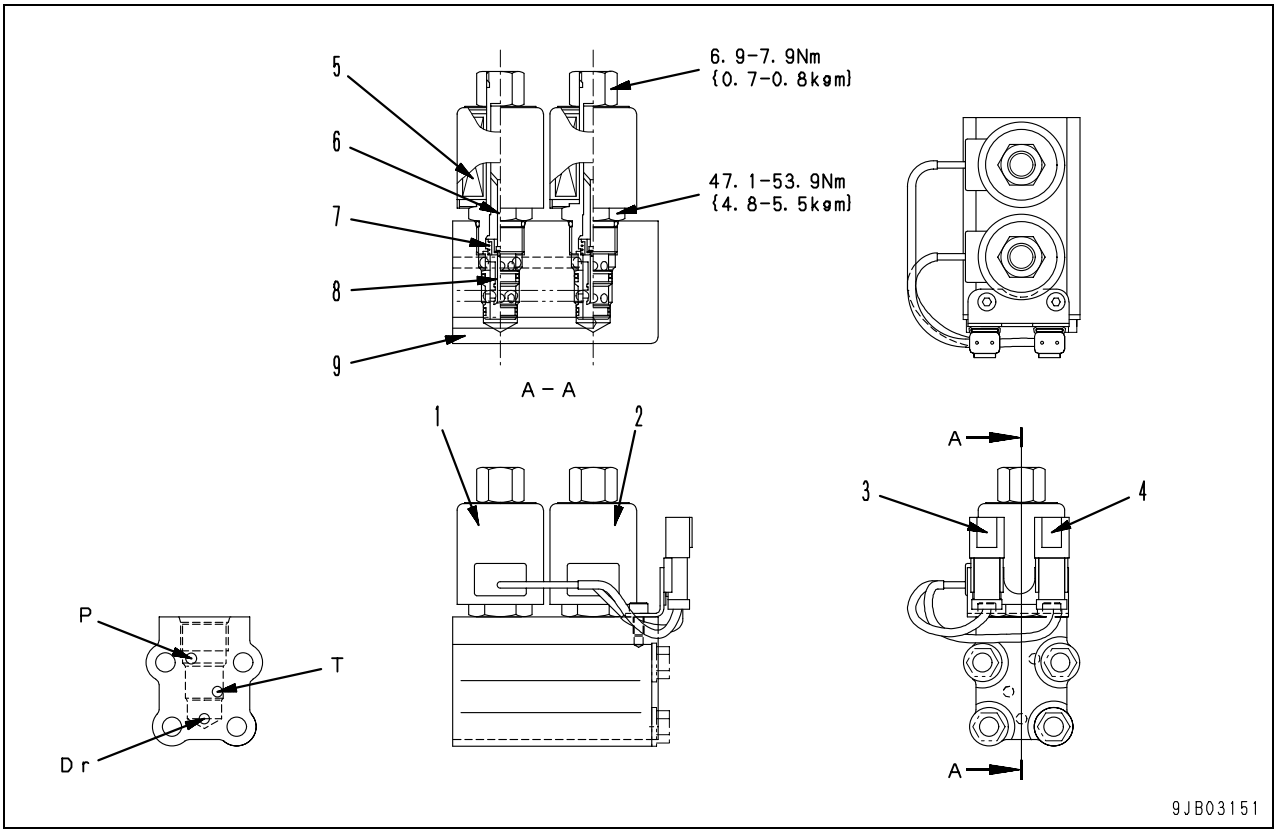

P: From brake ECMV
T: Drain
Dr: Drain

1. Parking brake lever solenoid valve
2. Brake pedal solenoid valve
3. Connector for parking brake lever solenoid valve
4. Connector for brake pedal solenoid valve

Solenoid valve

5. Coil (ON-OFF type)
6. Push pin
7. Spring
8. Spool
9. Body

When PCCS lever is in “neutral“ position, brake pedal is “released“, and parking brake lever is in“lock“ position : Parking
(L.H. and R.H. brake are “operated“, parking brake is “operated“)

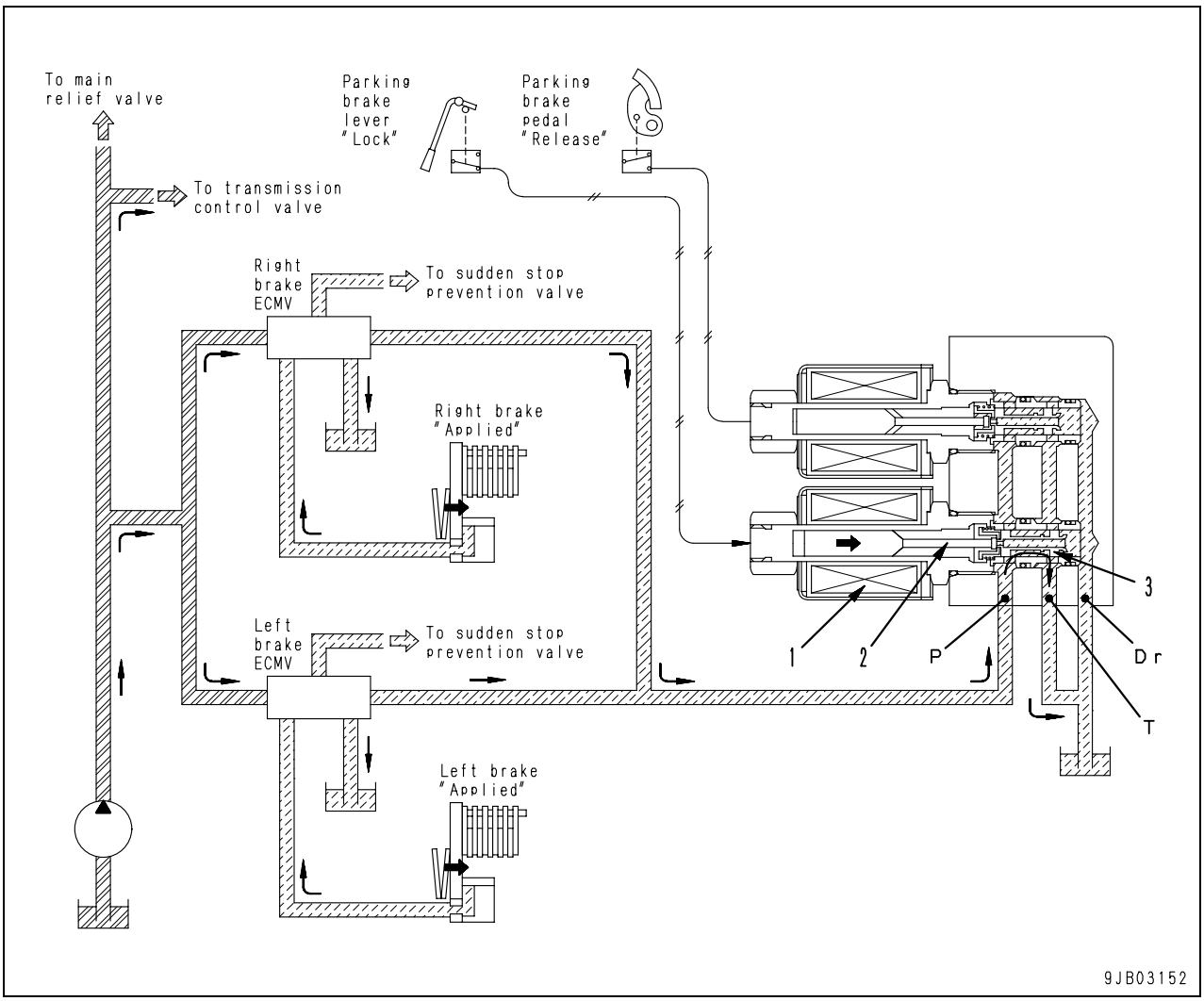

- When the parking brake lever is in the “lock“ position, the parking brake lever switch is turned “ON“ and coil (1) of the parking brake solenoid valve is energized.
- Spool (3) is pushed to the right direction by push pin (2), then port (P) and (T) are opened to drain the pilot pressure of the L.H. and R.H. brake ECMV.
- The oil which had flown into the brake piston back pressure port is drained through the brake ECMV.
- The oil pressure in the back pressure port of the brake piston continues to decrease, then the brake is fully “applied“ and that situation is kept.
- When the engine is started again, as port (P) and (T) are still opened, the brake is continuously “applied“.
- When the parking brake lever is in the “free“ position, the parking brake lever switch is “OFF“ and coil (1) of the parking brake solenoid valve is de-energized.
- Spool (3) is returned to the left, and close port (P) and (T) to remain the pilot pressure of the L.H. and R.H. brake ECMV.
- The oil pressure from the brake ECMV is applied to the back pressure port of the brake piston, and brake is “released“.

Sudden stop prevention valve

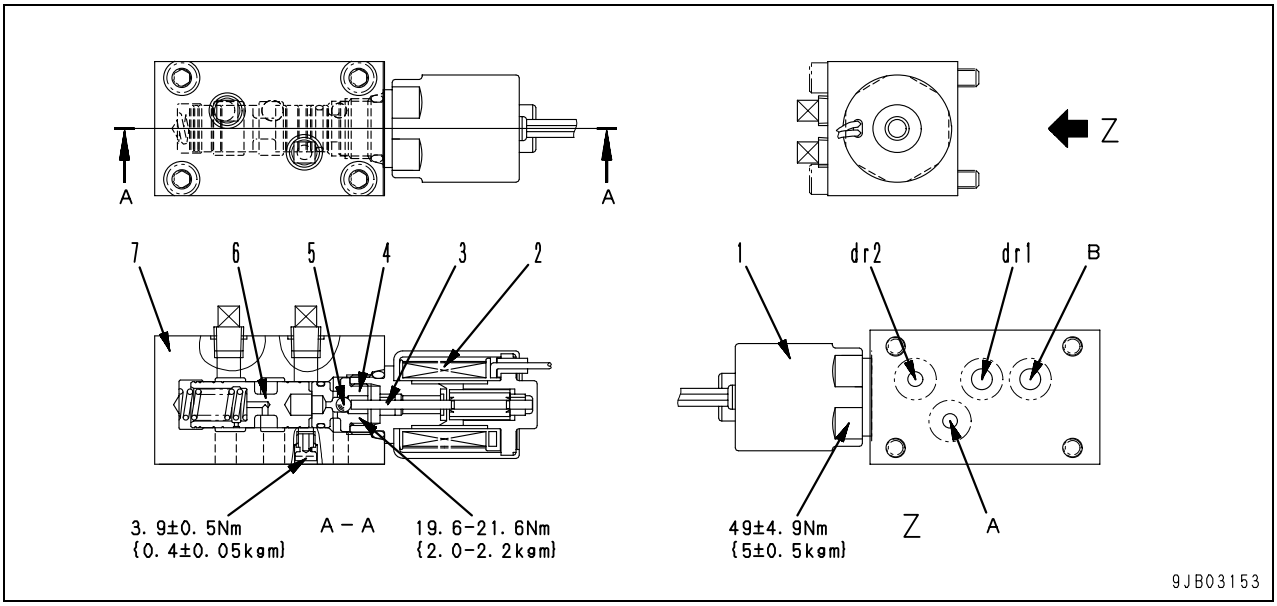

A: From power train pump
B: From brake ECMV
dr1: Drain
dr2: Drain

1. Sudden stop prevention valve

EPC valve

2. Coil (proportional type)
3. Push pin
4. Valve
5. Ball
6. Spool
7. Body

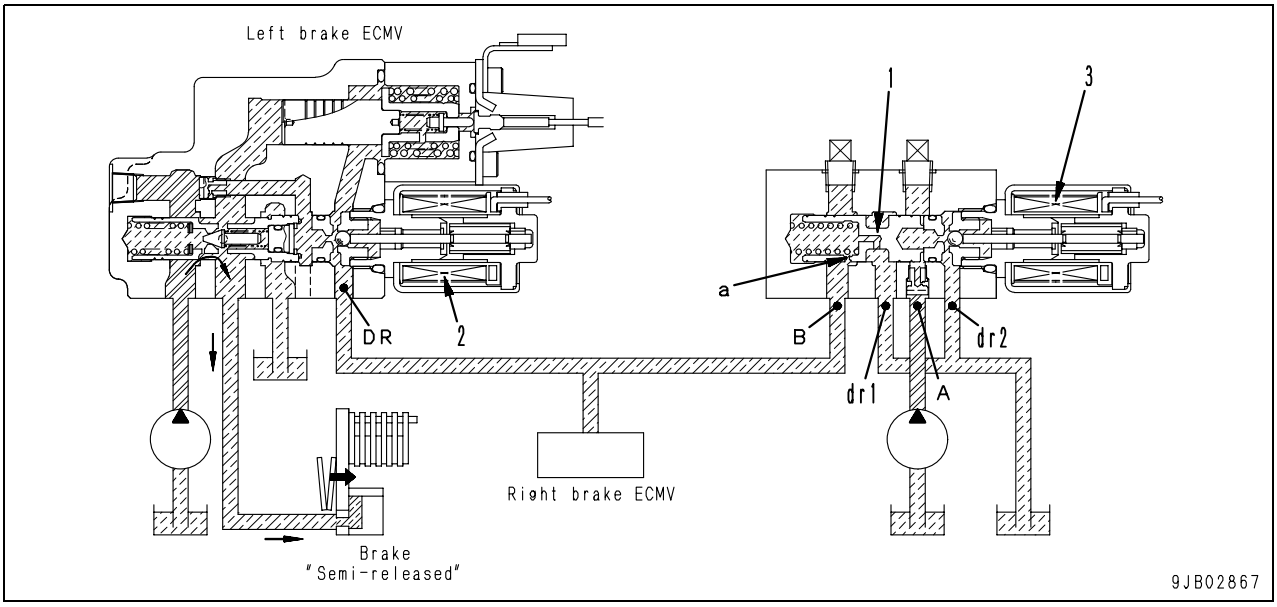

Outline

- The sudden stop prevention valve is installed to prevent the machine from stopping suddenly when an abnormality takes place in the electric system.
- Sudden stop prevention valve (1) is installed in the drain circuit of the brake ECMV so that the sudden oil pressure drop of port (DR) and consequently the sudden brake can be avoided when coil (2) of brake ECMV is de-energized.
- If an abnormality takes place in the electric system, also coil (3) of the sudden stop prevention valve (1) is de-energized. Then, the oil of port (DR) is drained through orifice (a) so that the brake is applied gradually.

Final drive

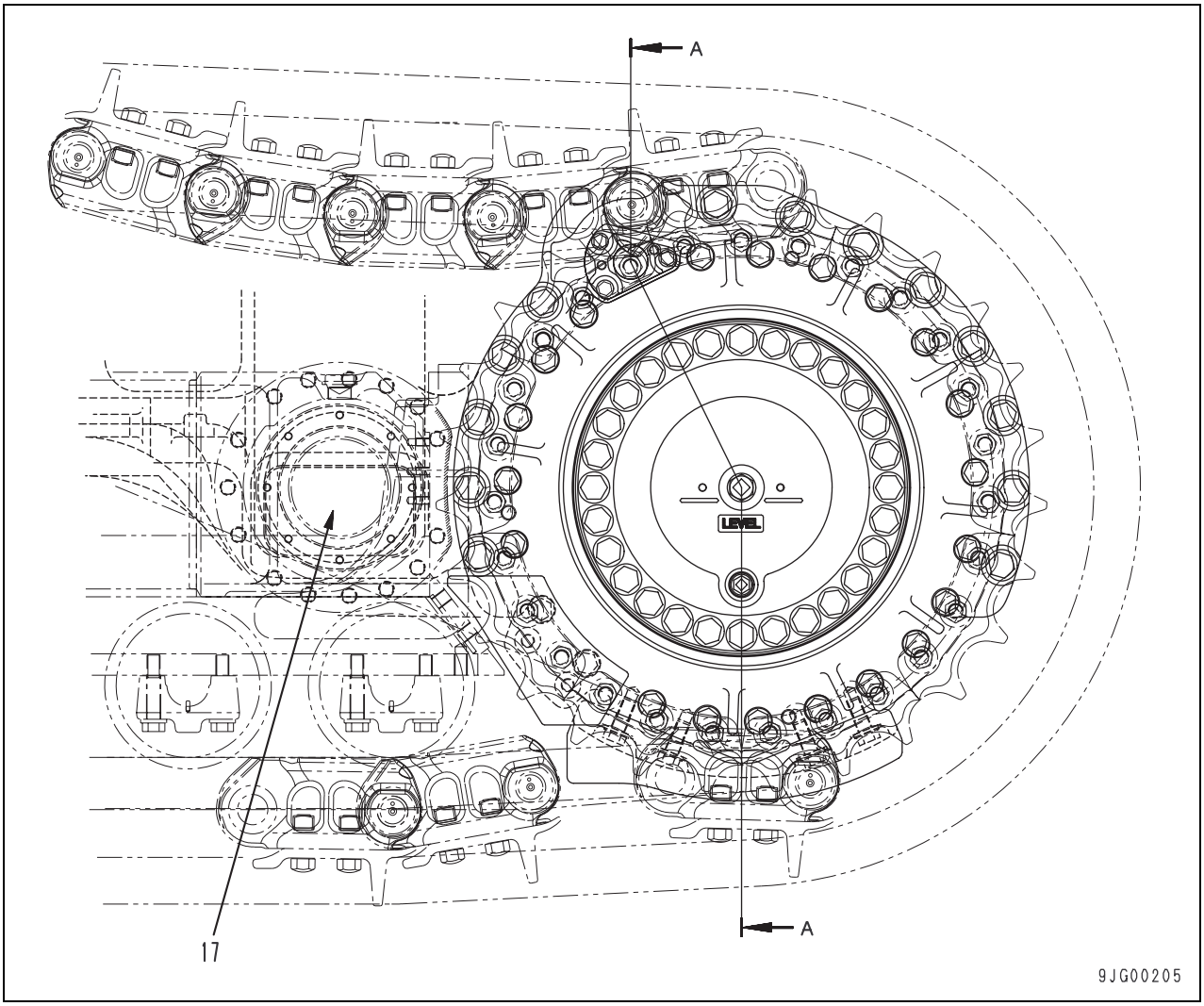

Outline

- The final drive is a single stage spur gear, single stage planetary gear reduction type. The lubrication is of splash type using the rotation of the gears. The final drive can be removed and installed as a single unit.
- Floating seal (1) is installed to the rotating sliding portion of the sprocket to prevent the entry of dirt or sand and to prevent leakage of lubricating oil.

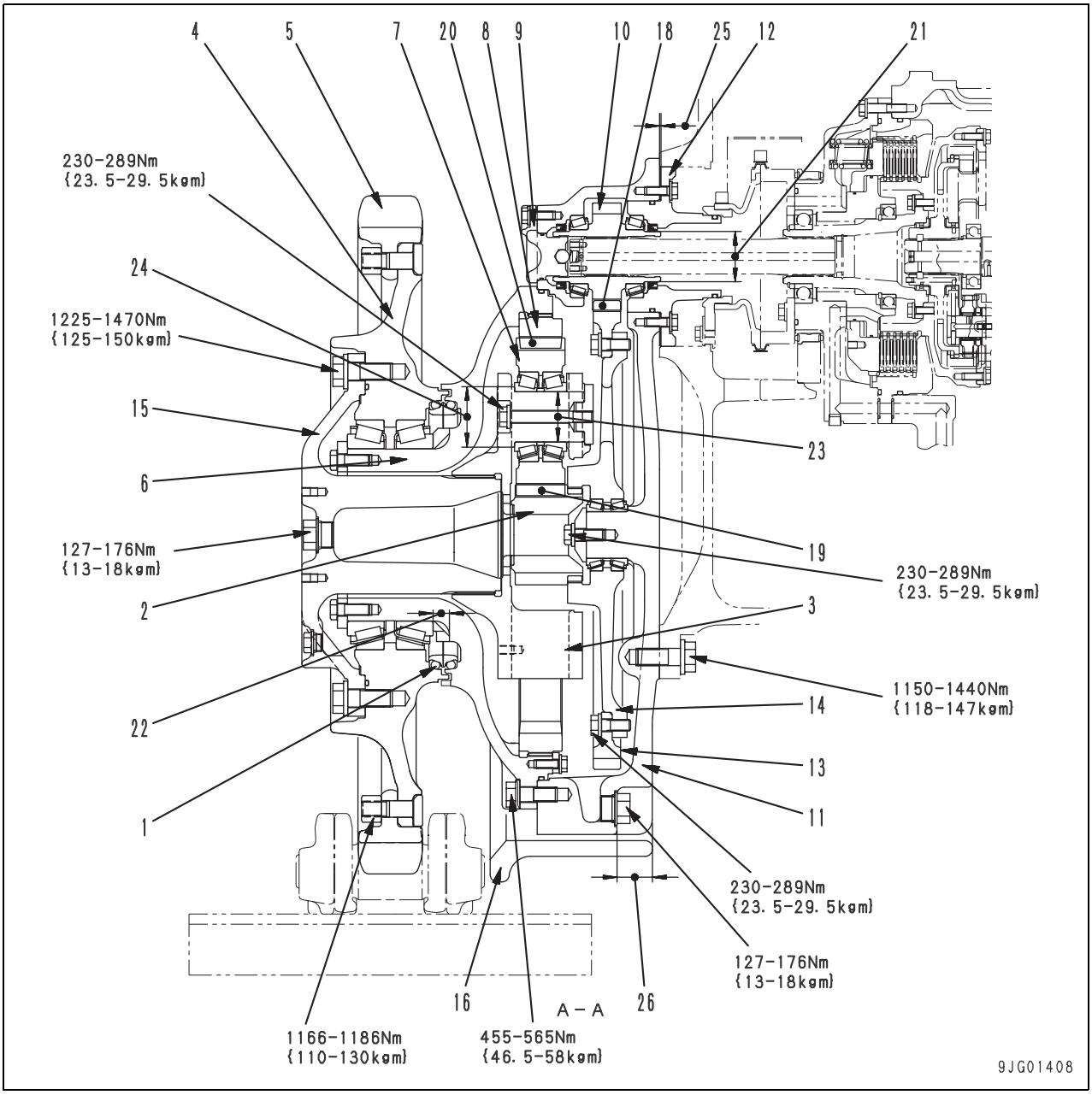
4
5
7
20
8
9
10
18
25
12
21
230-289Nm
{23. 5-29. 5kgm}
24
1225-1470Nm
{125-150kgm}
15
6
127-176Nm
{13-18kgm}
2
22
1
23
19
230-289Nm
{23. 5-29. 5kgm}
3
1150-1440Nm
{118-147kgm}
14
13
11
230-289Nm
{23. 5-29. 5kgm}
127-176Nm
{13-18kgm}
26
16
A - A
1166-1186Nm
{110-130kgm}
455-565Nm
{46. 5-58kgm}
9JG01408

1. Floating seal
2. Sun gear
3. Carrier
4. Sprocket boss
5. Sprocket teeth
6. Cover
7. Planetary gear
8. Ring gear
9. Cover
10. No.1 pinion
11. Final drive case
12. Bearing cage
13. No.1 gear
14. No.1 gear hub
15. Shaft
16. Wear guard
17. Pivot shaft

Unit: mm

No.	Check item	Criteria					Remedy
18	Backlash between No.1 pinion and No.1 gear	Standard clearance			Clearance limit		Replace
		0.25 – 0.77			0.77		
19	Backlash between sun gear and planetary gear	0.20 – 0.55			0.55		
20	Backlash between planetary gear and ring gear	0.22 – 0.71			0.71		
21	Outside diameter of No.1 pinion oil seal contact surface	Standard size		Tolerance		Repair limit	Repair or replace
		95		0 –0.087		94.913	
22	Thickness of thrust collar of inner body roller bearing	23			22.95		Replace
23	Clearance between outer diameter of planet gear shaft and inner diameter of carrier hole. (Small diameter)	Standard size	Tolerance		Standard clearance	Clearance limit	
			Shaft	Hole			
		68.262	–0.015 –0.034	–0.009 –0.039	- 0.024 – + 0.025	(Max. clearance) + 0.025	
24	Clearance between outer diameter of planet gear shaft and inner diameter of carrier hole.(Large diameter)	90	–0.036 –0.058	–0.066 –0.101	- 0.065 – - 0.008	– 0.008	
25	Standard shim thickness for No.1 pinion bearing cage	2					Adjust
26	Wear of wear guard	Standard size			Repair limit		Repair or replace
		67			21		

Path of power transmission

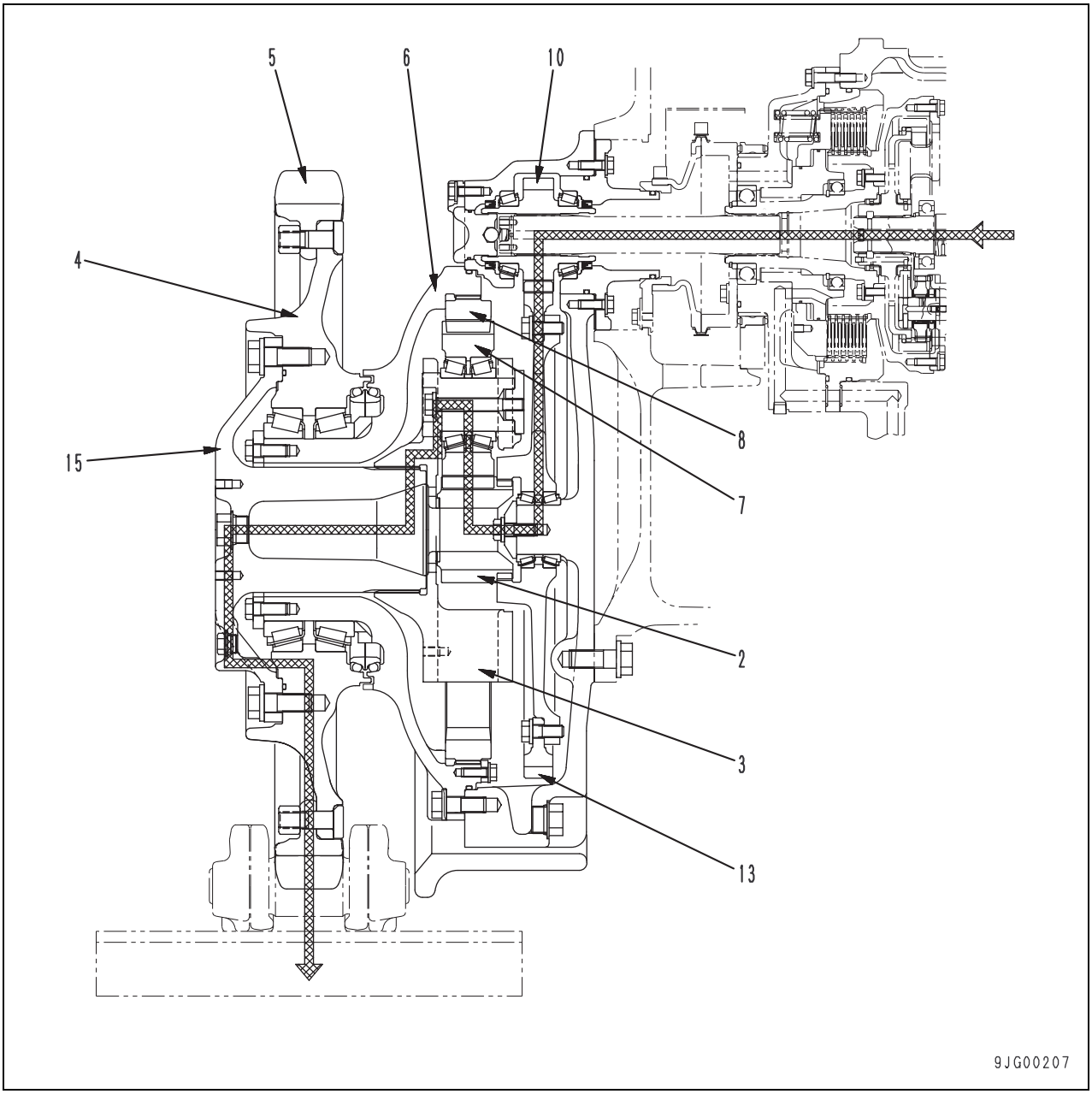

- The power from the bevel gear shaft and steering clutch is transmitted to 1st pinion (10) to rotate 1st gear (13) meshed with the 1st pinion and sun gear (2) meshed with the 1st gear.
  The rotation of sun gear (2) is transmitted to planetary gear (7). Since ring gear (8) meshed with the planetary gear is fixed to cover (6), the planetary gear (7) rotates along the ring gear (8) and revolves around the sun gear (2).
  Then, the rotating force of sun gear (2) forms the rotating force of carrier (3), which supports the planetary gear (7), via shaft (15), and is transmitted to sprocket boss (4).
  The rotating direction of carrier (3) is the same with sun gear (2).
  The rotational force transmitted to sprocket boss (4) is further transmitted to sprocket teeth (5).

Sprocket

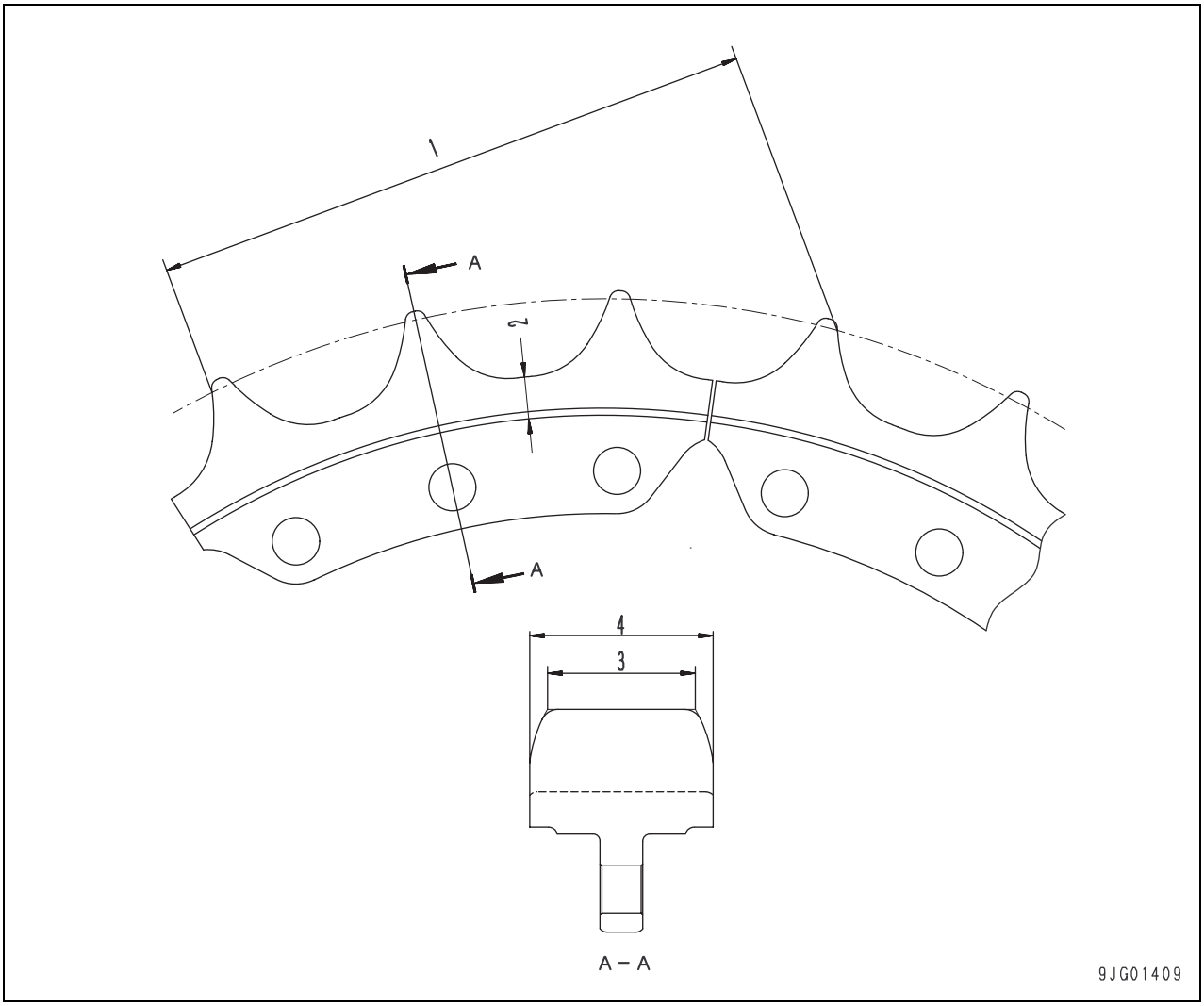

Unit: mm

No.	Check item	Criteria		Remedy
1	Wear of sprocket tooth tip	Standard clearance	Repair limit	Rebuid or replace
		351	339	
2	Wear of sprocket tooth root	23.7	17.5	
3	Wear of width of sprocket tooth tip	83	75	
4	Wear of width of sprocket tooth root	103	95	

Sprocket tooth shape of full scale

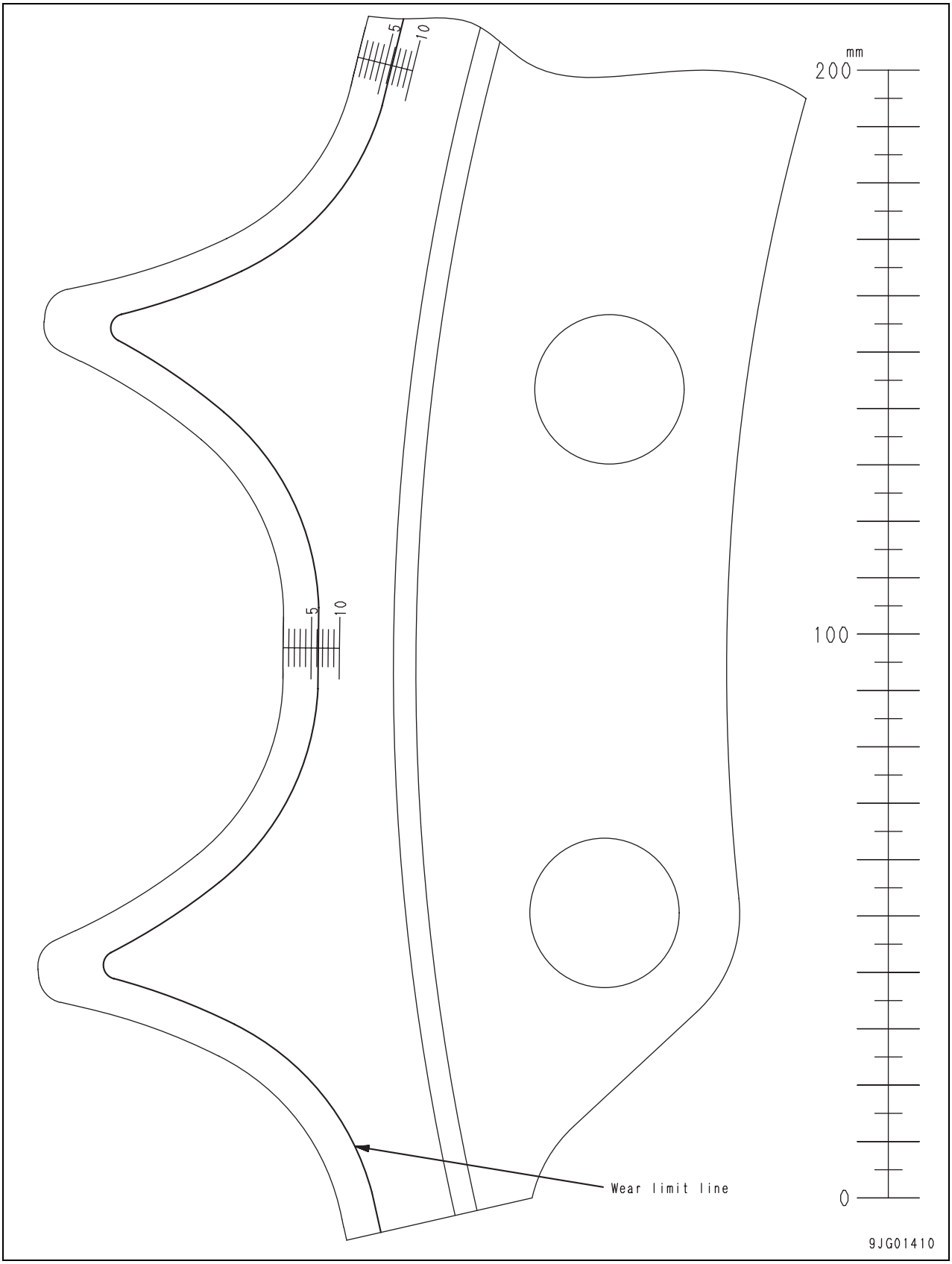

D155AX-6 Bulldozer
Form No. SEN00605-00

© 2005 KOMATSU
All Rights Reserved
Printed in Japan 12-05 (02)

BULLDOZER

D155AX-6

Machine model	Serial number
D155AX-6	80001 and up

10 Structure, function and maintenance standard

Undercarriage and frame

Undercarriage and frame 2
Track frame 2
Recoil spring 4
Idler 6
Track roller 8
Carrier roller 10
Track shoe 12
Main frame 18
Suspension 20

Undercarriage and frame

Track frame

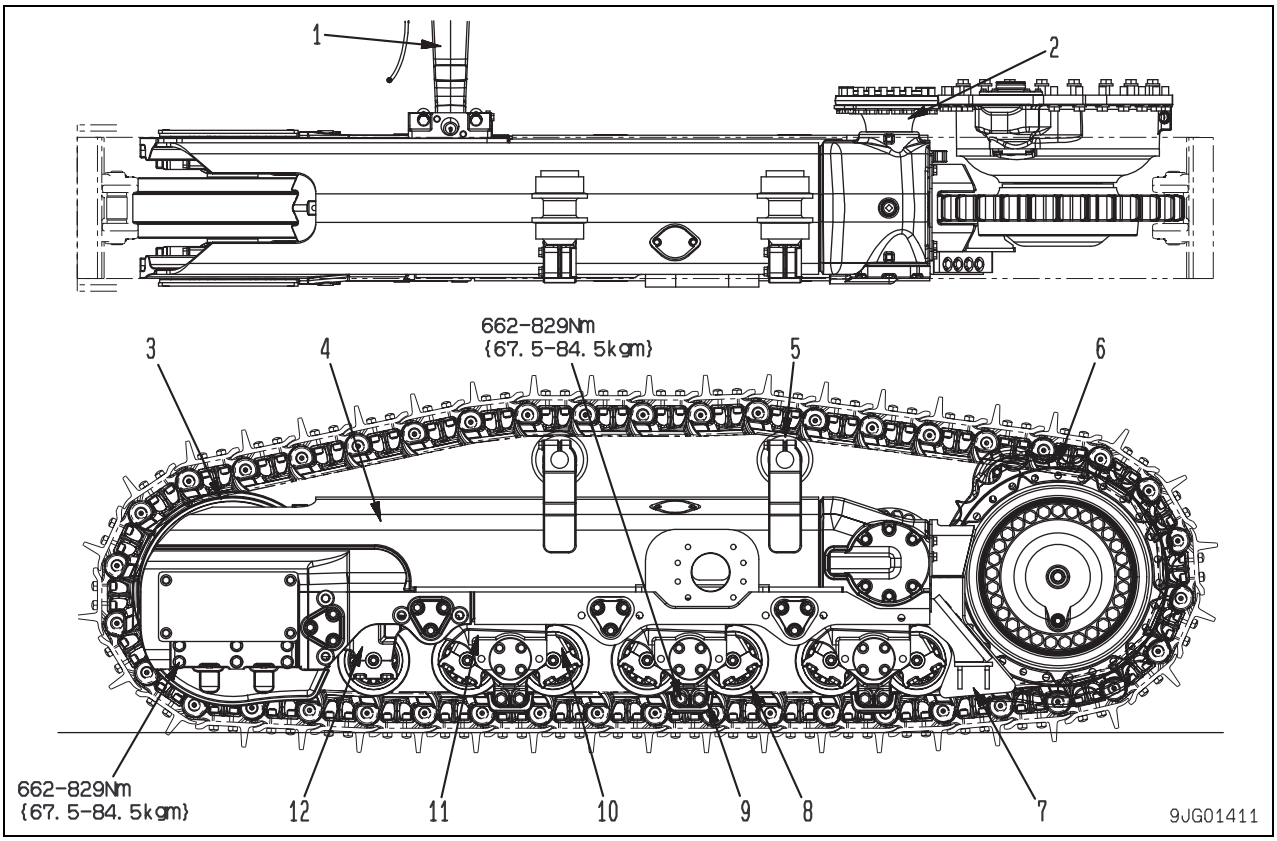

1. Equalizer bar
2. Pivot shaft
3. Idler
4. Track frame
5. Carrier roller
6. Sprocket
7. Sprocket cover guard
8. Track roller
9. Track roller support guard
10. Minor bogie
11. Major bogie
12. First bogie

Outline

- The track rollers are mounted on an K-shaped bogie. This increases the actual ground contact area between the track shoes and the ground on rough surfaces, and helps increase the drawbar pull.
- The K-shaped bogies are equipped with rubber pads to absorb the shock from the ground surface.

Track roller, bogie

Track roller flange type arrangement						
1st	2nd	3rd	4th	5th	6th	7th
S	D	S	D	S	D	S

D: Double
S: Single

Unit: mm

No.	Check item	Criteria		Remedy
4	Deformation of track frame	Item	Repair limit	Correct or replace
		Curvature	7 (over length of 3,000)	
		Twisting	3 (over length of 300)	
		Dents (pipe portion)	12	

Recoil spring

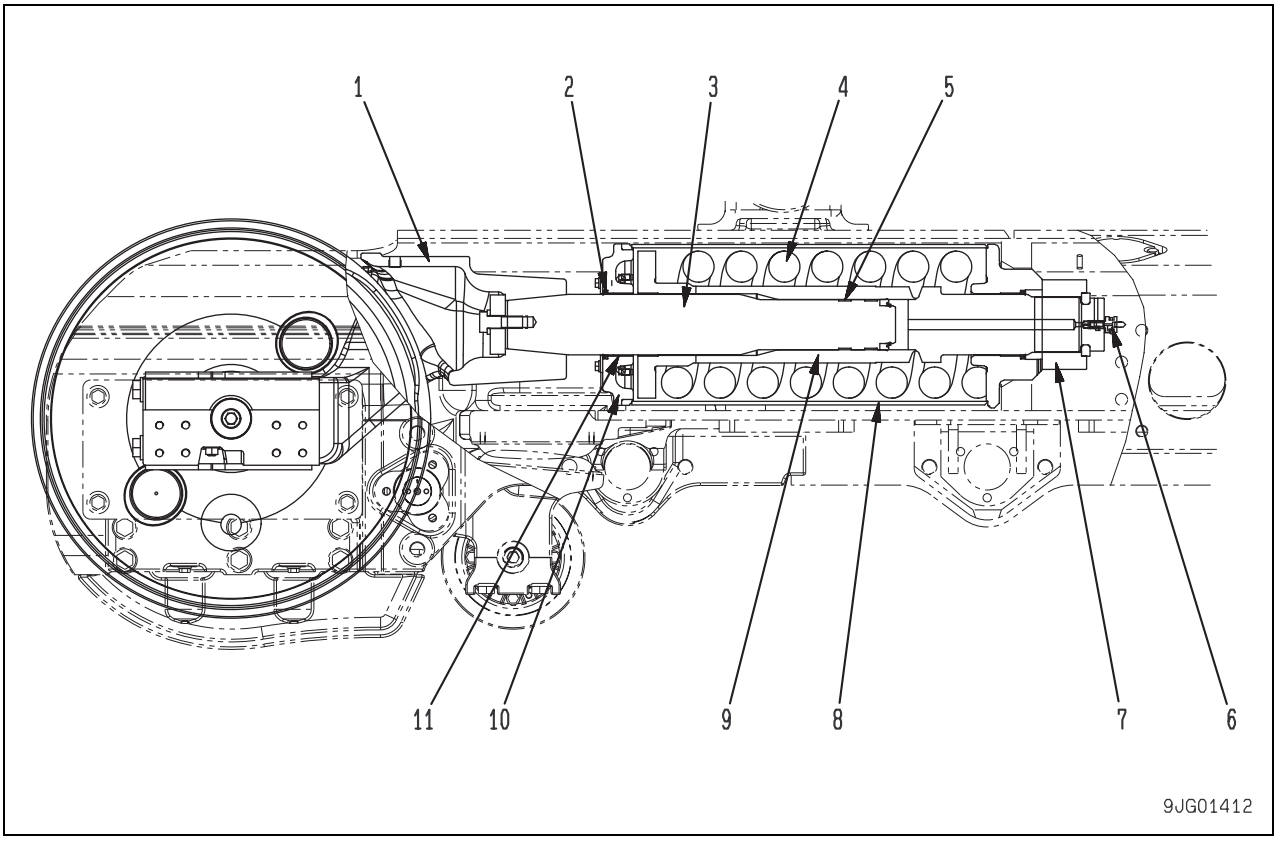

1. Yoke
2. Dust seal
3. Rod
4. Recoil spring
5. Wear ring
6. Lubricator
7. Nut
8. Housing
9. Cylinder
10. Holder
11. Bushing

Outline

- Recoil spring (4) is used to adjust the track tension by pumping in or releasing grease from lubricator (6) to move rod (3) forward or backward. The recoil spring also acts to dampen any sudden shock brought to bear on the idler.

Unit: mm

<table>
<tr><th>No.</th><th>Check item</th><th colspan="5">Criteria</th><th>Remedy</th></tr>
<tr><td>1</td><td>Press-fitting force for idler yoke</td><td colspan="5">392 kN {40 ton}</td><td>Adjust</td></tr>
<tr><td rowspan="2">11</td><td rowspan="2">Clearance between rod and bushing</td><td rowspan="2">Standard size</td><td colspan="2">Tolerance</td><td rowspan="2">Standard clearance</td><td rowspan="2">Clearance limit</td><td rowspan="5">Replace</td></tr>
<tr><td>Shaft</td><td>Hole</td></tr>
<tr><td>120</td><td>–0.036
–0.090</td><td>+0.277
+0.062</td><td>0.098 –
0.367</td><td>1.0</td></tr>
<tr><td rowspan="3">4</td><td rowspan="3">Recoil spring</td><td colspan="3">Standard size</td><td colspan="2">Repair limit</td></tr>
<tr><td>Free length</td><td>Installed length</td><td>Installed load</td><td>Free length</td><td>Installed load</td></tr>
<tr><td>859</td><td>656</td><td>314 kN
{32,000 kg}</td><td>804</td><td>288 kN
{29,400 kg}</td></tr>
</table>

Idler

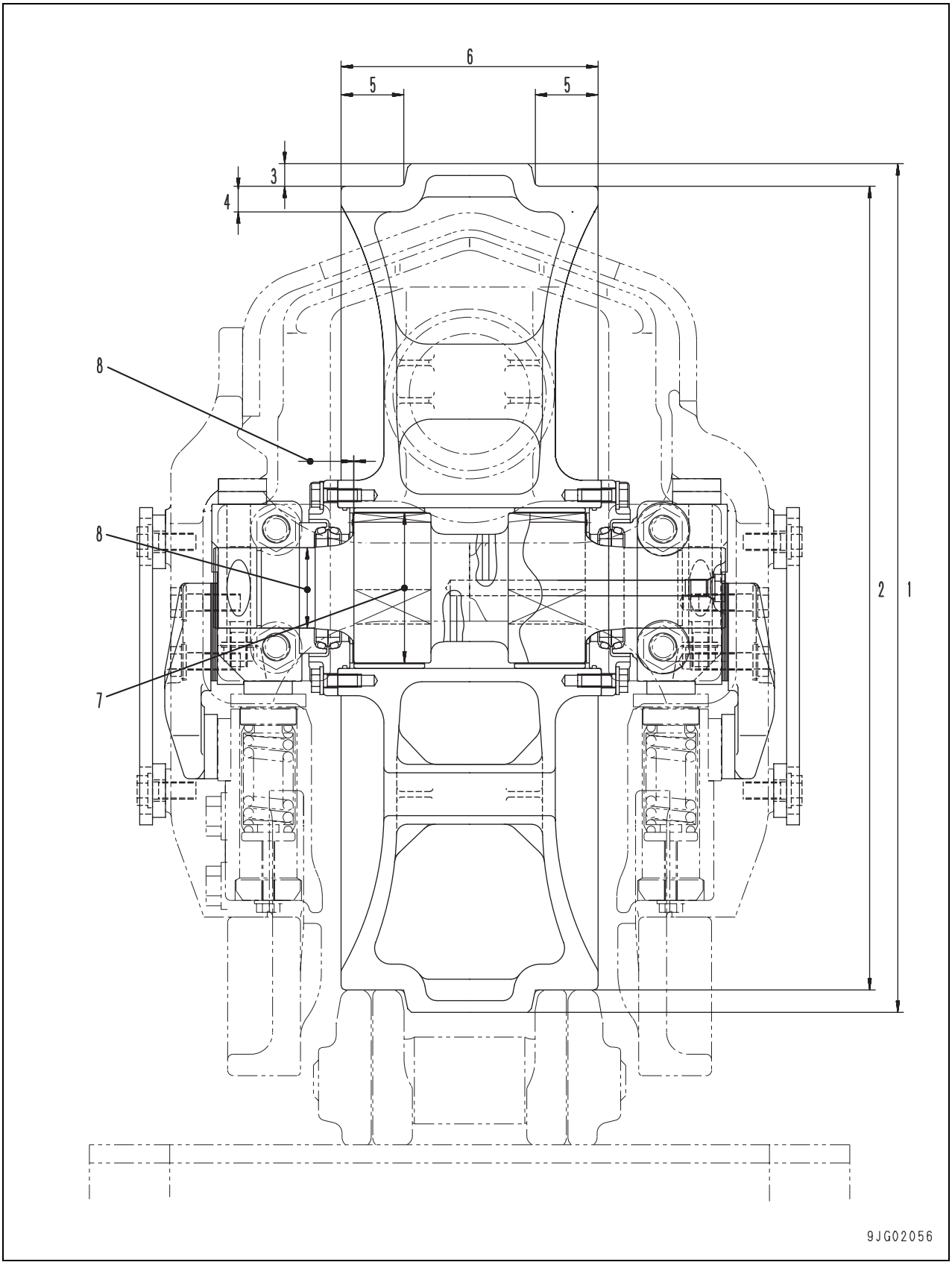

Unit: mm

<table>
<tr><th>No.</th><th>Check item</th><th colspan="6">Criteria</th><th>Remedy</th></tr>
<tr><td rowspan="2">1</td><td rowspan="2">Outer diameter of protrusion</td><td colspan="3">Standard size</td><td colspan="2">Repair limit</td><td rowspan="6">Rebuild or replace</td></tr>
<tr><td colspan="3">792</td><td colspan="2">—</td></tr>
<tr><td>2</td><td>Outer diameter of tread</td><td colspan="3">750</td><td colspan="2">725</td></tr>
<tr><td>3</td><td>Depth of tread</td><td colspan="3">21</td><td colspan="2">33.5</td></tr>
<tr><td>4</td><td>Thickness of tread</td><td colspan="3">24</td><td colspan="2">11.5</td></tr>
<tr><td>5</td><td>Width of tread</td><td colspan="3">58.5</td><td colspan="2">—</td></tr>
<tr><td>6</td><td>Overall width</td><td colspan="3">240</td><td colspan="2">—</td></tr>
<tr><td rowspan="2">7</td><td rowspan="2">Clearance between shaft and bushing</td><td rowspan="2">Standard size</td><td colspan="2">Tolerance</td><td rowspan="2">Standard clearance</td><td rowspan="2">Clearance limit</td><td rowspan="4">Replace bushing</td></tr>
<tr><td>Shaft</td><td>Hole</td></tr>
<tr><td>140</td><td>–0.350
–0.413</td><td>+0.265
+0.003</td><td>0.353 – 0.678</td><td>—</td></tr>
<tr><td rowspan="2">8</td><td rowspan="2">Interference between shaft and ring</td><td rowspan="2">Standard size</td><td colspan="2">Tolerance</td><td rowspan="2">Standard interference</td><td rowspan="2">Interference limit</td></tr>
<tr><td>Shaft</td><td>Hole</td></tr>
<tr><td>75</td><td>+0.046
0</td><td>+0.13
–0.18</td><td>0.130 – 0.226</td><td>—</td></tr>
<tr><td rowspan="2">9</td><td rowspan="2">Play of shaft in axial direction</td><td colspan="3">Standard size</td><td colspan="2">Repair limit</td><td rowspan="2">Rebuild or replace</td></tr>
<tr><td colspan="5">0.4 – 0.9</td></tr>
</table>

Track roller

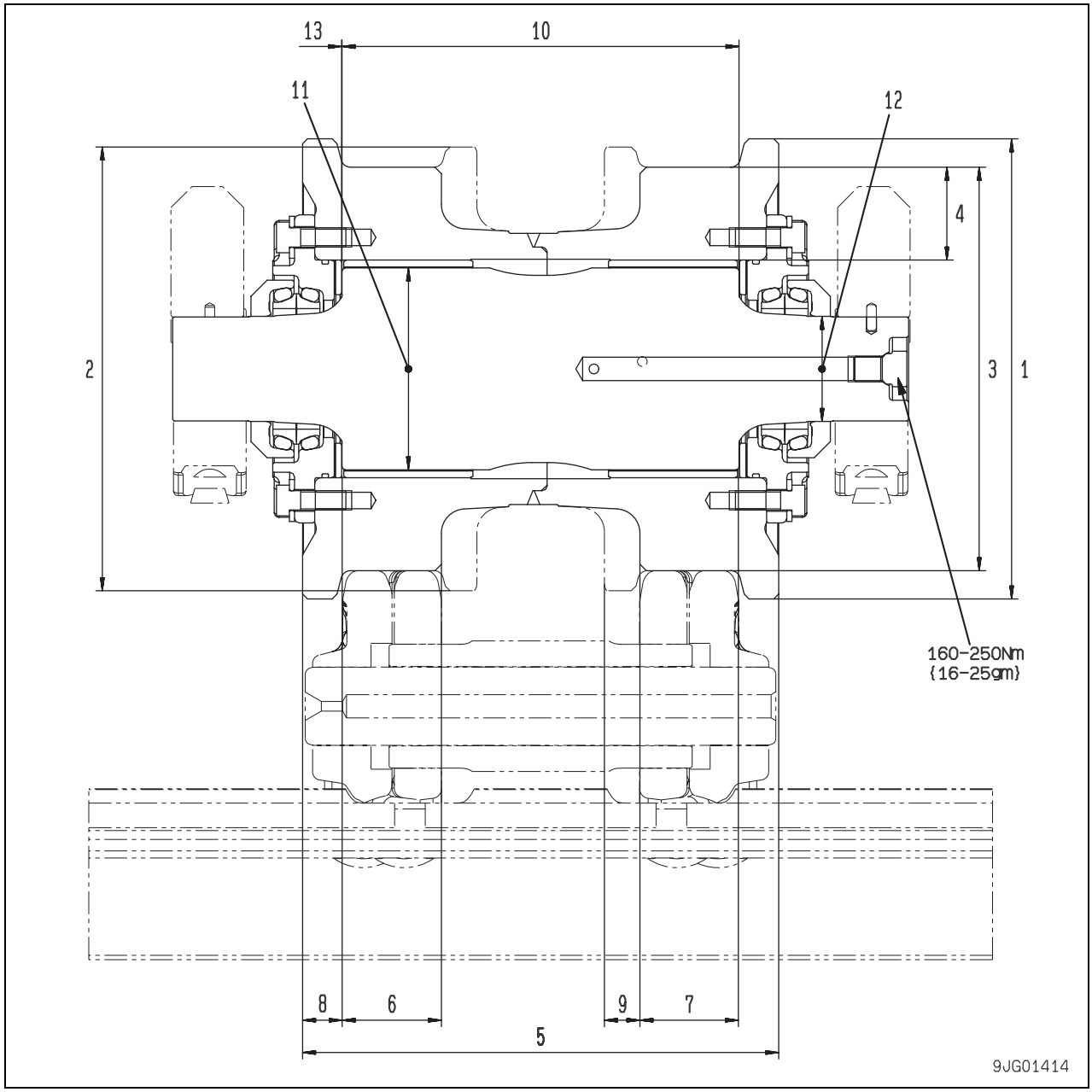

Unit: mm

<table>
<tr><th>No.</th><th>Check item</th><th colspan="5">Criteria</th><th>Remedy</th></tr>
<tr><td rowspan="2">1</td><td rowspan="2">Outer diameter of flange (outside flange)</td><td colspan="3">Standard size</td><td colspan="2">Repair limit</td><td rowspan="10">Rebuild or replace</td></tr>
<tr><td colspan="3">285</td><td colspan="2">—</td></tr>
<tr><td>2</td><td>Outer diameter of flange (inside flange)</td><td colspan="3">275</td><td colspan="2">—</td></tr>
<tr><td>3</td><td>Outer diameter of tread</td><td colspan="3">250</td><td colspan="2">210</td></tr>
<tr><td>4</td><td>Thickness of tread</td><td colspan="3">57.5</td><td colspan="2">37.5</td></tr>
<tr><td>5</td><td>Overall width</td><td colspan="3">295</td><td colspan="2">—</td></tr>
<tr><td>6</td><td>Width of tread (single flange)</td><td colspan="3">61</td><td colspan="2">—</td></tr>
<tr><td>7</td><td>Width of tread (double flange)</td><td colspan="3">61</td><td colspan="2">—</td></tr>
<tr><td>8</td><td>Flange width (outside of double flange)</td><td colspan="3">25</td><td colspan="2">—</td></tr>
<tr><td>9</td><td>Flange width (inside of double flange)</td><td colspan="3">22</td><td colspan="2">—</td></tr>
<tr><td>10</td><td>Shaft flange width</td><td colspan="3">246</td><td colspan="2">—</td></tr>
<tr><td rowspan="2">11</td><td rowspan="2">Clearance between shaft and bushing</td><td rowspan="2">Standard size</td><td colspan="2">Tolerance</td><td rowspan="2">Standard clearance</td><td rowspan="4">Replace</td></tr>
<tr><td>Shaft</td><td>Hole</td></tr>
<tr><td>125</td><td>–0.350
–0.413</td><td>+0.260
+0.010</td><td>0.360 – 0.673</td></tr>
<tr><td rowspan="2">12</td><td rowspan="2">Interference between shaft and ring</td><td rowspan="2">Standard size</td><td colspan="2">Tolerance</td><td rowspan="2">Standard interference</td></tr>
<tr><td>Shaft</td><td>Hole</td></tr>
<tr><td>65</td><td>+0.046
0</td><td>–0.15
–0.20</td><td>0.150 – 0.246</td></tr>
<tr><td rowspan="2">13</td><td rowspan="2">End play</td><td colspan="3">Standard size</td><td colspan="2">Clearance limit</td><td rowspan="2">Adjust or replace</td></tr>
<tr><td colspan="3">0.44 – 0.91</td><td colspan="2">—</td></tr>
</table>

Carrier roller

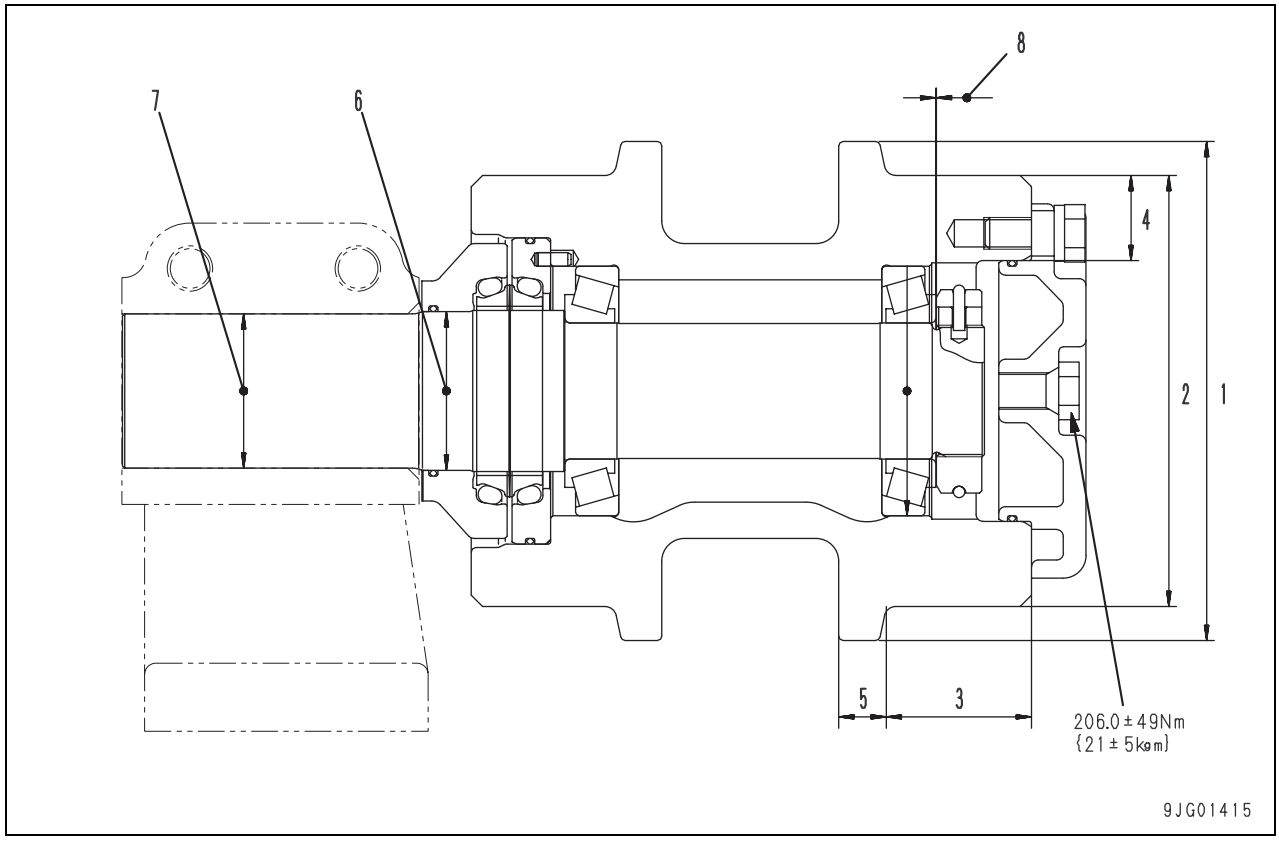

Unit: mm

<table>
<tr><th>No.</th><th>Check item</th><th colspan="5">Criteria</th><th>Remedy</th></tr>
<tr><td rowspan="2">1</td><td rowspan="2">Outer diameter of flange</td><td colspan="2">Standard size</td><td colspan="2">Repair limit</td><td rowspan="6">Rebuild or replace</td></tr>
<tr><td colspan="2">220</td><td colspan="2">—</td></tr>
<tr><td>2</td><td>Outer diameter of tread</td><td colspan="2">190</td><td colspan="2">171</td></tr>
<tr><td>3</td><td>Width of tread</td><td colspan="2">63</td><td colspan="2">—</td></tr>
<tr><td>4</td><td>Thickness of tread</td><td colspan="2">37.5</td><td colspan="2">28</td></tr>
<tr><td>5</td><td>Width of flange</td><td colspan="2">21</td><td colspan="2">—</td></tr>
<tr><td rowspan="2">6</td><td rowspan="2">Interference between shaft and ring</td><td rowspan="2">Standard size</td><td colspan="2">Tolerance</td><td rowspan="2">Standard interference</td><td rowspan="5">Replace</td></tr>
<tr><td>Shaft</td><td>Hole</td></tr>
<tr><td>70</td><td>+0.166
+0.120</td><td>+0.030
0</td><td>0.090 – 0.166</td></tr>
<tr><td rowspan="2">7</td><td rowspan="2">Clearance between shaft and support</td><td rowspan="2">Standard size</td><td colspan="2">Tolerance</td><td rowspan="2">Standard clearance</td></tr>
<tr><td>Shaft</td><td>Hole</td></tr>
<tr><td>68</td><td>0
–0.2</td><td>+0.300
0</td><td>0 – 0.5</td></tr>
<tr><td rowspan="2">8</td><td rowspan="2">Play of roller in axial direction</td><td colspan="4">Standard clearance</td></tr>
<tr><td colspan="4">0.010 – 0.230</td></tr>
</table>

Track shoe

Dry type

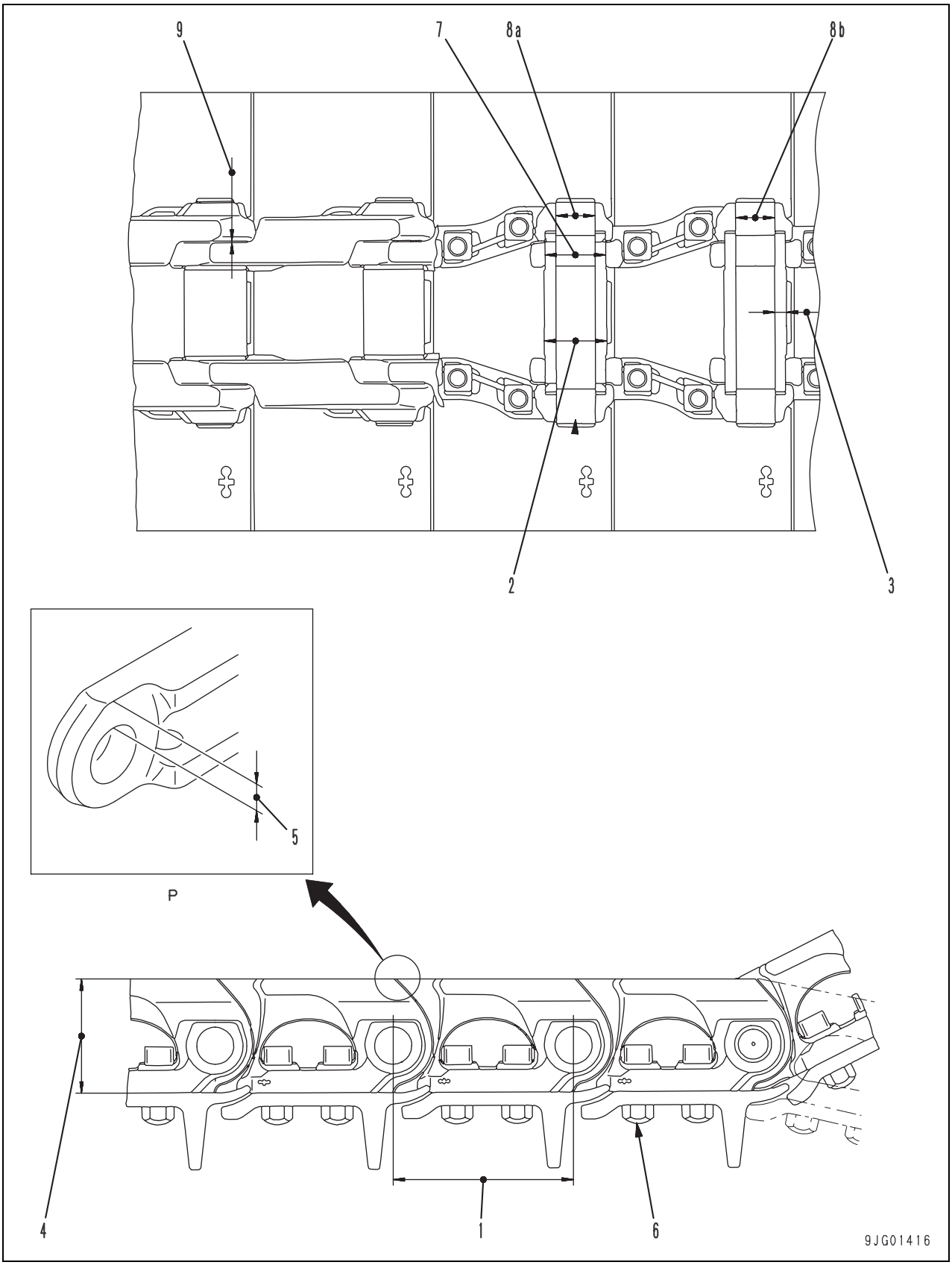

★ P portion shows the link of bushing press fitting end.

Unit: mm

<table>
<tr><th>No.</th><th>Check item</th><th colspan="5">Criteria</th><th>Remedy</th></tr>
<tr><td rowspan="2">1</td><td rowspan="2">Link pitch</td><td colspan="3">Standard size</td><td colspan="2">Repair limit</td><td rowspan="5">Reverse or replace</td></tr>
<tr><td colspan="3">228.85</td><td colspan="2">231.85 (Heavy-duty areas)
233.85 (Standard areas)</td></tr>
<tr><td rowspan="3">2</td><td rowspan="3">Bushing outside diameter</td><td rowspan="2">Standard size</td><td colspan="3">When turned</td></tr>
<tr><td>Normal load</td><td colspan="2">Impact load</td></tr>
<tr><td>81</td><td>75.0</td><td colspan="2">77.0</td></tr>
<tr><td>3</td><td>Thickness of bushing metal</td><td>15.8</td><td>9.8</td><td colspan="2">11.8</td></tr>
<tr><td rowspan="2">4</td><td rowspan="2">Link height</td><td colspan="3">Standard size</td><td colspan="2">Repair limit</td><td rowspan="3">Repair or replace</td></tr>
<tr><td colspan="3">144</td><td colspan="2">128</td></tr>
<tr><td>5</td><td>Thickness of link metal (bushing press-fitting portion)</td><td colspan="3">45.5</td><td colspan="2">29.5</td></tr>
<tr><td rowspan="2">6</td><td rowspan="2">Shoe bolt</td><td colspan="3">Tightening torque (Nm {kgm})</td><td colspan="2">Additional tightening angle (deg.)</td><td rowspan="2">Retighten</td></tr>
<tr><td colspan="3">588.4 ± 58.8 {60 ± 6}</td><td colspan="2">120 ± 10</td></tr>
<tr><td rowspan="2">7</td><td rowspan="2">Interference between bushing and link</td><td rowspan="2">Standard size</td><td colspan="2">Tolerance</td><td rowspan="2">Standard interference</td><td rowspan="6">Adjust or replace</td></tr>
<tr><td>Shaft</td><td>Hole</td></tr>
<tr><td>77.0</td><td>+0.404
+0.304</td><td>+0.074
0</td><td>0.230 – 0.404</td></tr>
<tr><td>8a</td><td>Interference between regular pin and link</td><td>48.5</td><td>+0.484
+0.334</td><td>–0.038
–0.100</td><td>0.372 – 0.584</td></tr>
<tr><td>8b</td><td>Interference between master pin and link</td><td>48.5</td><td>+0.230
+0.200</td><td>–0.038
–0.100</td><td>0.238 – 0.330</td></tr>
<tr><td rowspan="3">9</td><td rowspan="3">Clearance between links</td><td colspan="5">Standard clearance</td></tr>
<tr><td colspan="3">One side</td><td colspan="2">Both side</td></tr>
<tr><td colspan="3">1.4</td><td colspan="2">2.8</td></tr>
</table>

Sealed and lubricated track

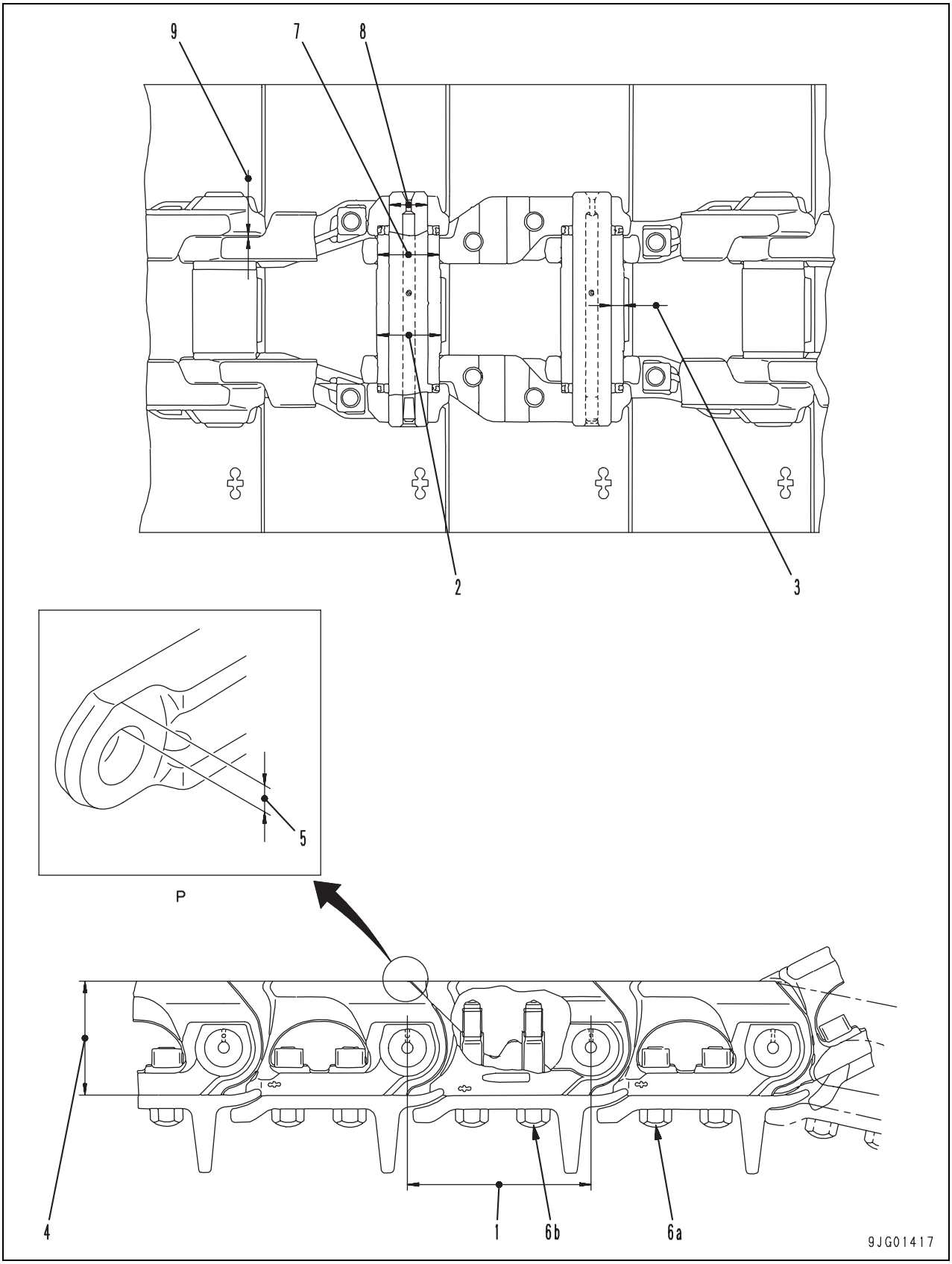

★ P portion shows the link of bushing press fitting end.

Unit: mm

<table>
<tr><th>No.</th><th colspan="2">Check item</th><th colspan="5">Criteria</th><th>Remedy</th></tr>
<tr><td rowspan="2">1</td><td colspan="2" rowspan="2">Link pitch</td><td colspan="3">Standard size</td><td colspan="2">Repair limit</td><td rowspan="5">Reverse or replace</td></tr>
<tr><td colspan="3">228.85</td><td colspan="2">231.85</td></tr>
<tr><td rowspan="3">2</td><td colspan="2" rowspan="3">Bushing outside diameter</td><td rowspan="2">Standard size</td><td colspan="4">When turned</td></tr>
<tr><td colspan="2">Normal load</td><td>Impact load</td></tr>
<tr><td>81</td><td colspan="2">72.5</td><td>75.0</td></tr>
<tr><td>3</td><td colspan="2">Thickness of bushing metal</td><td>15.8</td><td colspan="2">7.3</td><td>9.8</td></tr>
<tr><td rowspan="2">4</td><td colspan="2" rowspan="2">Link height</td><td colspan="3">Standard size</td><td colspan="2">Repair limit</td><td rowspan="3">Repair or replace</td></tr>
<tr><td colspan="3">144</td><td colspan="2">128</td></tr>
<tr><td>5</td><td colspan="2">Thickness of link metal (bushing press-fitting portion)</td><td colspan="3">45.5</td><td colspan="2">29.5</td></tr>
<tr><td rowspan="3">6</td><td rowspan="3">Shoe bolt</td><td rowspan="2">a. Regular link</td><td colspan="3">Tightening torque (Nm {kgm})</td><td colspan="2">Additional tightening angle (deg.)</td><td rowspan="3">Retighten</td></tr>
<tr><td colspan="3">588.4 ± 58.8 {60 ± 6}</td><td colspan="2">120 ± 10</td></tr>
<tr><td>b. Master link</td><td colspan="3">588.4 ± 58.8 {60 ± 6}</td><td colspan="2">180 ± 10</td></tr>
<tr><td rowspan="2">7</td><td colspan="2" rowspan="2">Interference between bushing and link</td><td rowspan="2">Standard size</td><td colspan="2">Tolerance</td><td rowspan="2">Standard interference</td><td rowspan="5">Adjust or replace</td></tr>
<tr><td>Shaft</td><td>Hole</td></tr>
<tr><td>77.0</td><td>+0.404
+0.304</td><td>+0.074
0</td><td>0.230 – 0.404</td></tr>
<tr><td>8</td><td colspan="2">Interference between regular pin and link</td><td>48.5</td><td>+0.484
+0.334</td><td>–0.038
–0.100</td><td>0.372 – 0.584</td></tr>
<tr><td rowspan="3">9</td><td colspan="2" rowspan="3">Clearance between links</td><td colspan="5">Standard clearance</td></tr>
<tr><td colspan="3">One side</td><td colspan="2">Both side</td></tr>
<tr><td colspan="3">1.4</td><td colspan="2">2.8</td></tr>
</table>

Single shoe, heavy duty shoe

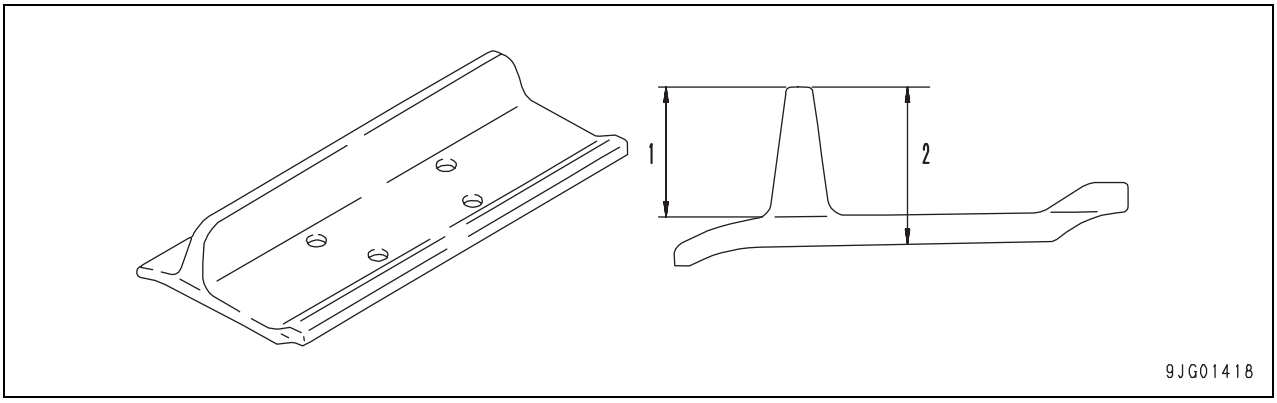

Unit: mm

No.	Check item		Criteria		Remedy
			Standard size	Repair limit	
1	Height of grouser	single	80	30	Repair or replace
		heavy duty	80	30	
2	Overall height of shoe	single	97	47	
		heavy duty	99	49	

Main frame

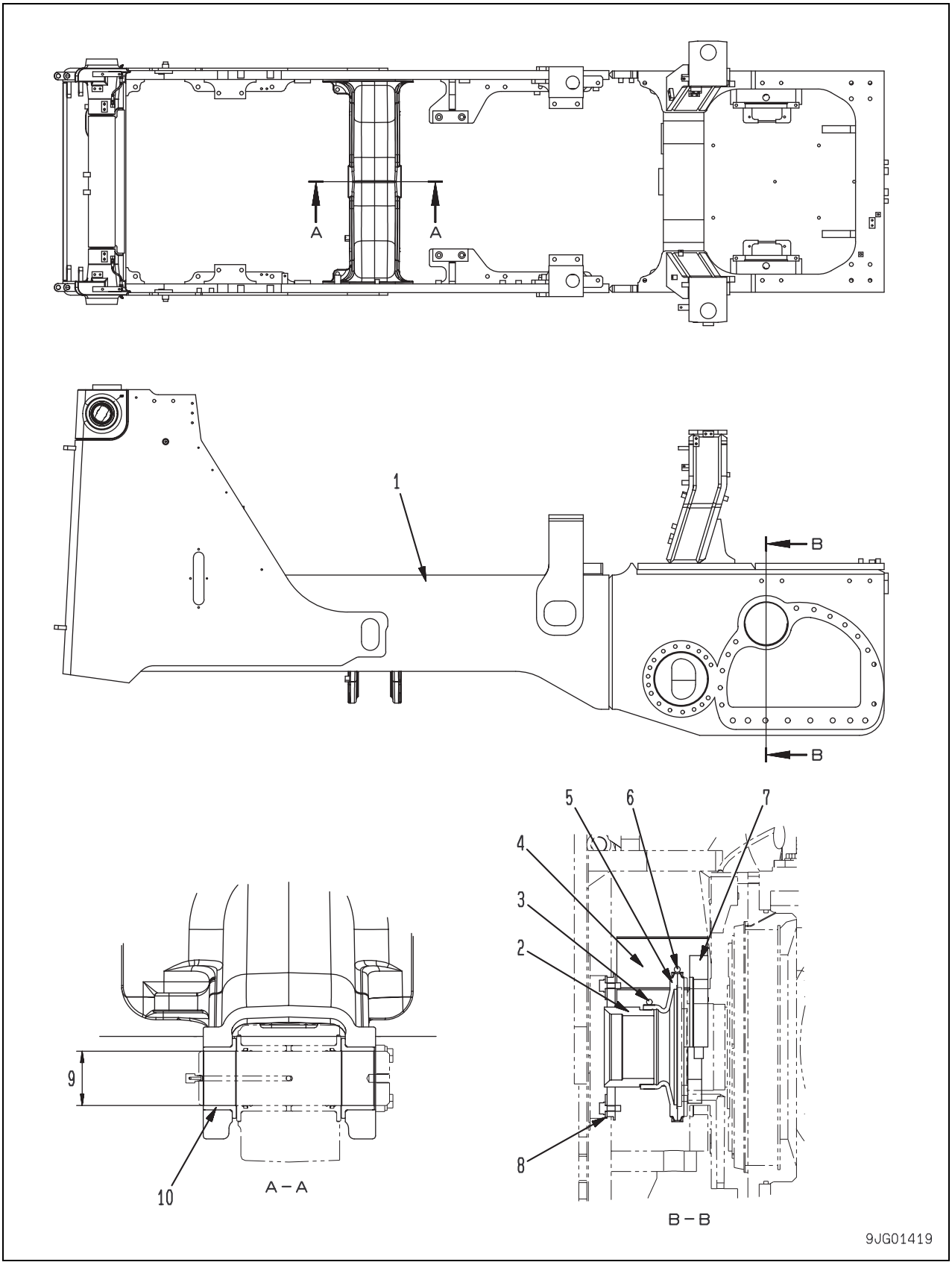

1. Main frame
2. Cage
3. Clamp
4. Cover
5. Seal
6. Coupling
7. Cap
8. Plate

Unit: mm

No.	Check item	Criteria					Remedy
		Standard size	Tolerance		Standard clearance	Clearance limit	
			Shaft	Hole			
9	Clearance between equalizer bar shaft and bushing	95	–0.036 –0.090	+0.213 +0.129	0.165 – 0.303	1.0	Replace
10	Press-fitting force for equalizer bar shaft mounting bushing	29.42 – 68.65 kN {3 – 7 ton}					Adjust

Suspension

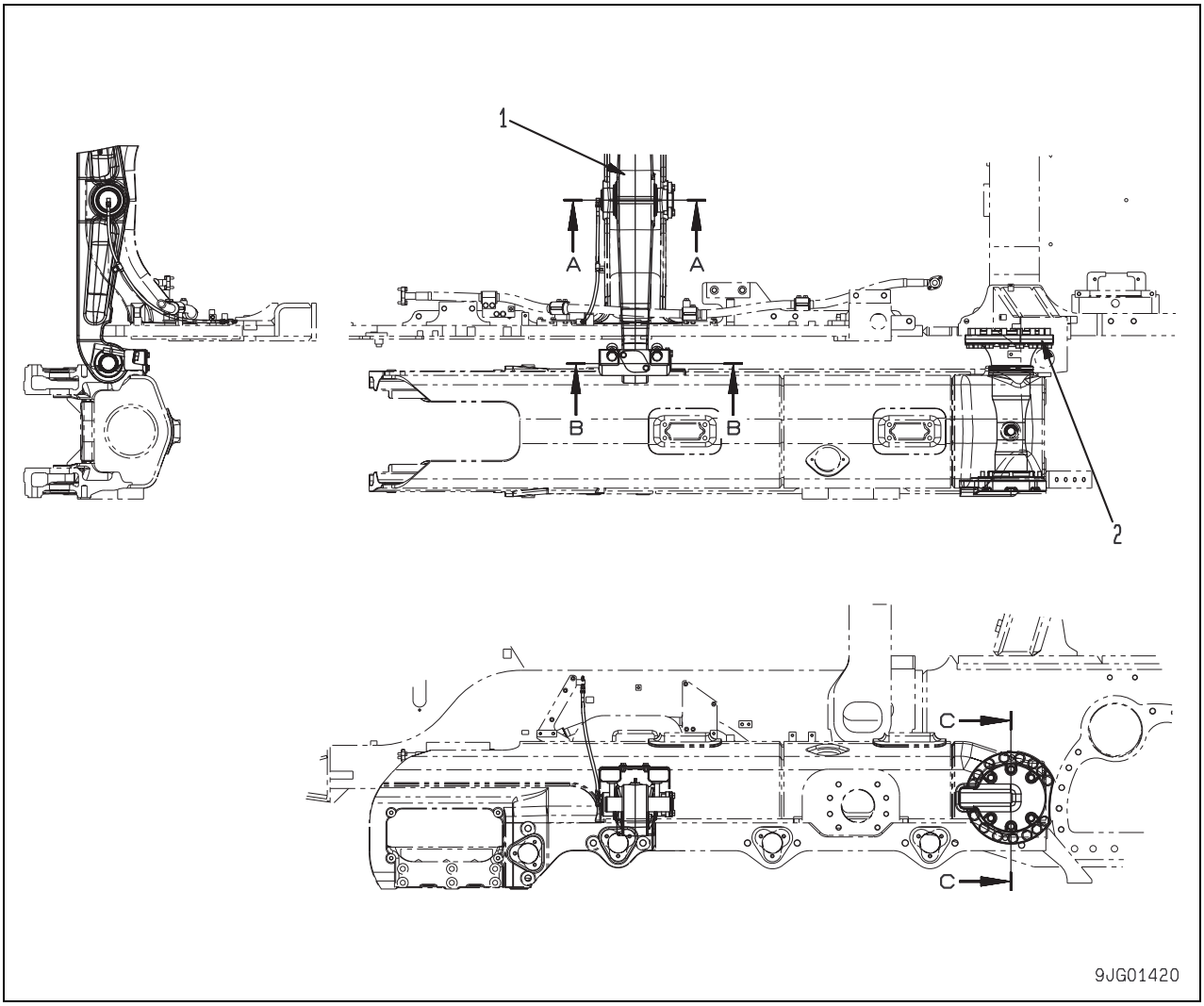

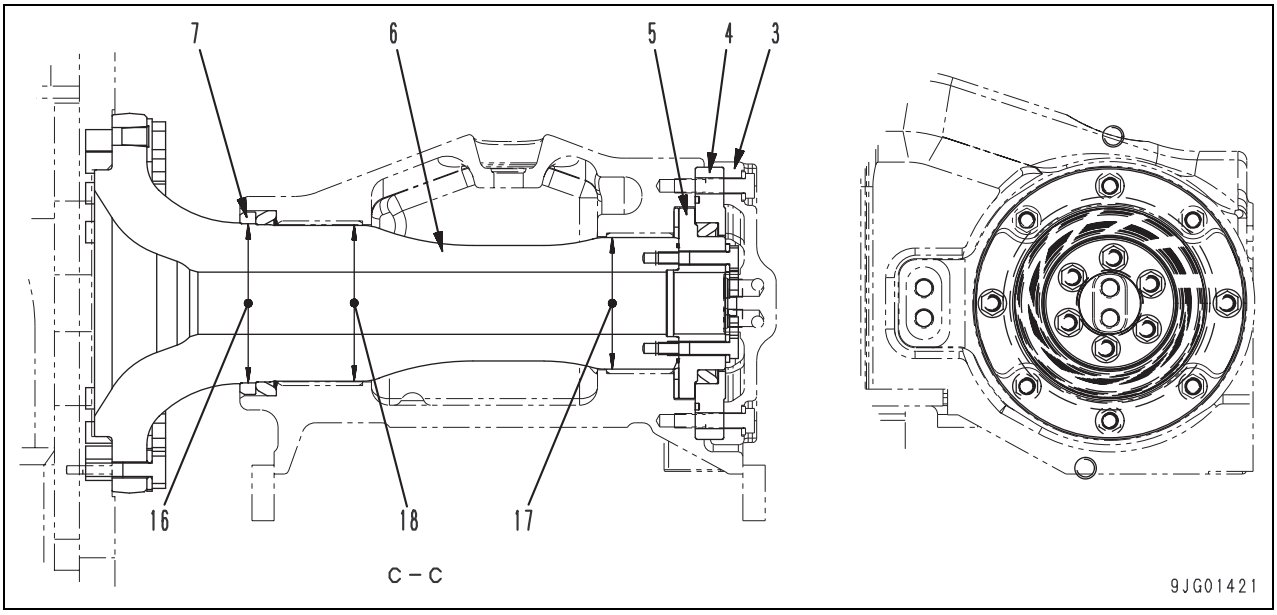

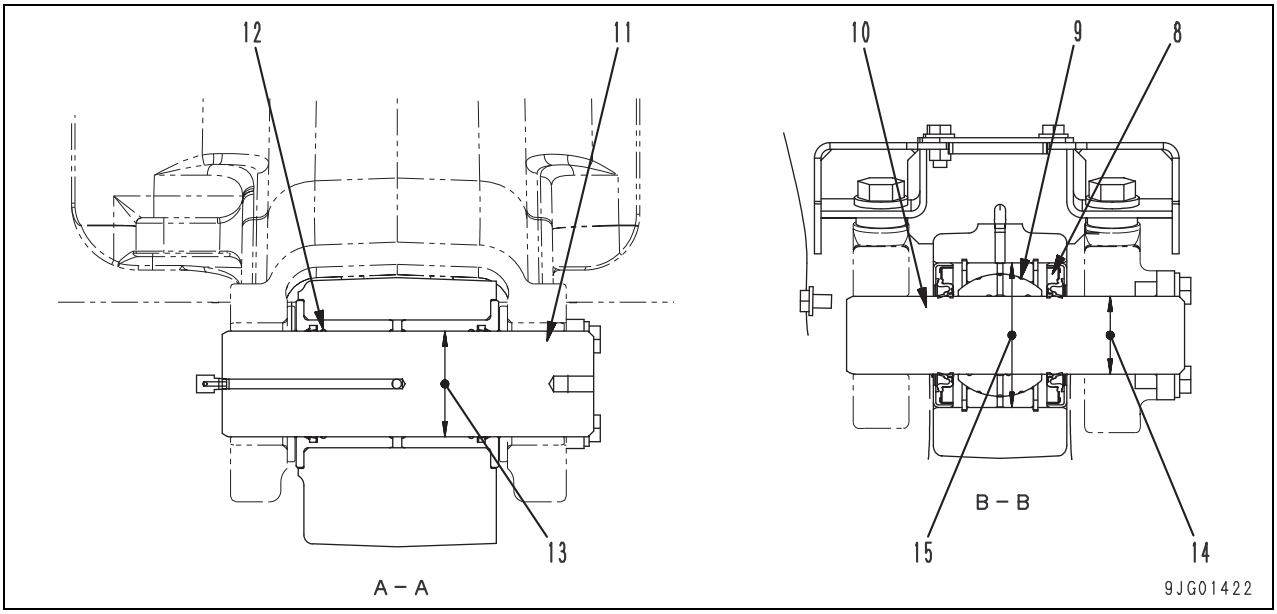

1. Equalizer bar
2. Pivot shaft assembly
3. Cover
4. Thrust plate
5. Thrust plate
6. Pivot shaft
7. Seal cage
8. Seal
10. Side pin
11. Center pin

Unit: mm

No.	Check item	Criteria					Remedy
9	Press-fitting force for side pin bushing	27.46 – 64.7 kN {2.8 – 6.6 ton}					—
12	Press-fitting force for center pin bushing	47.07 – 131.41 kN {4.8 – 13.4 ton}					
13	Clearance between center pin and bushing	Standard size	Tolerance		Standard clearance	Clearance limit	Replace bushing
			Shaft	Hole			
		95	–0.036 –0.090	+0.279 +0.213	0.249 – 0.369	1.0	
14	Clearance between side pin and bushing	70	–0.030 –0.060	+0.046 0	0.030 – 0.106	1.0	
15	Interference between side pin boss and bushing	Standard size	Tolerance		Standard interference	Interference limit	
			Shaft	Hole			
		130	+0.033 +0.015	–0.028 –0.068	0.043 – 0.101	—	
16	Interference between pivot shaft and seal stopper ring	179	+0.083 +0.043	–0.053 –0.093	0.096 – 0.176	—	
17	Clearance between pivot shaft and bushing (outer)	Standard size	Tolerance		Standard clearance	Clearance limit	
			Shaft	Hole			
		148	–0.145 –0.208	+0.099 +0.035	0.180 – 0.307	1.0	
18	Clearance between pivot shaft and bushing (inner)	175	–0.145 –0.208	+0.095 +0.025	0.170 – 0.303	1.0	

Outline

- The front of the track frame rocks up and down using the rear pivot shafts (6) as a fulcrum. Equalizer bar (1) rocks using center pin (11) as a fulcrum. The left and right track frames are connected by side pin (10).

D155AX-6 Bulldozer

Form No. SEN00606-00

© 2005 KOMATSU
All Rights Reserved
Printed in Japan 12-05 (02)

BULLDOZER

D155AX-6

Machine model	Serial number
D155AX-6	80001 and up

10 Structure, function and maintenance standard

Hydraulic system

Hydraulic system 2
Work equipment hydraulic piping diagram 2
Work equipment control piping diagram 5
Work equipment control 6
Hydraulic tank and filter 8
Accumulator 10
PCCS lever 11
Work equipment lock valve 15
Control valve 16
Work equipment cylinder 52
Piston valve 54
Quick drop valve 56
Self pressure reducing valve 61

Hydraulic system

Work equipment hydraulic piping diagram

Semi U-dozer

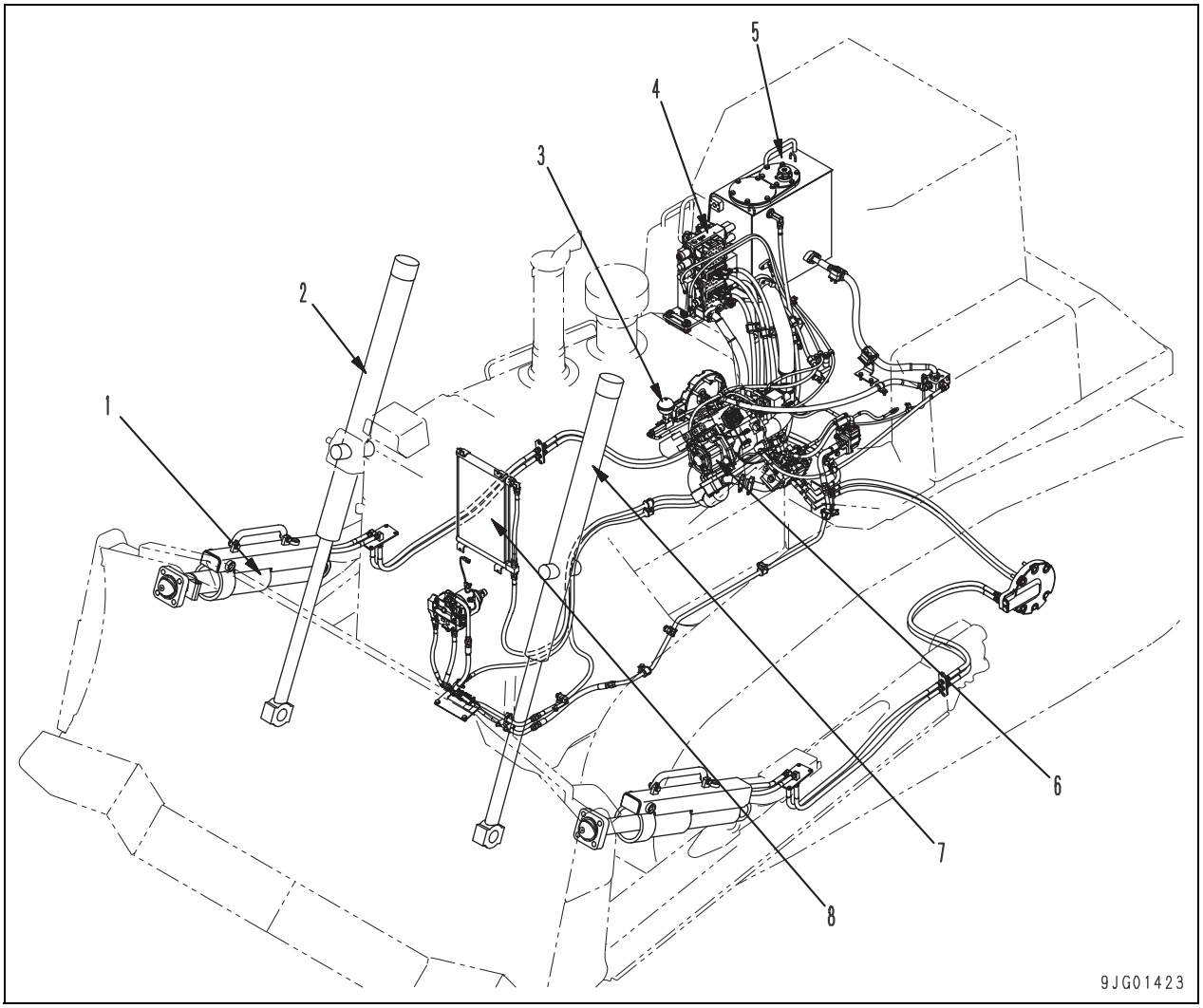

1. Blade tilt cylinder
2. R.H. blade lift cylinder
3. Accumulator
4. Control valve
5. Hydraulic tank
6. Hydraulic, HSS pump
7. L.H. blade lift cylinder
8. Oil cooler

Multi-shank ripper

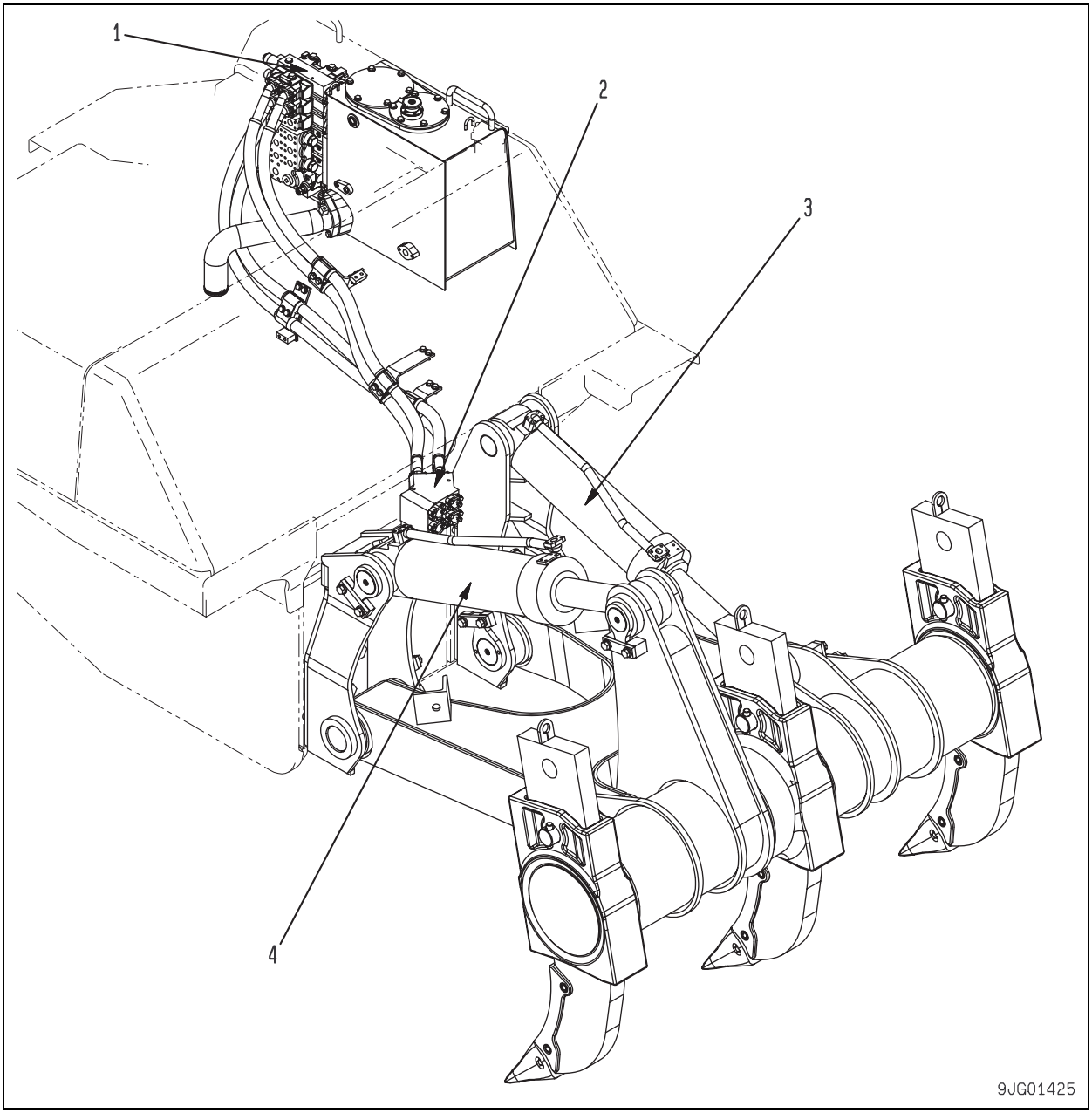

1. Control valve
2. Divider block
3. Ripper lift cylinder
4. Ripper tilt cylinder

Giant ripper

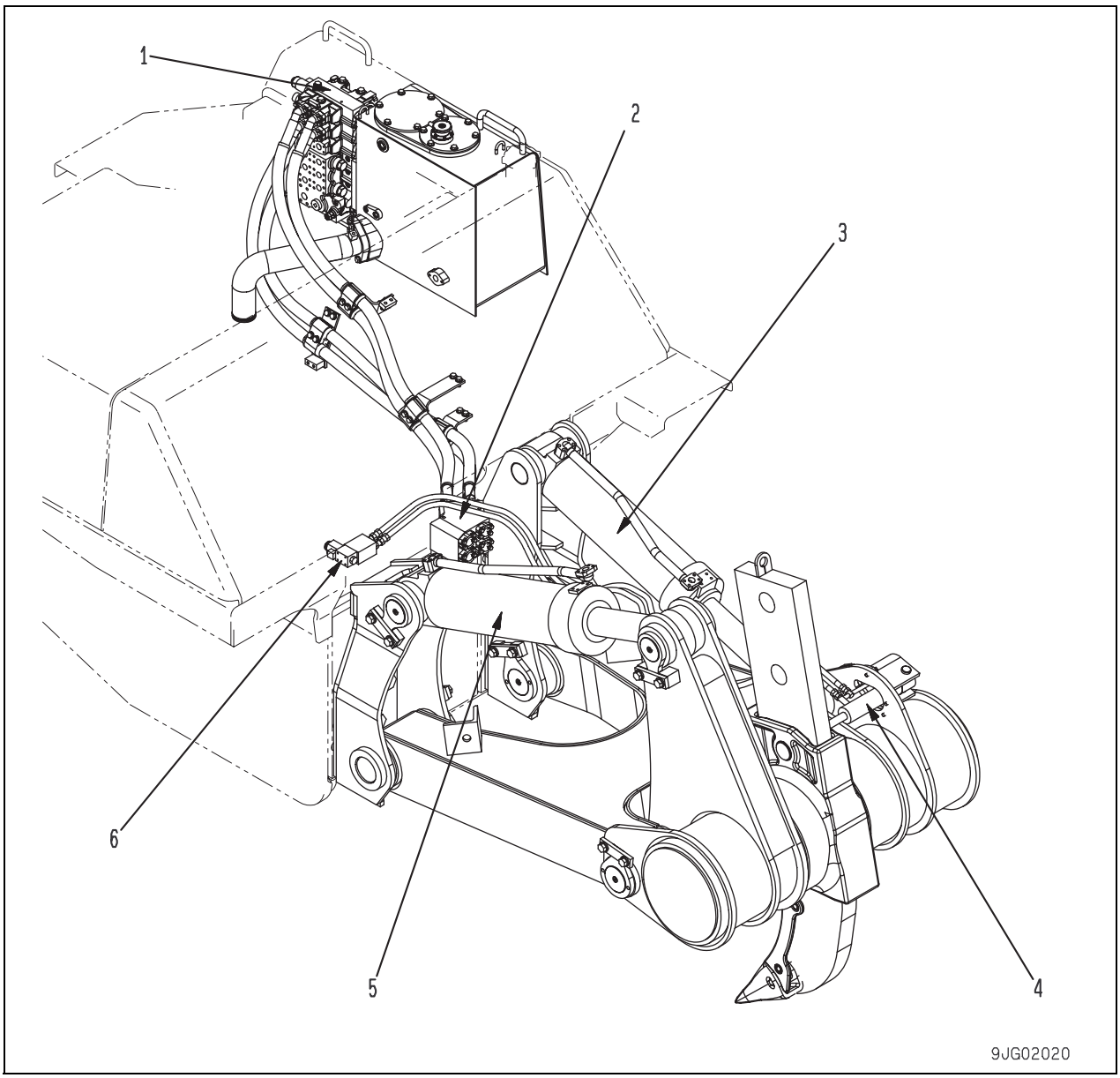

1. Control valve
2. Divider block
3. Ripper lift cylinder
4. Pin puller cylinder
5. Ripper tilt cylinder
6. Pin puller solenoid valve

Work equipment control piping diagram

Blade, ripper control

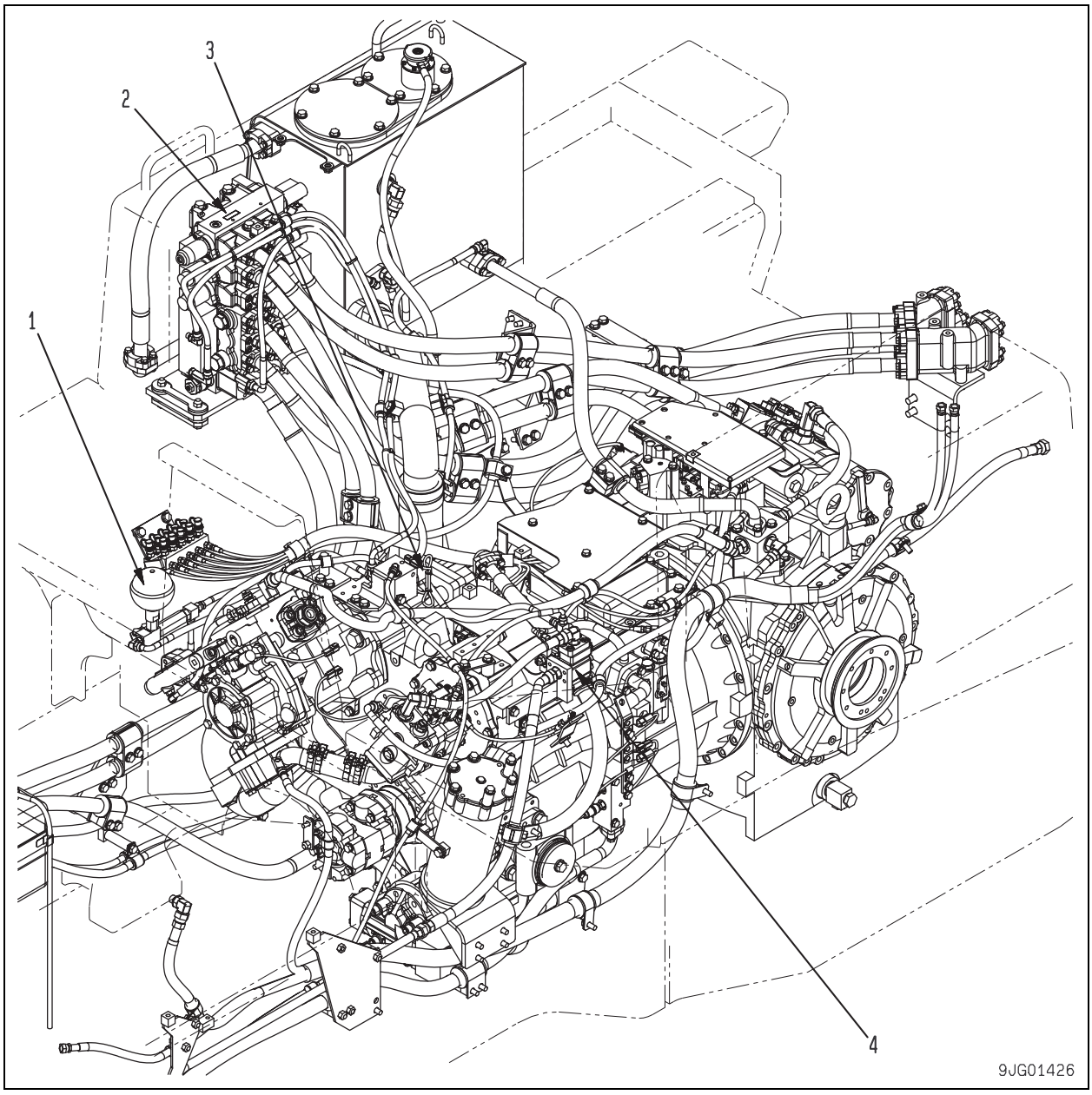

1. Accumulator
2. Control valve
3. Work equipment lock valve
4. Self pressure reducing valve

Work equipment control

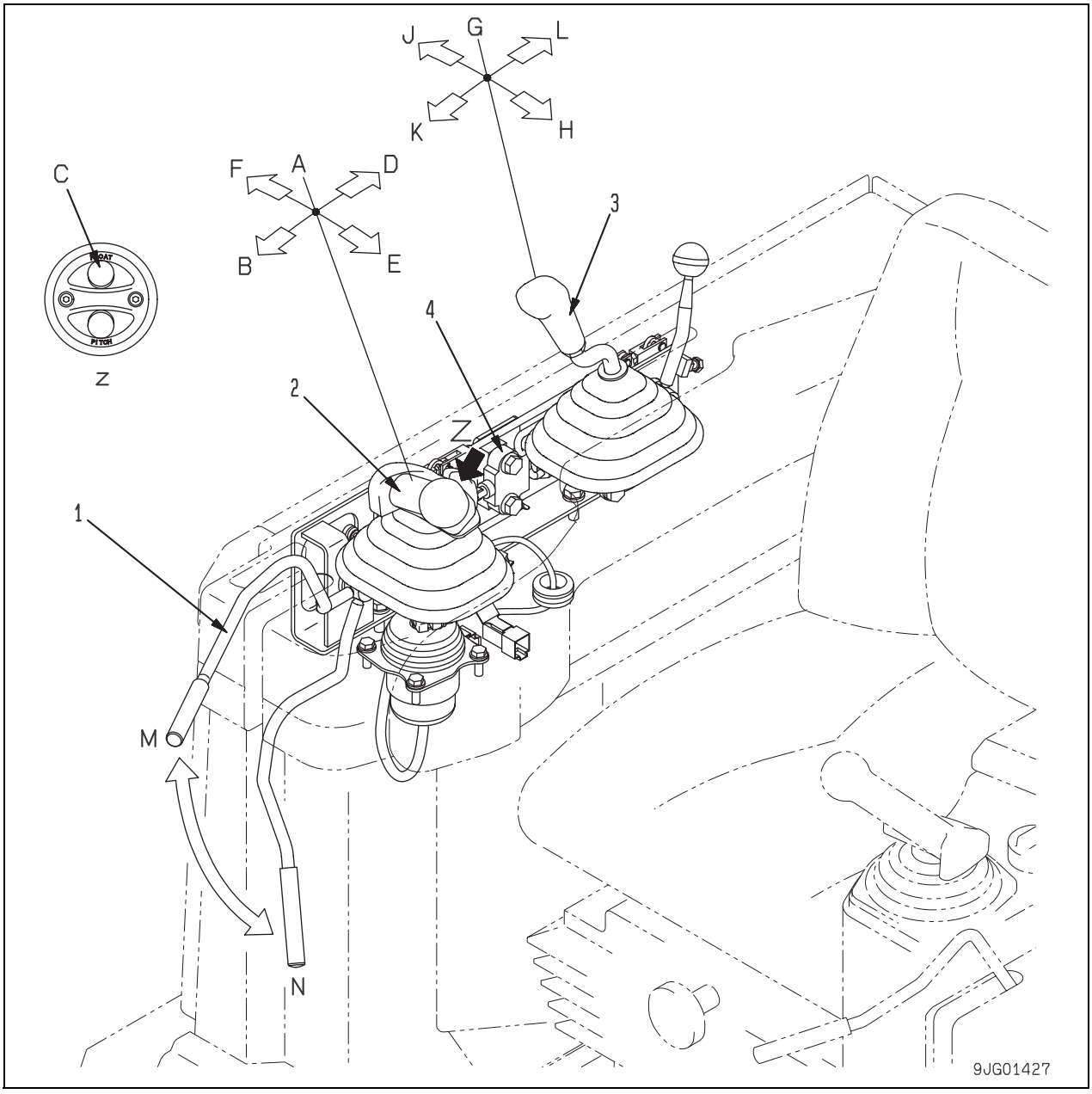

1. Work equipment lock lever
2. Blade control lever
3. Ripper control lever
4. Work equipment lock switch

Lever positions

A : Blade HOLD
B : Blade LOWER
B + C :Blade FLOAT
D : Blade RAISE
E : Blade LEFT TILT
F: Blade RIGHT TILT
G : Ripper HOLD
H : Ripper RAISE
J : Ripper LOWER
K : Ripper DECREASE TIP ANGLE
L : Ripper INCREASE TIP ANGLE
M : FREE
N : LOCK

Outline

- The work equipment control employs a EPC method which uses a EPC valve to move each control valve spool.
- Work equipment lock lever (1) is interconected with work equipment lock switch (4), and at the FREE position, the oil in the EPC circuit is opened.

Hydraulic tank and filter

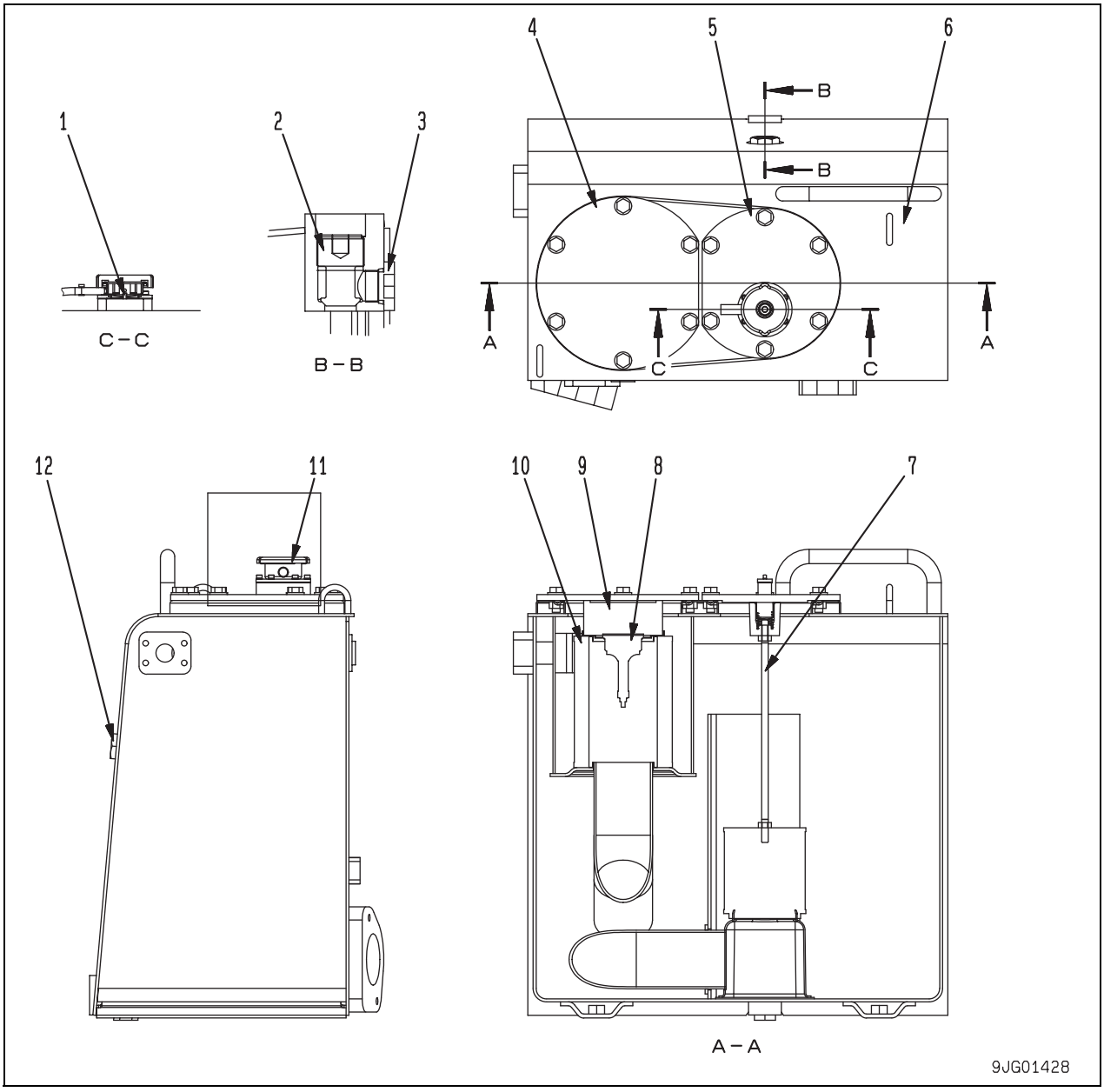

1. Pressure valve
2. Drain valve
3. Drain plug
4. Cover
5. Cover
6. Hydraulic tank
7. Strainer
8. Suction valve
9. Spring
10. Hydraulic filter element
11. Oil filler cap
12. Sight gauge

			Specified value
Hydraulic tank	Tank capacity (ℓ)		125
	Level inside tank	Hi (ℓ)	95
		Center (ℓ)	85
		Low (ℓ)	75
Breather cap	Cracking pressure (kPa {kg/cm²})		16.7±6.9 {0.17±0.07}
	Vacuum valve actuating pressure (kPa {kg/cm²})		0 – 0.49 {0 – 0.005}
Hydraulic filter	Cracking pressure (kPa {kg/cm²})		147±29.4 {1.5±0.31}
	Mesh size (μ m)		20/10/3
	Filtering area (cm²)		13,600
	Filtering oil flow (ℓ/min)		550
Strainer	Mesh size (μ m)		105
	Filtering area (cm²)		1,850

Accumulator

For EPC valve

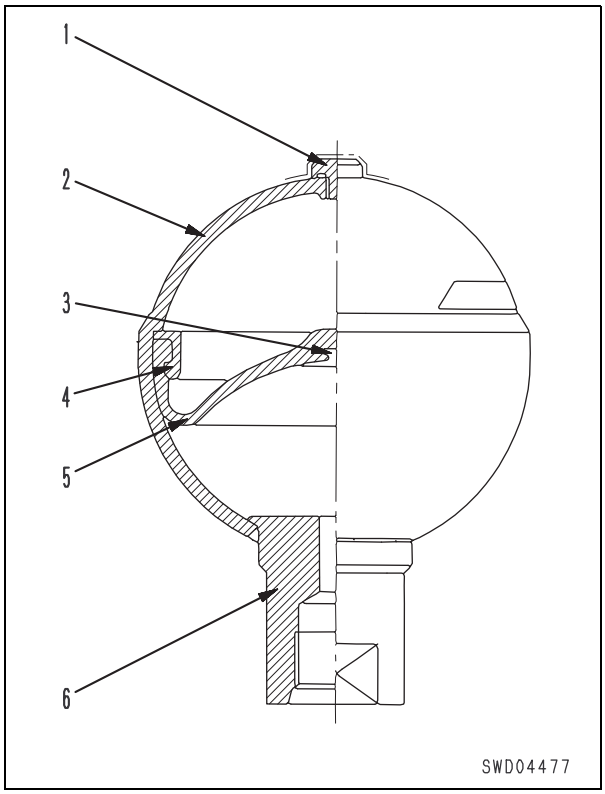

1. Gas plug
2. Shell
3. Poppet
4. Holder
5. Bladder
6. Oil port

Specifications

Type of gas: Nitrogen
Gas volume: 500 cc
Max. actuation pressure: **6.86 MPa {70 kg/cm²}**
Min. actuation pressure: **0.69 MPa {7 kg/cm²}**

Function

- The accumulator is installed between the redusing valve and the EPC valve. Even if the engine is started with the work equipment still raised, the pressure of the nitrogen gas compressed inside the accumulator sends the pilot pressure to the control valve to actuate it and enable the work equipment to move down under its own weight.

Operation

- After the engine is stopped, when the EPC valve is at neutral, chamber (A) inside the bladder is compressed by the oil pressure in chamber (B).
- When the EPC valve is operated, the oil pressure in chamber (B) goes below 2.9 MPa {30 kg/cm²}, and the pressure of the nitrogen gas in chamber (A) expands the bladder, so the oil in chamber (B) acts as the pilot pressure and actuates the main control valve.

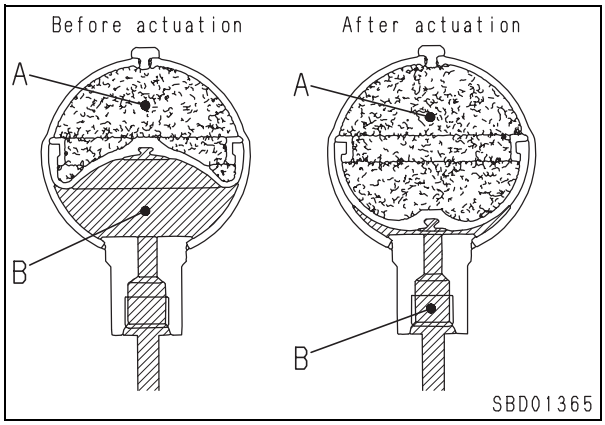

PCCS lever
(For blade, ripper)

★ Do not disassemble.
Otherwise, adjustments will be required for the characteristics of voltage output and operating efforts.

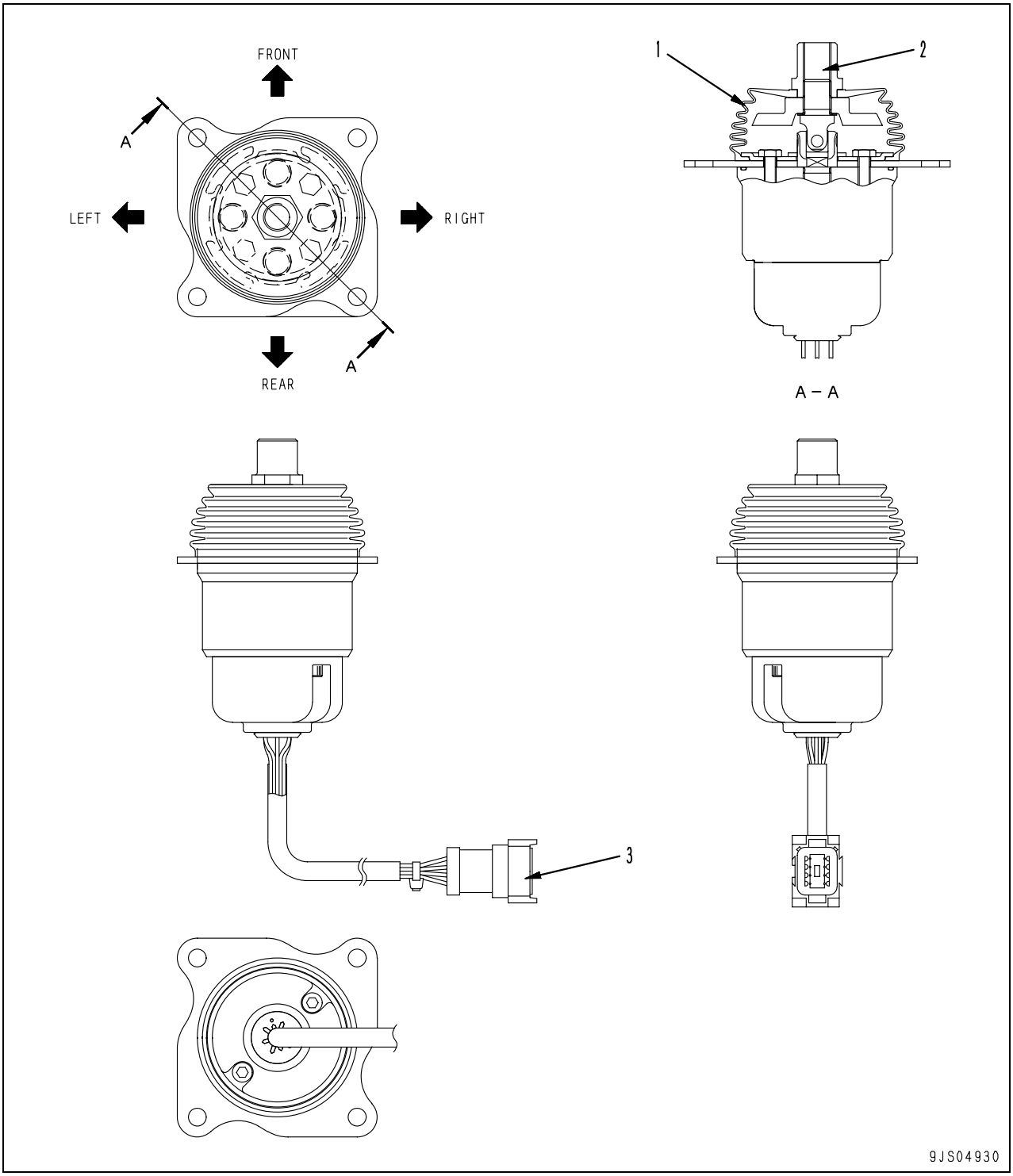

1. Boot
2. Nut
3. Connector

(For steering)

★ Do not disassemble.
Otherwise, adjustments will be required for the characteristics of voltage output and operating efforts.

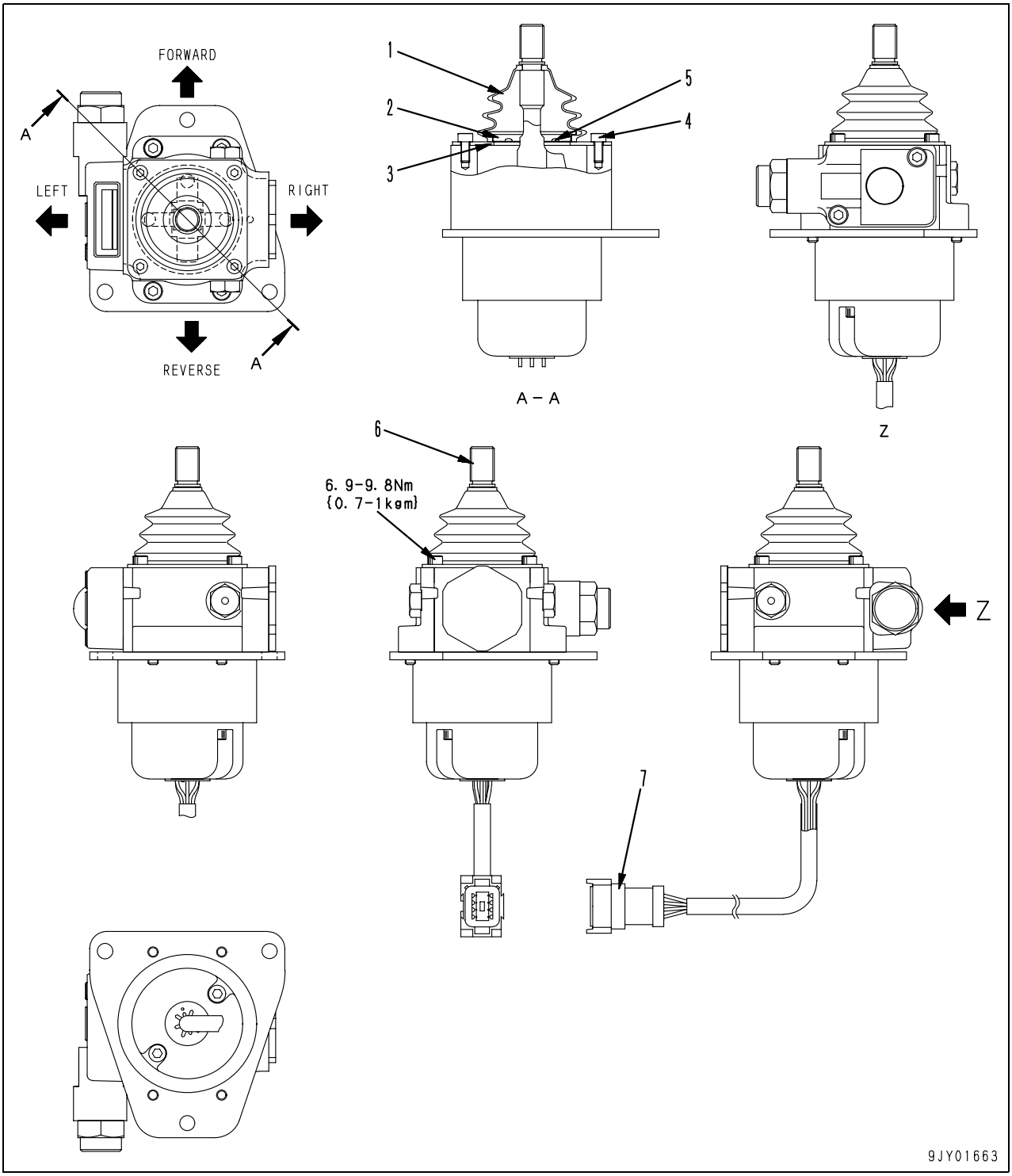

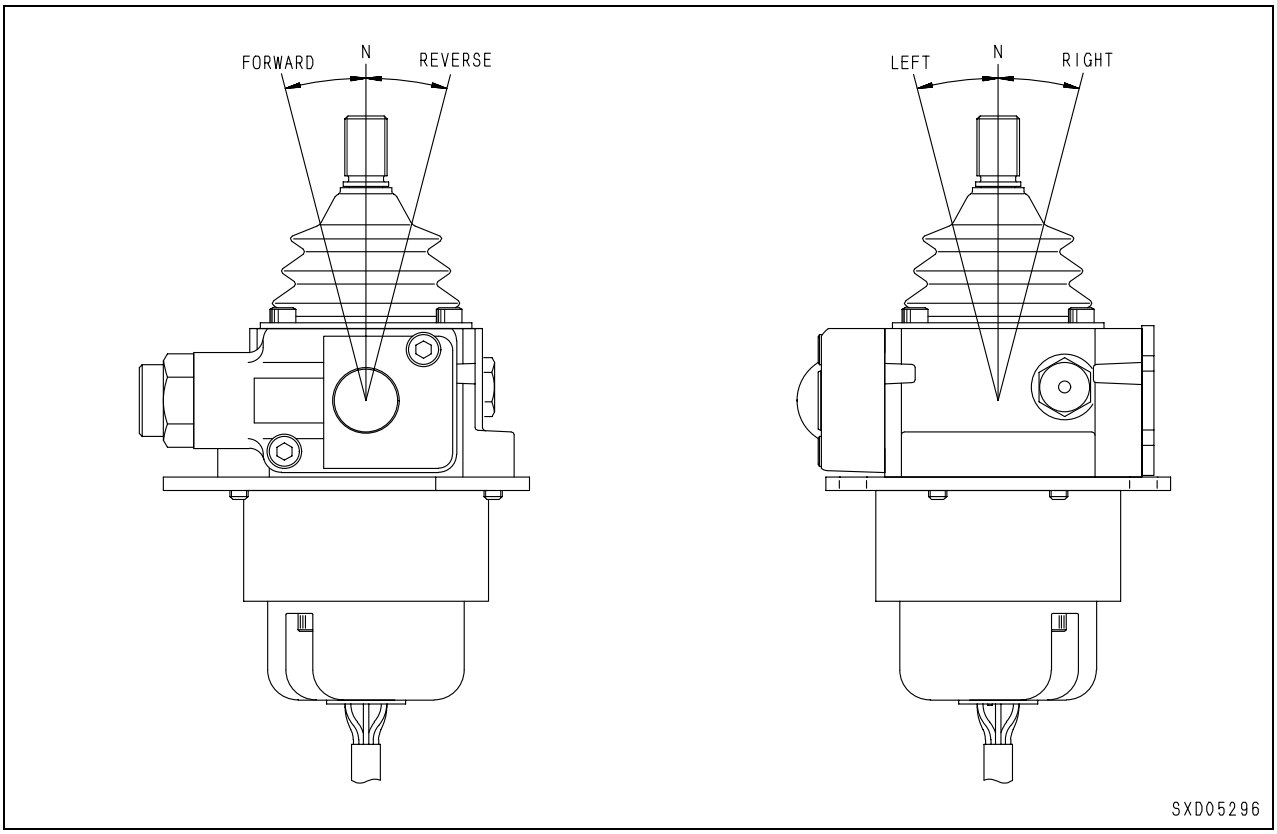

Function

1. Operating effort characteristics (For blade and ripper)

- It has the following characteristic for both longitudinal and lateral operations.
- Free return (operation effort characteristic diagram)

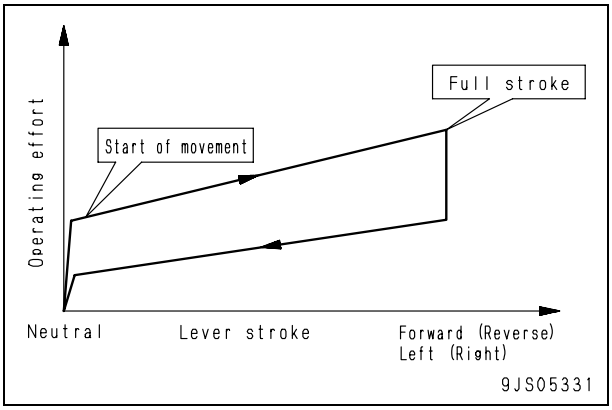

(For steering)

1) Operation for forward and reverse travel

- The control lever is held at 3 positions: “forward“, “neutral“ and “reverse“.

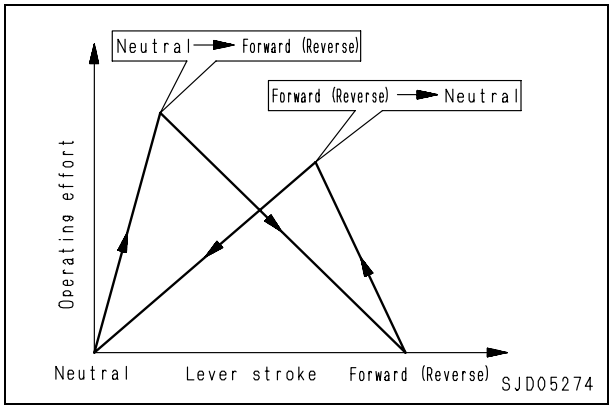

2) Operation for left and right steering

- Free return

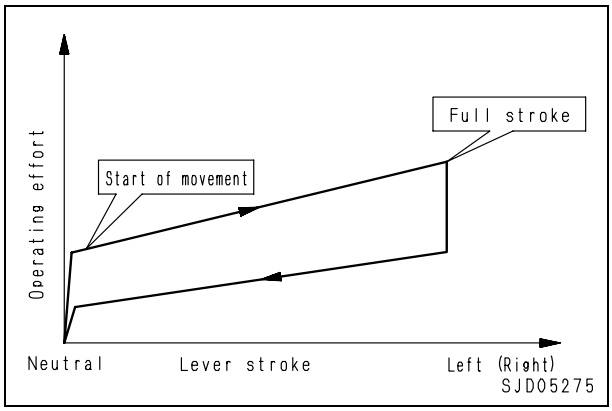

2. Output voltage characteristics

- The control unit is installed to the left control stand and the control lever is installed directly onto it.
- The operating angle (stroke) of the control levers sensed with potentiometers and signal voltages are output to the transmission, steering controller.
- A potentiometer is installed in each of longitudinal direction and lateral direction. Each potentiometer outputs 2 signal voltages which are opposite to each other as shown in the figure at right.

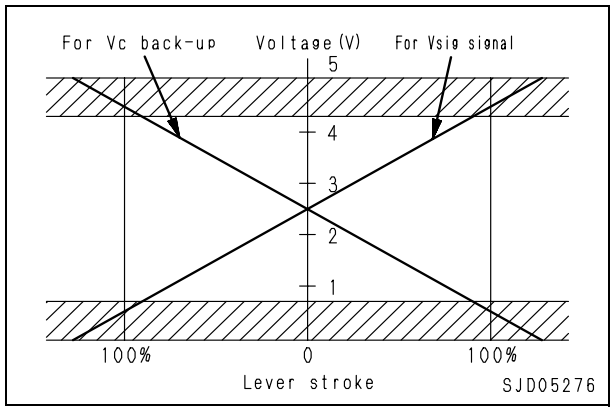

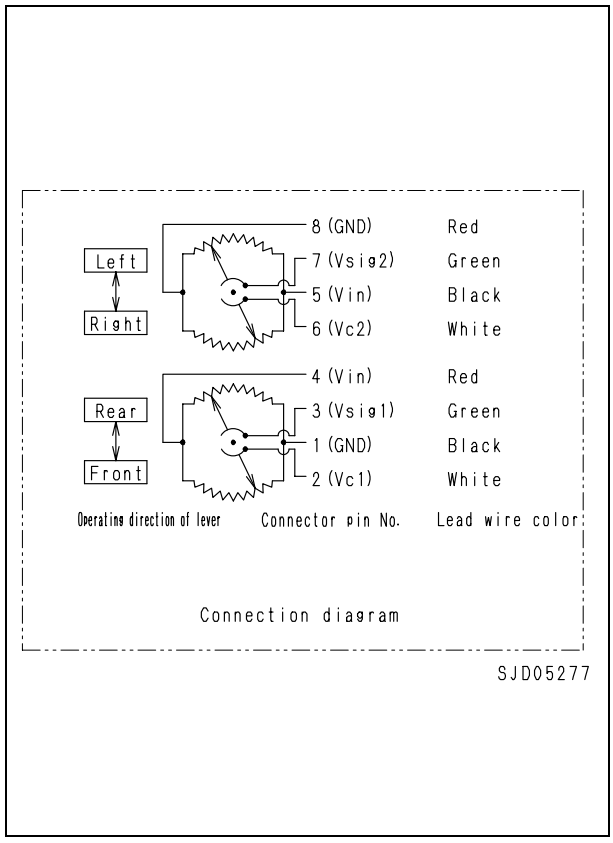

Work equipment lock valve

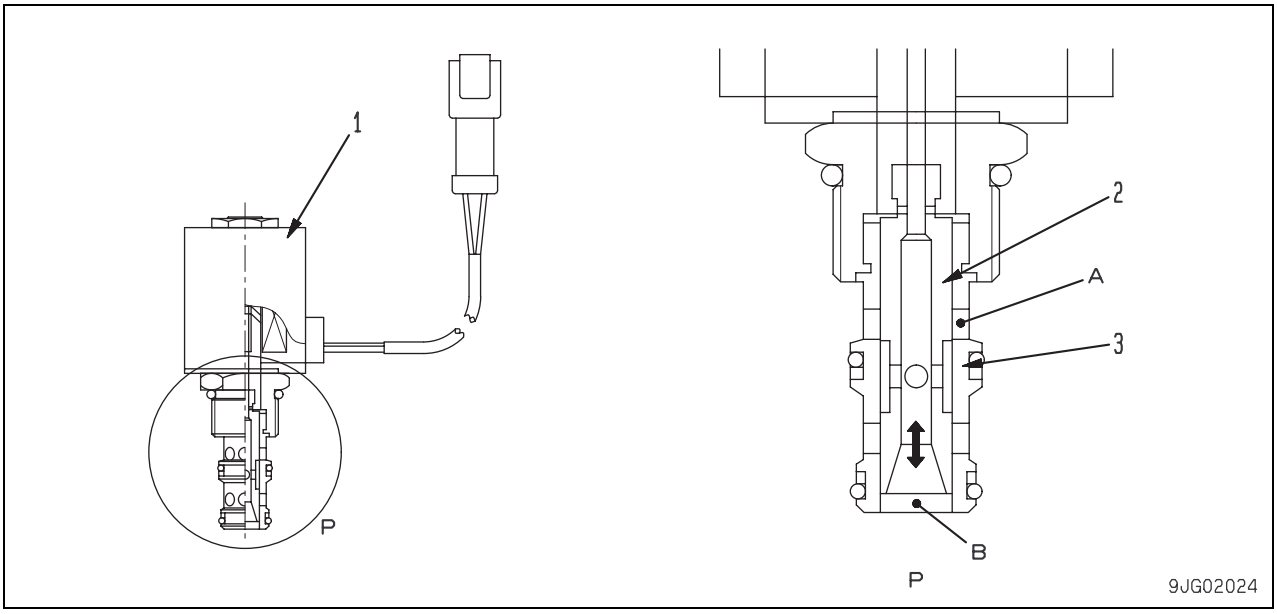

1. Solenoid
2. Body
3. Spool

Outline

- The work equipment lock valve is installed between the basic pressure valve and control valve in the work equipment control circuit. If the work equipment lock lever is set in the FREE position, the work equipment lock switch operates and the work equipment lock valve opens the work equipment control circuit so that the operator can operate the work equipment.

Operation

- The solenoid is operated by the electric signal to move the spool. As a result, the circuit between port (A) connected to the basic pressure valve and port (B) connected to the control valve is opened.

Control valve

Outline

- This manual explains the 5-spool valve (single tilt specification) and 6-spool valve (dual tilt specification).

A1: To HSS motor
A2: To blade tilt cylinder head
A3: To blade lift cylinder head
A4: To ripper cylinder head
A5: To ripper tilt cylinder bottom
B1: To HSS motor
B2: To blade tilt cylinder bottom
B3: To blade lift cylinder bottom
B4: To ripper lift cylinder bottom
B5: To ripper tilt cylinder head
IA1: Connector (from controller)
IA2: Connector (from controller)
IA3: Connector (from controller)
IA4: Connector (from controller)
IA5: Connector (from controller)
IB1: Connector (from controller)
IB2: Connector (from controller)
IB3: Connector (from controller)
IB4: Connector (from controller)
IB5: Connector (from controller)
LS: To pump LS valve
P: Pump port
PC: Pump pressure pickup port plug
PEPC1: EPC valve basic pressure input port (from self pressure reducing valve)
PEPC2: EPC valve basic pressure input port (from self pressure reducing valve)
T: Drain port
TS: To tank

1. EPC valve

Outside view

5-spool valve (single tilt specification)

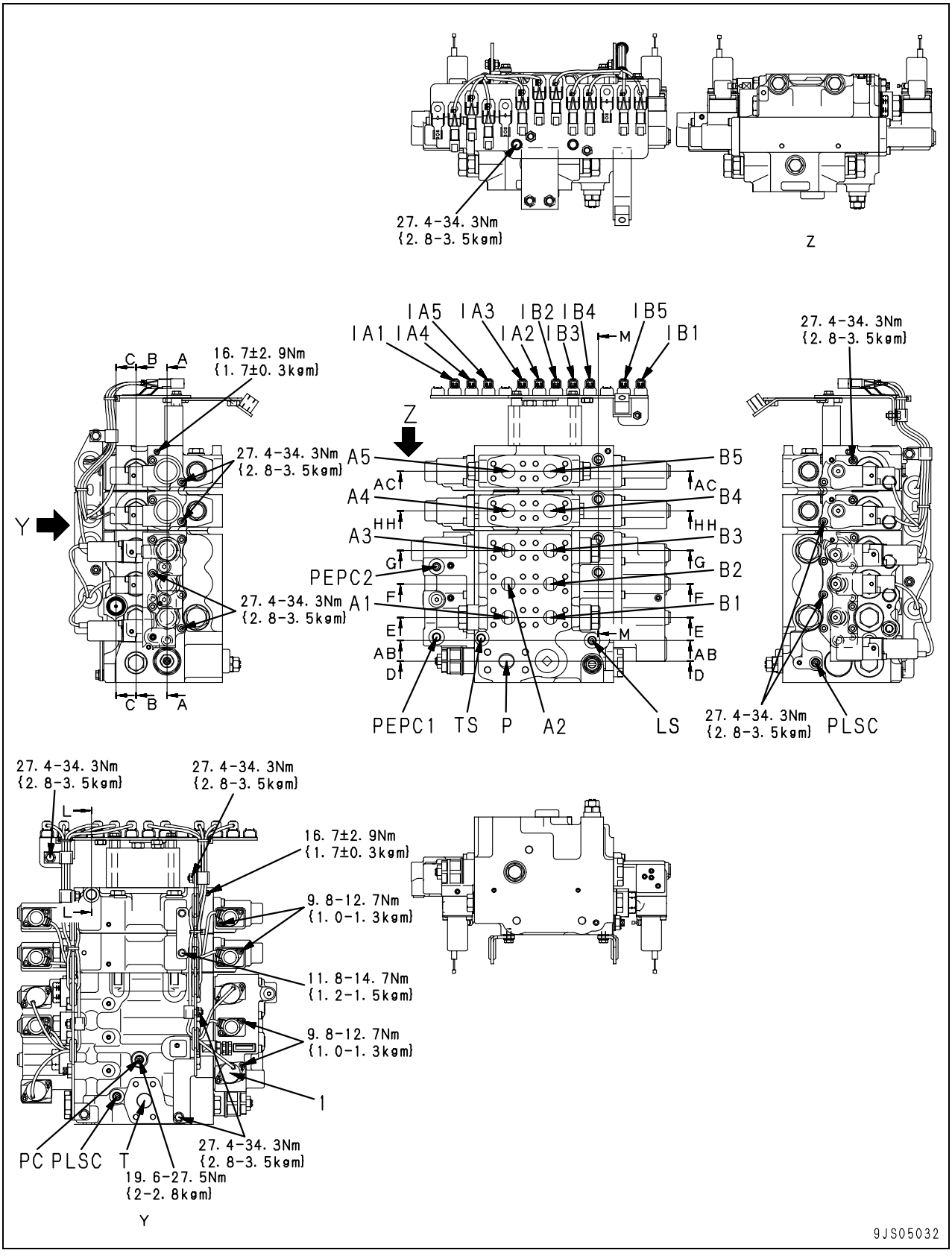

A1: To HSS motor
A2: To blade tilt cylinder head
A3: To blade lift cylinder head
A4: To blade tilt cylinder head
A5: To ripper cylinder head
A6: To ripper tilt cylinder bottom
B1: To HSS motor
B2: To blade tilt cylinder bottom
B3: To blade lift cylinder bottom
B4: To blade ripper cylinder bottom
B5: To ripper lift cylinder bottom
B6: To ripper tilt cylinder head
IA1: Connector (from controller)
IA2: Connector (from controller)
IA3: Connector (from controller)
IA4: Connector (from controller)
IA5: Connector (from controller)
IA6: Connector (from controller)
IB1: Connector (from controller)
IB2: Connector (from controller)
IB3: Connector (from controller)
IB4: Connector (from controller)
IB5: Connector (from controller)
IB6: Connector (from controller)
LS: To pump LS valve
P: Pump port
PC: Pump pressure pickup port plug
PEPC1: EPC valve basic pressure input port (from self pressure reducing valve)
PEPC2: EPC valve basic pressure input port (from self pressure reducing valve)
T: Drain port
TS: To tank

1. EPC valve

6-spool valve (dual tilt specification)

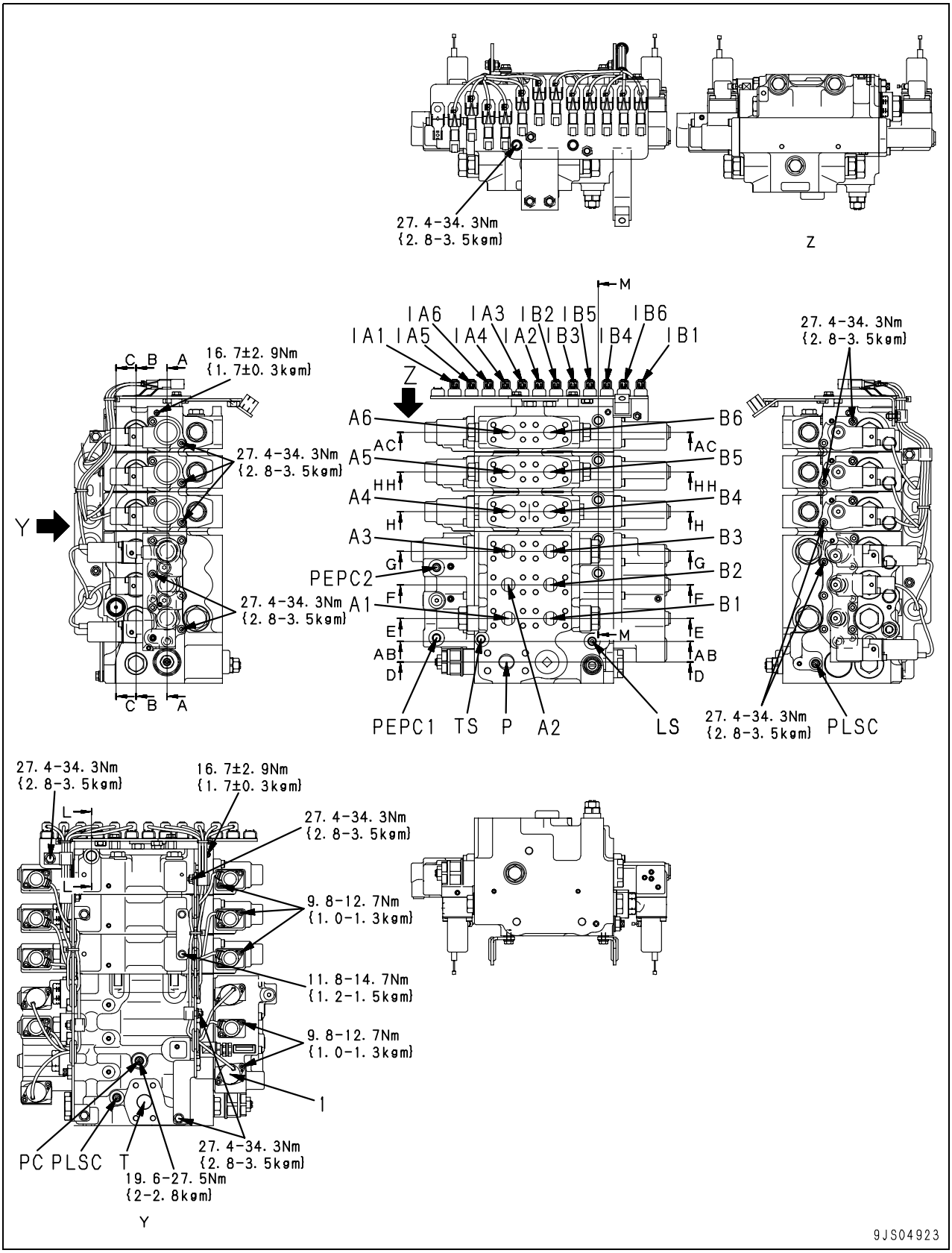

Sectional view

(1/8)

5-spool valve

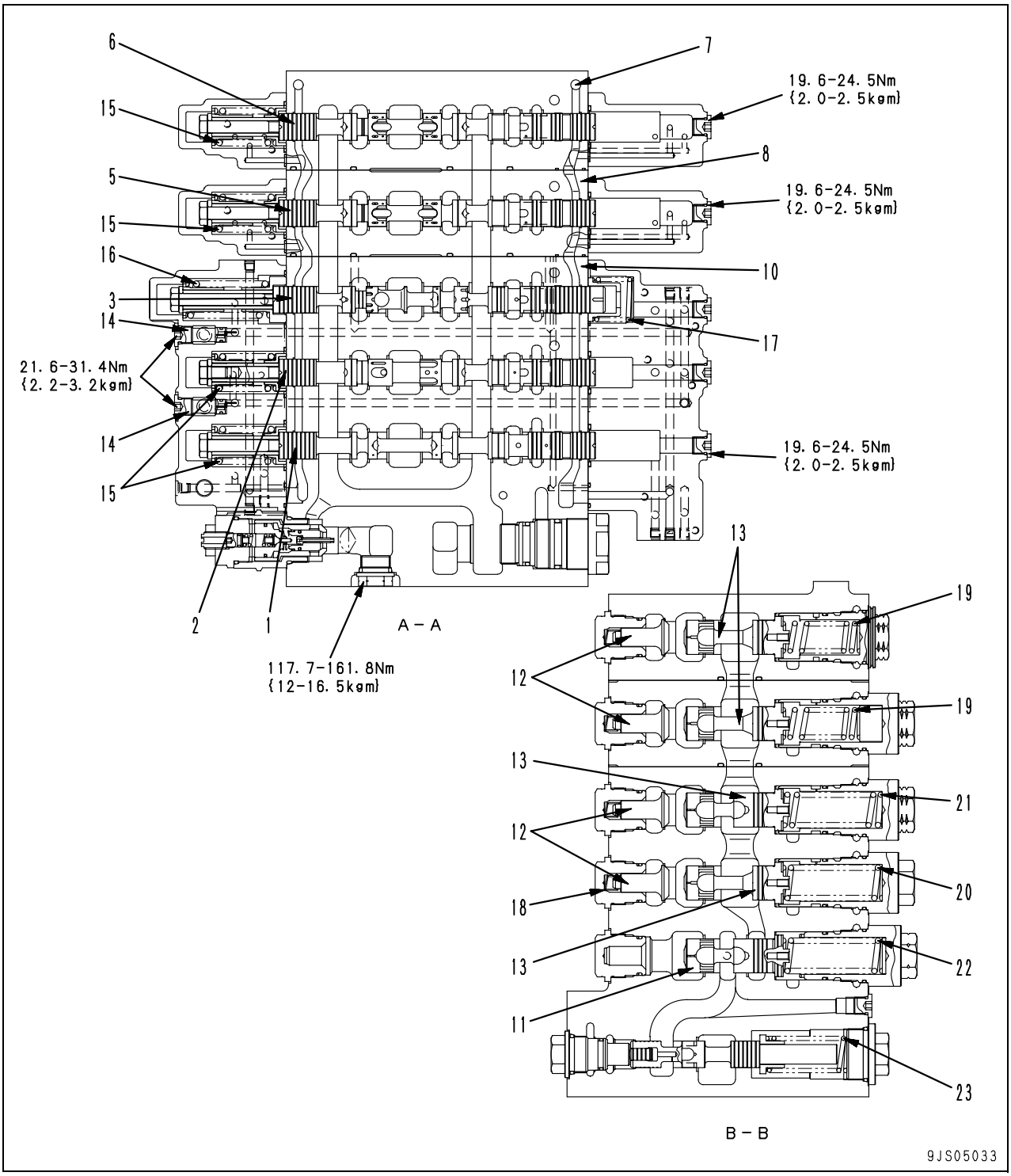

(2/8)
6-spool valve

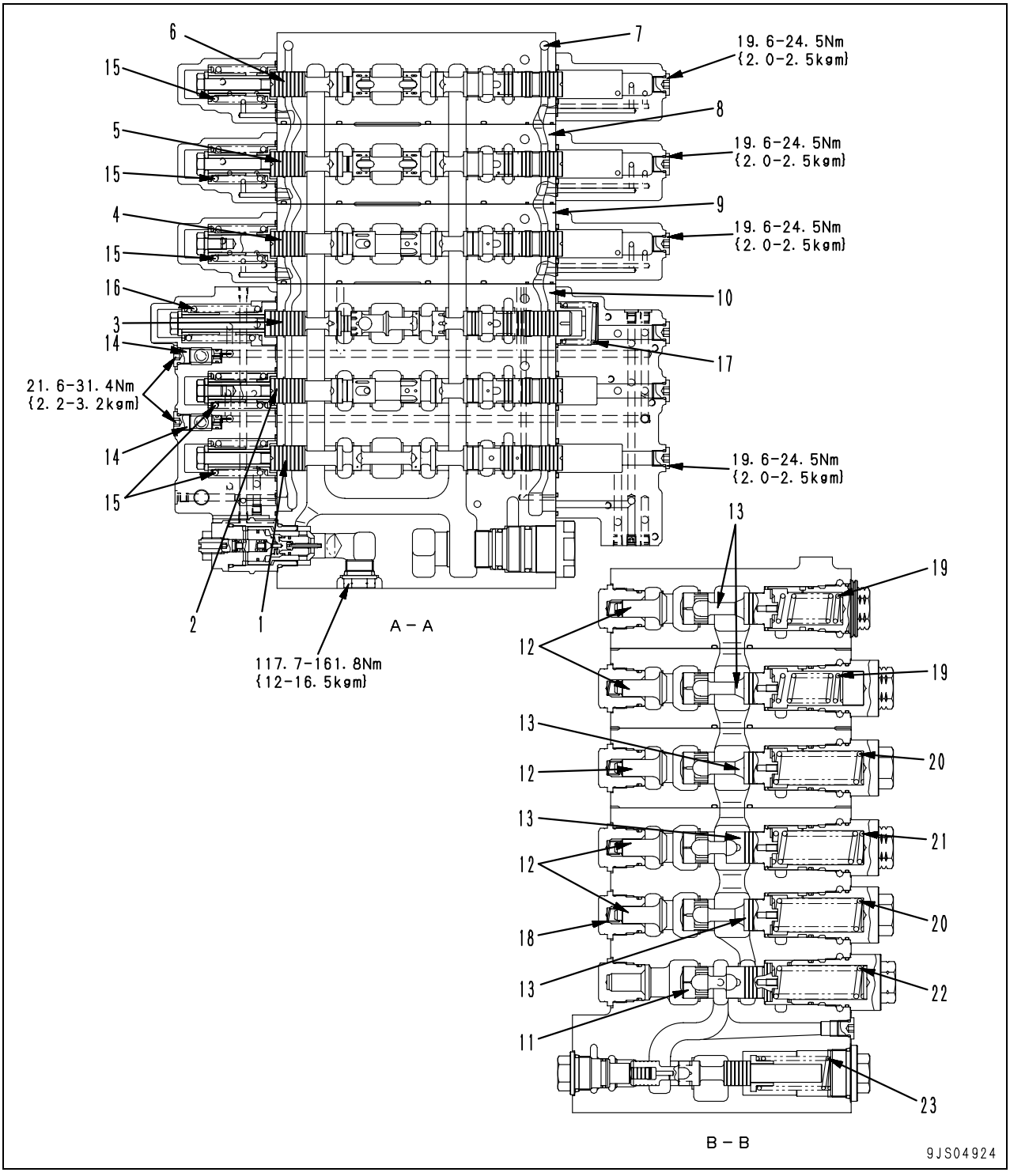

1. Steering spool
2. Blade tilt spool
3. Blade lift spool
4. Blade tilt (pitch) spool (only for 6-spool valve)
5. Ripper lift spool
6. Ripper tilt spool
7. Valve block (only for 6-spool valve)
8. Valve block
9. Valve block
10. Valve body
11. Steering priority valve
12. Load check valve
13. Pressure compensation valve
14. Filter

Unit: mm

No.	Check item	Criteria					Remedy
		Standard size			Repair limit		
15	Spool return spring	Free length x outer diameter	Installation length	Installation load	Free length	Installation load	
		51.7 x 31.3	50	140 N {14.3 kg}	—	112 N {11.4 kg}	
16	Spool return spring	76.3 x 30	68.5	224 N {22.8 kg}	—	179 N {18.2 kg}	
17	Spool return spring	54.7 x 36.5	33.5	217 N {22.1 kg}	—	173 N {17.7 kg}	
18	Load check valve spring	20.8 x 12.2	13.5	12.7 N {1.3 kg}	—	10.2 N {1.04 kg}	Replace spring if damaged or deformed.
19	Pressure compensation valve spring	67.04 x 26.5	62.5	468 N {47.7 kg}	—	374 N {38.2 kg}	
20	Pressure compensation valve spring	108.3 x 29.5	81	562 N {57.3 kg}	—	450 N {45.8 kg}	
21	Pressure compensation valve spring	97.7 x 29.5	81	453 N {46.2 kg}	—	362 N {37 kg}	
22	Pressure compensation valve spring	109.4 x 29.5	81	563 N {57.4 kg}	—	450 N {45.9 kg}	
23	Unload valve spring	86.7 x 30	66	192 N {19.6 kg}	—	154 N {15.7 kg}	

(3/8)
5-spool valve

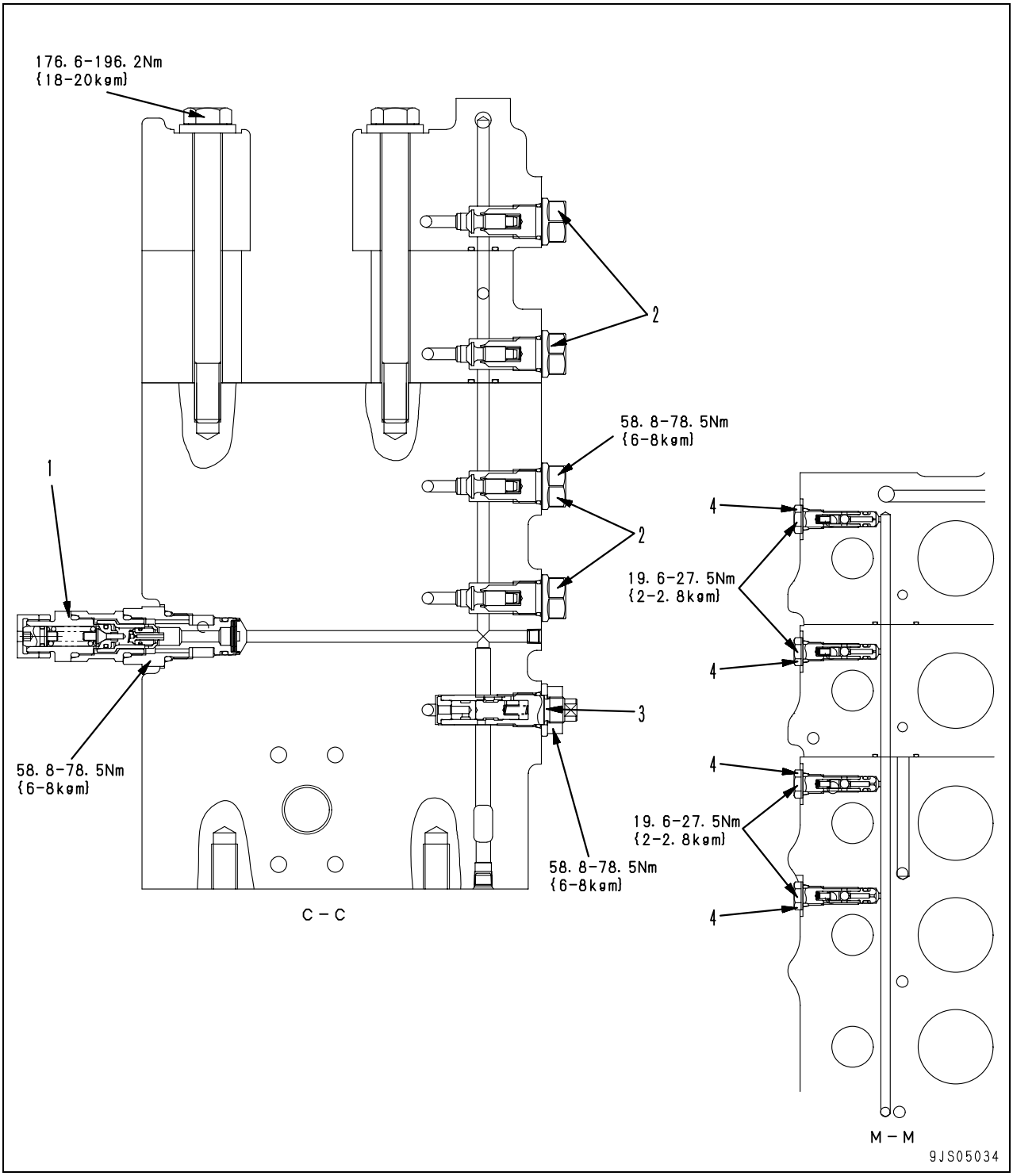

1. LS relief valve (for work equipment valve)
2. LS check valve (for work equipment valve)
3. LS check valve (for steering valve)
4. Preset check valve

(4/8)

6-spool valve

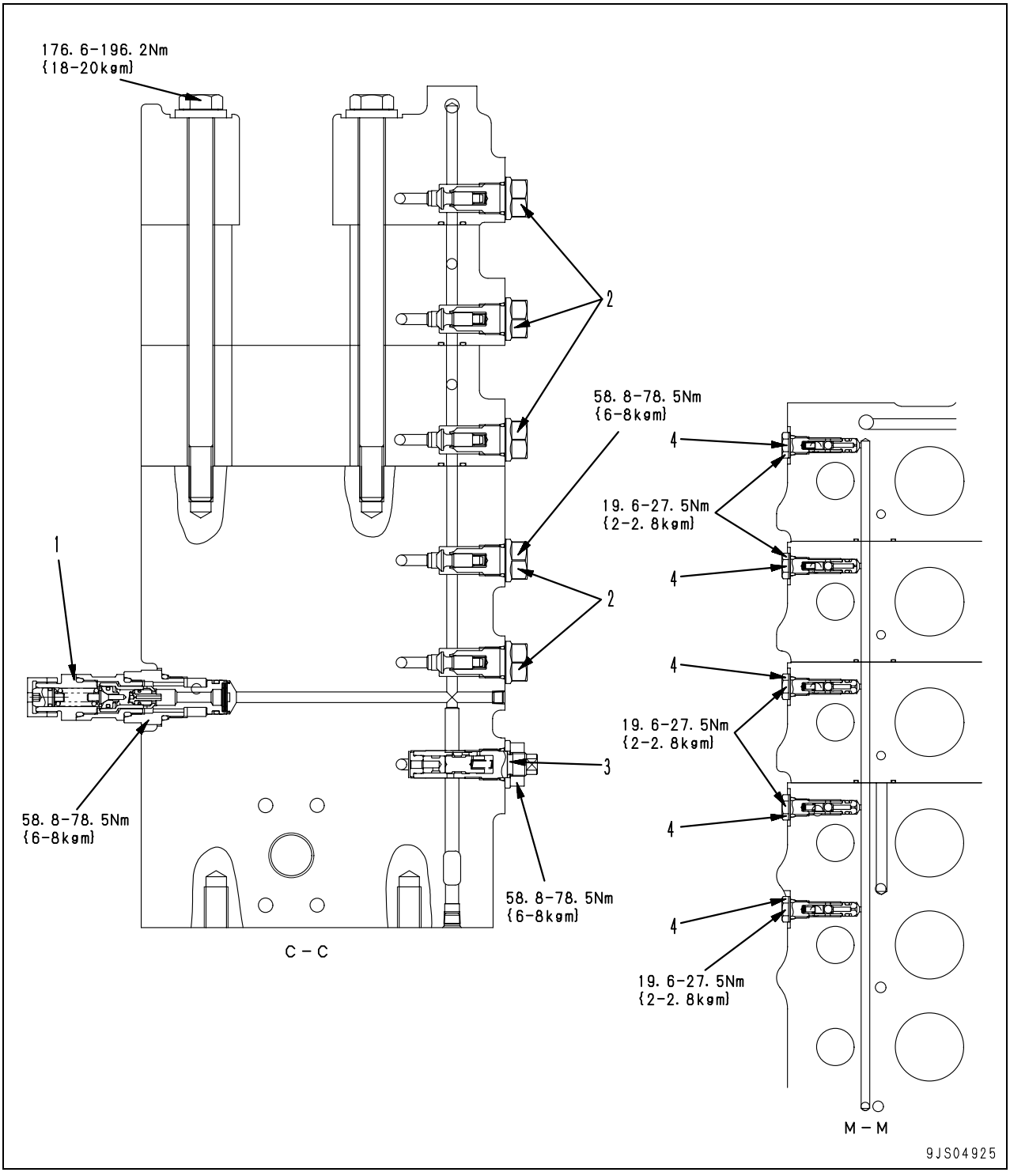

1. LS relief valve (for work equipment valve)
2. LS check valve (for work equipment valve)
3. LS check valve (for steering valve)
4. Preset check valve

(5/8)

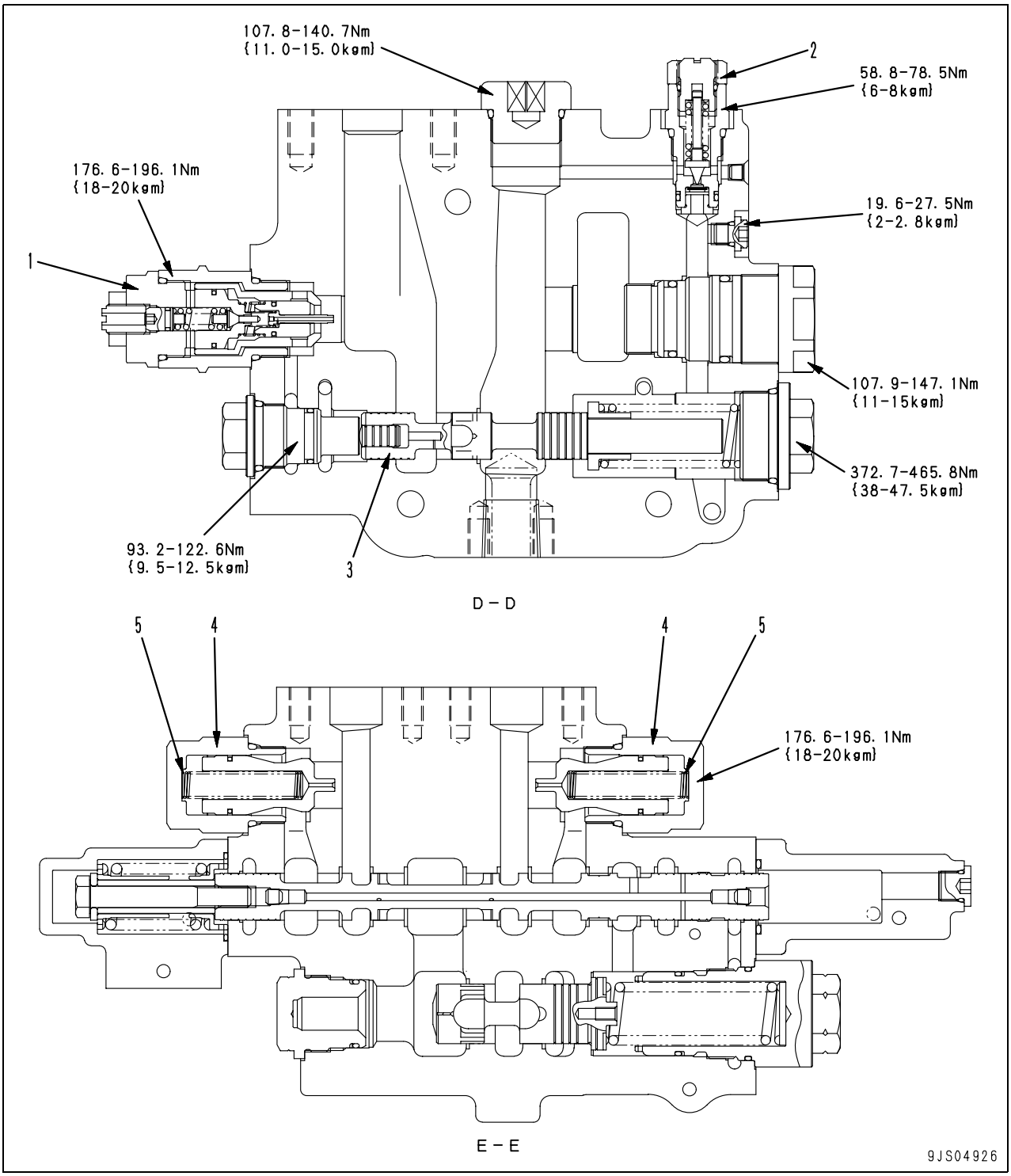

1. Main relief valve
2. LS relief valve (for steering valve)
3. Unload valve
4. Suction valve

Unit: mm

No.	Check item	Criteria					Remedy
		Standard size			Repair limit		
5	Suction valve spring	Free length x outer diameter	Installation length	Installation load	Free length	Installation load	Replace spring if damaged or deformed.
		64.9 x 12.5	56	6.4 N {0.65 kg}	—	5.1 N {0.52 kg}	

(6/8)

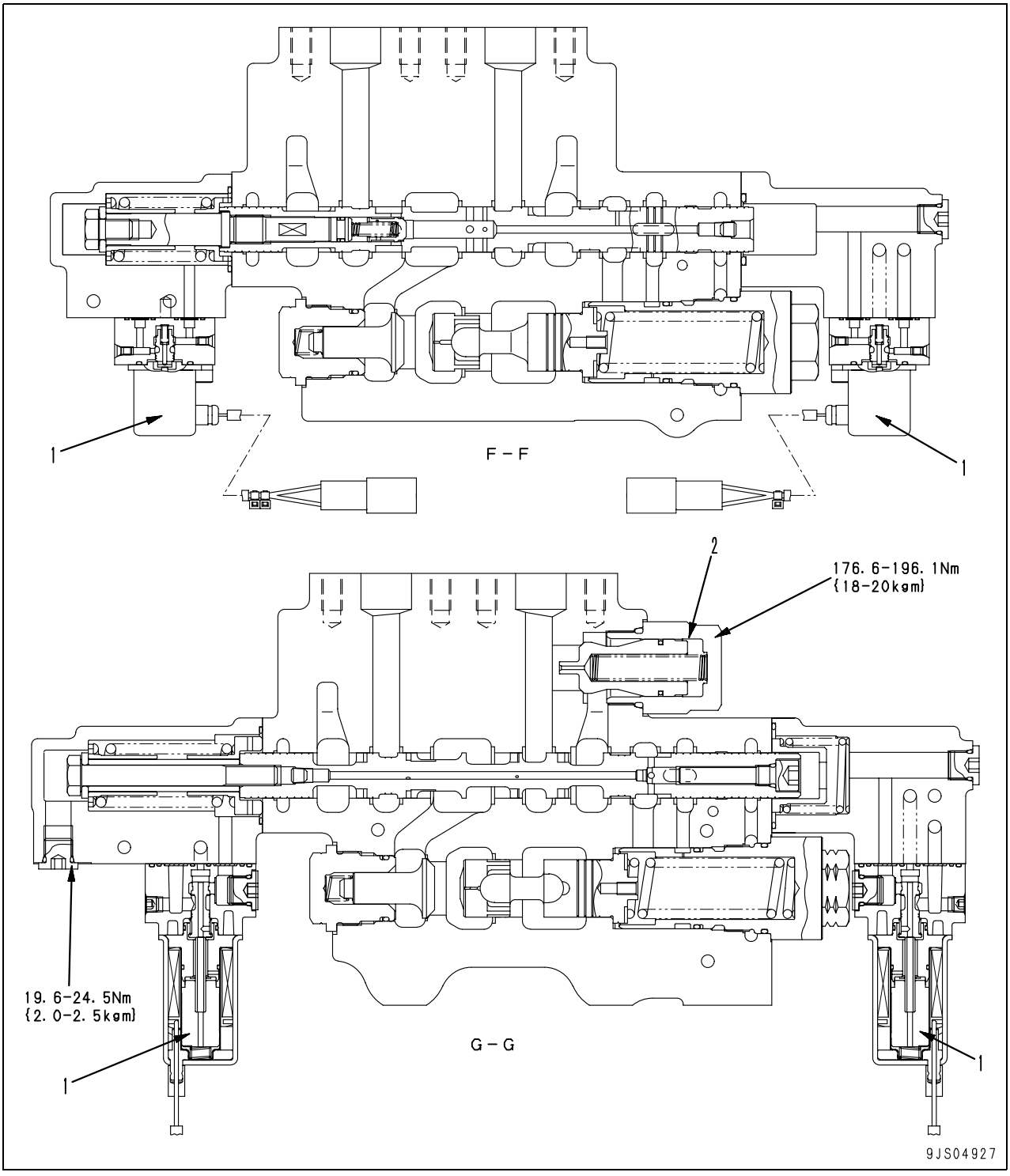

★ Suction valve spring is the same as section E-E.

1. EPC valve
2. Suction valve

(7/8)

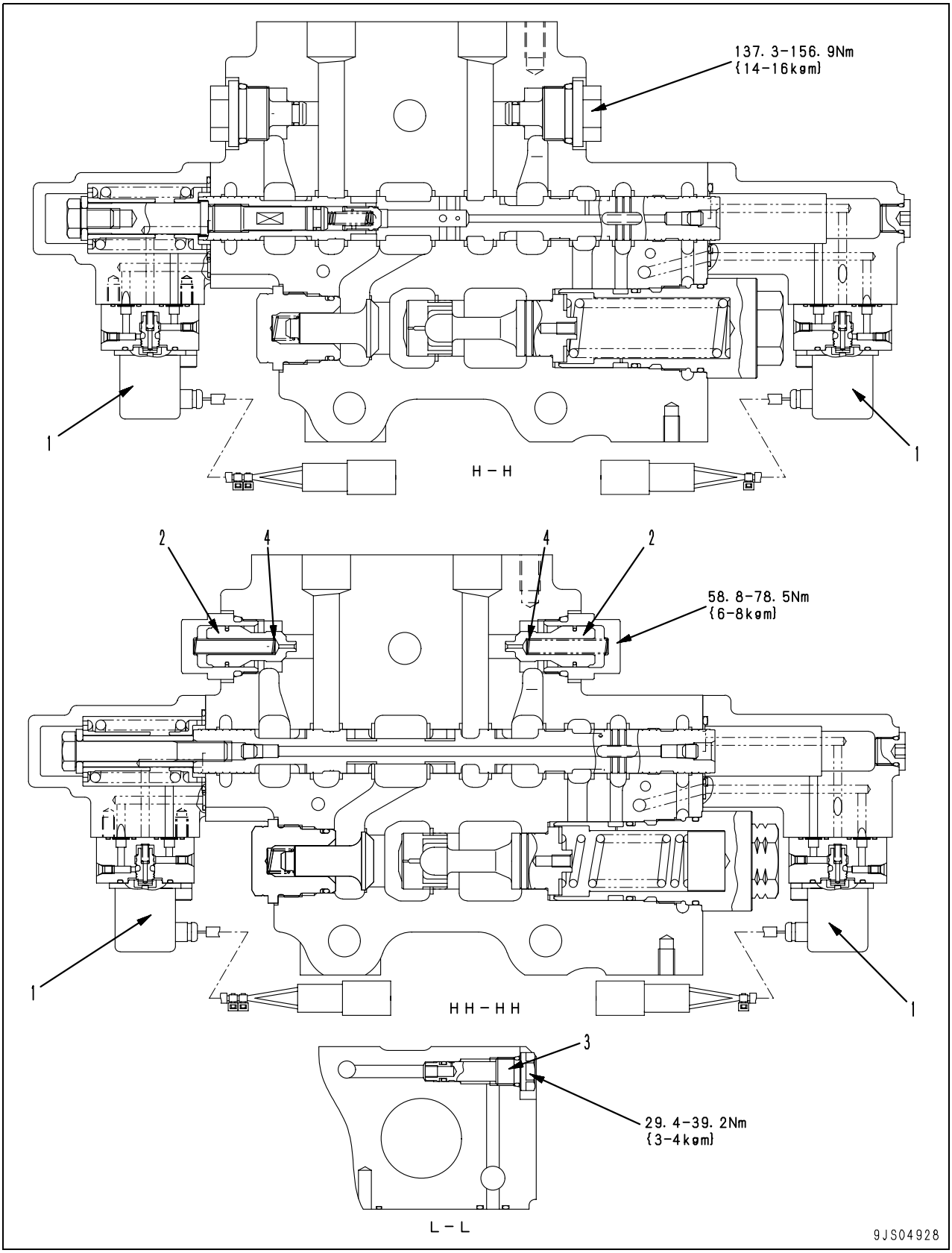

★ Section H-H is only for 6-spool valve.

1. EPC valve
2. Suction valve
3. LS bypass valve

Unit: mm

No.	Check item	Criteria					Remedy
		Standard size			Repair limit		
4	Suction valve spring	Free length x outer diameter	Installation length	Installation load	Free length	Installation load	Replace spring if damaged or deformed.
		46.8 x 7.5	40.6	5.49 N {0.56 kg}	—	4.41 N {0.45 kg}	

(8/8)

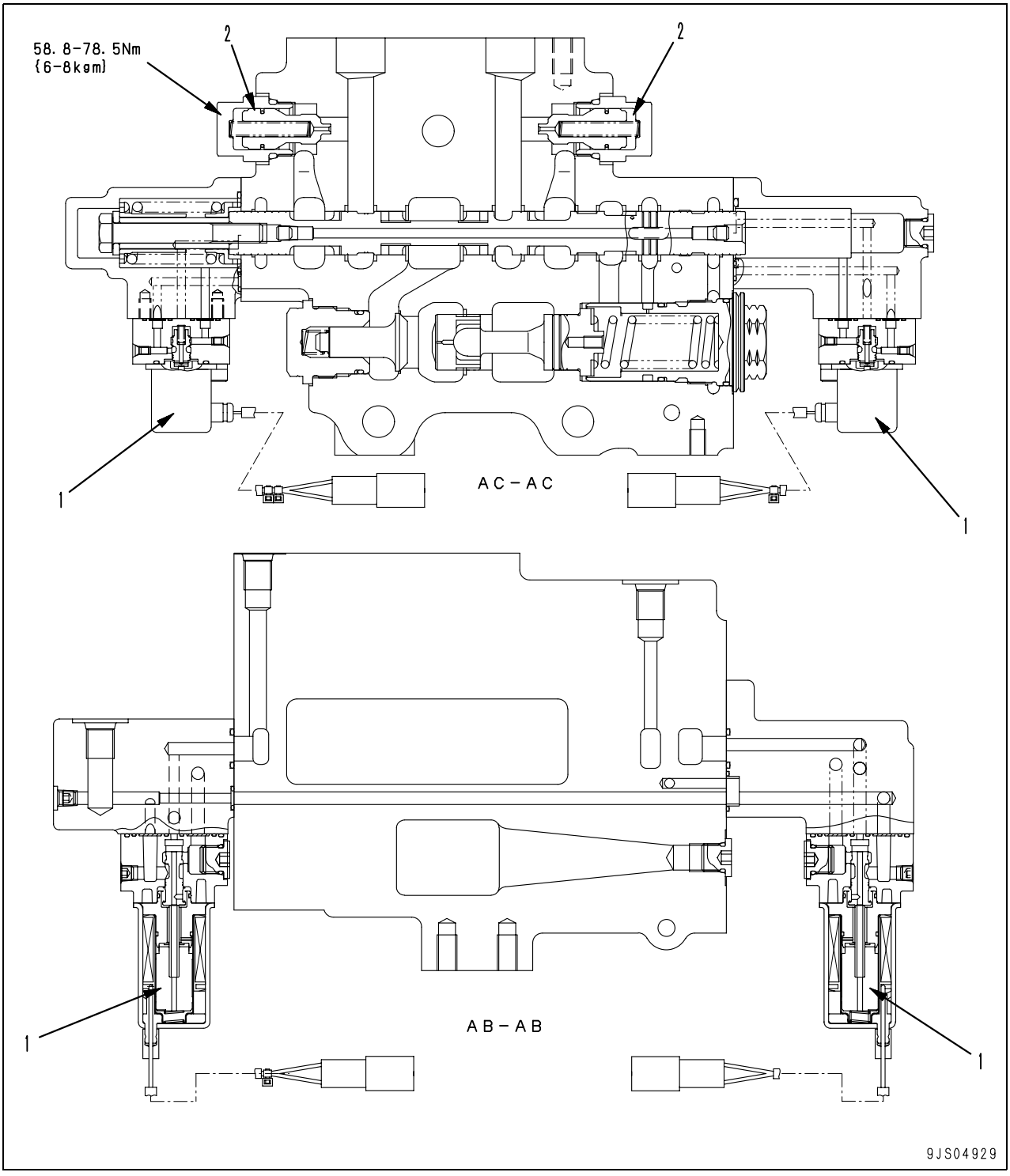

★ Suction valve spring is the same as section HH-HH.

1. EPC valve
2. Suction valve

Operation of control valve

At “hold“ (operation of unload valve)

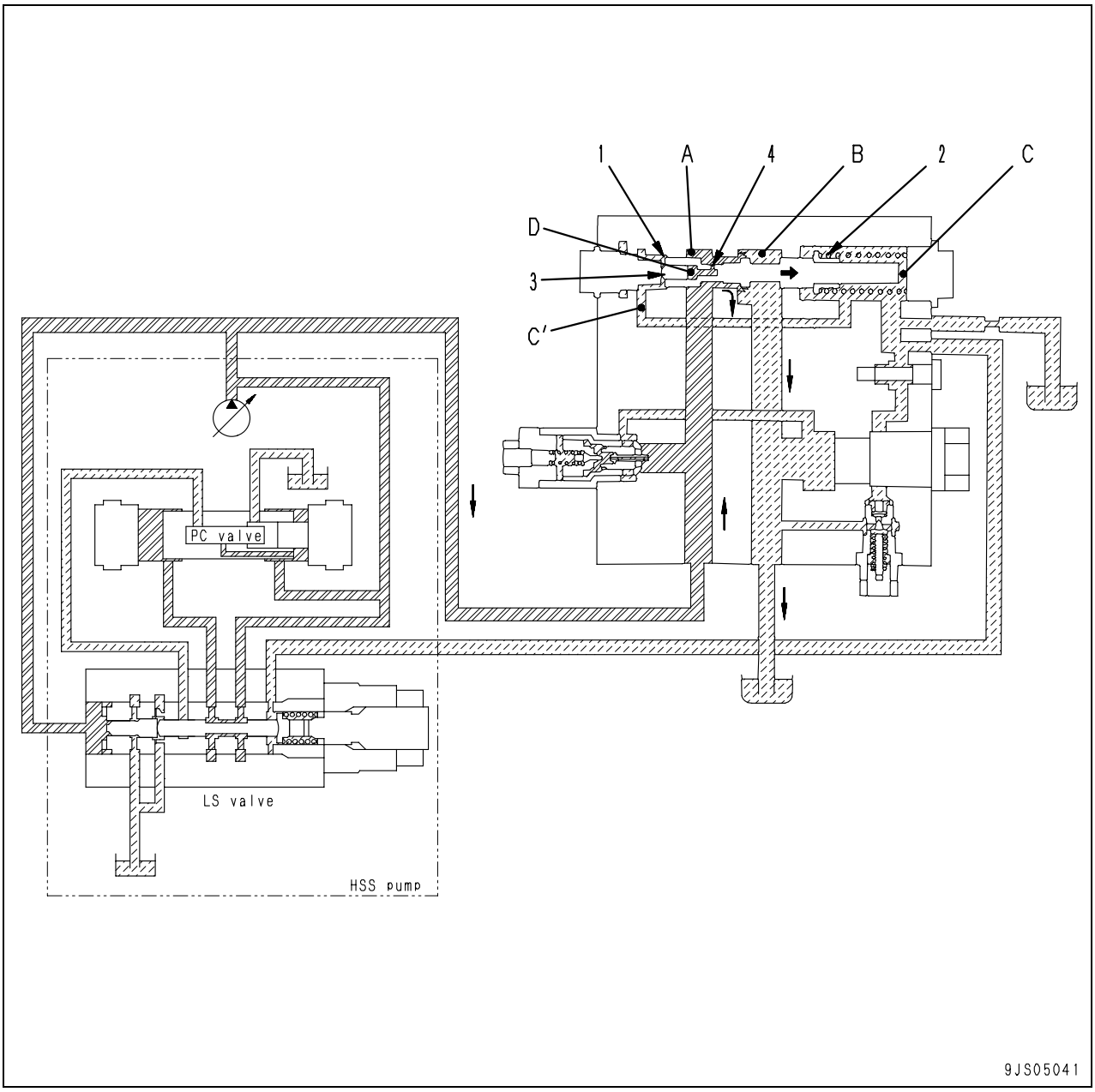

Function

- When the main spool (1) is at the “hold“ position, it drains the excess oil discharged by the pump, and prevents the pressure from being formed in the circuit from rising.

Operation

- When the main spool (1) is at the “hold“ position, the pump discharge pressure passes from chamber A through throttle (4) to chamber (D).Chambers (C') and (C) are connected to the drain circuit.
- When the pressurized oil is supplied from the pump, the pressure in chamber (D) rises, and main spool (1) is pushed to the right by pressure which is determined by the cross-sectional area of piston (3) receiving the pressure.
- When the received pressure becomes larger than set load of spring (2), the main spool (1) moves to the right and connects the passage between chamber (A) and chamber (B), so the oil from the pump is drained.
- Main spool (1) is balanced at a position that matches the supply of oil from the pump.
- Actually, the amount of oil supplied from the pump is small, so the pressure in the circuit is almost the same as the set load of spring (2).

Control of oil flow

1. Steering valve
1) At “hold“

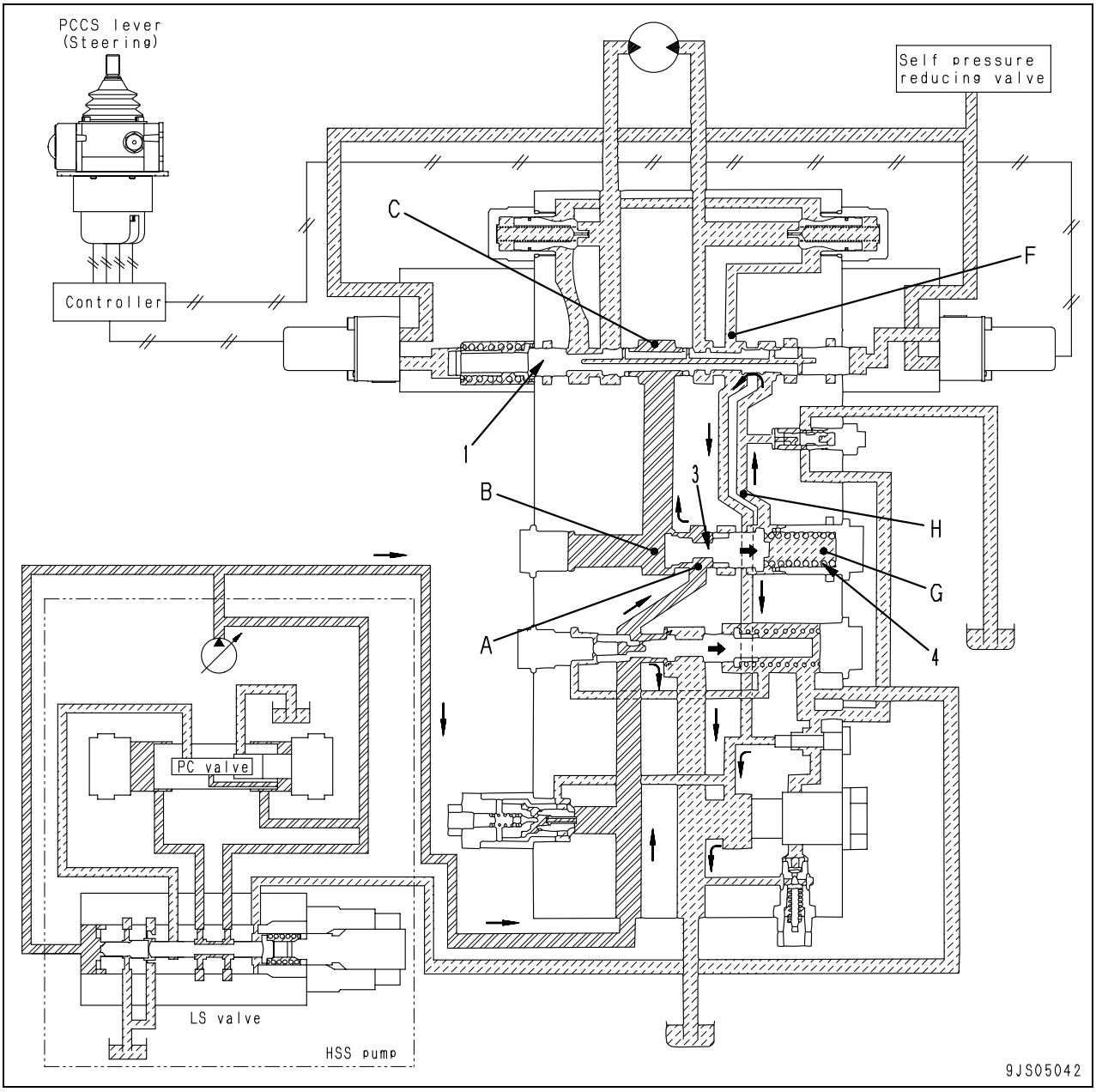

Function

- Use of the CLSS circuit (Closed Center Load Sensing System) makes it possible to control the oil flow by adjusting the area of opening of the spool driven by the EPC valve regardless of the load.

Operation

- When the steering spool (1) is at the “hold“ position, the pump discharge pressure is sent from chamber (A) through the notch in spool (3) of the steering priority valve, and passes through chamber (B) to chamber (C).
- Chamber (G) is drained through chamber (H) to chamber (F).
- Since the pump discharge pressure is acting on the left end of spool (3) of the steering priority valve, it compresses spring (4) and moves to the right to the maximum stroke position.
- In this condition, the area of the opening to steering spool (1) is at its minimum.

2) When steering to the left

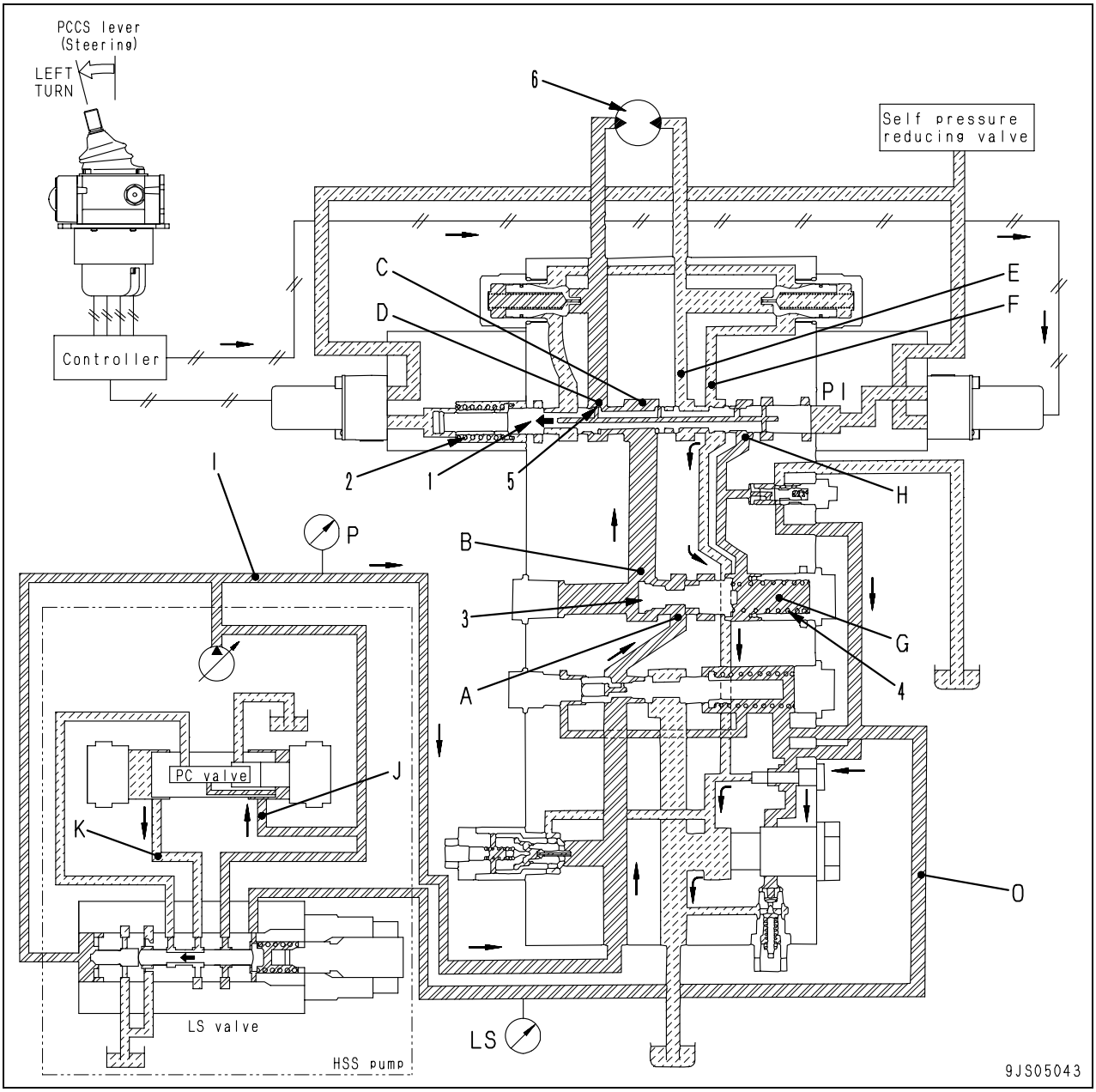

- ΔPLS = Differential pressure between ports (K) and (J) = 2.0 MPa {20 kg/cm²}
- ΔPLS' = Differential pressure between ports I and D
- ΔPLS ≒ ΔPLS'

Operation

- When the PCCS lever is operated to turn the machine to the ÒleftÒ, pilot pressure (PI) acts on the right end of steering spool (1) through the EPC valve.
- When the pressure becomes greater than the set load of spring (2), the steering spool (1) moves to the left. It becomes balanced at a position that matches pilot pressure (PI).
- Chamber (C) and chamber (D) are connected, and the oil from the pump flows through ports (A), (B), (C) and (D) to HSS motor (6).
- At the same time, the load pressure in chamber (D) passes through LS orifice (5) and chamber (H), and is sent to chamber (G). It is also sent from LS circuit (O) to pump LS valve.
- The condition of the pressure of pressure compensation valve spool (3) is chamber (B) pressure ≒ chamber (C) pressure, and chamber (G) pressure C chamber (D) pressure, so pressure compensation spool (3) is controlled by the differential pressure of steering spool (1) (chamber (C) pressure - chamber (D) pressure), and balances with spring (4).

- If the oil flow is too large, the differential pressure of steering spool (1) becomes larger, so pressure compensation valve spool (3) moves in the direction to throttle the oil flow.
- On the other hand, if the oil flow is too small, pressure compensation valve spool (3) moves in the direction to increase the oil flow.
- LS valve of the pump is controlled so that the differential pressure between pump discharged pressure (P) and LS pressure (LS) (LS differential pressure: ΔPLS) remains constant, so a suitable amount of oil flows to ensure that the loss of pressure at the control valve (ΔPLS') is equal to ΔPLS.
- The loss of pressure in the control valve is determined by the area of the opening of steering spool (1), so the oil flow matches the opening of steering spool (1).
- The return oil flow from HSS motor (6) passes through chamber (E) and chamber (F), and is drained.

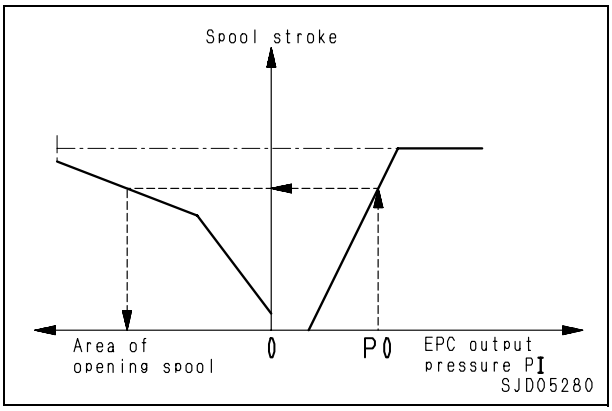

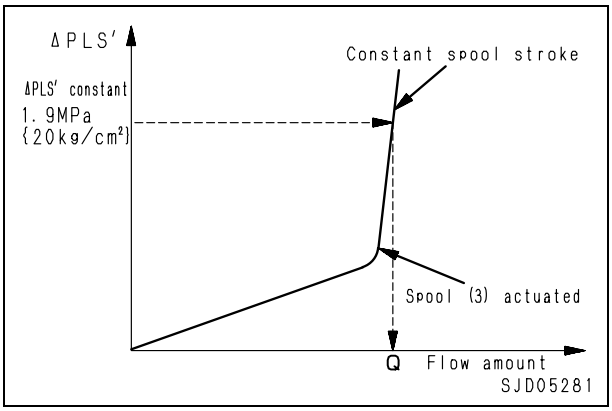

2. Work equipment valve
(Blade lift, blade tilt, ripper lift, ripper tilt)

★ The diagram shows the blade lift valve and steering valve.

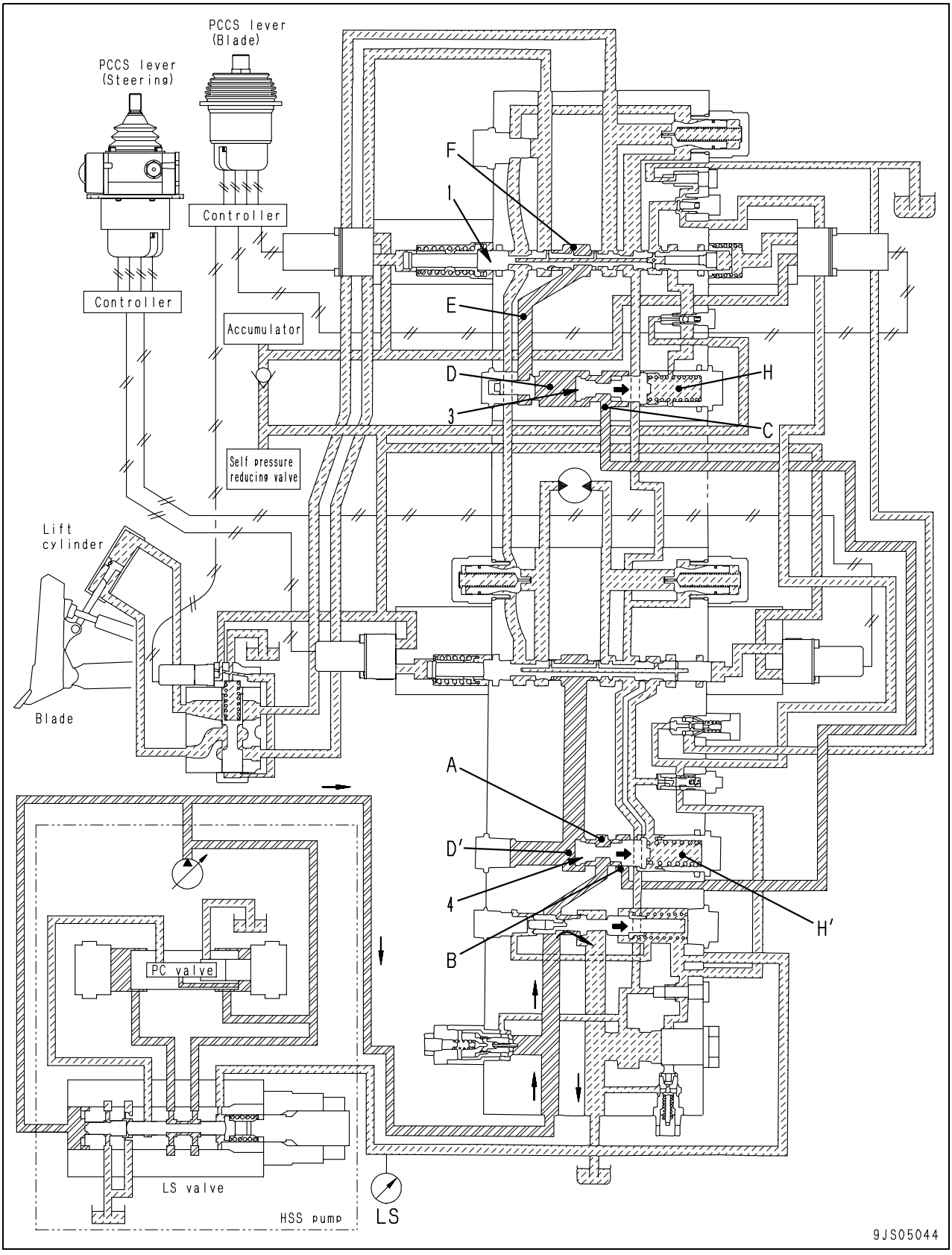

Operation

- When blade lift spool (1) is at the “hold“ position, the pump discharge pressure (unload pressure) is sent to chambers (D) and (D').
- The pressure is not formed in chambers (H) and (H'), so pressure compensation valve spool (3) and steering priority valve spool (4) are pushed completely to the right.
- The pump pressure passes through chambers (A) and (B) of steering priority valve spool (4), and is sent to chamber (C) of the blade lift valve. From here it goes through chamber (D) and chamber (E) to chamber (F).
- In the same way as described in topic “(1) Steering valve“, the position of pressure compensation valve spool (3) is determined to match the opening of blade lift spool (1), and the oil flow is determined so that the pressure loss of the control valve becomes equal to the control differential pressure (ΔLS) of pump LS valve.

3. Meter-out control when blade moves down under its own weight

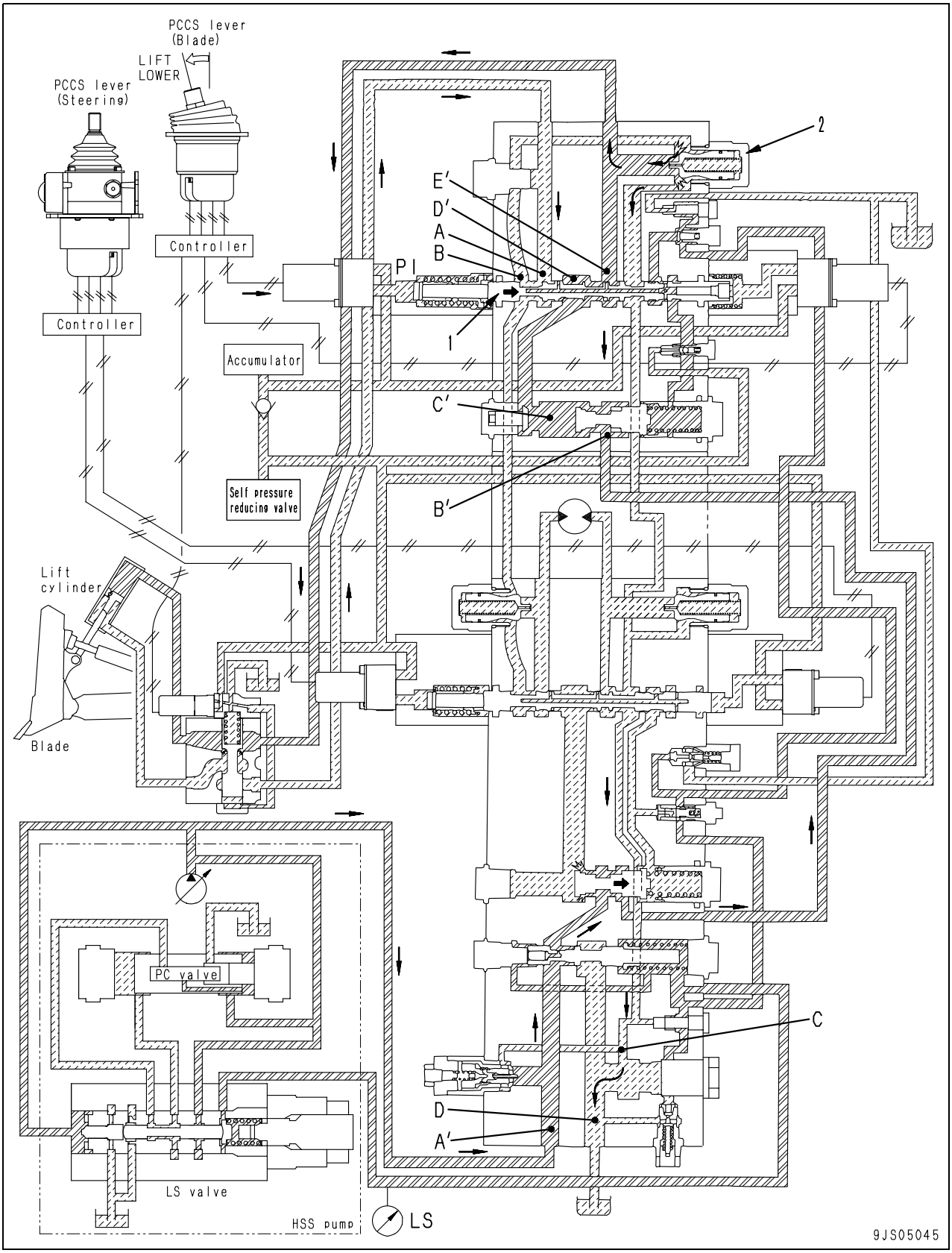

Function

- If the blade moves down under its own weight, the oil flow of return oil from blade lift cylinder is controlled by the area of the opening of blade lift spool (1).

Operation

- When the port of blade lift spool (1) is opened by pilot pressure (PI), because of the weight of the blade, the oil from the cylinder head side passes through ports (A), (B), (C) and (D), and is drained to the tank.
- The flow of return oil from the blade lift cylinder is throttled by the area of opening between ports (A) and (B), so the downward speed is controlled.
- The pressurized oil flowing from the blade lift cylinder head end passes from the drain circuit through suction valve (2) and is supplied to the bottom end of the blade lift cylinder.
- The oil discharged from the pump passes through ports (A'), (B'), (C'), (D') and (E'), and is supplied to the blade lift cylinder bottom.

4. Meter-out control when blade moves down under its own weight (work equipment lever at “float“)

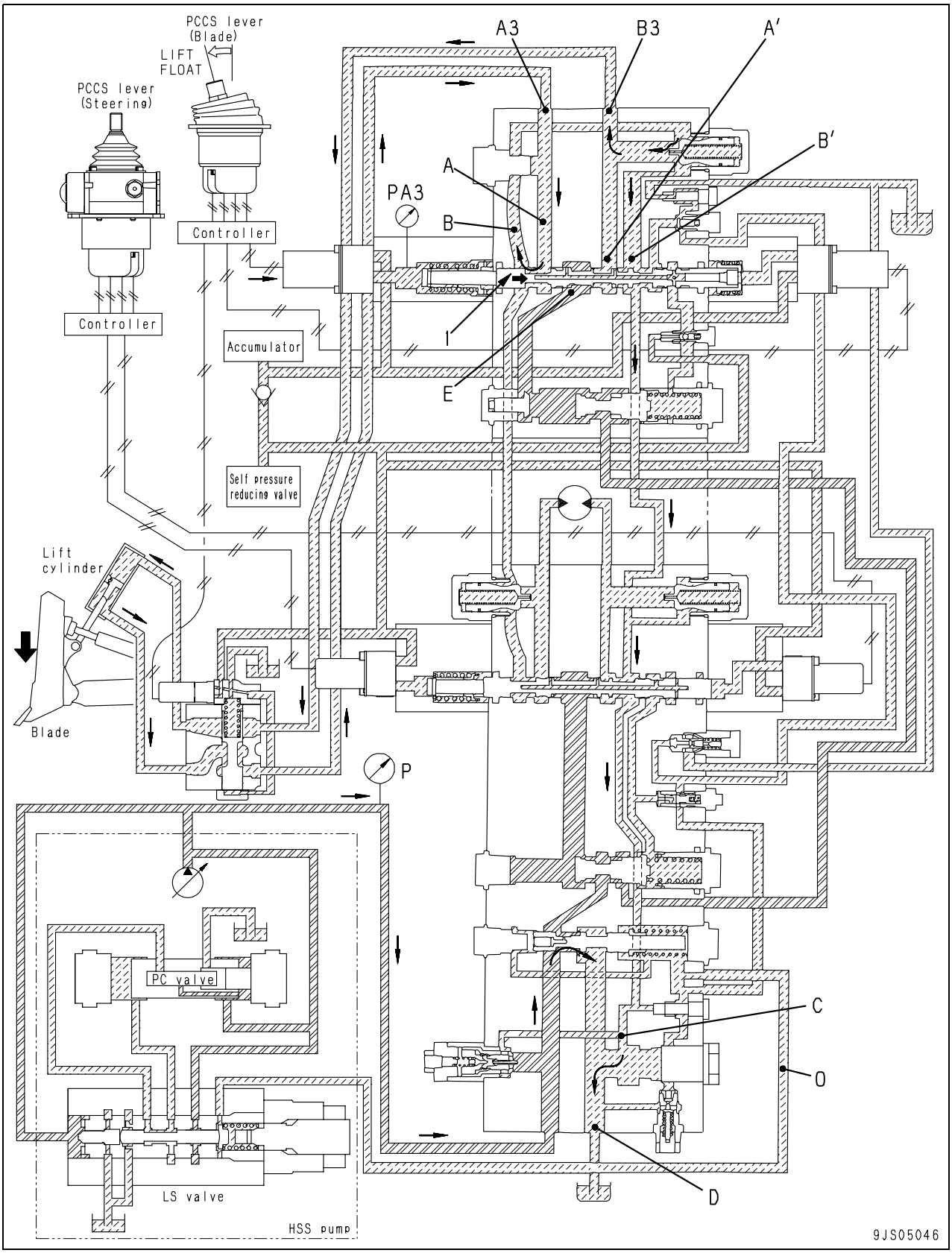

Function

- When the blade lift valve is at “float“, the cylinder port and drain port are connected to put the circuit in a no-load condition.
- When the blade lift valve is in the “float“ condition, the pump passage and cylinder ports (A3) and (B3) are separated so that the other control valves can be operated.

Operation

- When the work equipment control lever is at the “lower“ position and the “float“ button is pressed, output pressure (PA3) of the EPC valve becomes 3.4 MPa {35 kg/cm$_2$ or more and blade lift spool (1) is moved to the maximum stroke position.
- Ports (A3) and (B3) and LS passage (O) are all connected to the drain circuit, so there is no load on the blade lift cylinder.
- If the blade lift cylinder is driven by the weight of the blade, the oil entering from port (A3) flows to ports (A), (B), (B') and (A'), while the rest of the pressurized oil flows through ports (C) and (D), and is drained.
- The oil flow is throttled by the area of opening between ports (A) and (B) of blade lift spool (1), and the cylinder speed is controlled.
- The pump circuit chamber (E) and ports (A3) and (B3) are separated, and pump discharge pressure (P) is formed at chamber (E), so it is possible to carry out compound operations with other control valves.

At relief

1. Steering valve

★ The diagram shows the condition at relief for steering LS relief valve (5).

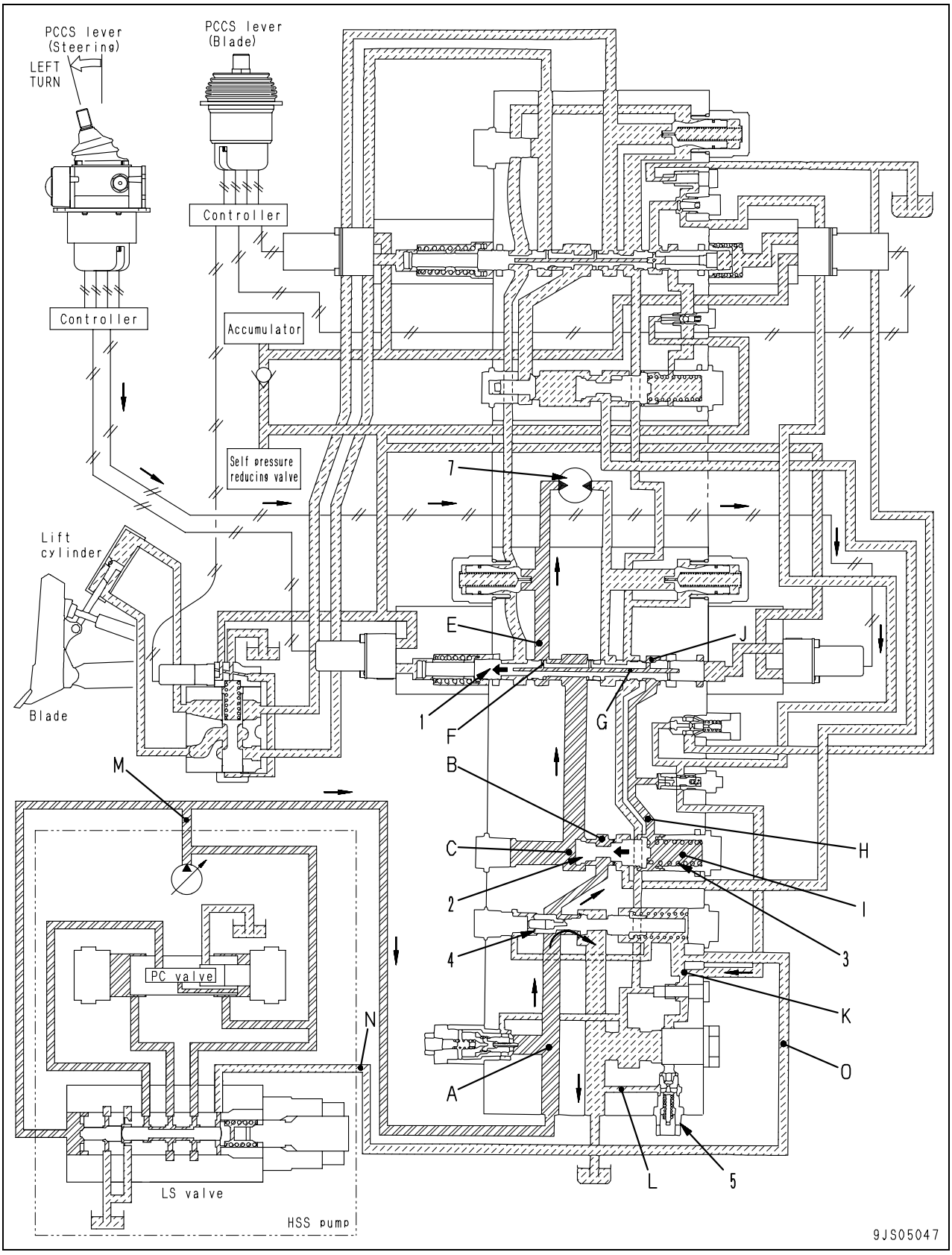

- ΔP1 = ΔP3 + ΔP4 = Differential pressure between ports (M) and (E)
- ΔP2 = Differential pressure between ports (E) and (N)
- ΔP3 = Differential pressure between ports (M) and (B)
- ΔP4 = Differential pressure between ports (B) and (E)
- ΔLS = ΔP1 + ΔP2 = Differential pressure between ports (M) and (N) = 2.0 MPa {20 kg/cm^2}

Function

- It sets the maximum pressure when HSS motor (7) is operated.

Operation

- If steering spool (1) is moved and the pressure of HSS motor (7) becomes higher, the poppet of steering LS relief valve (5) will start to open and oil will be drained from LS circuit (O). (Ports (E), (F), (G), (J), (K) and (L))
- As a result, there will be a drop in pressure in LS passage (O) starting from LS sensing hole (F), and ΔP2 will become larger.
- For the same reason, if the pressure in chambers (H) and (I) drops, steering priority valve spool (2) will push against spring (3) and move to the right, and will make the opening between chambers (B) and (C) smaller, so the flow to chambers (B) and (C) will be throttled and ΔP4 will become larger.
- Because of the pump swash plate control, the system circuit is balanced at a circuit pressure which makes the pressure loss generated by the flow at steering LS relief valve (5), ΔP1 + ΔP2, equal to LS differential pressure (ΔLS).
- When this happens, the pump LS valve detects the differential pressure generated by steering LS relief valve (5), and moves the pump swash plate from the maximum to the minimum position. The pump swash plate is balanced at a position where the LS differential pressure is 2.0 MPa {20 kg/cm^2}.
- When the pump is at the minimum swash plate angle (minimum oil flow), if the minimum oil flow is greater than the LS relief oil flow + leakage at any part, the pressure is confined in the pump circuit (between the pump and chambers (A) and (B)), so the LS differential pressure rises.
- If this differential pressure goes above the set pressure for unload valve (4), the unload valve is actuated to relieve the excess oil flow and balance the circuit.

2. Blade lift, blade tilt, ripper lift and ripper tilt

★ The diagram shows the relief condition of work equipment LS relief valve (5) with the blade tilt at the end of its stroke.

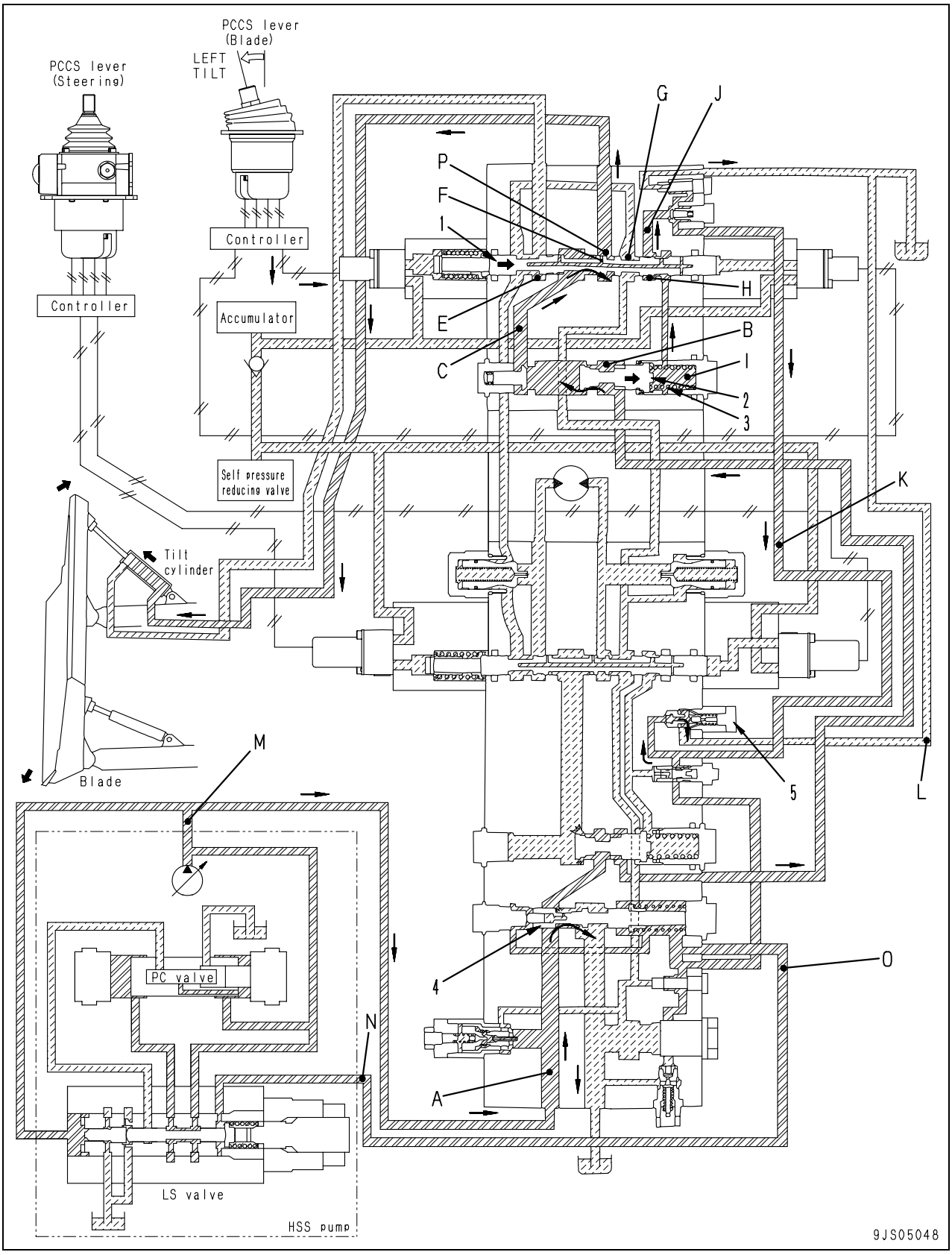

- ΔP1 = ΔP3 + ΔP4 = Differential pressure between ports (M) and (P)
- ΔP2 = Differential pressure between ports (P) and (N)
- ΔP3 = Differential pressure between ports (M) and (B)
- ΔP4 = Differential pressure between ports (B) and (P)
- ΔLS = ΔP1 + ΔP2 = Differential pressure between ports (M) and (N) = 2.0 MPa {20 kg/cm^2}

Operation

- If blade tilt spool (1) is moved and the pressure of the blade tilt cylinder becomes higher, the poppet of work equipment LS relief valve (5) will start to open and oil will be drained from LS circuit (O). (Ports (E), (F), (G), (J), (K) and (L))
- As a result, there will be a drop in pressure in LS passage (O) starting from LS sensing hole (F), and ΔP2 will become larger.
- For the same reason, if the pressure in chambers (H) and (I) drops, pressure compensation valve spool (2) will push against spring (3) and move to the right, and will make the opening between chambers (B) and (C) smaller, so the flow to chambers (B) and (C) will be throttled and ΔP4 will become larger.
- Because of the pump swash plate control, the system circuit is balanced at a circuit pressure which makes the pressure loss generated by the flow at work equipment LS relief valve (5), ΔP1 + ΔP2, equal to LS differential pressure (ΔLS).
- When this happens, the pump LS valve detects the differential pressure generated by work equipment LS relief valve (5), and moves the pump swash plate from the maximum to the minimum position. The pump swash plate is balanced at a position where the LS differential pressure is 2.0 MPa {20 kg/cm^2}.
- When the pump is at the minimum swash plate angle (minimum oil flow), if the minimum oil flow is greater than the LS relief oil flow + leakage at any part, the pressure is confined in the pump circuit (between the pump and chambers (A) and (B)), so the LS differential pressure rises.
- If this differential pressure goes above the set pressure for unload valve (4), the unload valve is actuated to relieve the excess oil flow and balance the circuit.

3. Compound operation of steering and blade tilt

★ The diagram shows the relief condition of LS relief valves (4) and (5) at steering stall with the blade tilt at the end of its stroke.

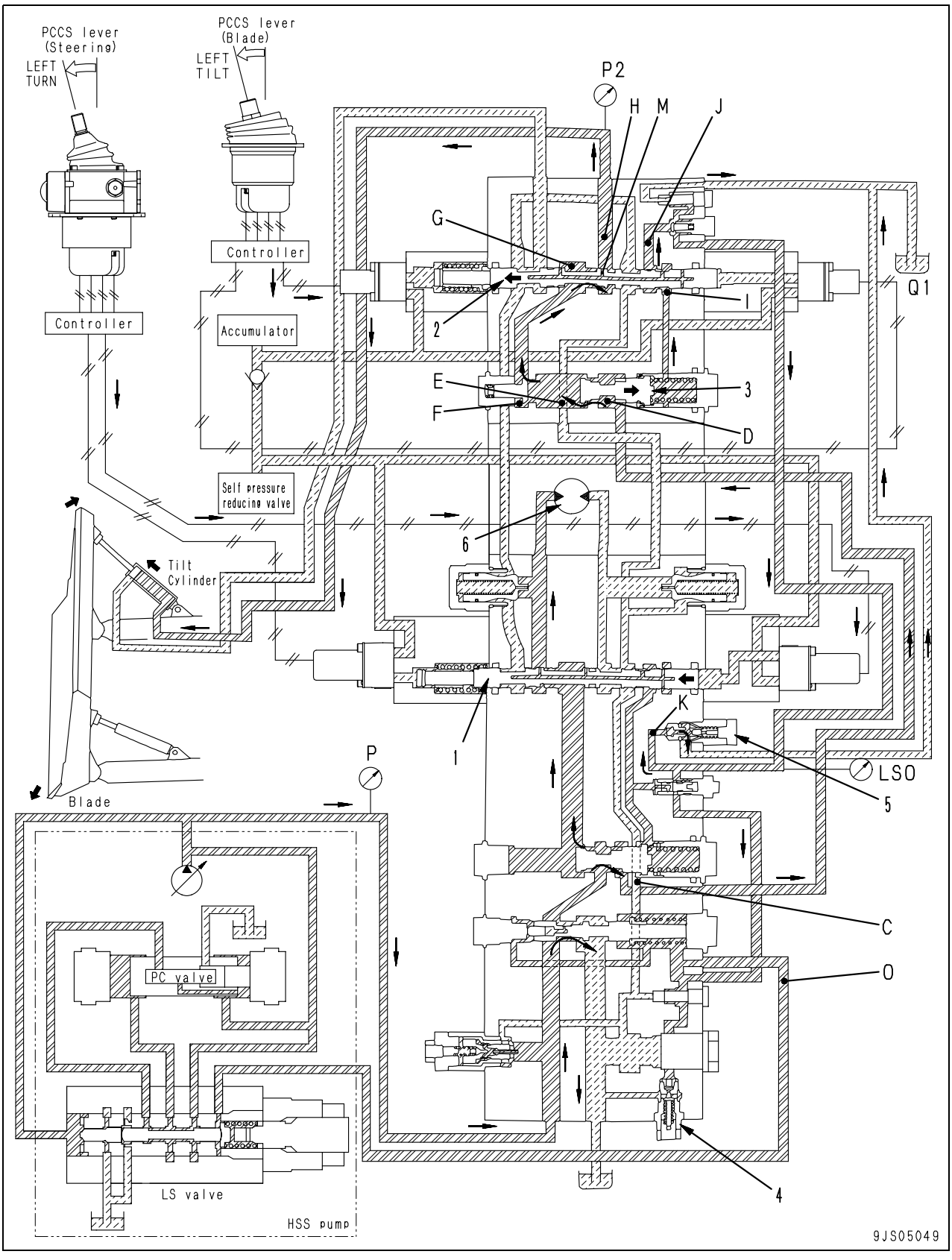

• Δ = P - P2
• ΔPO = Differential pressure between ports (H) and (K)
• ressure P2 = LSO + ΔPO

Function

- When steering spool (1) and blade tilt spool (2) are relieved at the same time, the pump pressure is separated by pressure compensation valve spool (3) in the blade tilt valve, and the port pressure is maintained at a constant value.

Operation

- If HSS motor (6) reaches the stall condition, the load pressure increases and LS relief valve (4) for the steering valve is actuated, so the system is cut off.
- For details, see “1. Steering valve“.
- When this happens, the pump discharge pressure (P) is maintained at 38.2 MPa {390 kg/cm^2} and this is sent to chamber (G) of the blade tilt valve.
- When blade tilt spool (2) is operated and the load on the blade tilt valve is greater, blade tilt valve LS relief valve (5) is actuated, and drain oil flow (Q1) flows to LS circuit (O).
- As a result, a differential pressure is generated on the left and right sides of pressure compensation valve spool (3) by LS throttle (M) of blade tilt spool (2), and it moves the full stroke to the right.
- When this happens, the opening between chambers (D) and (E) is throttled to the minimum size (pump pressure separated).
- Oil flow (Q1) is determined by pump discharge pressure (P) and the total pressure loss Δ(P – LSO) of ports (C), (D), (E), (F), (G), (I), (J) and (K).
- Furthermore, pressure (P2) (the pressure in chamber (H)) becomes the total (LSO + ΔPO) of the circuit pressure loss of ports (H), (I), (J) and (K), and the set pressure of work equipment LS relief valve (5).

Compound operations

1. Steering and work equipment valve

★ The diagram shows the condition when the steering and blade lift valve are operated at the same time.

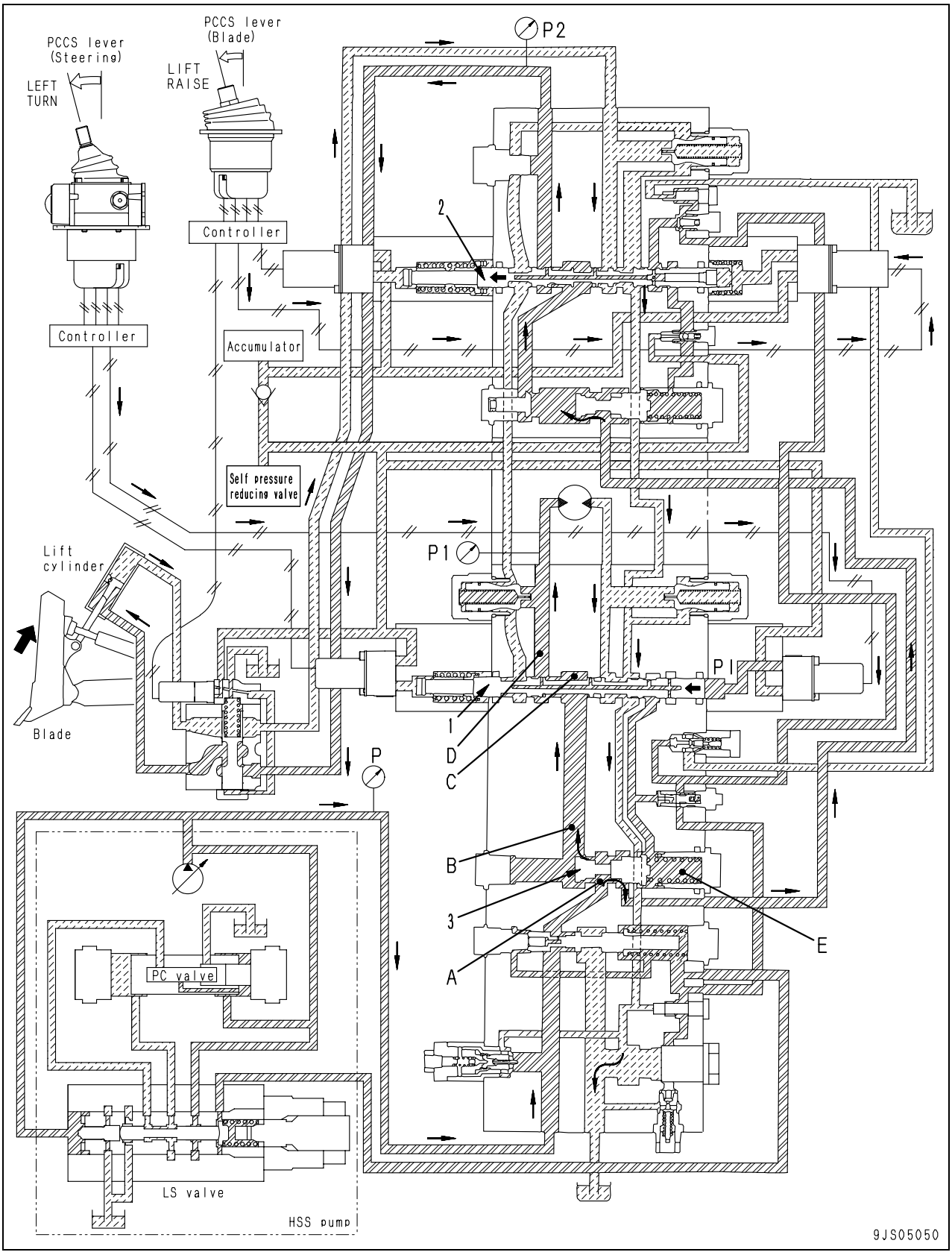

Function

- The steering valve is equipped with steering priority valve spool (3), so if the steering valve and the downstream work equipment valve are operated at the same time, priority is given to the flow of oil to the steering valve, and the rest of the oil discharged from the pump goes to the work equipment valve.

Operation

- When steering spool (1) is operated by EPC valve output pressure (PI) and the oil flows, a differential pressure is created between chambers (C) and (D).
- Steering priority valve spool (3) is controlled by this differential pressure, and at the same time, the pump swash plate angle is controlled at ΔPLS = 2.0 MPa {20 kg/cm^2}, and the flow of oil to the steering valve is fixed.
- For details, see “1. Steering valve“ of “Control of oil flow.“
- In this condition, if downstream work equipment blade lift spool (2) is operated, the pump discharge pressure momentarily drops.
- At this point, the differential pressure between chambers (C) and (D) becomes smaller, and steering priority valve spool (3) is moved to the left by the pressure in chamber (E) in the direction to throttle the opening to the work equipment valve.
- At the same time, ΔPLS becomes smaller, so the pump swash plate angle moves in the maximum direction to supply an oil flow to make up the amount that the pressures drops.

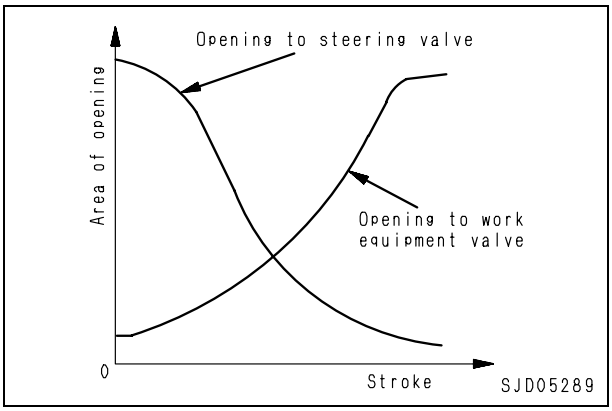

When pump swash plate does not reach maximum angle

- When the maximum oil flow from the pump is greater than the sum of the flow demanded by the steering valve and work equipment valve, an amount of oil that matches the opening of steering spool (1) flows to the steering valve.
- An amount of oil decided by the pump discharge pressure, the load pressure and the area of the spool opening, flows to the work equipment valve.

When pump swash plate is at maximum angle

- When the maximum flow of oil from the pump is smaller than the sum of the oil flow demanded by the steering valve and work equipment valve.

1) When steering valve load ≦ work equipment valve load.
- An amount of oil that matches the opening of steering spool (1) flows to the steering valve, and the remaining oil flows to work equipment valve.

2) When steering valve load > work equipment valve load.
- Pump discharge pressure (P) is determined by the steering valve load, but in this condition, if the downstream work equipment valve where the load is smaller is operated, the difference in pressure will cause the oil to try to flow to the work equipment valve, so the pump discharge pressure will drop.
- Steering priority valve spool (3) increases the size of the opening to the steering system, while at the same time reducing the size of the opening to the work equipment in order to ensure the flow of oil to the steering system.
- In this condition, the flow of oil is divided in proportion to the difference in pressure between differential pressure (P) – (P1) and differential pressure (P) – (P2).

The bigger (P1) – (P2) is, the smaller the flow of oil to the steering system becomes.

2. Compound operation of blade lift and blade tilt

★ The diagram shows the condition when the blade lift and blade tilt are operated at the same time.

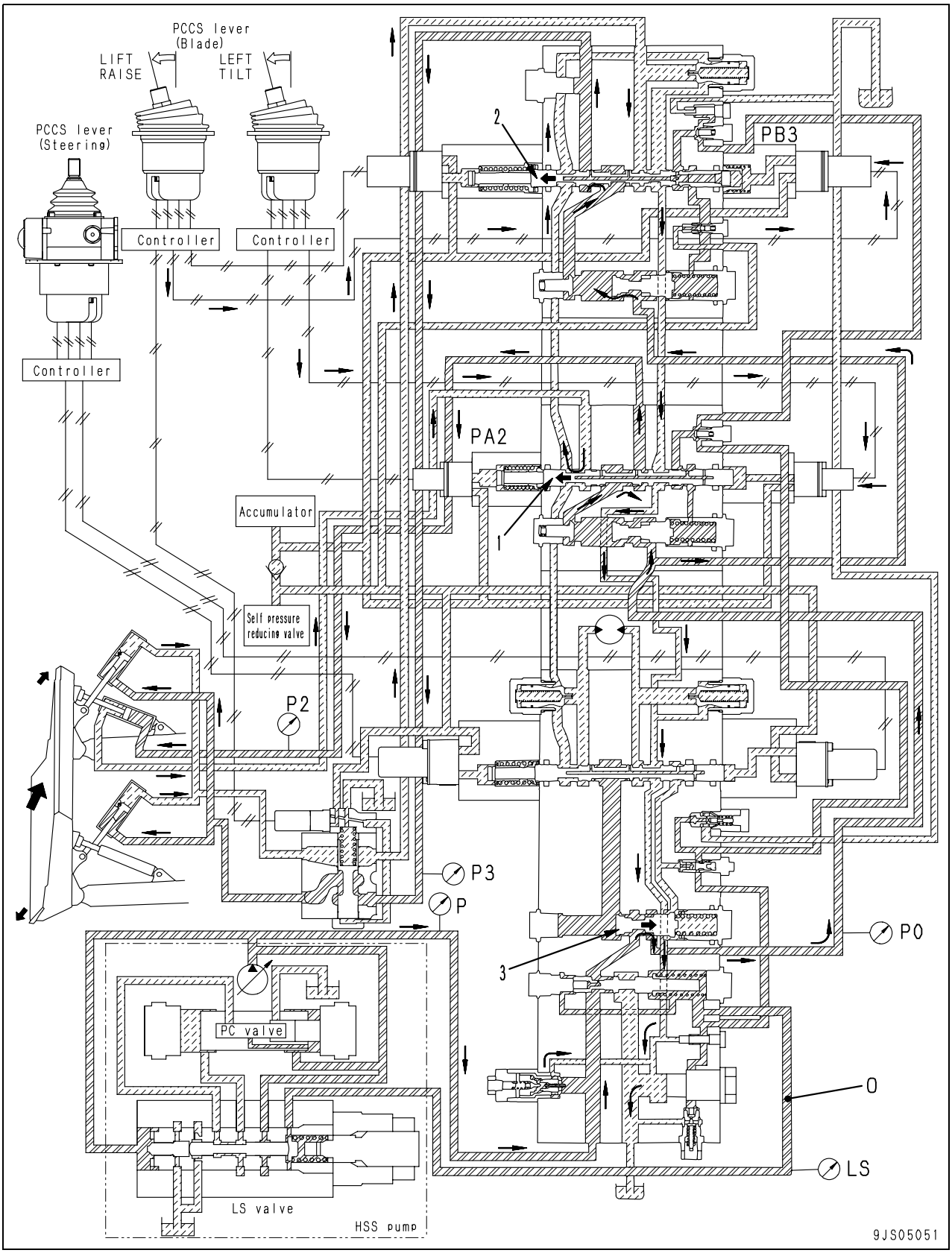

Function

- It consists of a parallel circuit, so when compound operations are carried out, the oil flow is divided according to the size of each spool opening.

Operation

- When blade tilt spool (1) and blade lift spool (2) are at the “hold“ position or are “operated“, steering priority valve (3) is pushed completely to the right, and the size of the opening to the downstream area is at its maximum.
- Blade tilt spool (1) and blade lift spool (2) are actuated by PPC valve output pressure (PA2) and (PB3), and each is balanced at a position that matches its own EPC valve output pressure.

When pressure (P2) ≦ (P3)

- Blade lift valve load pressure (P3) is sent to the pump LS valve through LS passage (O).

1) When pump swash plate does not reach maximum angle

- When the maximum flow of oil from the pump is greater than the total of the oil flow demanded by the blade tilt valve and blade lift valve, an oil flow that matches the opening of the spool flows to both the blade tilt valve and blade lift valve.

2) When pump swash plate is at maximum angle

- When the maximum flow of oil from the pump is smaller than the total of the oil flow demanded by the blade tilt valve and blade lift valve, the flow of oil to the blade tilt valve and blade lift valve is divided according to differential pressure (PO) – (P2) and differential pressure (PO) – (P3).
- In other words, more oil flows to (P2) where the load is small.

★ In cases where the blade is raised above ground and the blade tilt valve and blade lift valve for “raise“ are operated at the same time, the blade tilt valve load pressure is smaller than the blade lift valve load pressure, so the flow of oil to the blade tilt valve is given priority. In addition, the oil flow demanded by the blade tilt valve is smaller, so the condition is just as if priority was given to the oil flow for the blade tilt valve.

When pressure (P2) = (P3)

(P) – (P2) ≒ (P) – (P3), so an oil flow proportional to the size of the spool opening is distributed to each spool.

Unload valve preset system

★ The diagram shows the condition with preset check valve (3) open immediately after blade lift valve is operated.

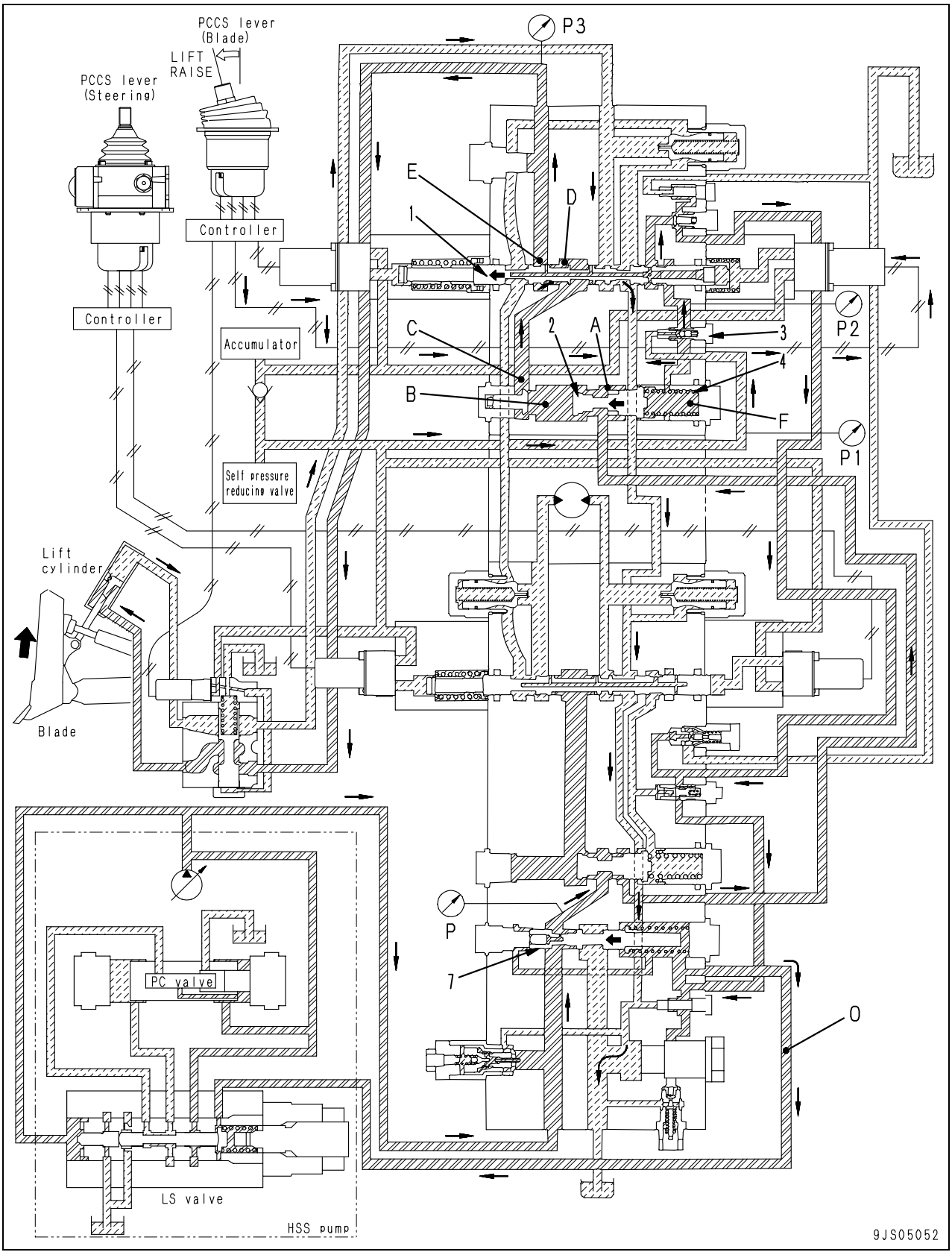

Function

- This improves the response of the system including the pump swash plate and pressure compensation valve by sending the pilot pressure (basic pressure of EPC valve) to the LS circuit, and compensating the rise of the LS circuit pressure.

Operation

- When blade lift valve spool (1) is at the “hold“ position, pilot pressure (P1) (basic pressure of EPC valve) is sent through preset check valve (3) to chamber (F) of the pressure compensation valve. This pressure is called preset pressure (P2).
- Unload pressure (P) is being sent to chamber (B), but (P1) + (F0) > (P) (F0: load of spring (4)), so pressure compensation spool (2) moves to the left and the size of the opening between chambers (A) and (B) becomes the maximum.
- When blade lift spool (1) is switched, unload pressure (P) flows immediately through chambers (A), (B), (C), (D) and (E) to the blade lift cylinder, so the pressure at the port starts to rise and the time lag becomes smaller.
- At the same time, preset pressure (P2) is supplied to LS circuit (O), and the pressure in the LS circuit rises.
- Unload valve (7) closes, and oil is sent further to the pump LS valve to improve the response of the pump swash plate angle. This makes it possible to reduce the response time for giving the necessary oil flow.

Work equipment cylinder

Blade lift cylinder

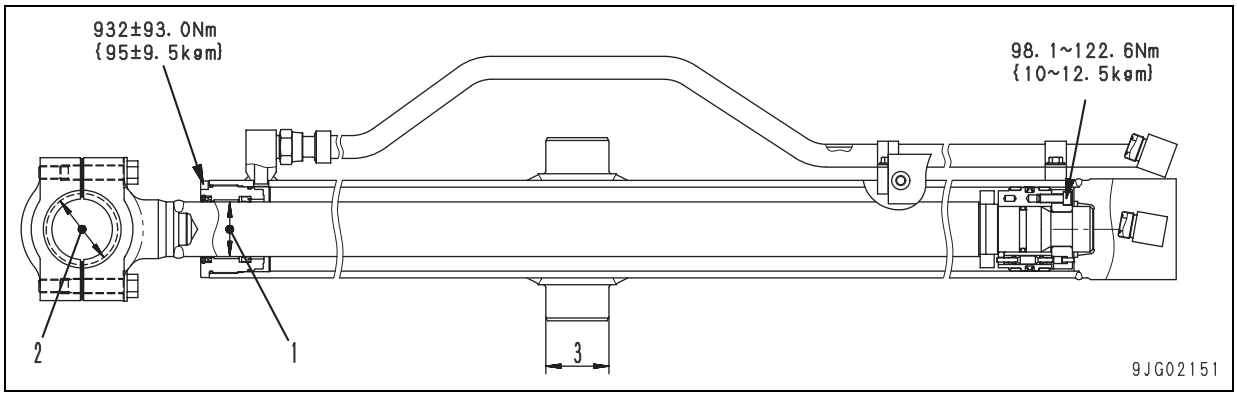

Blade tilt cylinder

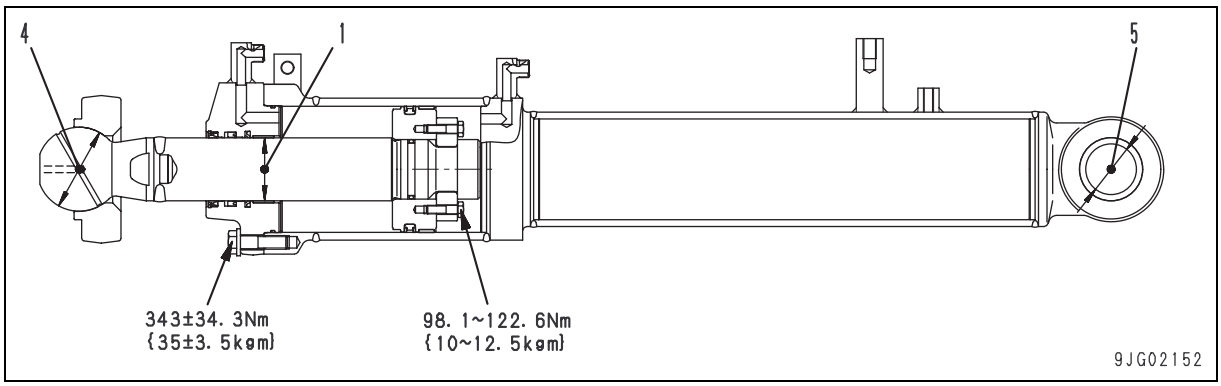

Ripper cylinder

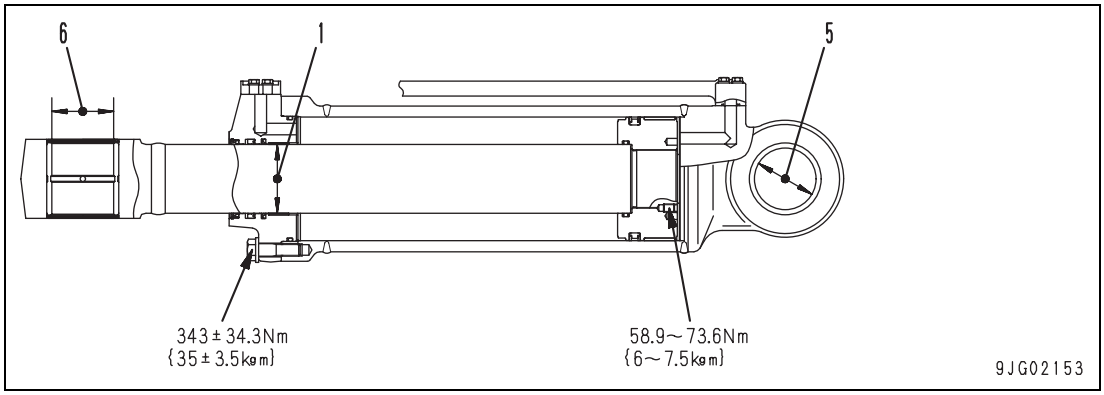

★ The piping of the lift cylinder and tilt cylinder of the variable multi-shank ripper is different from the above.

Unit: mm

No.	Check item		Criteria					Remedy
			Standard size	Tolerance		Standard clearance	Clearance limit	
				Shaft	Hole			
1	Clearance between piston rod and bushing	Blade LIFT	75	-0.030 -0.076	+0.279 +0.065	0.095 – 0.355	0.666	Replace
		Blade TILT	90	-0.036 -0.090	+0.270 +0.061	0.097 – 0.330	0.695	
		Ripper LIFT	100	-0.036 -0.090	+0.257 +0.047	0.105 – 0.375	0.675	
		Ripper TILT	110	-0.036 -0.090	+0.261 +0.047	0.105 – 0.375	0.675	
2	Clearance between piston rod support shaft and blade ball portion	Blade LIFT	85	—	+0.3 0	—	1.0	
3	Clearance between cylinder support shaft and bushing	Blade LIFT	85	-0.100 -0.174	—	0.100 – 0.228	0.5	
4	Clearance between piston rod spherical surface and cap	Blade TILT	115	-0.200 -0.300	—	—	—	
5	Clearance between cylinder bottom support shaft and bushing	Blade TILT	60	-0.030 -0.050	+0.174 +0.100	0.130 – 0.224	1.0	
		Ripper LIFT	90	-0.036 -0.090	+0.207 +0.120	0.156 – 0.297	1.0	
		Ripper TILT	100	-0.036 -0.090	+0.201 +0.119	0.156 – 0.291	1.0	
6	Clearance between cylinder rod support shaft and bushing	Ripper LIFT	90	-0.036 -0.090	+0.207 +0.120	0.156 – 0.297	1.0	
		Ripper TILT	100	-0.036 -0.090	+0.201 +0.119	0.156 – 0.291	1.0	

Piston valve

For blade lift cylinder

Outline

- The piston valve is installed on the piston in the blade lift cylinder. When the piston reaches its stroke end, the valve releases the oil from the hydraulic pump to reduce the oil pressure being exerted on the piston.
  When the blade is tilted, the blade is subject to a tortional force owing to the uneven position of the pistons in the two cylinders; that is the piston on one side is still moving while the piston on the other side has reached its stroke end.
  The piston valves are installed to prevent the tortional force from occurring. When one of the pistons reaches its stroke end, its piston valve opens to relieve the oil pressure.
  In addition the piston valve relieves the shock which occurs when the piston comes into contact with the cylinder head or the bottom and serves to reduce the subsequent surge pressure in the cylinder by letting the oil escape from the cylinder before the piston reaches its stroke end.

Operation

1. Piston valve CLOSED

Pressurized oil from the hydraulic pump acts on piston (2) and piston valve (3).
The piston valve (3) is pushed in the direction of the arrow until piston valve seat (4) comes into snug contact with the tapered section, thereby, this causing the pressure in the cylinder to rise and moving piston (2) in the direction of the arrow.

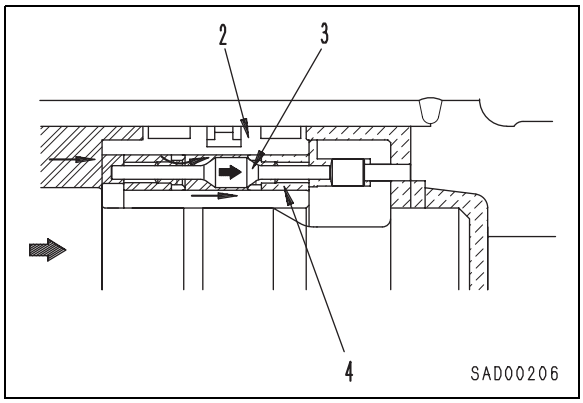

2. Piston valve OPEN

Just before piston rod (1) reaches the end of its stroke, the tip of valve (6) contacts the cylinder bottom, so valve (6) and piston valve (3) stop at that position and do not move further. Only piston (2) moves further.
When this happens, the oil at the cylinder head, which was sealed by piston valve (3), escapes from piston valve seats (4) and (5), and the pressure inside the cylinder stops rising.

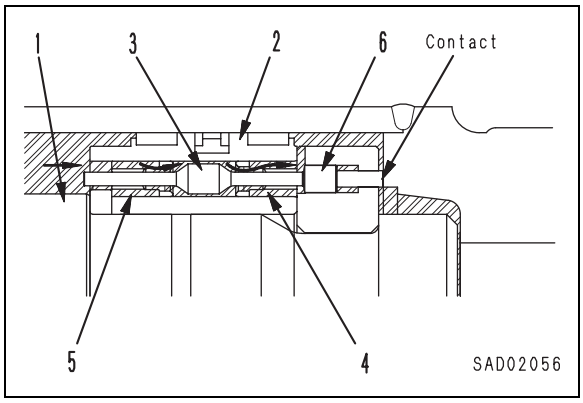

Quick drop valve
(For blade lift cylinder)

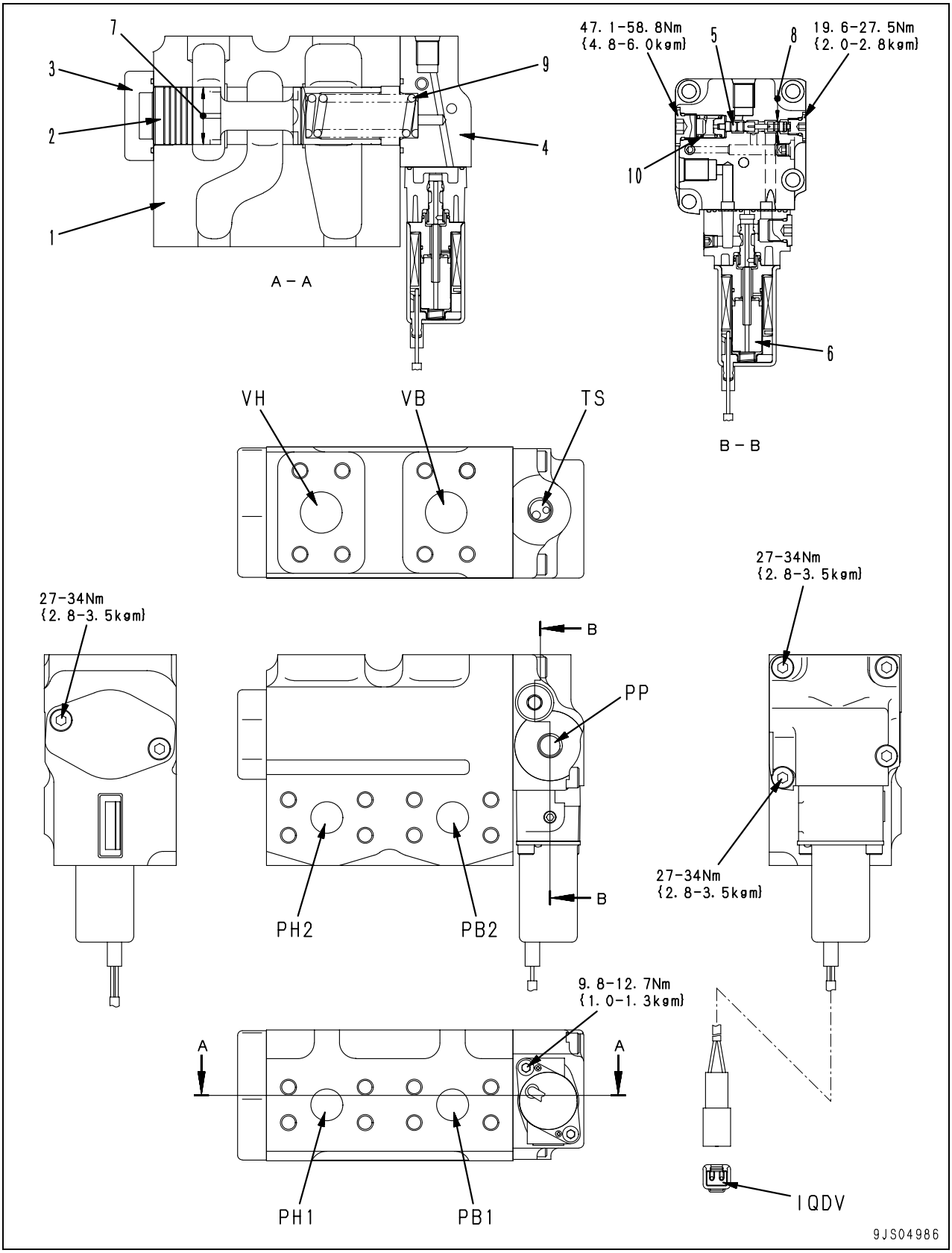

IQDV: Electric current to switch QDV
PB1: To left blade lift cylinder bottom
PB2: To right blade lift cylinder bottom
PH1: To left blade lift cylinder head
PH2: To right blade lift cylinder head
PP: EPC valve basic pressure port (from self pressure reducing valve)
TS: Seal drain port
VB: From control valve blade “raise“
VH: From control valve blade “lower“

1. Body
2. Main spool
3. Plate
4. Body
5. Selector valve spool
6. EPC valve

Unit: mm

No.	Check item	Criteria					Remedy
7	Clearance between main spool and valve body	Standard size	Tolerance		Standard clearance	Clearance limit	Replace
			Shaft	Hole			
		ϕ36	-0.002 -0.007	+0.010 0	0.008 – 0.010	0.015	
8	Clearance between selector valve spool and valve body	ϕ6	-0.010 -0.022	+0.018 0	0.010 – 0.015	0.02	

Unit: mm

No.	Check item	Criteria					Remedy
9	Main spool return spring	Standard size			Repair limit		Replace spring if damaged or deformed.
		Free length x outer diameter	Installation length	Installation load	Free length	Installation load	
		76.4 x 27	69.5	449 N {45.8 kg}	—	359 N {36.6 kg}	
10	Selector valve spool return spring	20.9 x 13.8	12.5	97 N {9.89 kg}	—	77.6 N {7.91 kg}	

1. No circulating condition

- Fine control of lowering blade (Stroke of lever is less than 70%.)
- QDV mode: OFF

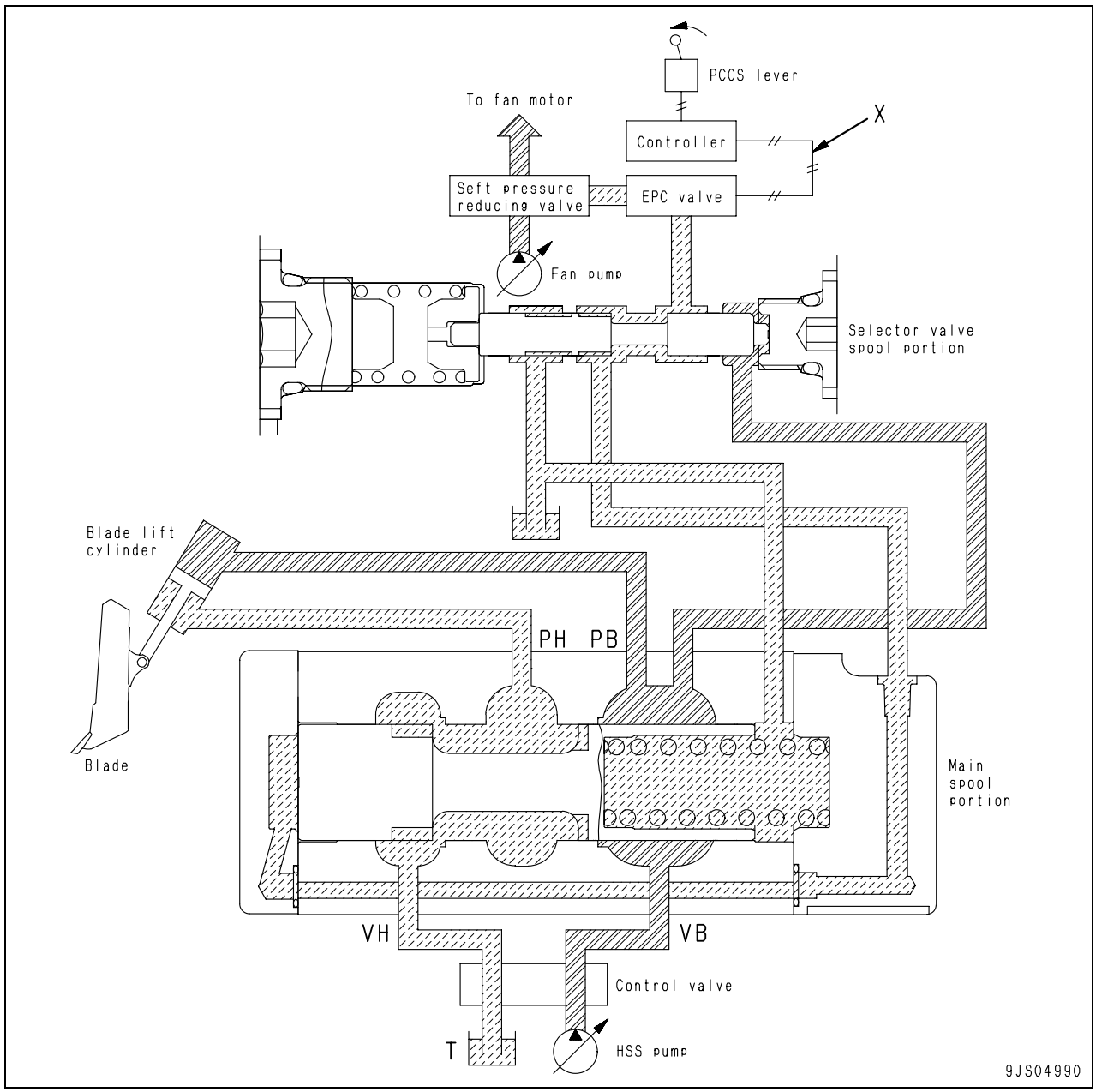

Outline

- QDV: Abbreviation of Quick Drop Valve
- The quick drop valve is installed between the control valve and the blade lift cylinder.
- When the blade control lever is set in “lower“ position, the quick drop valve prevents a vacuum on the cylinder bottom side and shortens time lag in starting digging.
- The blade lowering speed is mostly decided by the pump delivery. However, it can be heightened by installing the quick drop valve.
- Since the quick drop valve electronically controls the operation of the PCCS lever, the controller and EPC valve (QDV is built-in), it is possible to select ON-OFF.

Operation

- Because command current (X) from the controller to the EPC valve is 0A, main spool (2) is not switched.
- The circuits between port (VH) and port (PH) / port (VB) and port (PB), are shut off.
- The pressure oil of the lift cylinder head flows from port (VH) to tank (T) through the control valve.

2. Circulating condition

- Lowering blade (Stroke of lever is more than 70%.)
- QDV mode: ON

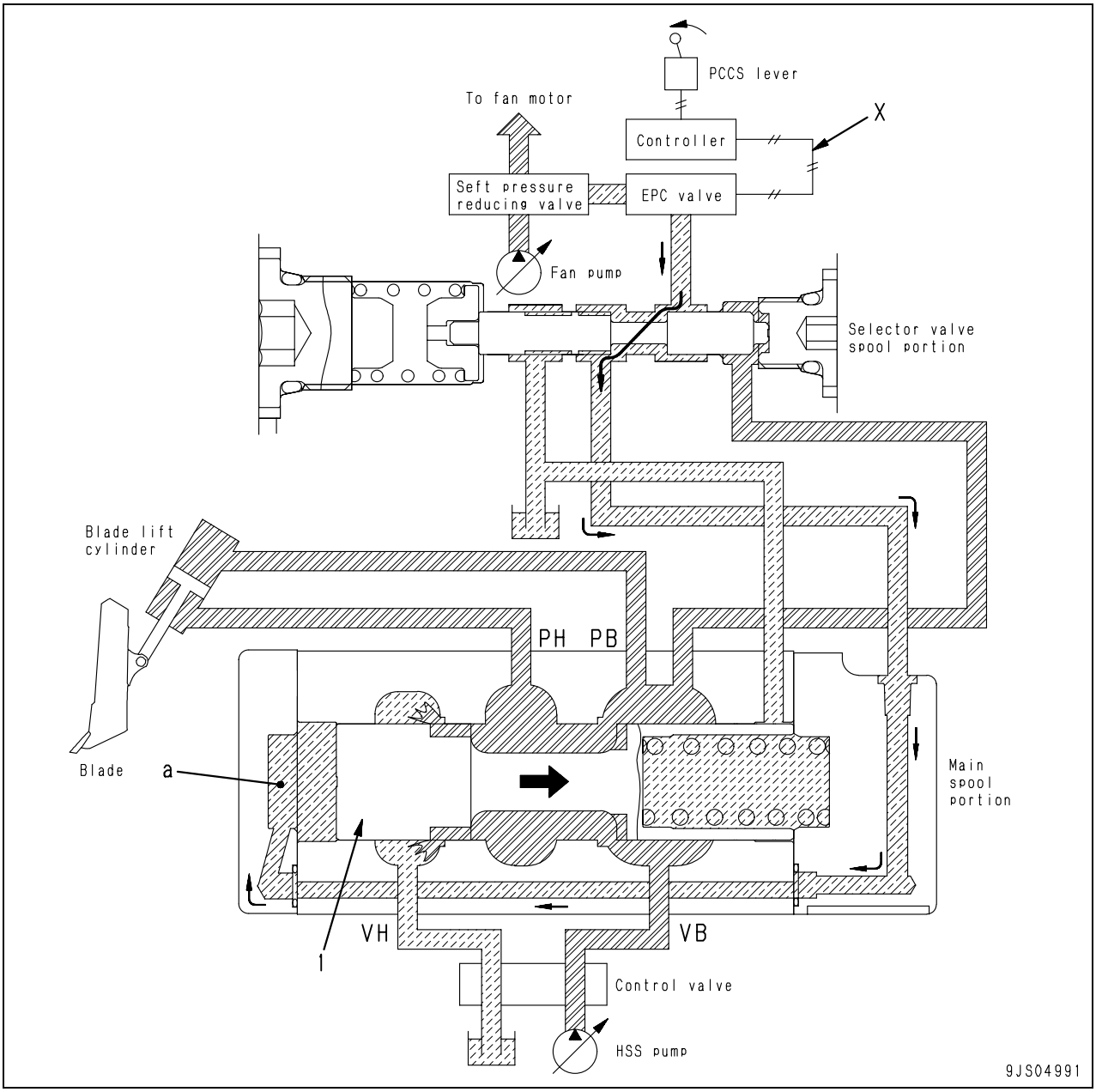

Operation

- 1,000 mA of command current (X) flows from controller to EPC valve and the pilot pressure from the EPC valve is taken to chamber (a) at the main spool.
- Main spool (1) moves to the right and the circuits between port (VH) and port (PH)/port (VB) and port (PB), get into circulating condition.
- Most of the pressurized oil which has been flowing from port (PH) to port (VH), circulates and flows to port (PB).
- The pressurized oil which has been flowing to port (PB) merges with the pressure oil from port (VB) and flows into the lift cylinder bottom.
- The blade lowering speed is increased by the quantity of oil flowing into the lift cylinder bottom.
- Vacuum on the lift cylinder bottom is prevented.

3. From the circulating condition of lowering blade to the blade tensed condition

- Lowering blade (Stroke of lever is more than 70%.)
- QDV mode: ON

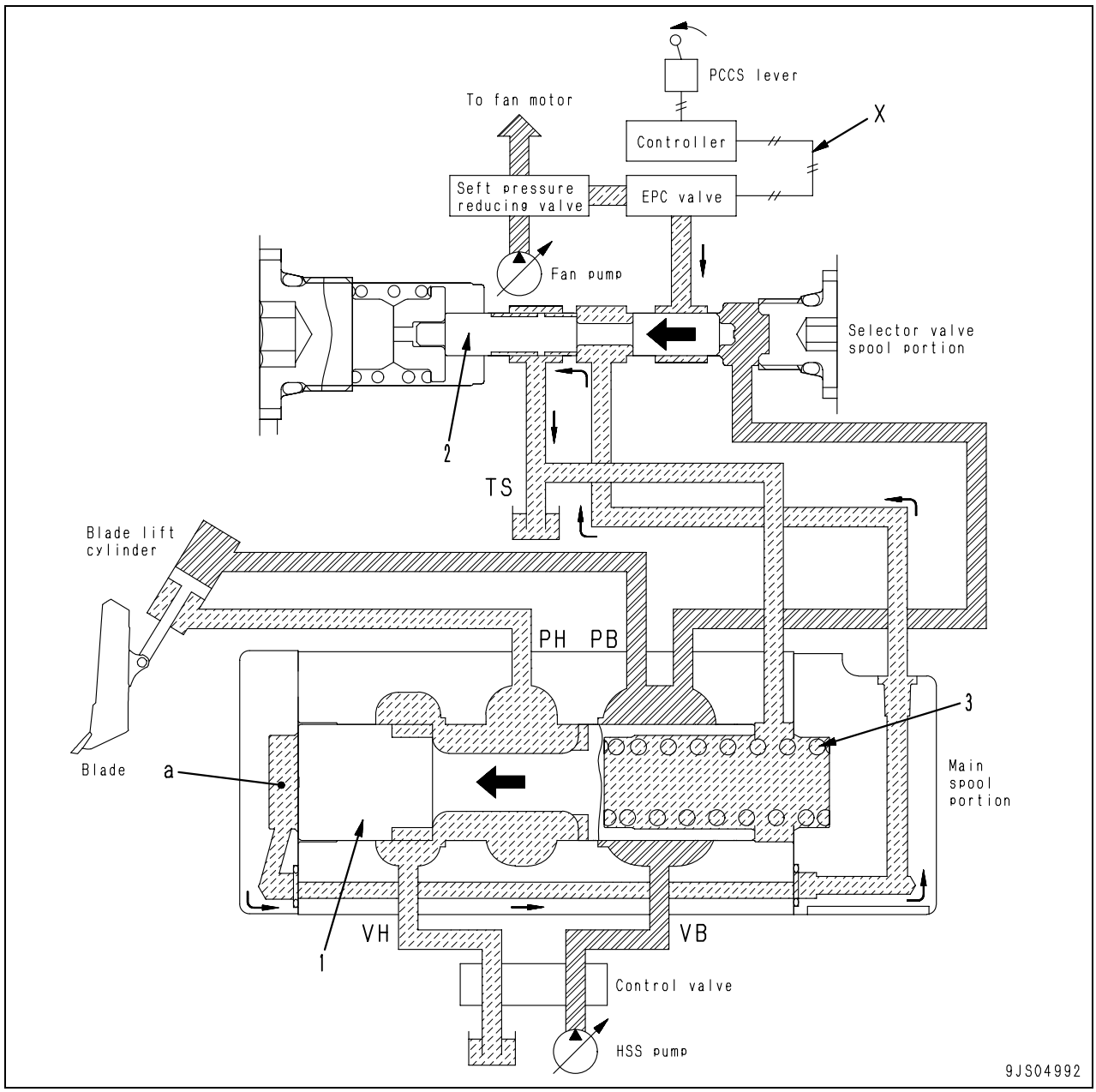

Operation

- Under the circulating condition of blade lowering, if the blade gets tensed, the lift cylinder bottom pressure rises.
- If the lift cylinder bottom pressure becomes 3.43 MPa {35kg/cm^2} or more, selector valve spool (2) moves to the left.
- The pilot pressure from the EPC valve is blocked and pressure chamber (a) of main spool (1) is connected to drain circuit (TS).
- Main spool (1) moves to the right by the force of spring (3).
- The lift cylinder bottom is connected to the circuit between port (PB) and port (VB), this enables the blade to be tensed under no circulating condition.

Self pressure reducing valve

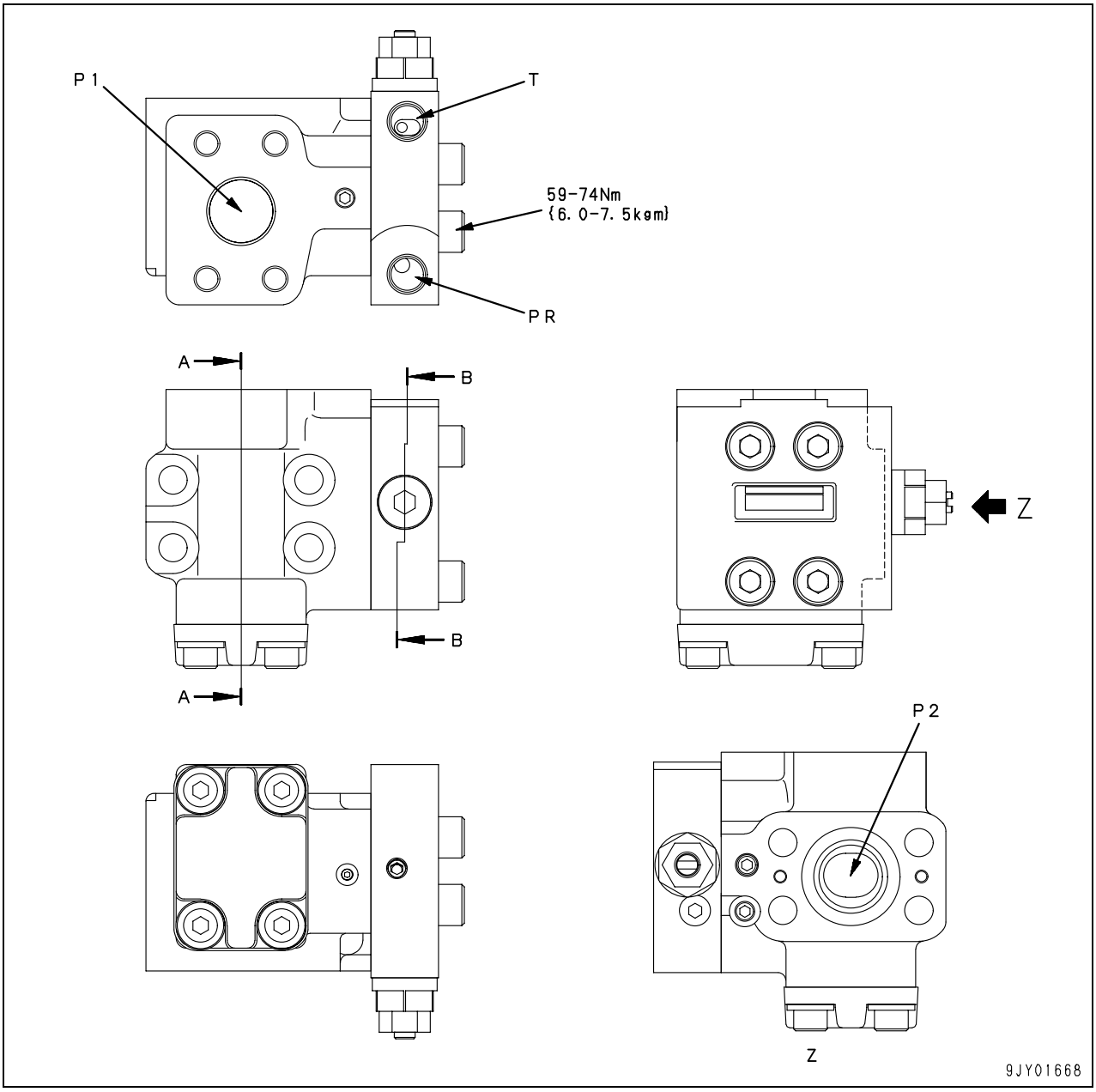

T: To tank
P1: From pump
P2: To fan motor
PR: Supply to PPC valve and EPC valve

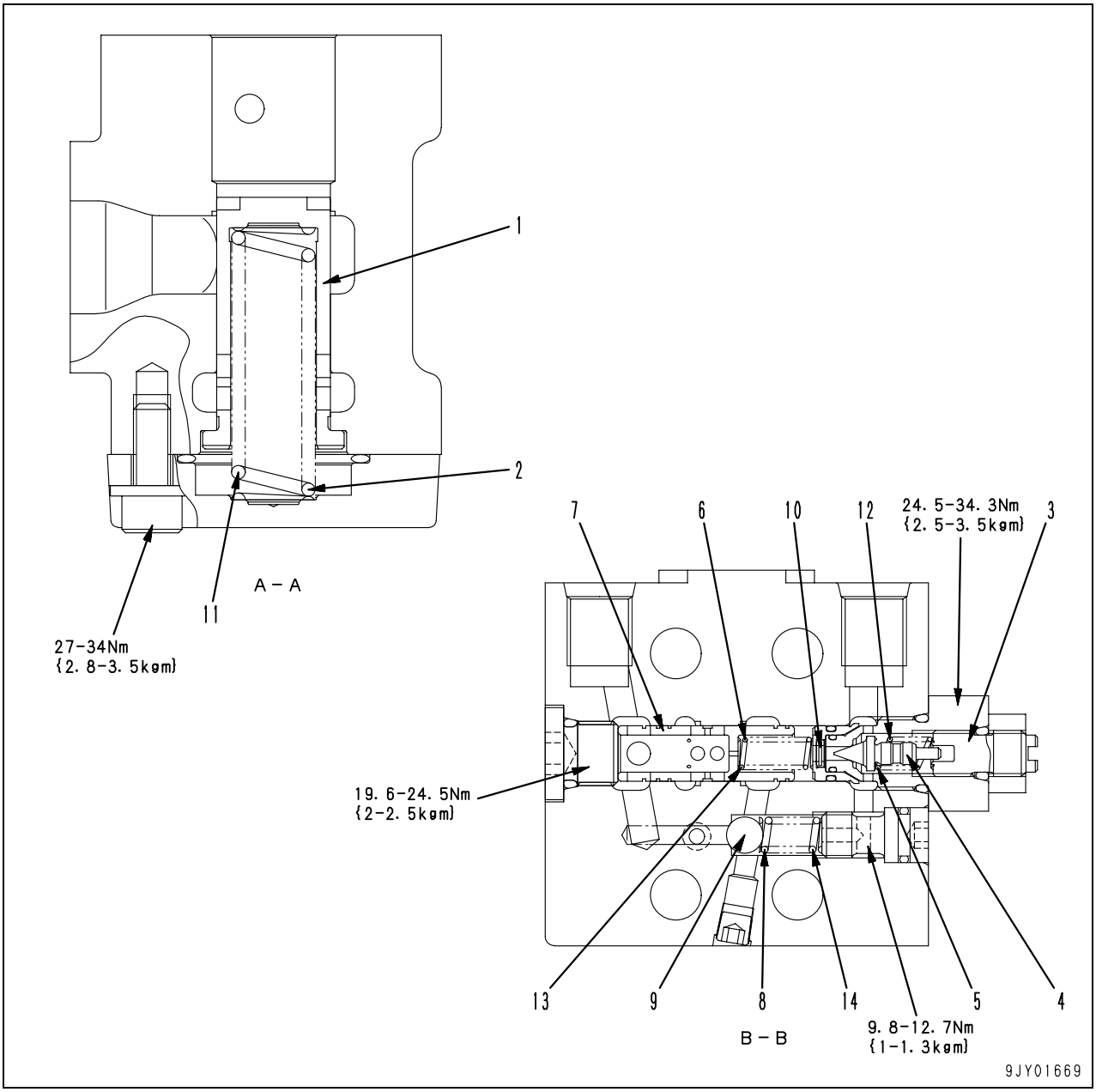

1. Valve (sequence valve)
2. Spring
3. Screw
4. Poppet
5. Spring (pressure reducing valve pilot)
6. Spring (pressure reducing valve main)
7. Valve (pressure reducing valve)
8. Spring (safety valve)
9. Ball
10. Filter

Unit: mm

No.	Check item	Criteria					Remedy
		Standard size			Repair limit		
11	Spring (pressure reducing valve main)	Free length x outer diameter	Installation length	Installation load	Free length	Installation load	Replace spring if damaged or deformed.
		19.2 x 7.20	16.1	19.6 N {2.0 kg}	—	17.7 N {1.80 kg}	
12	Spring (pressure reduction valve pilot)	17.8 x 7.20	12.7	28 N {2.90 kg}	—	25.6 N {2.60 kg}	
13	Spring	71.0 x 18.0	59.0	200 N {20.4 kg}	—	186 N {19.0 kg}	
14	Spring (safety valve)	16.1 x 7.80	13.4	61.7 N {6.30 kg}	—	58.8 N {6.0 kg}	

Function

- The self pressure reducing valves reduce the discharge pressure of the fan pump and supplies it to the PPC valve, the EPC valve, etc. as the control pressure.

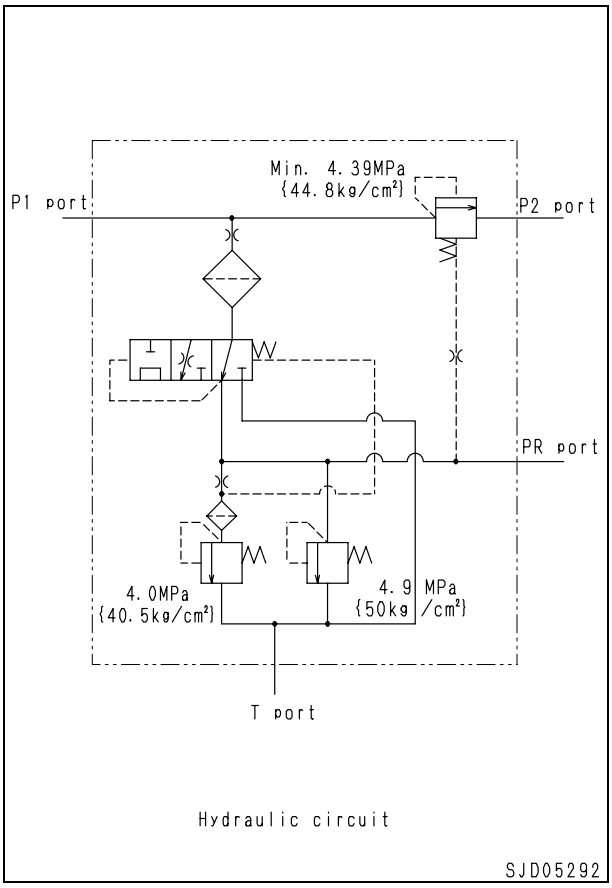

Operation

At engine stop (total low pressure)

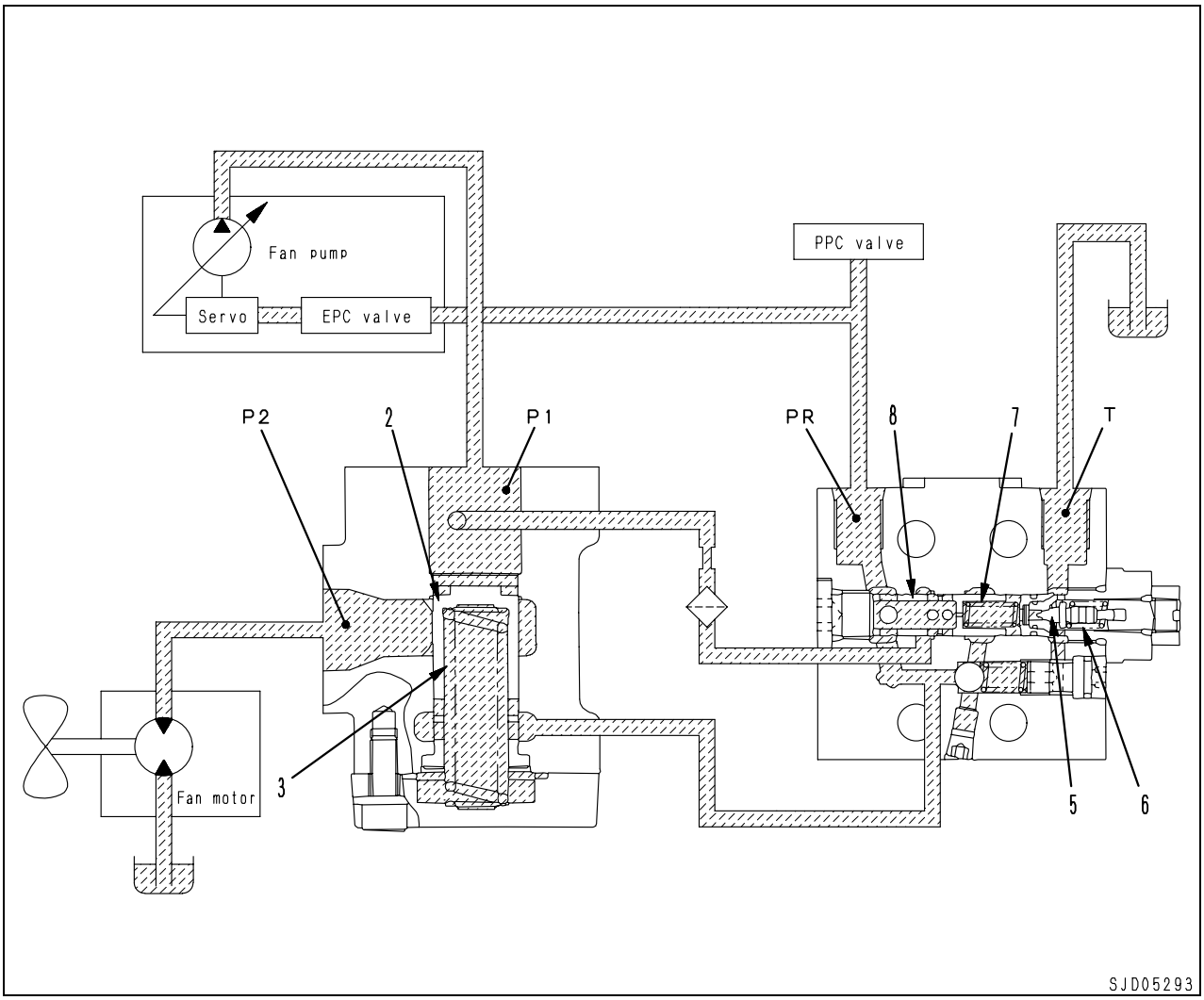

- Spring (6) pushes the poppet (5) to the seat, and the circuit between ports (PR) and (T) is closed.
- Spring (7) pushes valve (8) to the left side, and the circuit between port (P1) and port (PR) is open.
- Spring (3) pushes the valve (2) to the upper side, and the circuit between ports (P1) and (P2) is closed.

When load pressure (P2) is lower than output pressure (PR) of the self pressure reducing valve.

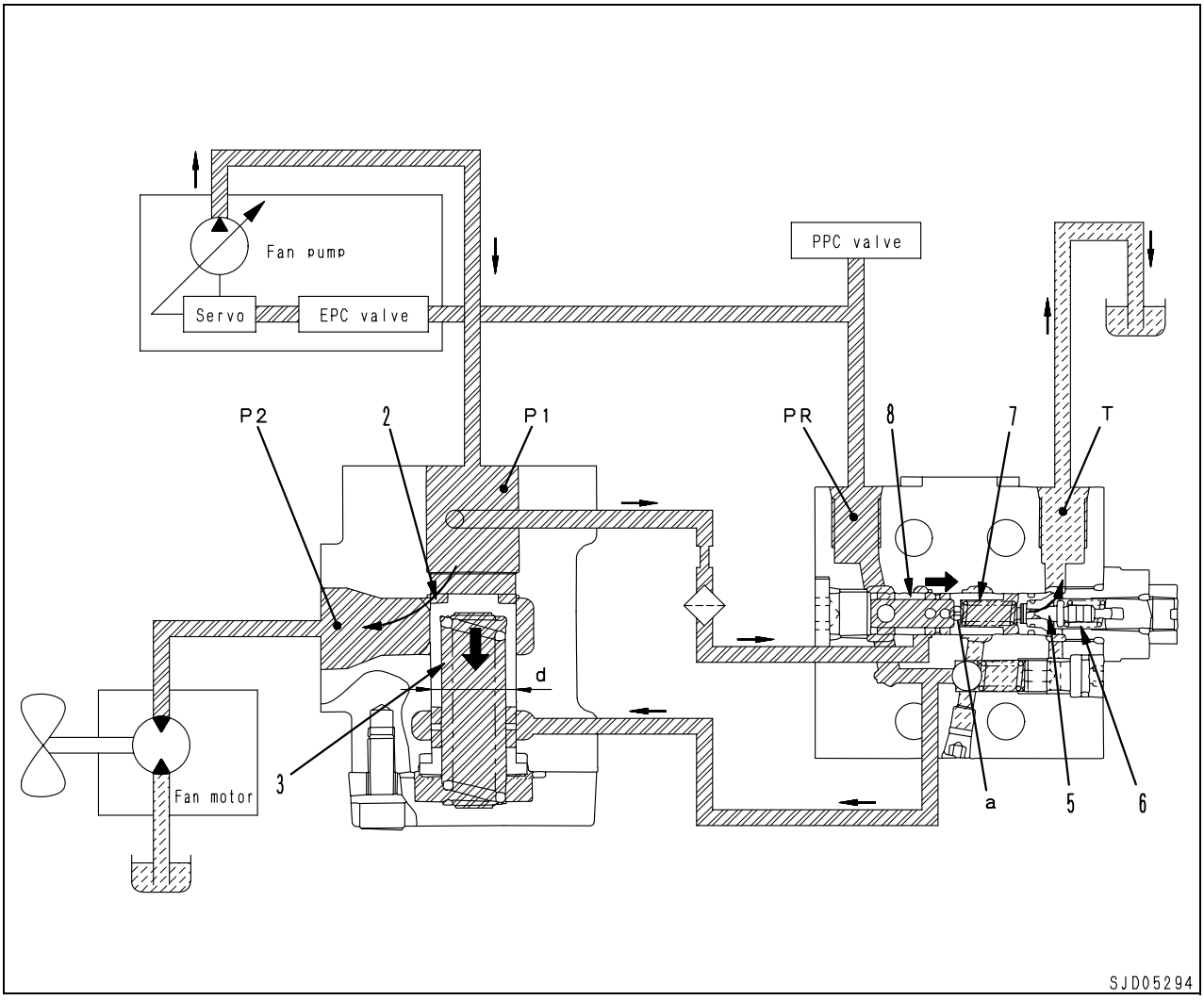

- The spring (3) and the pressure (PR) [0 MPa {0kg/cm2} at the time of engine stop] pushes valve (2) in the direction to close the circuit between ports (P1) and (P2). When the hydraulic oil enters (P1) port, the expression [pressure (P1) ≒ Spring (3) force + (area d x (PR) pressure)] holds, and the self pressure reducing valve will adjust the openings of ports (P1) and (P2) so that pressure (P1) can be maintained higher than pressure (PR).
- When (PR) pressure rises above set pressure, poppet (5) opens and hydraulic oil flows through the route, from (PR) port, through hole (a) in spool (8), through poppet (5) opening to the tank port (T).
- Therefore, differential pressure occurs around hole (a) in spool (8) and spool (8) moves from port (P1) in the direction to close (PR) opening. Then (P1) pressure is reduced and adjusted to a certain pressure [set pressure] with the opening and is supplied as (PR) pressure.

At raise of load pressure (P2)

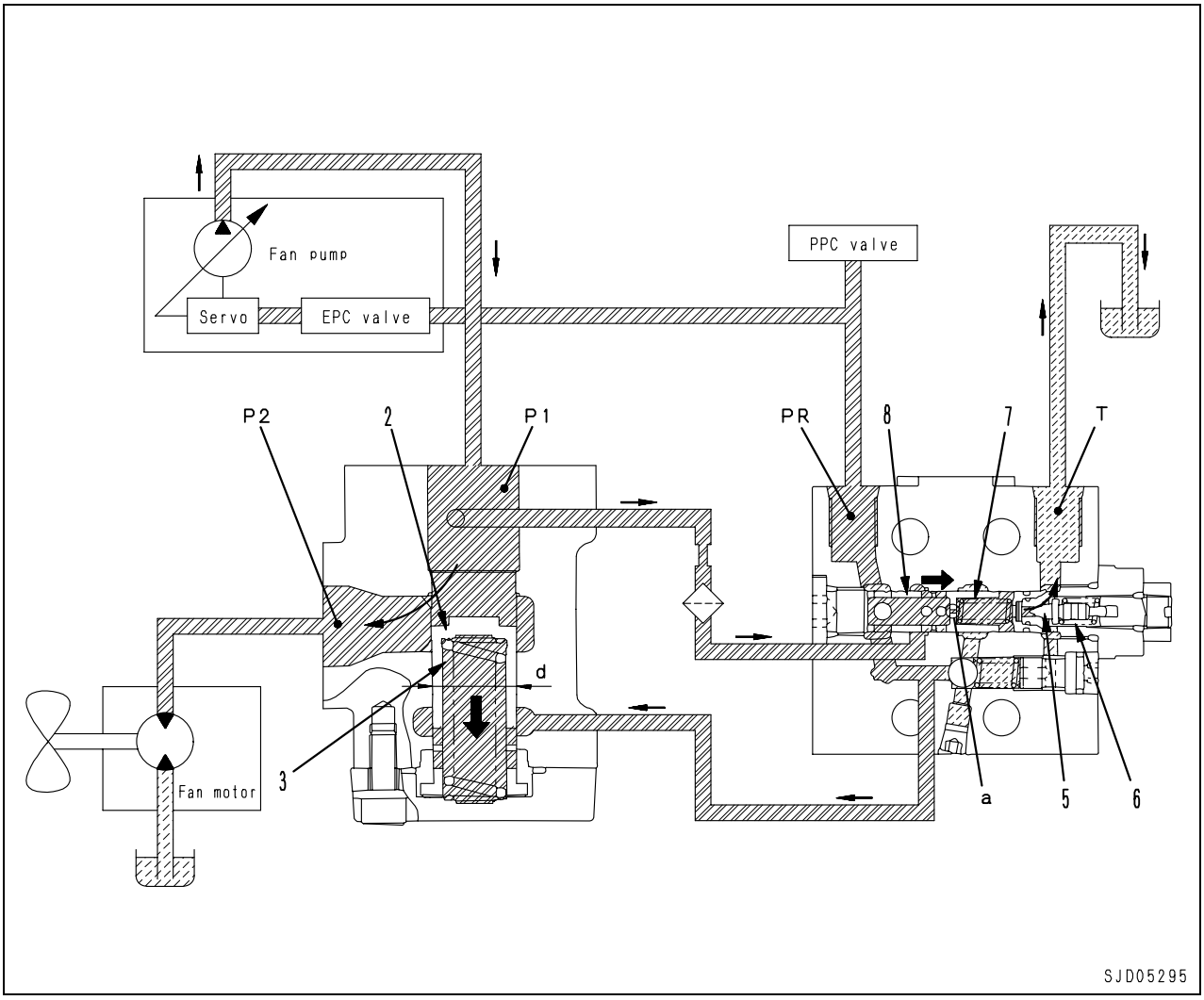

- When load pressure (P2) rises due to digging or other operations, pump delivery increases and (P1) pressure rises. Then the expression {(P1) pressure > Spring (3) force + [area d x (PR) pressure]} will hold, and valve (2) will move to the below side till the stroke end. As a result, the opening between ports (P1) and (P2) increases and passage resistance becomes smaller, reducing engine horsepower loss.
- When (PR) pressure rises above set pressure, poppet (5) opens and hydraulic oil flows through the route, from (PR) port, through hole (a) in spool (8), through poppet (5) opening to the tank port (T).
- Therefore, differential pressure occurs around hole (a) in spool (8) and spool (8) moves from port (P1) in the direction to close (PR) opening. Then (P1) pressure is reduced and adjusted to a certain pressure [set pressure] with the opening and is supplied as (PR) pressure.

In the case of abnormal high pressure

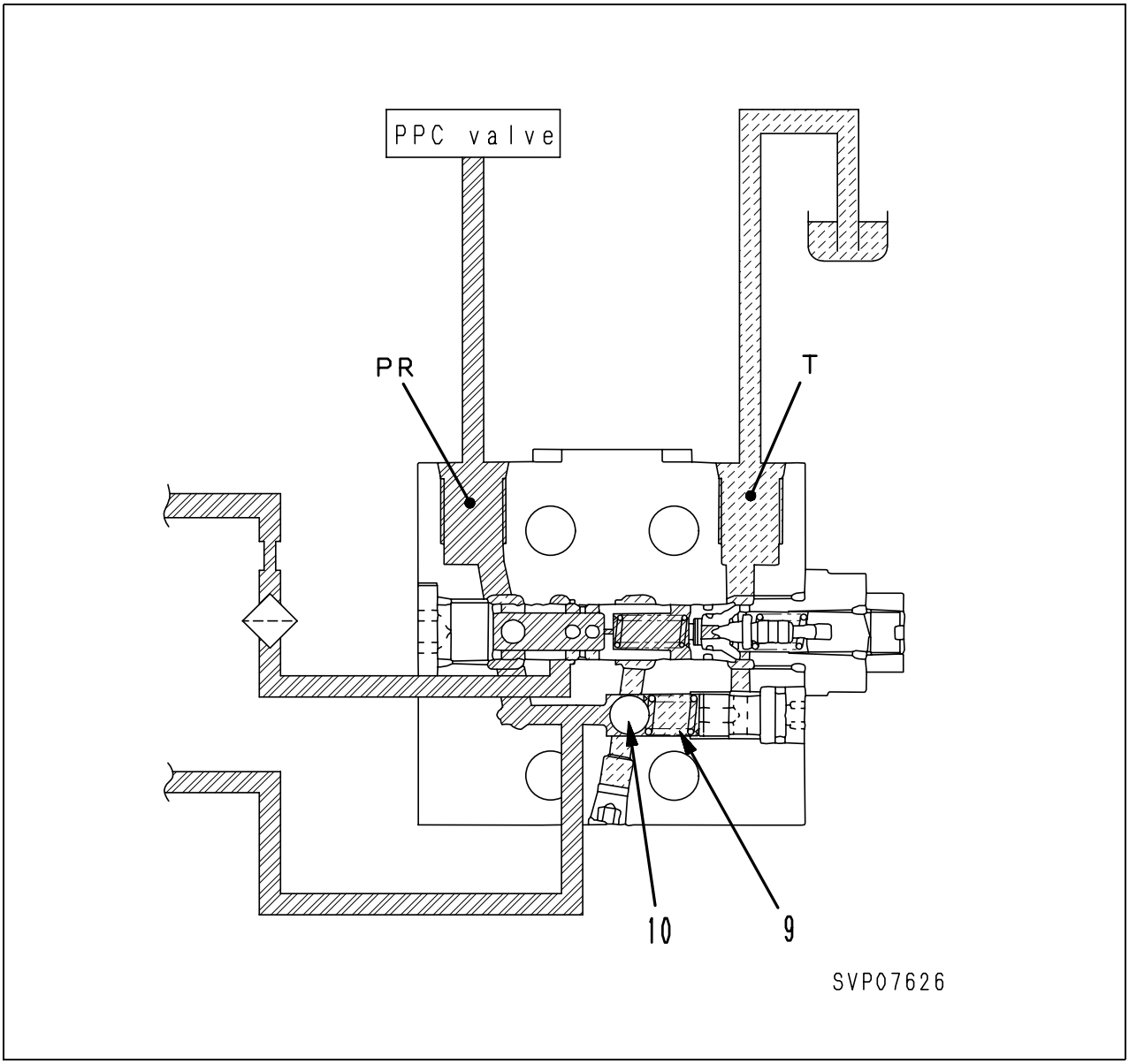

- When (PR) pressure of the self pressure reducing valve rises abnormally high, ball (10) will separate from the seat against spring (9) force to flow the hydraulic oil to output ports (PR) → (T) so as to reduce (PR) pressure. As a result, the equipment [PPC valve, EPC valve, etc.], to which the oil pressure is supplied, is protected from the abnormal high pressure.

D155AX-6 Bulldozer

Form No. SEN00607-00

© 2005 KOMATSU
All Rights Reserved
Printed in Japan 12-05 (02)

BULLDOZER

D155AX-6

Machine model	Serial number
D155AX-6	80001 and up

10 Structure, function and maintenance standard

Work equipment

Work equipment 2
Cylinder stay 2
Blade 4
Cutting edge, end bit 6
Ripper 8

Work equipment

Cylinder stay

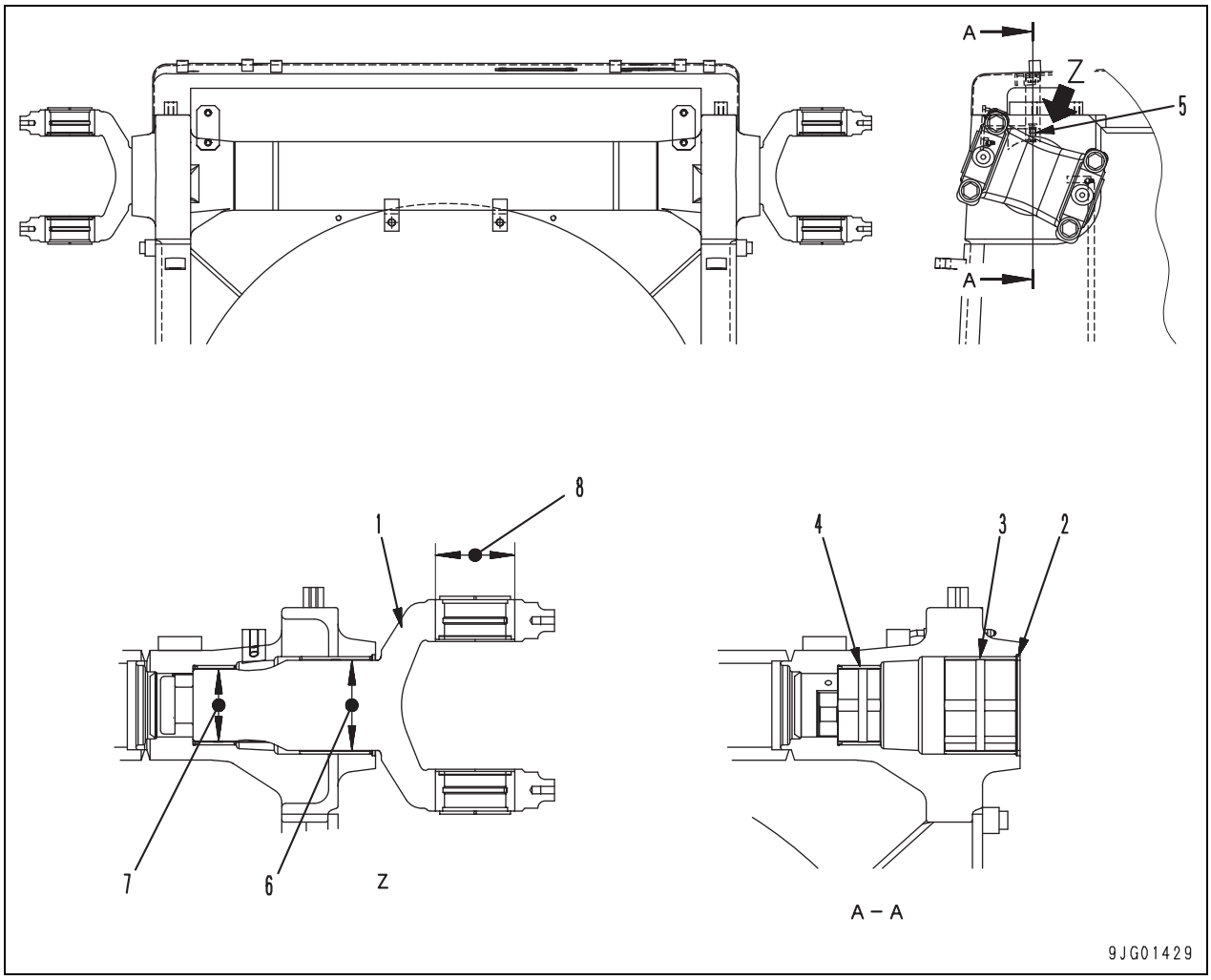

1. Yoke
2. Dust seal
3. Bushing
4. Bushing
5. Grease nipple

Unit: mm

No.	Check item	Criteria					Remedy
		Standard size	Tolerance		Standard clearance	Clearance limit	
			Shaft	Hole			
6	Clearance between cylinder yoke and bushing	125	–0.172 –0.235	+0.063 0	0.172 – 0.298	—	Replace
7	Clearance between cylinder yoke and bushing	100	–0.170 –0.224	+0.054 0	0.170 – 0.278	—	
8	Clearance between bushing of cylinder support shaft and yoke	110	0 –0.035	+0.054 0	0 – 0.089	0.5	

Blade

Sigma-tilt dozer

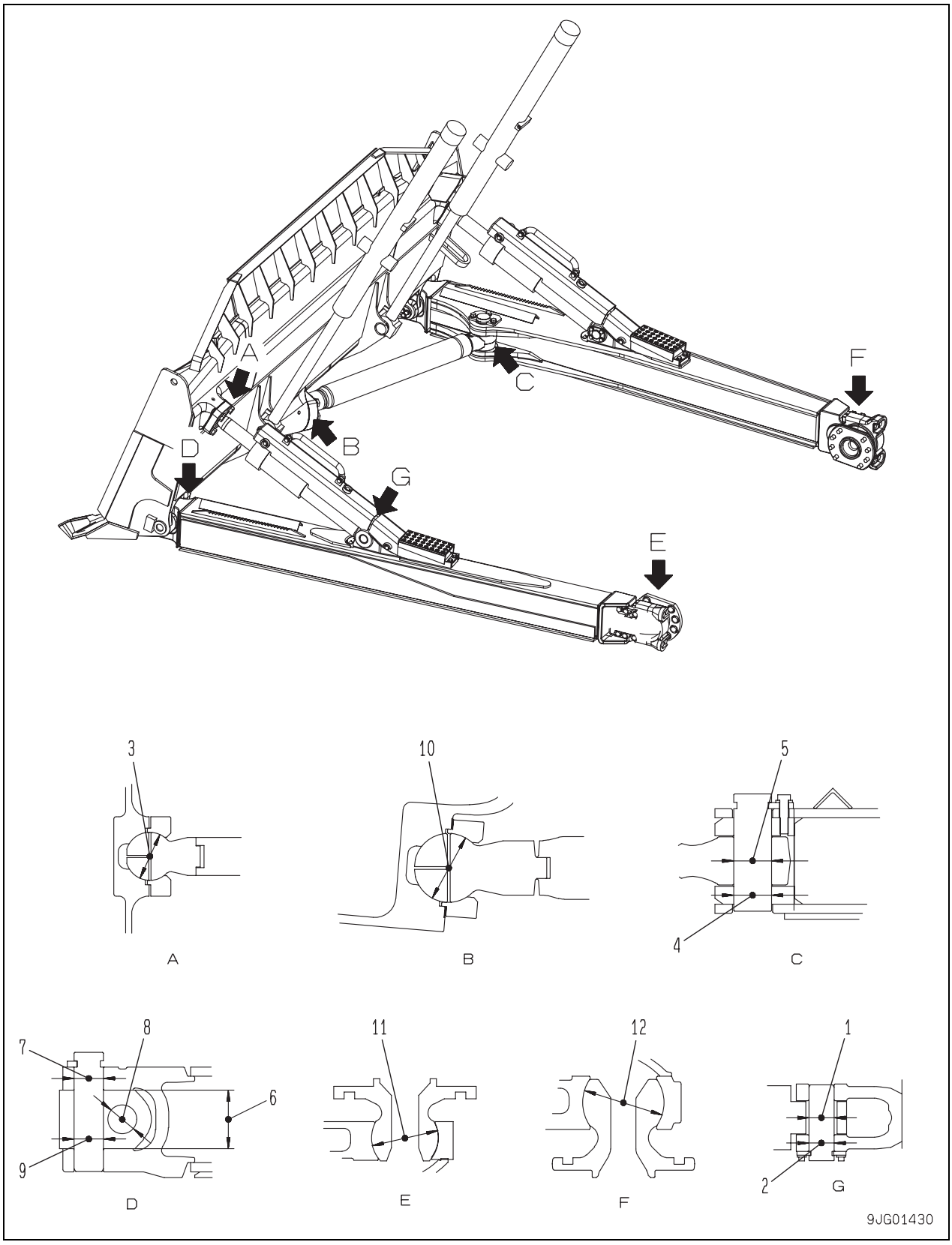

Unit: mm

No.	Check item	Criteria					Remedy
		Standard size	Tolerance		Standard clearance	Clearance limit	
			Shaft	Hole			
1	Clearance between brace and pin	60	–0.3 –0.5	+0.174 +0.100	0.4 – 0.674	2	Replace
2	Clearance between brace pin and bracket	60	–0.3 –0.5	+0.5 +0.2	0.5 – 1.0	2	Adjust shims or replace
3	Clearance between brace spherical surface and cap	115	–0.2 –0.3	+0.3 0	0.2 – 0.6	1	Replace
4	Clearance between brace pin and bracket	90	–0.3 –0.5	+0.3 +0.1	0.4 – 0.8	2	
5	Clearance between brace pin and brace	90	–0.3 –0.5	+0.5 +0.3	0.6 – 1.0	2	
6	Clearance between joint and blade bracket	140	–0.2 –0.7	+0.5 +0.3	0.5 – 1.2	2	
7	Clearance between frame pin and joint	70	–0.5 –0.6	+0.3 0	0.5 – 0.9	3	
8	Clearance between bracket pin and blade bracket	70	–0.5 –0.6	+0.3 0	0.5 – 0.9	3	
9	Clearance between blade bracket pin and joint	70	–0.5 –0.6	+0.3 0	0.5 – 0.9	3	
10	Clearance between center brace spherical surface and cap	165	–0.2 –0.3	+0.3 0	0.2 – 0.6	1	Adjust shims or replace
11	Clearance between trunnion spherical surface and cap	195	–0.5 –1.0	+0.5 0	0.5 – 1.5	8	Replace

Cutting edge, end bit

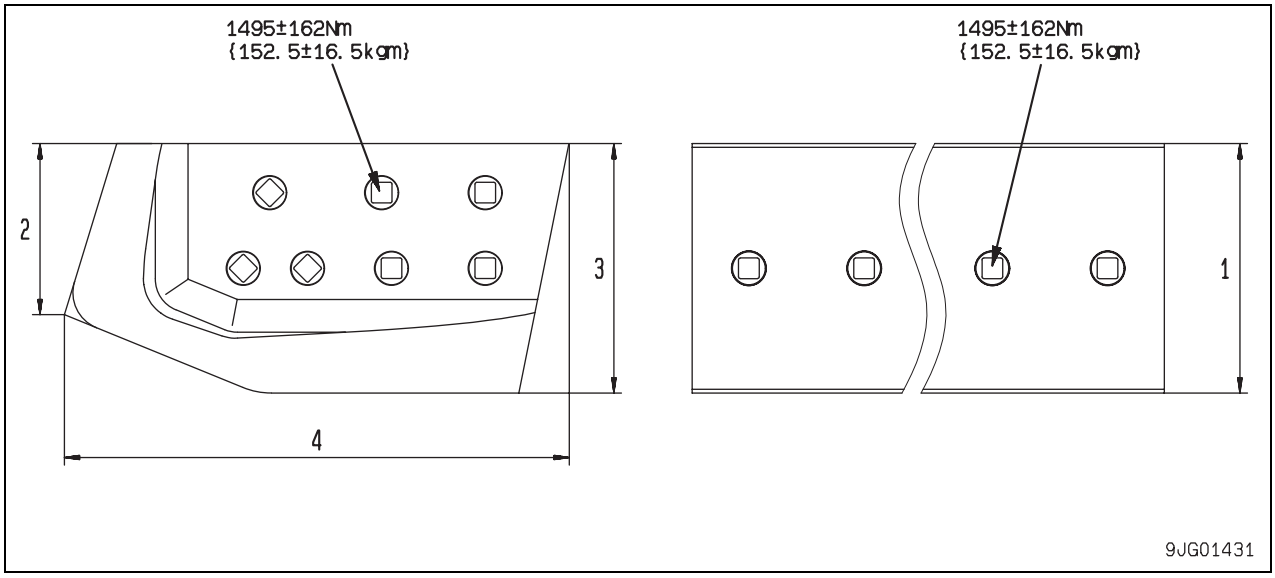

Unit: mm

No.	Check item	Criteria		Remedy
1	Height of cutting edge	Standard size	Repair limit	Turn or replace
		330	260 (215 to turning)	
2	Height of outside of end bit	300	300	Replace
3	Height of inside of end bit	330	260	
4	Width of end bit	640	500	

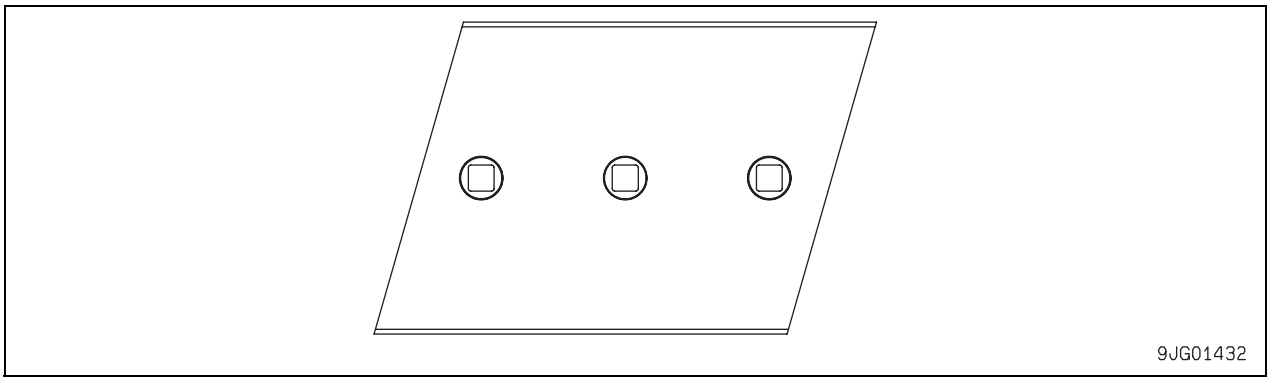

Ripper

Variable multi-shank ripper

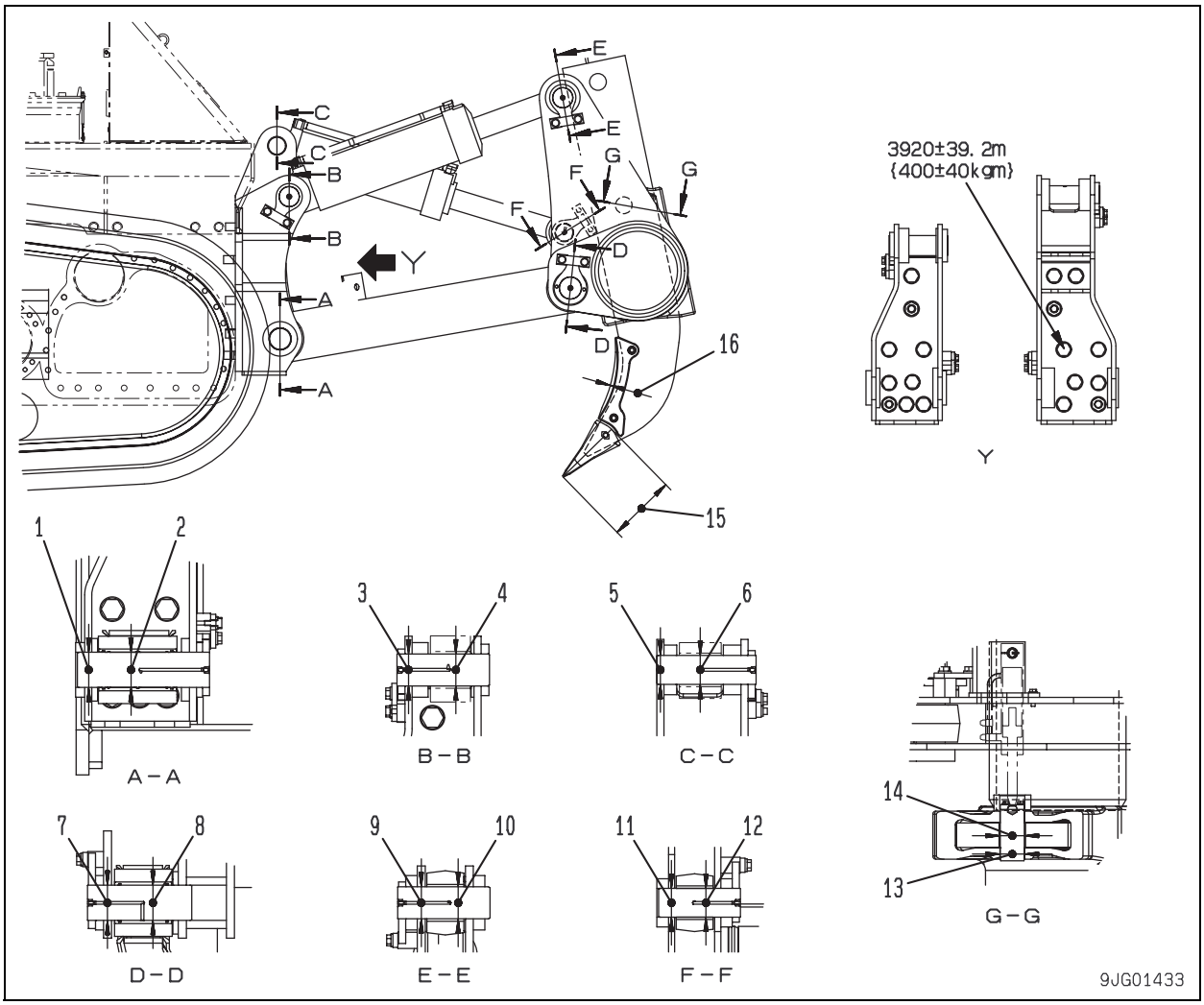

Unit: mm

No.	Check item	Criteria					Remedy
		Standard size	Tolerance		Standard clearance	Clearance limit	
			Shaft	Hole			
1,7	Clearance between arm mounting pin and mounting bracket or beam bracket	110	–0.036 –0.090	+0.207 +0.120	0.156 – 0.297	1.5	Replace
2,8	Clearance between arm mounting pin and bushing	110	–0.036 –0.090	+0.459 +0.369	0.405 – 0.549	1.5	
3,9	Clearance between tilt cylinder mounting pin and mounting bracket or beam bracket	100	–0.036 –0.090	+0.207 +0.120	0.156 – 0.297	1.5	
4,10	Clearance between tilt cylinder mounting pin and bushing	100	–0.036 –0.090	+0.457 +0.370	0.406 – 0.547	1.5	
5,11	Clearance between lift cylinder mounting pin and mounting bracket or beam bracket	90	–0.036 –0.090	+0.207 +0.120	0.156 – 0.297	1.5	
6,12	Clearance between lift cylinder mounting pin and shank bushing	90	–0.036 –0.090	+0.207 +0.120	0.156 – 0.297	1.5	
13	Clearance between shank mounting pin and shank holder	Shaft 75 Hole 77	+0.300 –0.300	+0.300 –0.300	1.400 – 2.600	10.0	
14	Clearance between shank mounting pin and shank hole	Shaft 75 Hole 80	+0.300 –0.300	+1.000 –1.000	3.700 – 6.300	15.0	
15	Wear of point	Standard size		Repair limit			
		335		225			
16	Wear of protector	115		90			

Variable giant ripper

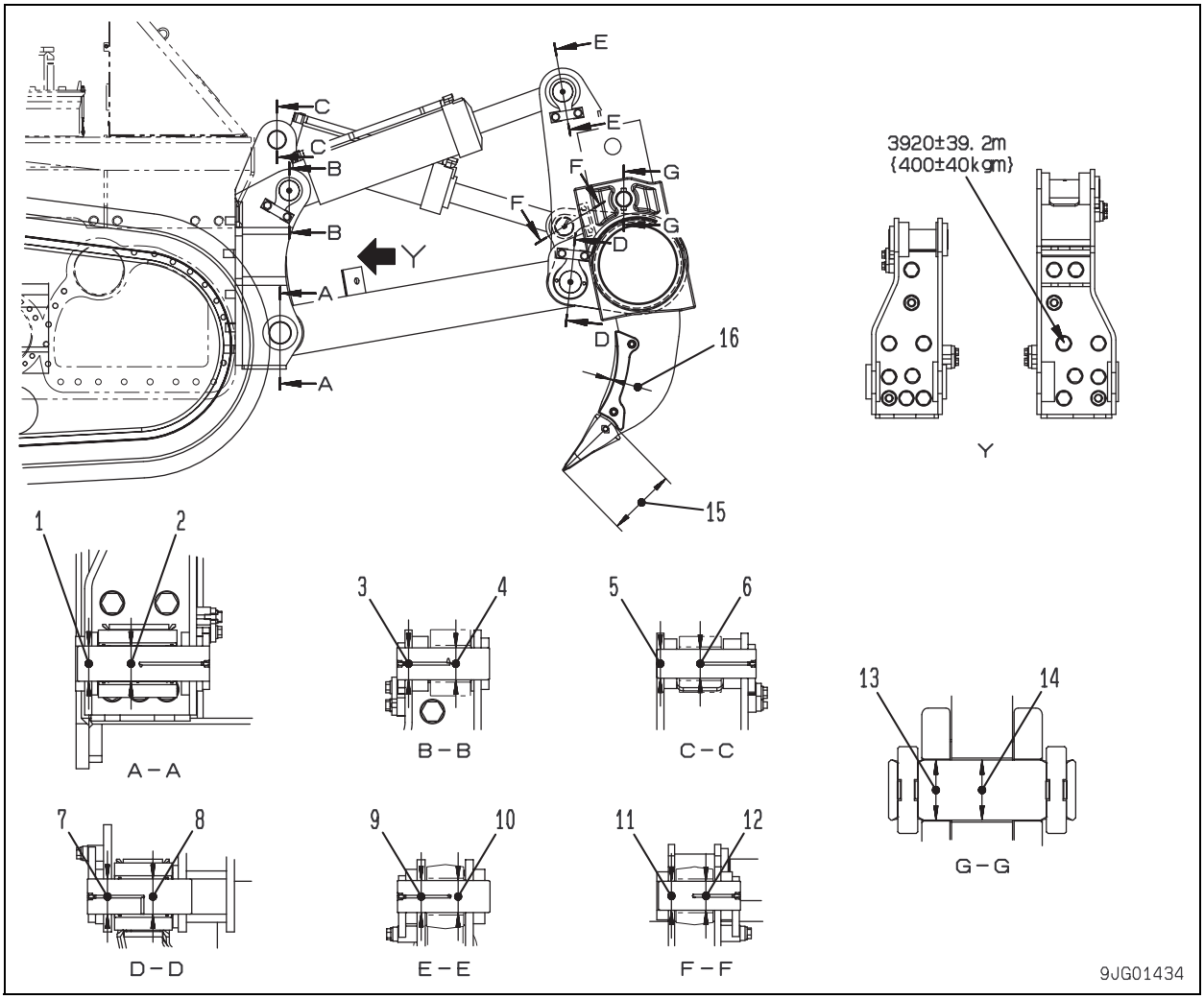

Unit: mm

No.	Check item	Criteria					Remedy
		Standard size	Tolerance		Standard clearance	Clearance limit	
			Shaft	Hole			
1,7	Clearance between arm mounting pin and mounting bracket or beam bracket	110	–0.036 –0.090	+0.207 +0.120	0.156 – 0.297	1.5	Replace
2,8	Clearance between arm mounting pin and bushing	110	–0.036 –0.090	+0.459 +0.369	0.405 – 0.549	1.5	
3,9	Clearance between tilt cylinder mounting pin and mounting bracket or beam bracket	100	–0.036 –0.090	+0.207 +0.120	0.156 – 0.297	1.5	
4,10	Clearance between tilt cylinder mounting pin and bushing	100	–0.036 –0.090	+0.457 +0.370	0.406 – 0.547	1.5	
5,11	Clearance between lift cylinder mounting pin and mounting bracket or beam bracket	90	–0.036 –0.090	+0.207 +0.120	0.156 – 0.297	1.5	
6,12	Clearance between lift cylinder mounting pin and shank bushing	90	–0.036 –0.090	+0.207 +0.120	0.156 – 0.297	1.5	
13	Clearance between shank mounting pin and shank holder	Shaft 75 Hole 77	+0.300 –0.300	+0.300 –0.300	1.400 – 2.600	10.0	
14	Clearance between shank mounting pin and shank hole	Shaft 75 Hole 80	+0.300 –0.300	+1.000 –1.000	3.700 – 6.300	15.0	
15	Wear of point	Standard size		Repair limit			
		335		225			
16	Wear of protector	115		90			

D155AX-6 Bulldozer

Form No. SEN00608-00

© 2005 KOMATSU
All Rights Reserved
Printed in Japan 12-05 (02)

BULLDOZER

D155AX-6

Machine model	Serial number
D155AX-6	80001 and up

10 Structure, function and maintenance standard

Cab and its attachments

Cab and its attachments 2
Cab mount + ROPS pin 2
ROPS cab 3
Air conditioner 4

Cab and its attachments

Cab mount + ROPS pin

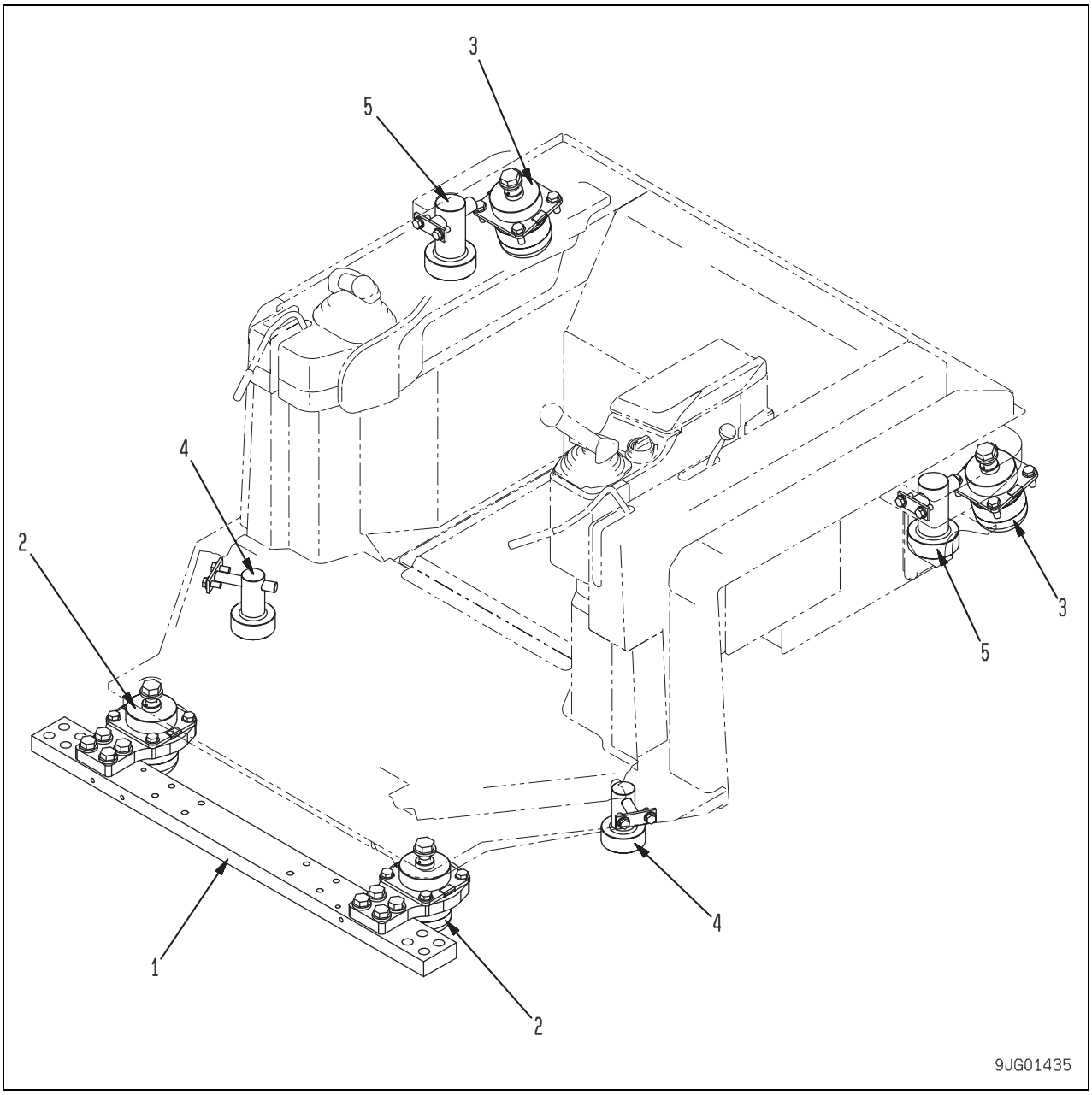

1. Support
2. Damper mount (front)
3. Damper mount (rear)
4. ROPS pin (front)
5. ROPS pin (rear)

Outline

- Viscous mounts are installed at two places at the front and two places at the rear to secure the floor frame and cab.
- An oil-filled damper mount is used to absorb the vibration.
- The ROPS pins are installed to 2 places each at the front and rear sections to fix the ROPS (built in the cab) when the machine rolls over.

ROPS cab

Cab assembly

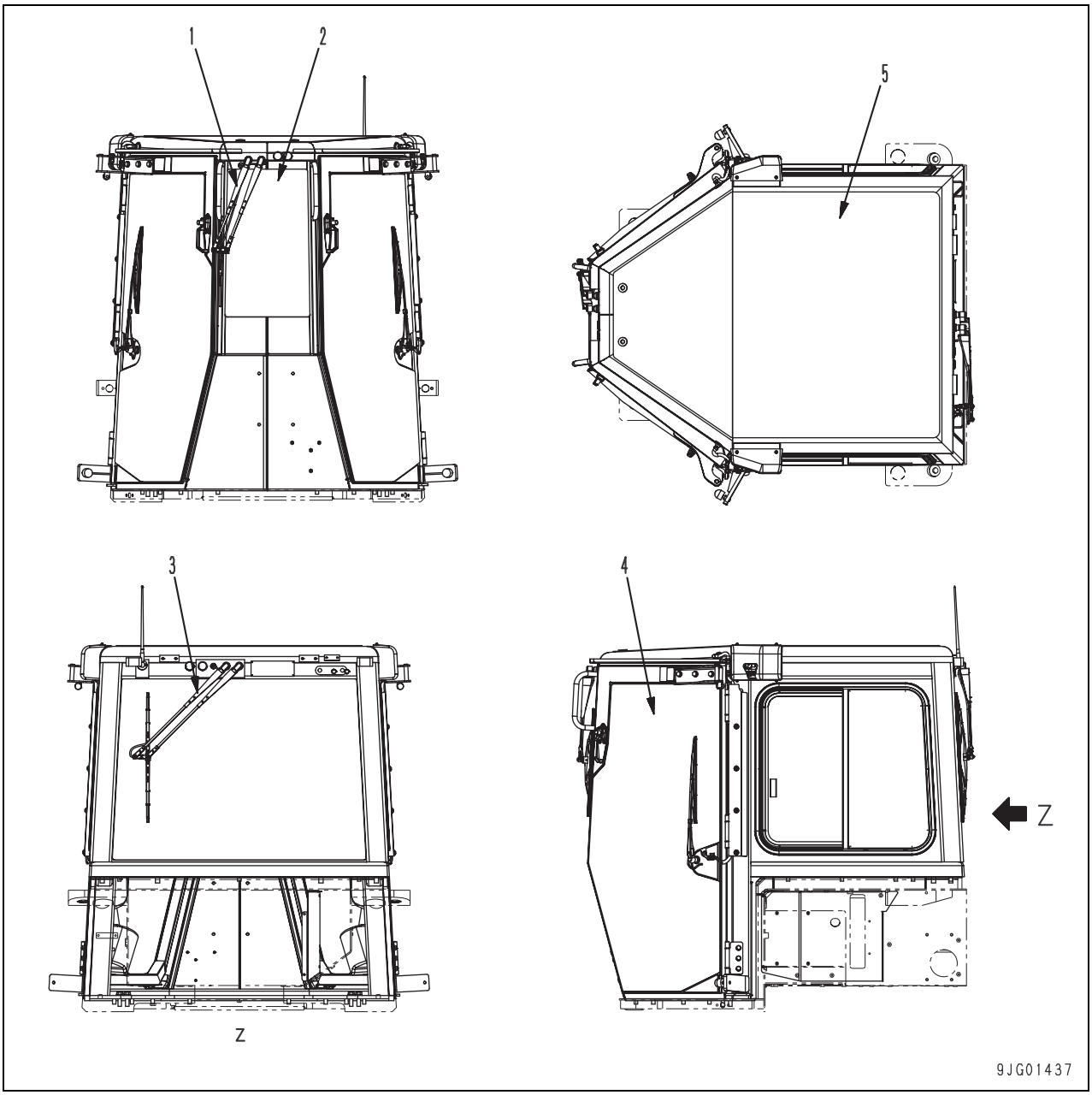

1. Front wiper
2. Front glass
3. Rear wiper
4. Door
5. ROPS sub (built in CAB)

Air conditioner

Air conditioner piping

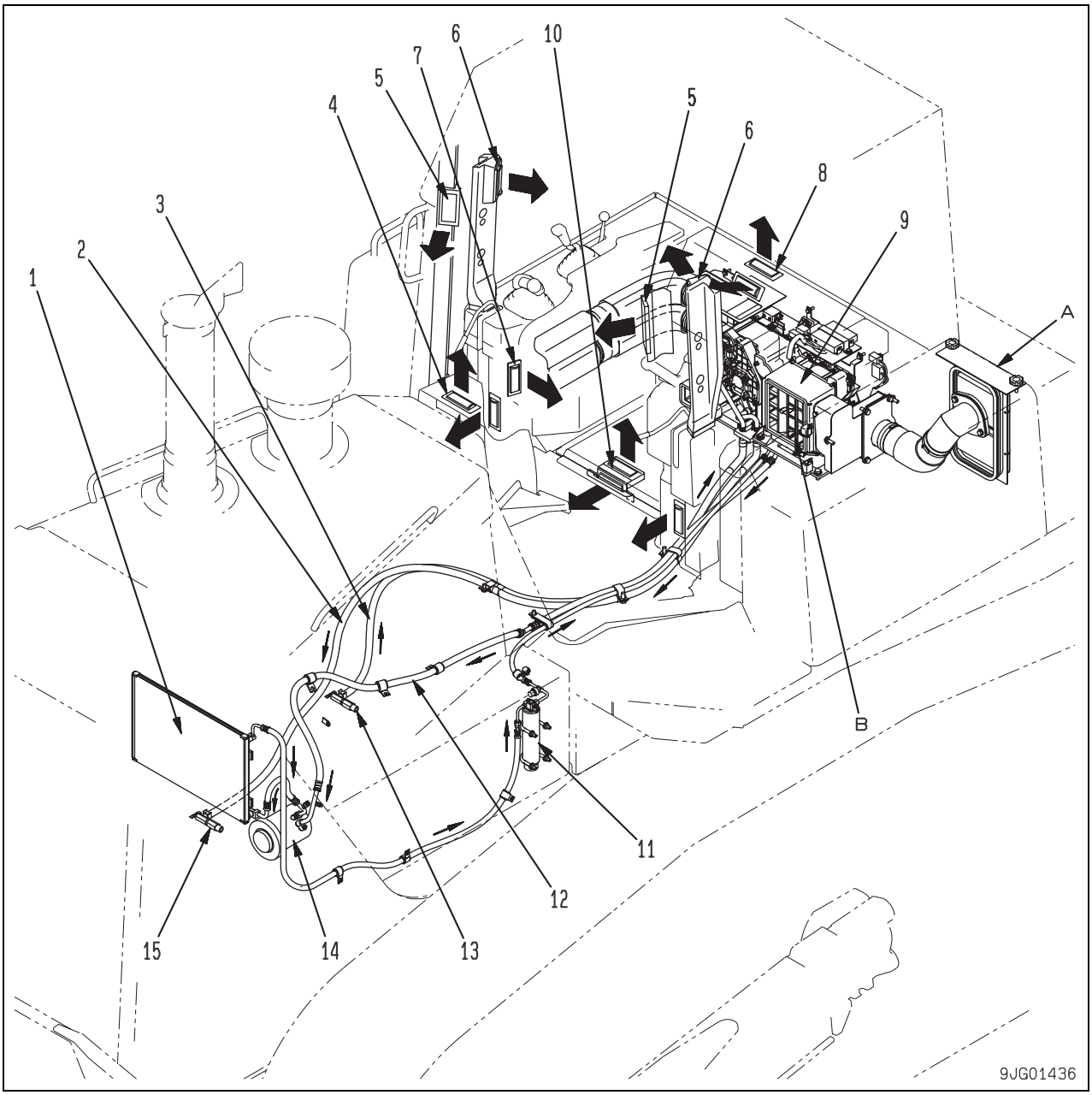

1. Condenser
2. Hot water return piping
3. Hot water pick-up piping
4. Front window defroster
5. Side window defroster
6. Air outlet for face
7. Air outlet for center
8. Air outlet for rear
9. Air conditioner unit
10. Air outlet for foot
11. Receiver tank
12. Refrigerant piping
13. Valve (hot water outlet)
14. Air conditioner compressor
15. Valve (hot water inlet)

A: Fresh air
B: Recirculated air

D155AX-6 Bulldozer

Form No. SEN00609-00

© 2005 KOMATSU
All Rights Reserved
Printed in Japan 12-05 (02)

BULLDOZER

D155AX-6

Machine model	Serial number
D155AX-6	80001 and up

10 Structure, function and maintenance standard

Electrical system

Electrical system 2
Engine control 2
Engine control system 3
Deceleration potentiometer 4
Monitor system 5
Sensors 23
Palm command control system 26

Electrical system

Engine control

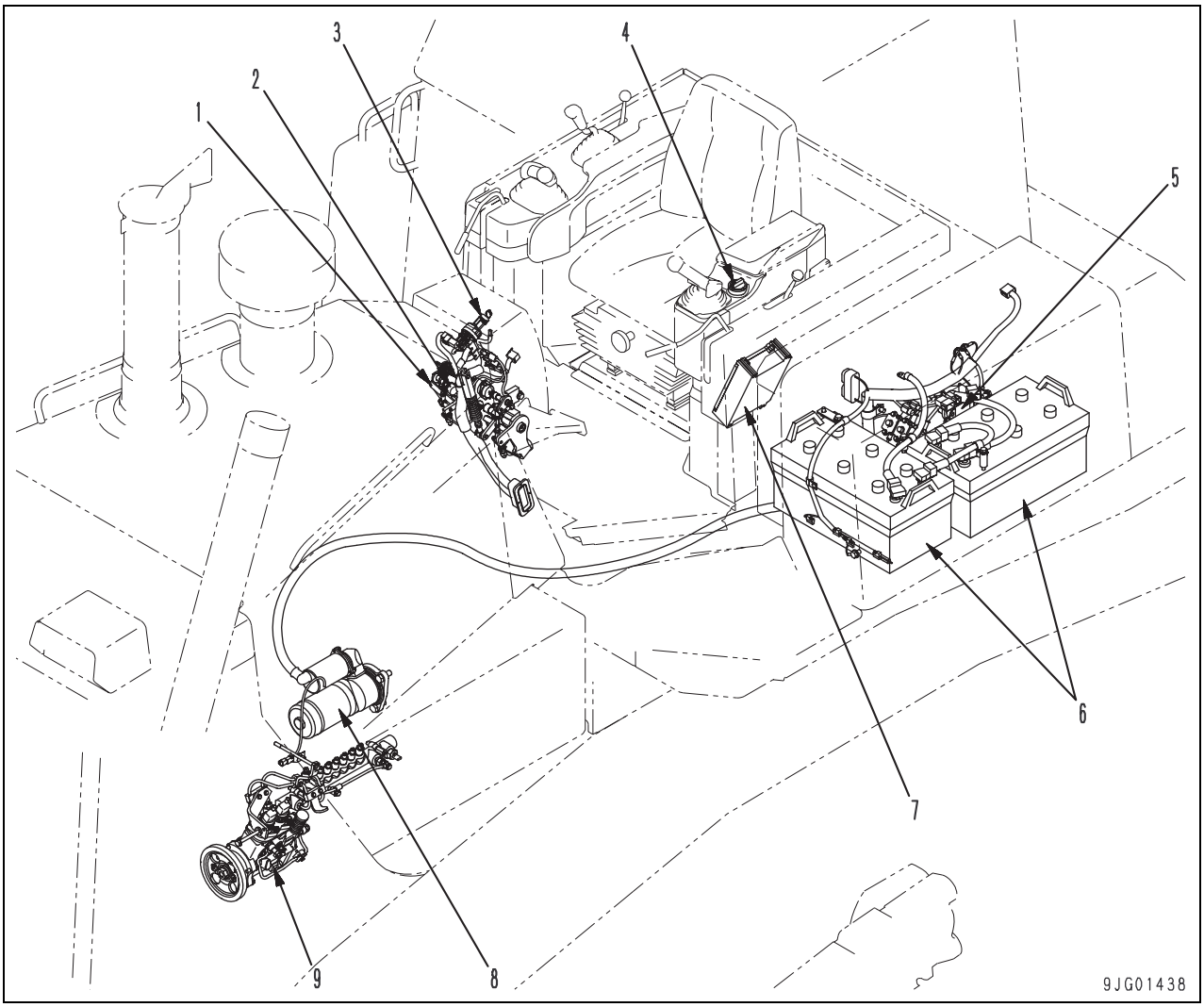

1. Decelerator pedal
2. Decelerator potentiometer
3. Starter switch
4. Fuel control dial
5. Battery relay
6. Battery
7. Power train controller
8. Starter
9. Fuel supply pump

Outline

- The throttle signals of the fuel control dial are sent to the power train controller and processed together with the 3rd throttle signal, and then sent as the throttle commands together with the throttle signals of the decelerator pedal to the engine throttle controller. The engine throttle controller controls the engine according to the commands.

Engine control system

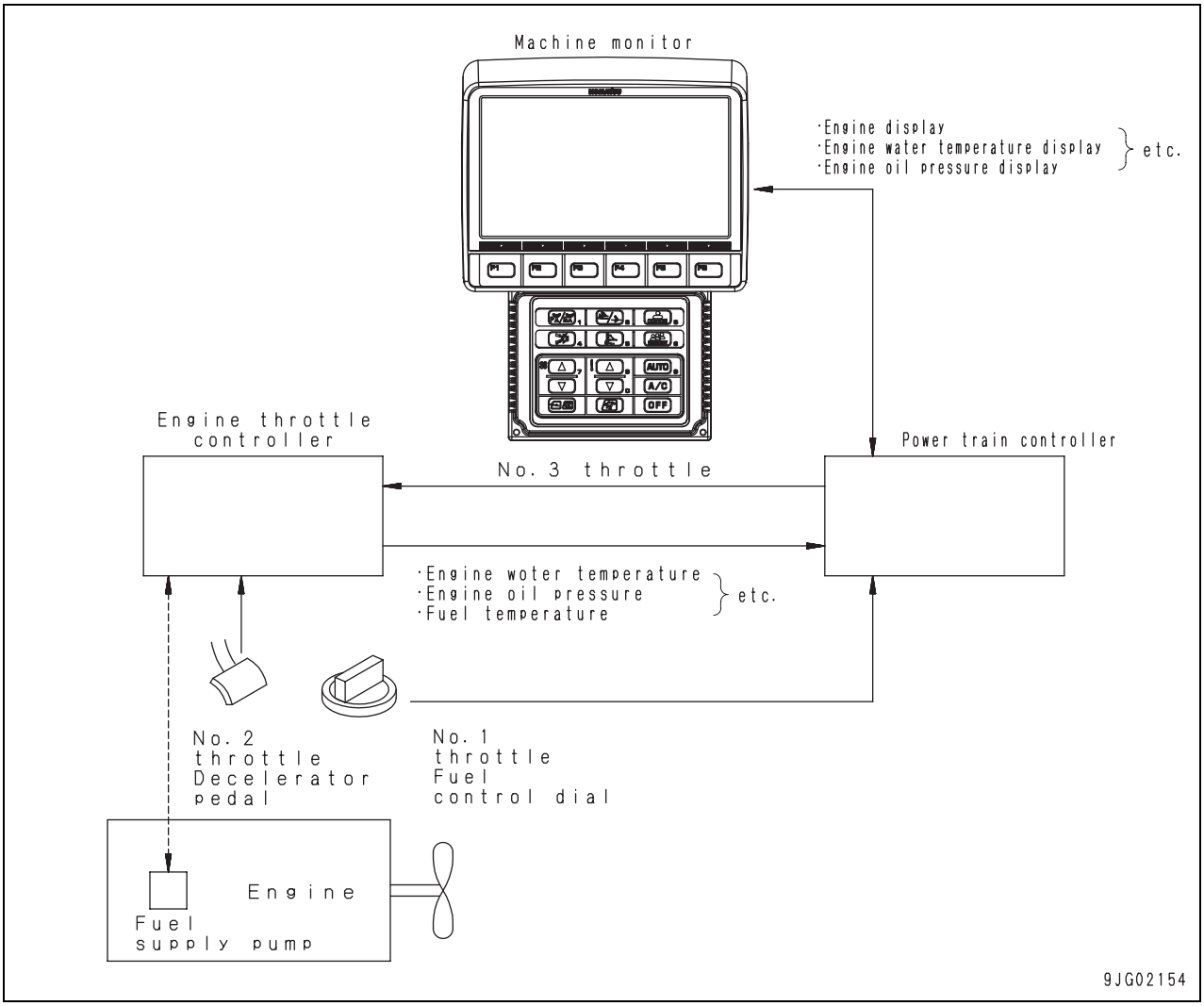

Outline

- The engine throttle controller receives the fuel control dial signal of the 1st throttle, decelerator pedal signal of the 2nd throttle, and 3rd throttle signal which is the control signal from the power train controller, and then controls the fuel supply pump according to the command signal having the lowest engine speed.
  The control signals of the 3rd throttle are as follows.
  (1) Auto deceleration (F3, R3, F2, R2)
  (2) Neutral deceleration
- The power train controller calculates a proper engine speed from information items (1), (2), etc.
  and sends it as the 3rd throttle signal to the engine throttle controller.
- The information of the engine throttle controller is possessed jointly by the other controllers through the network and used for the optimum control of the engine and machine body.
- The auto deceleration is a function of setting the engine speed low temporarily when the travel direction is changed from F3, R3, F2, and R2 (to protect the transmission clutch).
- The neutral deceleration is a function of limiting the high idle speed when the transmission is set in neutral.

Deceleration potentiometer

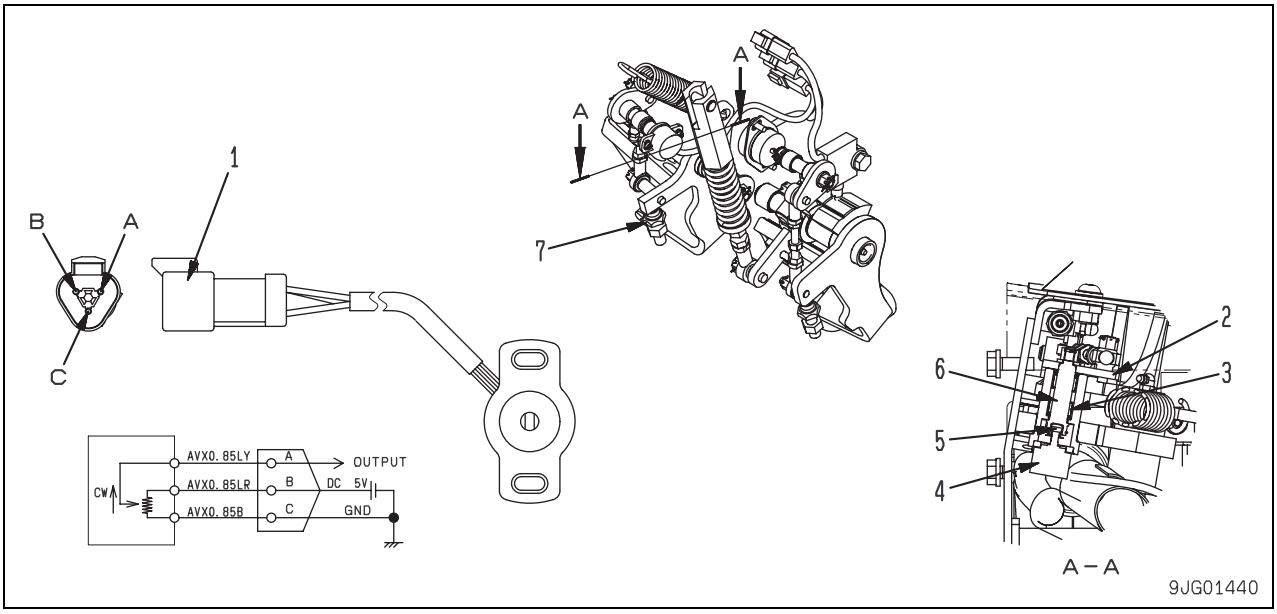

1. Connector
2. Lever
3. Body
4. Potentiometer
5. Cuppling
6. Shaft
7. Stopper

Outline

- The deceleration potentiometer is installed to the inside of the dashboard and connected to the decelerator pedal by linkage.
- If the decelerator pedal is pressed, it rotates the throttle potentiometer shaft through the linkage and the potentiometer resistance changes.
  Constant voltage is applied between pins (A) and (C) of the potentiometer and a voltage signal is sent through pin (B) to the engine controller according to the position of the decelerator pedal.

Monitor system

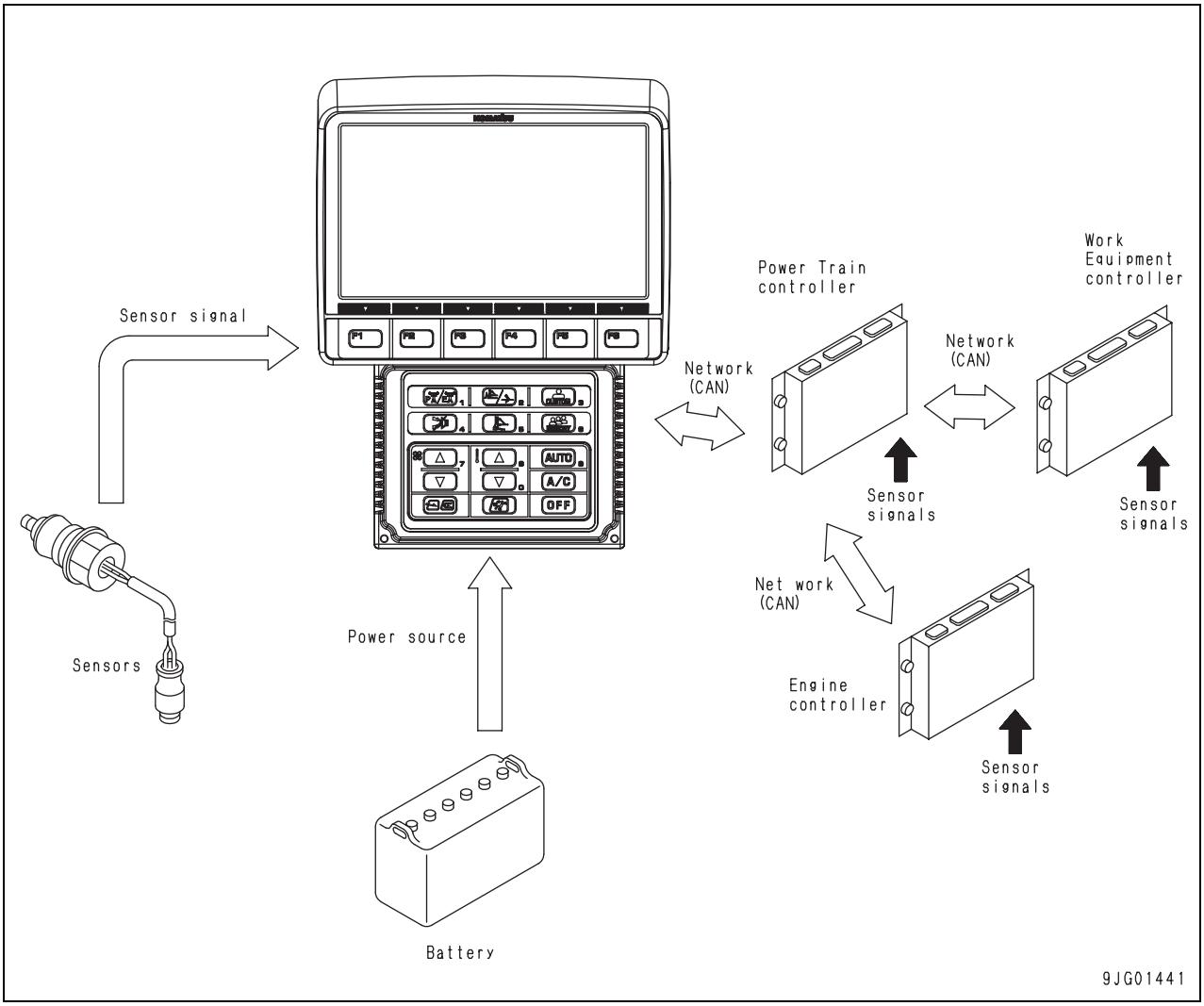

- The monitor system monitors the machine condition with the sensors installed to various parts of the machine and processes and displays the obtained information on the panel quickly to notify the operator of the machine condition.
  The main display sections and functions of the panel are as follows.
  1) Monitor unit which turns on the alarm when the machine has a trouble.
  2) Gauge unit which constantly displays the machine condition (coolant temperature, torque converter oil temperature, fuel level, etc.)
  3) Function of displaying error codes.
  4) Function of monitoring the current and voltage of the sensors and solenoids,
- The CPU (Central Processing Unit) in the monitor panel displays and outputs various information items processed by the power train controller. The display unit is LCD (Liquid Crystal Display)

Processing in machine monitor (Common to all specifications)

Display of machine monitor

Contents and conditions of processing	Method	Flow of signals
1. Display of travel direction and gear speed. • F1, R3, etc. are notified by CAN according to information of power train controller.	CAN	Each sensor/solenoid-controller-machine monitor
2. Display of gauges of fuel level, engine coolant temperature, etc. • Controller converts the sensor signals into gauge numbers and sends them to the machine monitor by CAN.	CAN	
3. Display of trouble • When the machine has a trouble, the corresponding failure code is notified to the machine monitor by CAN. • Which one should be turned on, the buzzer or the caution lamp, is notified, too. 1) In normal state User code, service code 2) In trouble history display mode The service code (6-digit code) and the following items are displayed • Time after first occurrence • Time after latest occurrence • Number of past occurrences The machine monitor displays the code.	CAN	

Display of monitoring condition

Contents and conditions of processing	Method	Flow of signals
1. The communication conditions of each sensor, each solenoid, and CAN are displayed. • The item Nos. and device conditions are notified to the machine monitor by CAN. • The machine monitor displays the items and each value.	CAN	Each sensor-controller-machine monitor
2. Each items is selected by using the cursor switches and confirmation switch.	CAN	

Other items

	Contents and conditions of processing	Method	Flow of signals
01	Monitoring		
02	Trouble history		
03	Maintenance history		
04	Maintenance mode change		
05	Telephone number set		
06	Default		
07	Adjustment		
08	PM clinic		
09	Reduced cylinders mode operation		
10	No injection cranking		
11	Fuel consumption display		
12	—		
13	Service message display		
88	Screen adjustment ★		
89	—		

★ See testing and adjusting, special functions of machine monitor.

Machine monitor

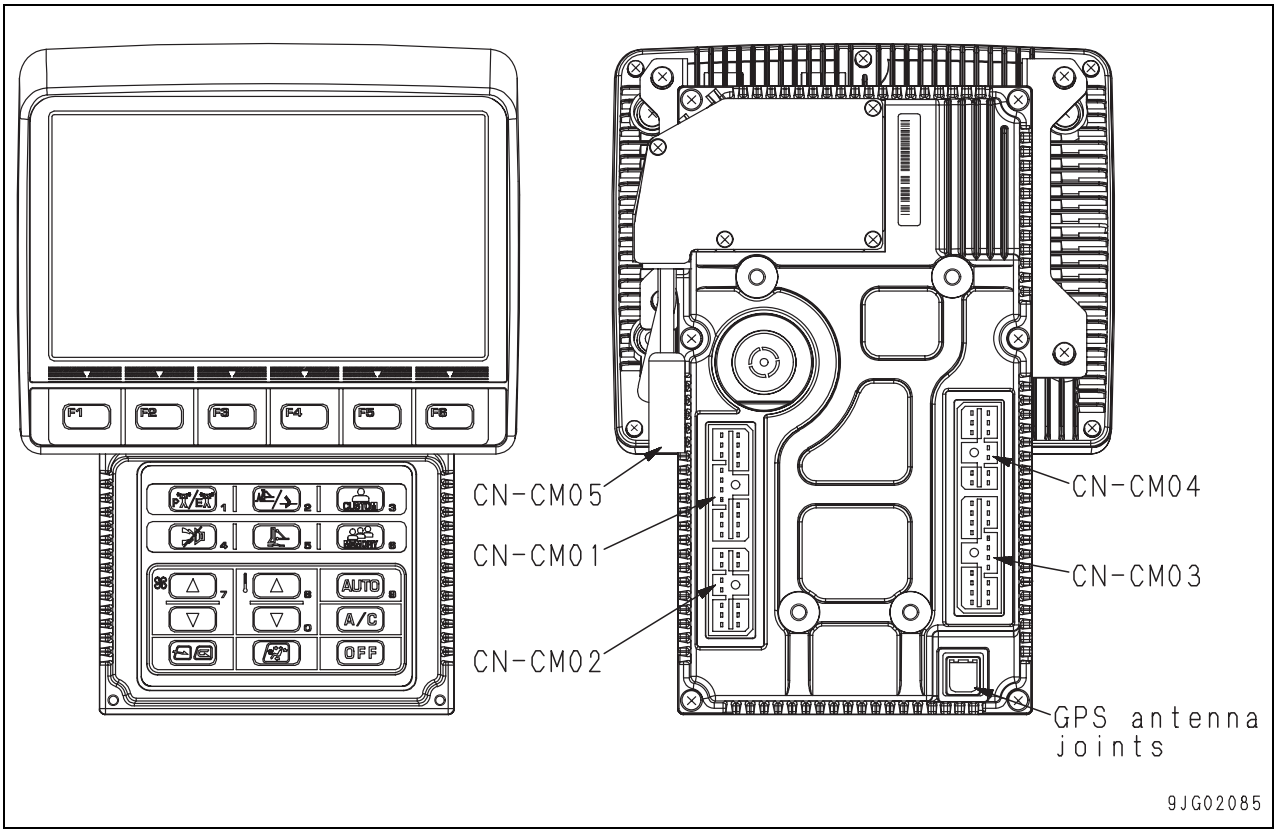

Outline

- The machine monitor has the functions to display various items and the functions to select modes and electric parts.
- The machine monitor has a CPU (Central Processing Unit) in it to process, display, and output the information.
- The monitor display employs an LCD (Liquid Crystal Display). The switches are flat sheet switches.

Precautions on the machine monitor display

- The liquid crystal display panel may have black spots (which do not light up) or bright spots (which stay on).
  Products having 10 or less black or bright spots conform the product specification; such the condition is quite normal.
- Battery voltage may suddenly drop at engine-start due to ambient temperature or the condition of the battery. The machine monitor display may temporarily disappear if it happens; it is quite normal.
- Continuous operation of the machine monitor may display blue bright spots on the screen having a black background; it is quite normal.
  The screen normally displayed on the monitor has a blue or white background. For this reason, blue spots will not cause any problem (since the liquid crystal lights up red, blue, and green spots when displaying white).

Input and output signals

CN-CM01

Pin No.	Signal name	Input/ output
1	Battery power (+24V constantly)	Input
2	Battery power (+24V constantly)	Input
3	Battery power GND	—
4	Battery power GND	—
5	Wake-up	Input/ Output
6	Relay output	Output
7	Chassis signal GND	—
8	Hydraulic oil pressure	—
9	Fuel level	Input
10	NC(*)	—
11	Charge amount	Input
12	Chassis analog signal GND	—
13	Light switch	Input
14	Key switch (ACC)	Input
15	Key switch (C)	Input
16	Preheating	Input
17	NC(*)	—
18	NC(*)	—

*: Never connect to NC or malfunctions or failures will occur.

CN-CM02

Pin No.	Signal name	Input/ output
1	NC(*)	—
2	NC(*)	—
3	Coolant level sensor	Input
4	NC(*)	—
5	NC(*)	—
6	NC(*)	—
7	Chassis signal GND	—
8	CAN terminating resistance	—
9	CAN_H	Input/ Output
10	CAN_L	Input/ Output
11	NC(*)	—
12	NC(*)	—

*: Never connect to NC or malfunctions or failures will occur.

CN-CM03

Pin No.	Signal name	Input/ output
1	RS232C CD for communication terminal	Input
2	RS232C RXD for communication terminal	Input
3	RS232C SG for communication terminal	—
4	Signal GND for communication terminal control	—
5	Communication terminal selection signal	Input
6	RS232C RTS for communication terminal	Output
7	RS232C TXD for communication terminal	Output
8	RS232C DTR for communication terminal	Output
9	RS232C DTR for communication terminal	Input
10	RS232C CTS for communication terminal	Input
11	RS232C RI for communication terminal	Input
12	Power GND for communication terminal	—
13	Input CH1 for communication terminal status	Input
14	Output for communication terminal power control	Output
15	Output CH1 for communication terminal control	Output
16	Output CH2 for communication terminal control	Output
17	Input CH2 for communication terminal status	Input
18	Electric power supply for communication terminal	Output

CN-CM04

Pin No.	Signal name	Input/ output
1	NC(*)	—
2	NC(*)	—
3	NC(*)	—
4	NC(*)	—
5	NC(*)	—
6	NC(*)	—
7	NC(*)	—
8	NC(*)	—
9	NC(*)	—
10	NC(*)	—
11	NC(*)	—
12	NC(*)	—

*: Never connect to NC or malfunctions or failures will occur.

CN-CM05

Pin No.	Signal name	Input/ output
1	Electric power supply for camera	Output
2	Camera NTSC signal input 1	Input
3	Camera NTSC signal input 2	Input
4	Camera NTSC signal input 3	Input
5	Electric power supply GND for camera	—
6	Camera signal GND1	—
7	Camera signal GND2	—
8	Camera signal GND3	—

Monitor control, display portion

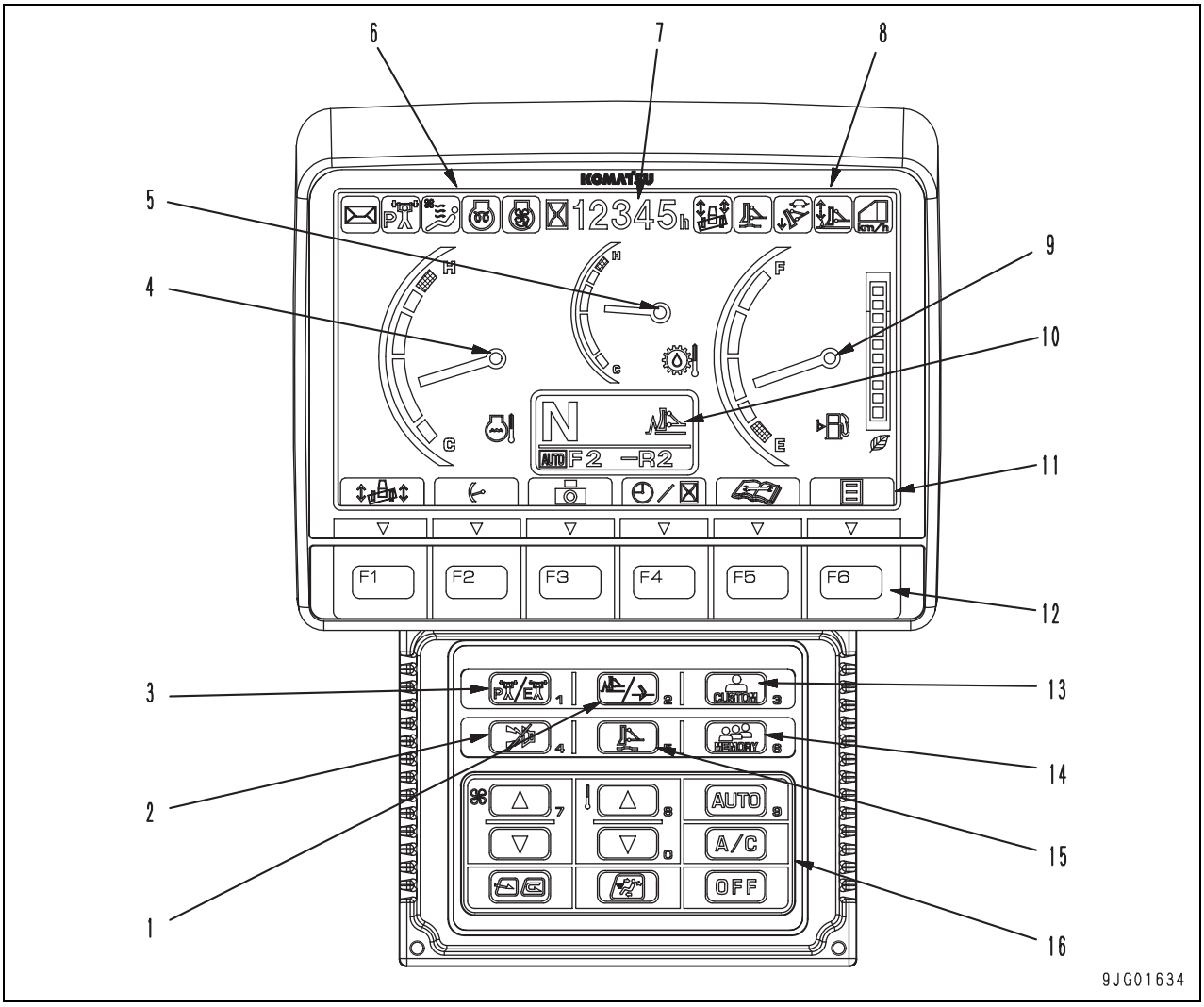

1. Gear shift mode selector switch
2. Buzzer cancel switch
3. Working mode selector switch
4. Engine coolant temperature
5. Multi gauge
6. Pilot display
7. Service meter, clock
8. Hydraulic mode display
9. Fuel level
10. Travel gear speed gear shift mode preset
11. Guidance icon
12. Function switch
13. Custom switch
14. Custom memory switch
15. Float mode switch
16. Air conditioner switch

Machine monitor display

Display category	Symbol	Display item	Display range	Display method
Check	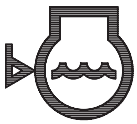 9JG02199	Radiator coolant level	Below low level	Displays when engine is stopped and starting switch is ON Display when normal: OFF Display when abnormal: ON
	9JG02200	Engine oil pressure	When sensor is abnormal or when wiring harness is disconnected	Display when normal: OFF Display when abnormal: ON
	9JG02201	Battery charge	When charge is defective	Displays when starting switch is ON and engine is running Display when normal: OFF Display when abnormal: ON CAUTION lamp flashes
Caution	9JG02200	Engine oil pressure	Below 49.0kPa {0.5kg/cm^2}	Displays when starting switch is ON and engine is running Display when normal: OFF Display when abnormal: ON Alarm buzzer sounds
	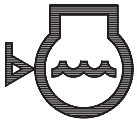 9JG02199	Radiator coolant level	Below low level	
	9JG02202	Engine coolant temperature	When at highest level on engine coolant temperature gauge Above 102°C: Symbol ON Above 105°C: Symbol ON + buzzer	
	9JG02203	Torque converter oil temperature	When at highest level on engine coolant temperature gauge Above 120°C: Symbol ON Above 130°C: Symbol ON + buzzer	
	9JG02204	Hydraulic oil temperature	Above 100°C: Symbol ON Above 110°C: Symbol ON + buzzer	
	SJD04665	Maintenance	When replacement time of filter or oil has been passed	
Pilot	SJD04666	Preheating	When preheating	Lights according to required time determined by engine controller based. It also lights at the time of manual preheat by setting starting switch at preheat position (turning it counterclockwise).

Display category	Symbol	Display item	Display range	Display method
Gauges	9JG02202	Engine coolant temperature	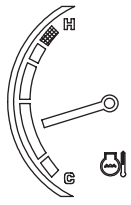 9JG01635	Indicative applicable temperature
	9JG02203	Torque converter oil temperature	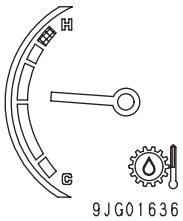 9JG01636	
	9JG02204	Hydraulic oil temperature	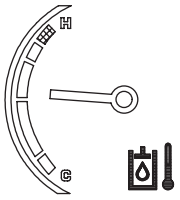 9JG01637	
	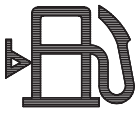 9JG02205	Fuel level	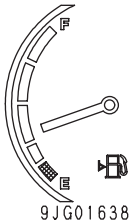 9JG01638	Indicative applicable level
	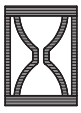 9JG01815	Service meter (Hours meter)	From 0 to 99999	Actuated when the engine is rotating

Gauge

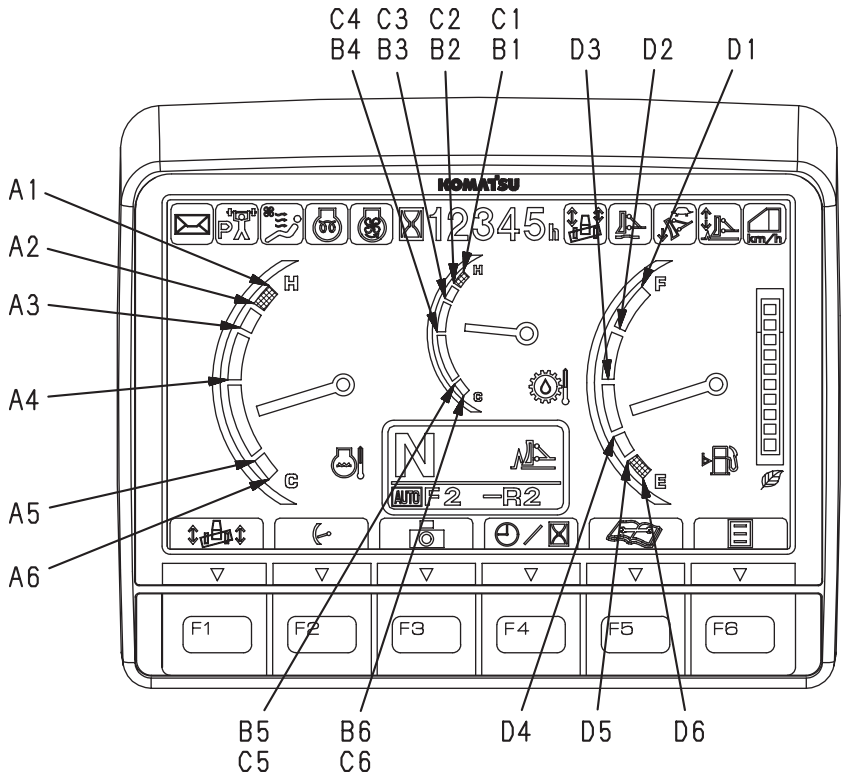

The gauge pointer disappears when information on coolant temperature or hydraulic oil temperature cannot be obtained due to disconnection of CAN.

Gauge	Range	Temperature or volume	Indicator	Buzzer sound
Engine coolant temperature (°C)	A1	105	Red	○
	A2	102	Red	
	A3	100	Off	
	A4	85	Off	
	A5	60	Off	
	A6	30	White	
Power train oil temperature (°C)	B1	130	Red	○
	B2	120	Red	
	B3	118	Off	
	B4	90	Off	
	B5	50	Off	
	B6	0	White	
Hydraulic oil temperature (°C)	C1	110	Red	○
	C2	100	Red	
	C3	98	Off	
	C4	70	Off	
	C5	20	Off	
	C6	0	White	
Fuel level (ℓ)	D1	565	Off	
	D2	425	Off	
	D3	310	Off	
	D4	220	Off	
	D5	150	Off	
	D6	75	Red	

Machine speed

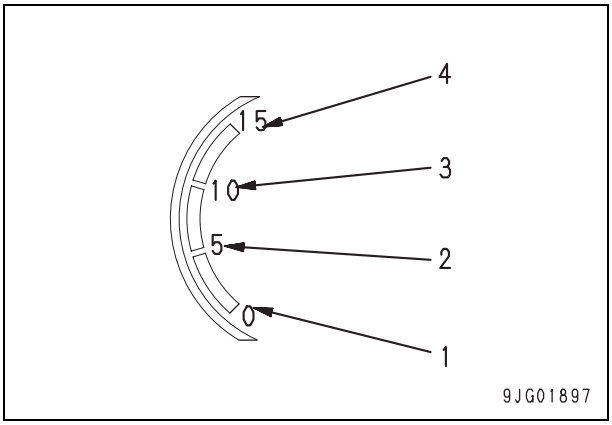

1. 0 km/h
2. 5 km/h
3. 10 km/h
4. 15 km/h

Battery voltage

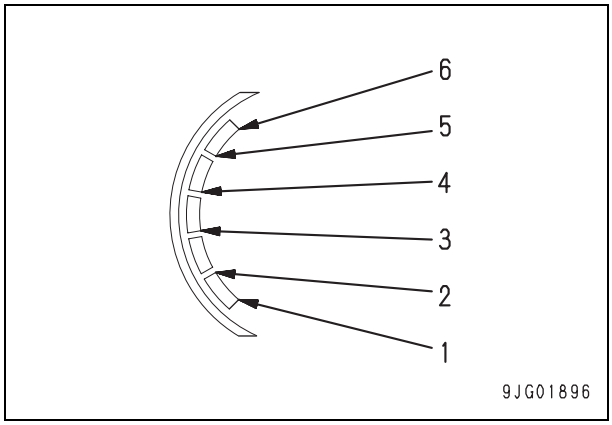

1. 0 V
2. 17 V
3. 20 V
4. 25 V
5. 30 V
6. 31 V

Hydraulic, HSS pump oil pressure

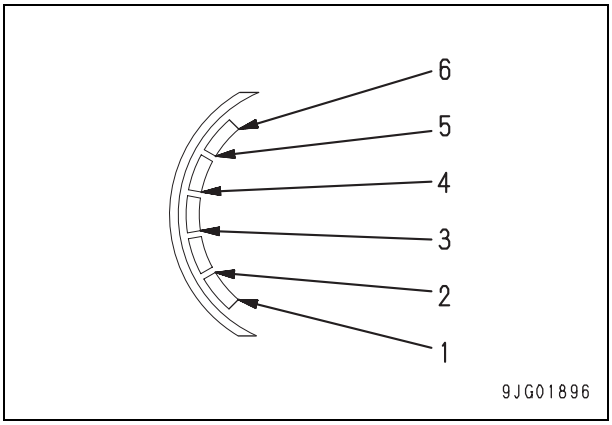

1. 0 MPa
2. 10 MPa
3. 20 MPa
4. 30 MPa
5. 40 MPa
6. 50 MPa

Engine speed

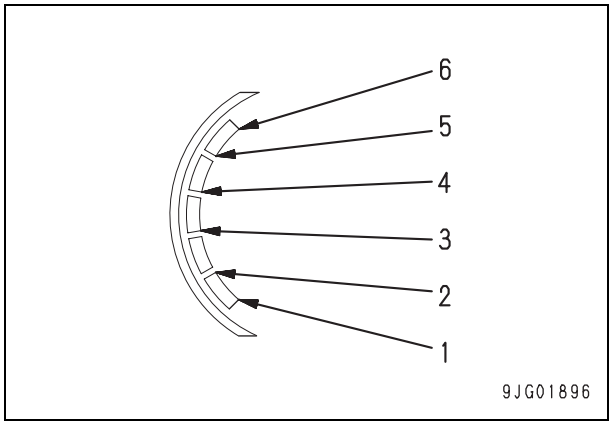

1. 500 rpm
2. 1,000 rpm
3. 1,500 rpm
4. 2,000 rpm
5. 2,500 rpm
6. 3,000 rpm

Engine oil pressure

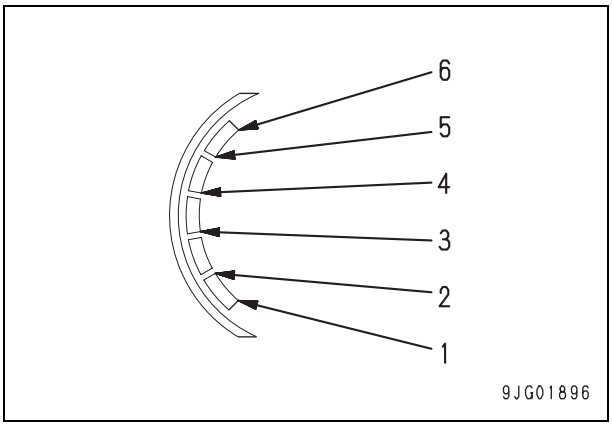

1. 0.0 MPa
2. 0.2 MPa
3. 0.3 MPa
4. 0.4 MPa
5. 0.5 MPa
6. 0.7 MPa

Drawbar pull

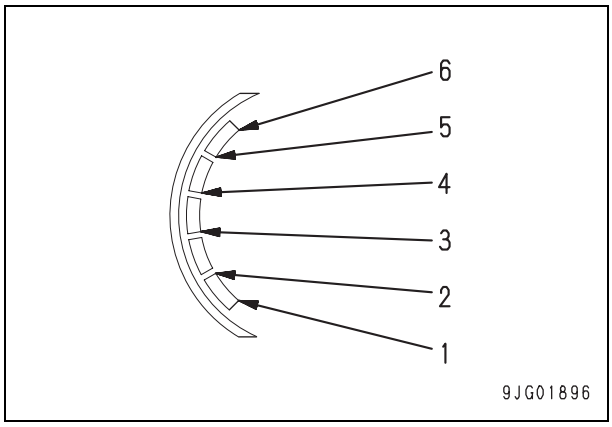

1. 0 W
2. 0.2 W
3. 0.4 W
4. 0.6 W
5. 0.8 W
6. 1.0 W

Guidance icon and function switch

The function switches differ depending on the screen display. Each guidance icon shows the function of the switch below it.
Switches with no guidance icon are disabled.
The functions shown by the guidance icons are as shown in the table below.

Symbol	Switch	Item	Function
9JG01246	F6	Enter	Enters selected/set item.
9JG01247	F5	Return	Returns to previous screen.
9JG01249	F4	Select service meter/clock	Selects service meter and clock alternately.
9JG01250	F5	Select maintenance screen	Selects maintenance screen.
9JG01251	F6	Select user mode screen	Selects user mode screen.
9JG01252	F3	Select item	Selects item on left side (Selects right end item after left end item).
9JG01253	F4	Select item	Selects item on right side (Selects left end item after right end item).
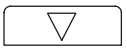 9JG01254	F3	Select item	Selects item on lower side (Selects top item after bottom item)/Resets holding of monitoring.
9JG01255	F4	Select item	Selects item on upper side (Selects bottom item after top item)/Holds monitoring.
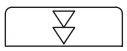 9JG01256	F1	Select item	Selects page on lower side (Selects top page after bottom page).
9JG01257	F2	Select item	Selects page on upper side (Selects bottom page after top page).
DEFAULT 9JG01263	F2	Return to default setting	Returns selected item to default setting. (Used for adjustment of screen.)
START 9JG01264	F1	Start	Starts operation. (Used to start measurement of split fuel consumption on fuel consumption display screen.)
STOP 9JG01382	F1	Stop	Stops operation. (Used to stop measurement of split fuel consumption on fuel consumption display screen.)
CLEAR 9JG01265	F1/F2	Clear	Clears selected/displayed item
SET 9JG01266	F1	Set	Executes setting.
9JG01899	F1	Change tilt mode	Select of single and dual mode (Only dual-tilt dozzer specification)
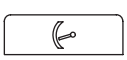 9JG01900	F2	Change multi gauge	Change of multi gauge items

Air conditioner control switch

To operate the air conditioner, use the air conditioner control switches.

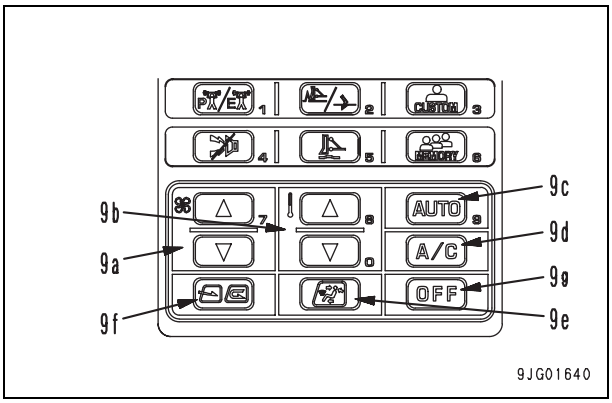

9a : Specifies airflow
9b : Specifies temperature
9c : AUTO
9d : A/C
9e : Switches among air blowing modes
9f : Switches between inside air and outside air
9g : OFF
9a to 9c : Enables entered information simultaneously with switching to the air conditioner control screen below.
9d to 9f : Switches to the air conditioner control screen below. Another pressing switches among modes.
9g : Turns OFF the air conditioner function without switching to the air conditioner screen.

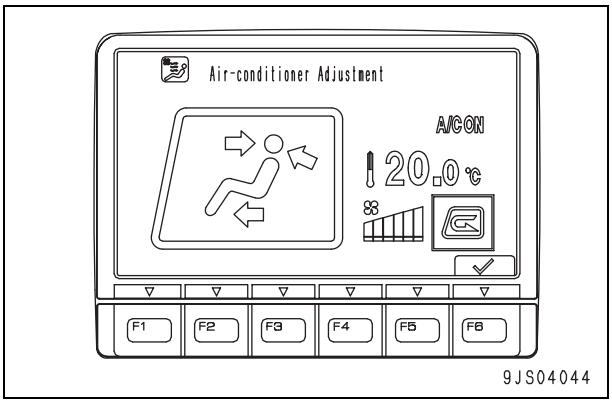

If you do no operation at least 5 sec. with the air conditioner control screen displayed, the window returns to the normal window.

★ When communication with the air conditioner is disconnected, or “spurting-out damper”, “A/M damper”, or “refrigerant” has a problem, the following screen appears.

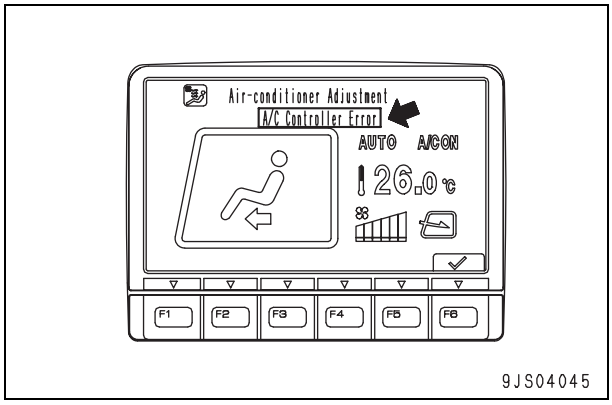

Service meter/time selector function

- Pressing F4 on the normal screen when the service meter is displayed in the top center of the screen switches the display to the time, and doing so when the time is displayed switches the display to the service meter.

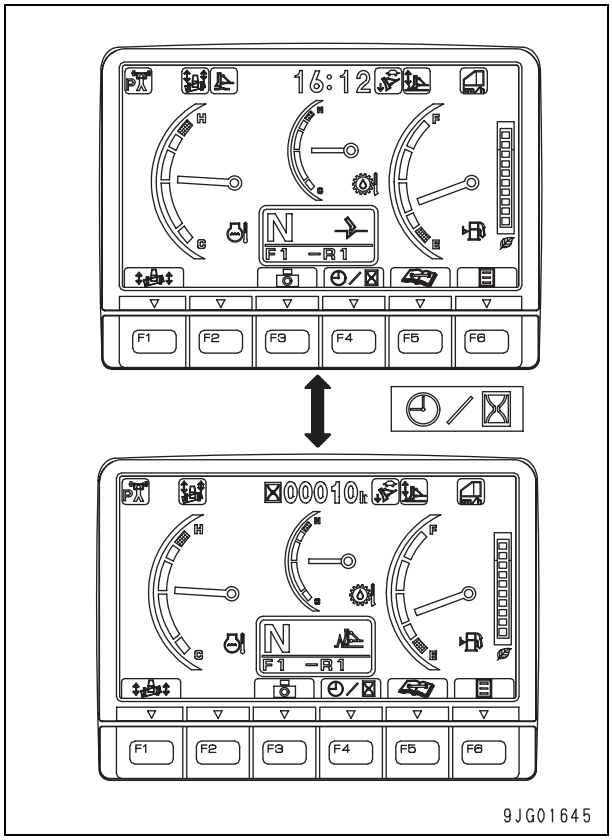

Maintenance function

- Pressing F5 on the normal screen switches to the maintenance screen.

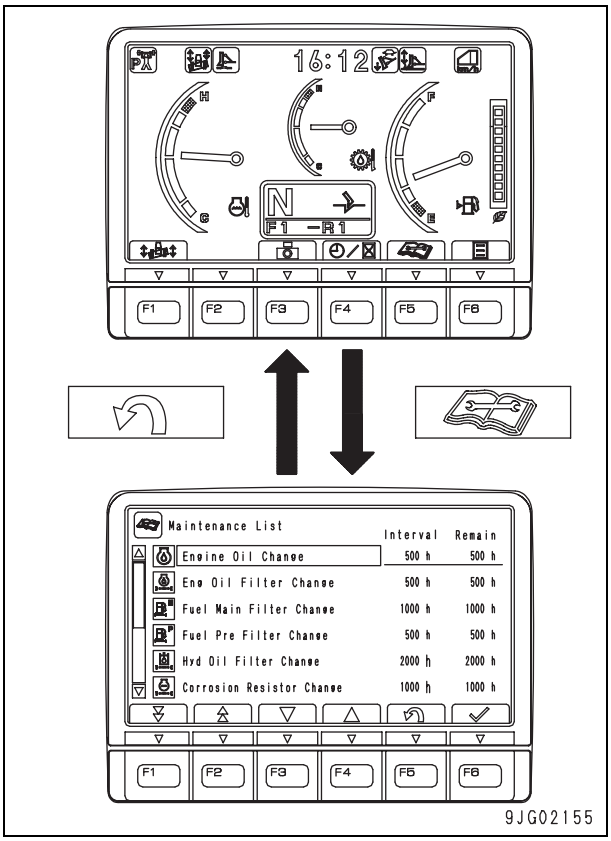

F1 : Displays the next page.
Displays the top page when the last page is displayed.
F2 : Displays the previous page.
Displays the last page when the top page is displayed.
F3 : Selects (highlights) an item one down.
F4 : Selects (highlights) an item one up.
F5 : Returns to the normal screen.
F6 : Switches to the maintenance time reset screen.
No operation at least 30 sec. : Returns to the normal screen.

- If the remaining time on the maintenance table screen is less than 30 hours, the relevant items are highlighted in yellow, and if 0 hours, they are done in red.
- On the maintenance time reset screen, reset the remaining time for the selected item to return to the default.

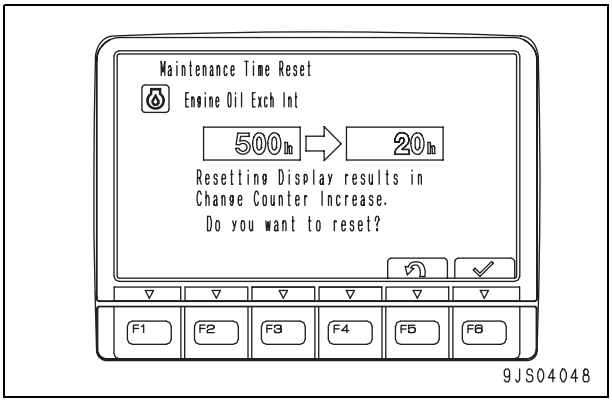

F5 : Cancels the reset to return to the maintenance table screen.
F6 : Resets the remaining time to return to the normal screen.
No operation at least 30 sec. : Returns to the normal screen.

- The table below shows the maintenance items and replacement intervals. The time remaining to maintenance is reduced as the machine is operated.

No.	Item	Replacement interval (Hours)
01	Engine oil	500
02	Engine oil filter	500
03	Fuel main filter	1000
41	Fuel pre filter	500
04	Hydraulic filter	2000
06	Corrosion resistor	1000(*)
07	Damper case oil	2000
08	Final drive case oil	1000
10	Hydraulic oil	2000
19	P/L oil	1000
20	P/L oil filter	500

*: If equipped (To be determined)
P/L: Power train

- The content of the caution display differs according to the remaining time. The relationship is as shown in the table below.

Display	Condition
None	Remaining time for maintenance for all items is more than 30 hours.
Notice display (black symbol displayed on yellow background)	There is one or more items with less than 30-hour remaining time for maintenance.
Warning display (white symbol displayed on red background)	There is one or more items with less than 0-hour remaining time for maintenance.

- You can lock the maintenance time by a password to prevent it from carelessly being reset.

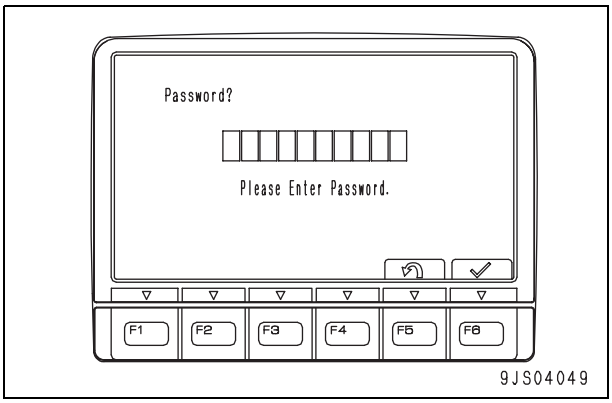

- The default password is “000000”.
- Enabling the password lock on an attachment-equipped machine locks the attachment setting screen at the same time.

★ For information on changing the maintenance password, see “Maintenance password change function” in the Testing and adjusting section.

User mode

- Pressing F6 on the normal screen enters the user mode, switching to the user menu screen.
- In user mode, you can specify items relating to the machine monitor and machine shown below.
  - Utility screen select
  - Multi gauge select
  - Screen adjustment
  - Clock adjustment
  - Language setting
  - Message display
  - Fan reverse mode

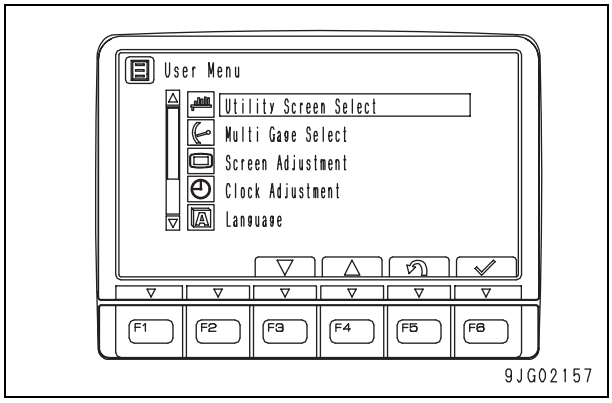

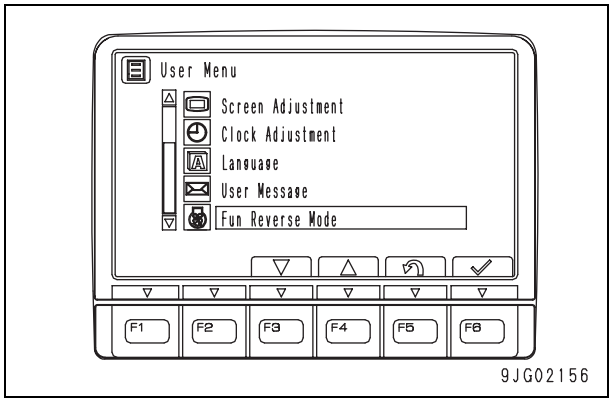

F3 : Selects (highlights) an item one down.
F4 : Selects (highlights) an item one up.
F5 : Returns to the normal screen.
F6 : Switches to the setting screen for the selected item.

No operation at least 30 sec. : Returns to the normal screen.
(In user mode, no switch operation at least 30 sec. returns to the previous screen.)

Utility screen select

- If utility screen select is selected with switch F6, (1) Standard Display, (2) Load Display, or (3) Body Pitch Display can be selected.
- Select an item with switch F3 or F4 and confirm that item with switch F6.

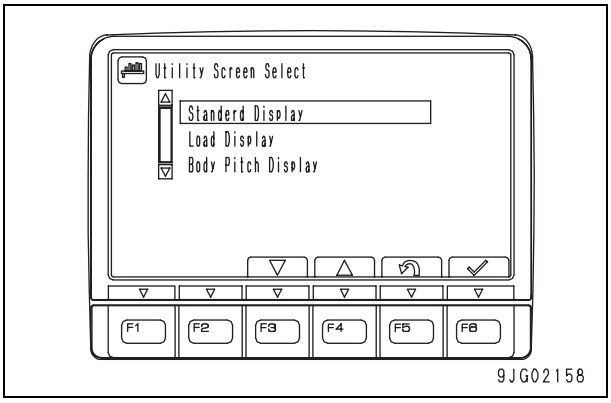

Standard display

- The normal screen is selected.

Load display

- The horizontal axis indicates the time and the vertical axis indicates the traction force. The operation should be carried out in the green range.
- The graph on the screen is updated and scrolled to the left at intervals of several seconds.

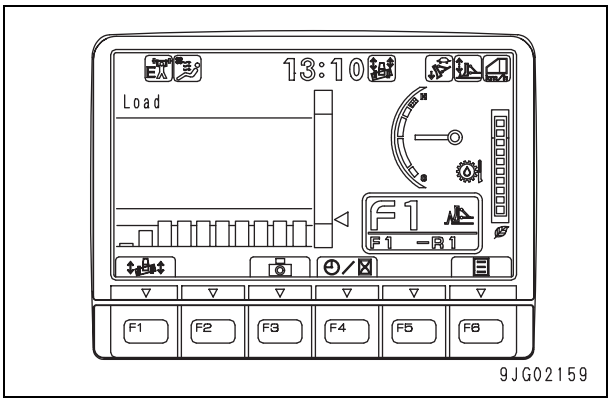

Body Pitch Display

- The horizontal axis indicates the time and the vertical axis indicates the pitch angle of the body.
- The graph on the screen is updated and scrolled to the left at intervals of several seconds.

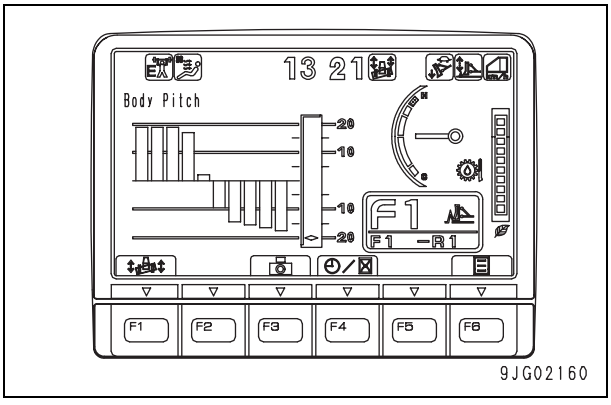

Multi gauge select

- On this screen, the gauges displayed at the center can be selected.
- Select an item with switch F3 or F4 and confirm that item with switch F6.

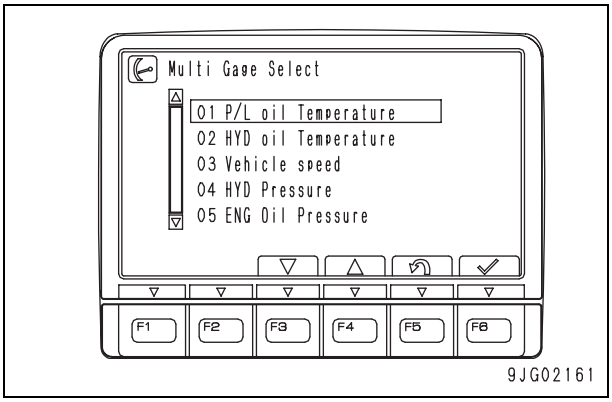

- The following items can be selected.

No.	Selected item	Remarks
1	Power train oil Temperature	With caution
2	HYD oil temperature	With caution
3	Vehicle Speed	—
4	HYD Pressure	—
5	ENG Oil Pressure	With caution
6	Battery Voltage	—
7	Engine Speed	—
8	Traction Force	—
9	Clock	—
10	ENG coolant temperature	For Utility Screen Select
11	Fuel	For Utility Screen Select

Screen adjustment

- Selecting the Screen adjustment from the user menu and pressing F6 switches to the screen adjustment screen.
- From this menu, you can adjust the brightness, contrast, and luminance of the machine monitor screen.
- When the light switch is in Night mode ON, the night mode screen is adjustable.
- When the light switch is in Daytime mode ON or OFF, the daytime mode screen is adjustable.

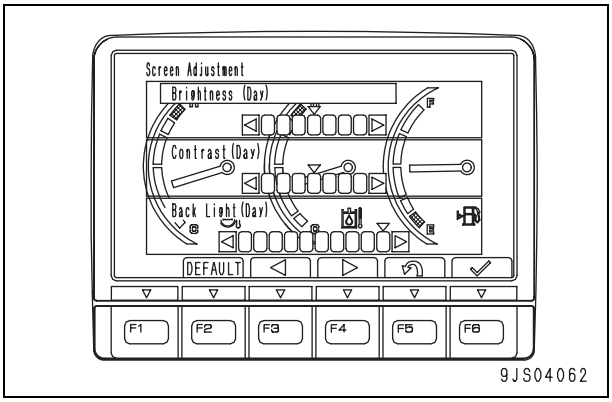

F2 : Returns all adjusted values to the defaults.
F3 : Decreases the value indicated by the indicator one graduation left.
F4 : Increases the value indicated by the indicator one graduation right.
F5 : Cancels changes you made before confirming them with F6 to return to the menu screen.
F6 : Confirms the changes and moves to the next item.

- For a camera-equipped machine, the brightness, contrast, and illuminance of the camera screen are also adjustable.
- For a camera-equipped machine, selecting Screen adjustment from the user menu switches to the screen for selecting a screen you want to adjust.

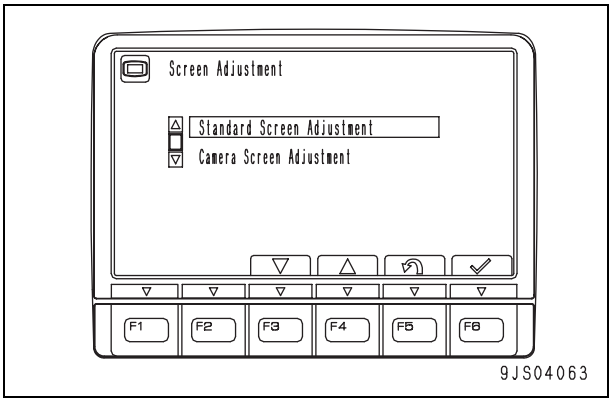

F3 : Selects (highlights) an item one down.
F4 : Selects (highlights) an item one up.
F5 : Cancels changes you made before confirming them with F6 to return to the menu screen.
F6 : Moves to the setup items of the selected (highlighted) item.

- The adjustment methods for the camera screen and normal screen are the same.
- The background when adjusting the camera screen is the No. 1 camera image.

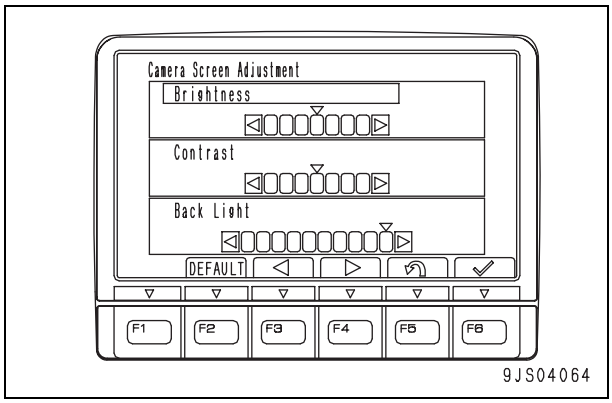

F3 : Selects (highlights) an item one down.
F4 : Selects (highlights) an item one up.
F5 : Cancels changes you made before confirming them with F6 to return to the menu screen.
F6 : Moves to the setup items of the selected (highlighted) item.

Clock adjustment

- Selecting the Clock adjustment from the user menu and pressing F6 switches to the clock adjustment screen.
- On this screen, you can change the setting of the time displayed on the normal screen.

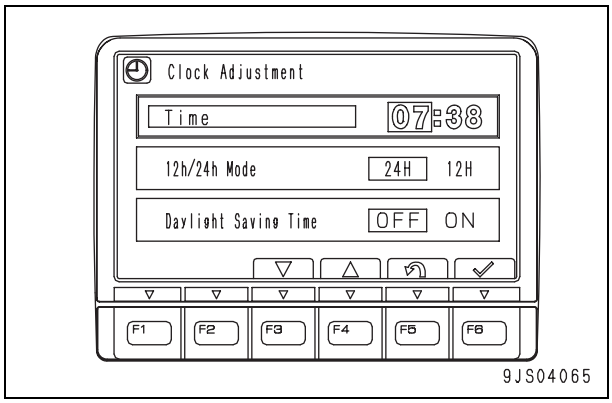

1) Time setting
Set the clock time. If the time setting item is not highlighted, press F6 to highlight it.

The time display part is highlighted.
F3 : Advances the clock one hour.
F4 : Sets the clock back one hour.
F5 : Cancels changes you made before confirming them with F6 to return to the user menu.
F6 : Confirms the changes and moves to minute setting.

The minute display part is highlighted.
F3 : Advances the clock one min.
F4 : Set the clock back one min.
F5 : Cancels changes you made before confirming them with F6 to return to the use menu.
F6 : Confirms the changes and moves to the 12/24 display mode.

2) 12/24 display mode
Specify time display to 12-hour display (AM/PM) or 24-hour display. If the item of 12/24 display mode is not highlighted, press F6 to highlight it.
F3 : Moves to the item one right.
F4 : Moves to the item one left.
F5 : Cancels the changes to return to the user menu.
F6 : Confirms the changes and moves to summer time.

3) Summer time
Selecting ON for this sets the time forward one hour. Setting OFF returns to the ordinary time.
F3 : Moves to the item one right.
F4 : Moves to the item one left.
F5 : Cancels changes you made before confirming them with F6 to return to the user menu screen.
F6 : Confirms the changes and moves to the time setting.

★ Summer time (daylight saving time) is a system to lead a life according to the one-hour advanced time in order to make efficient use of daylight time.

Language setting

- Selecting the Language from the user menu screen and pressing F6 switches to the language setting screen.
- From this menu, you can change the language to be displayed on the monitor. Available languages are as follows.
  English, Japanese, Chinese, French, Spanish, Portuguese, Italian, German, Russian, and Turkish

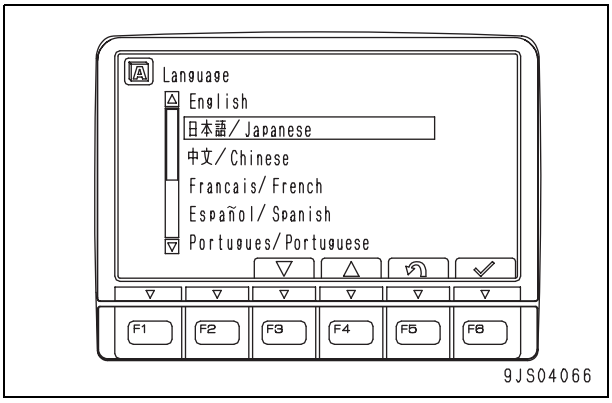

F3 : Selects (highlights) an item one down.
F4 : Selects (highlights) an item one up.
F5 : Cancels the changes to return to the user menu.
F6 : Cancels the changes to return to the user menu.

Message display

- For a KOMTRAX-equipped machine, you can view notification from the sales representative. When there is a message, the message monitor appears on the upper left of the normal screen.
- The lighting green monitor indicates that there are messages to be read.
- The lighting blue monitor appears when you have not sent replies yet after opening messages which accept replies.

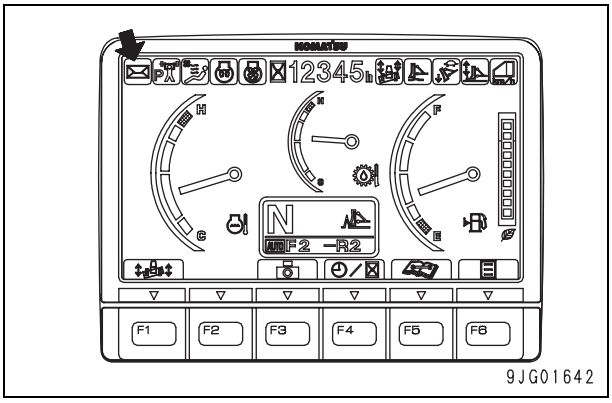

- Press F6 to enter user mode and select “Message display” and you can view (open) the messages.

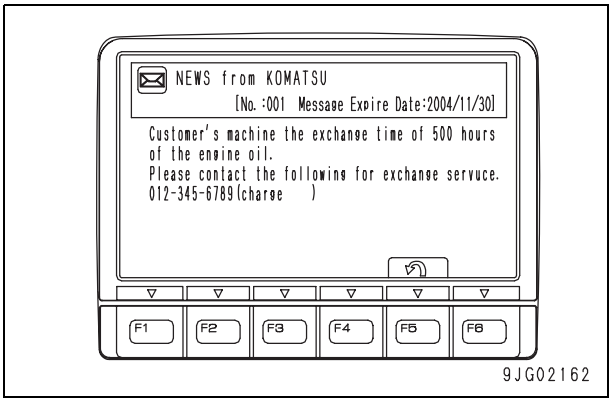

F6 : Returns to the user mode screen.

- Under messages that accept replies, “Value to be entered with 10-key: [ ]” appears.If it appears, enter the selected item number provided in the message using the switches of the machine monitor, and press F6.
- “Do you want to transmit the entered value?” appears under the message. Press F6 and the entered value will be sent.

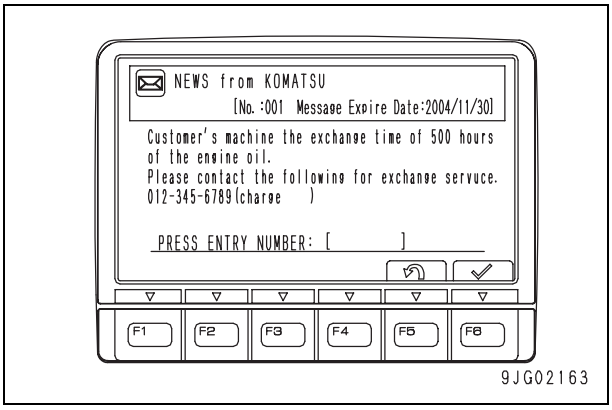

- Messages will be deleted when their validity expire or a new message is received.
- When no message has not been received, “No message” appears at the blue part of the top of the screen.
- Separately from the message display for users above, the service menu is provided with message display for service.

Fan reverse mode

- In this mode, the fan is driven in reverse to clean the radiator core.
- While the starting switch is OFF, select an item with switch F3 or F4 and confirm that item with switch F6.
- While screen (A) is displayed, press switch F6, and the fan is ready to run in reverse.
- While screen (B) is displayed, start the engine.

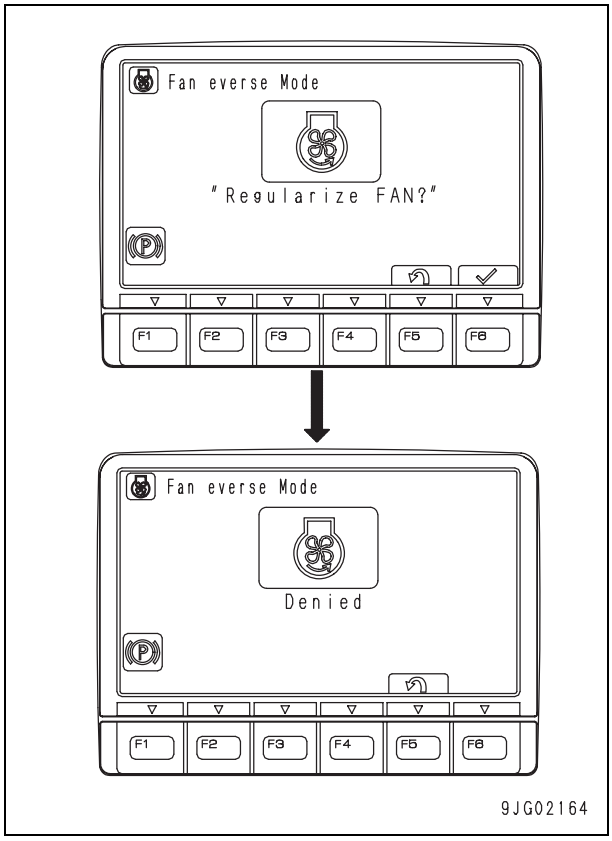

Precautions for using fan reverse mode

- **In this mode, the fan cannot be reversed while the engine is running.**
- **When running the fan in reverse, set the travel lock in the LOCK position.**
- **While the fan is running in reverse, the machine cannot travel.**
- **When resetting the reverse running, turn the starting switch OFF to stop the engine.**
- **When using this mode, warm up the engine sufficiently. If the engine is not warmed up, air may not be supplied sufficiently.**

Service meter check function

- If you continuously pressing auto-deceleration switch (1) and buzzer cancel switch (2) at the same time when setting the starting switch to the OFF position, the service meter will appear on the screen in 3 to 5 sec.

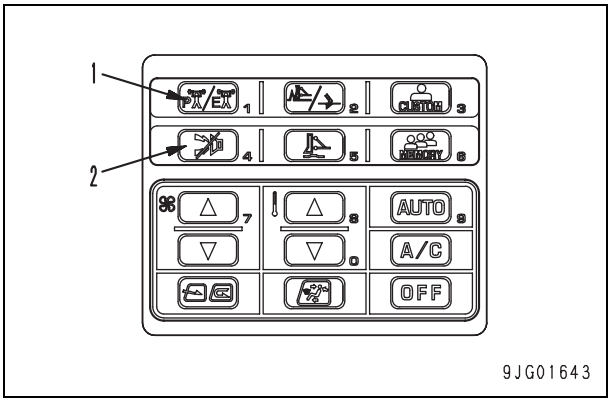

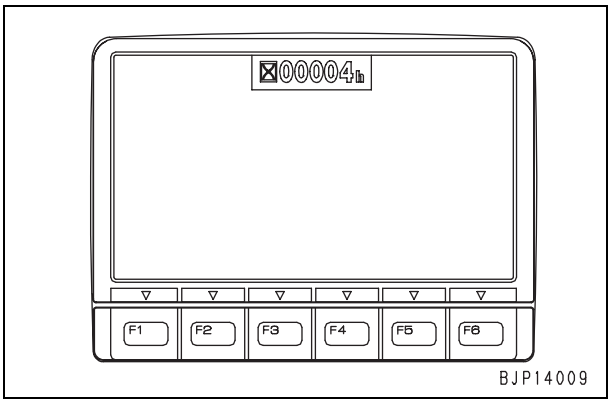

- When these switches are released, the LCD goes out.

★ Continuous operation of the machine monitor may display blue bright spots on this screen; it is quite normal.

Display LCD check function

- Continuously pressing the buzzer cancel switch (1) and F2 at the same time on the password input screen or normal screen causes the entire LCD to light in white. Release F2 and buzzer cancel switch in order. If any part of the display is black, the LCD is broken.

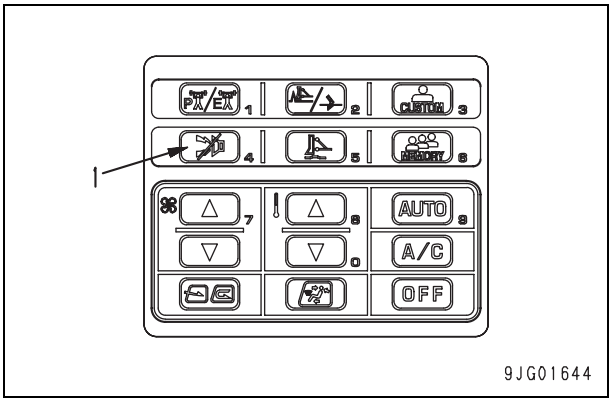

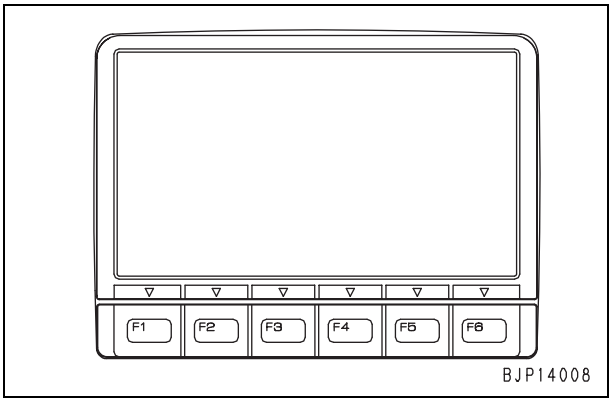

- Pressing any function switch returns to the previous screen.

Sensors

Type of sensor	Sensor method	When normal	When abnormal
Engine oil pressure	Contact	OFF	ON
Engine coolant temperature	Resistance	—	—
Torque converter oil temperature	Resistance	—	—
Hydraulic oil temperature	Resistance	—	—
Coolant level	Contact	ON	OFF
Fuel level	Resistance	—	—

Engine oil pressure sensor

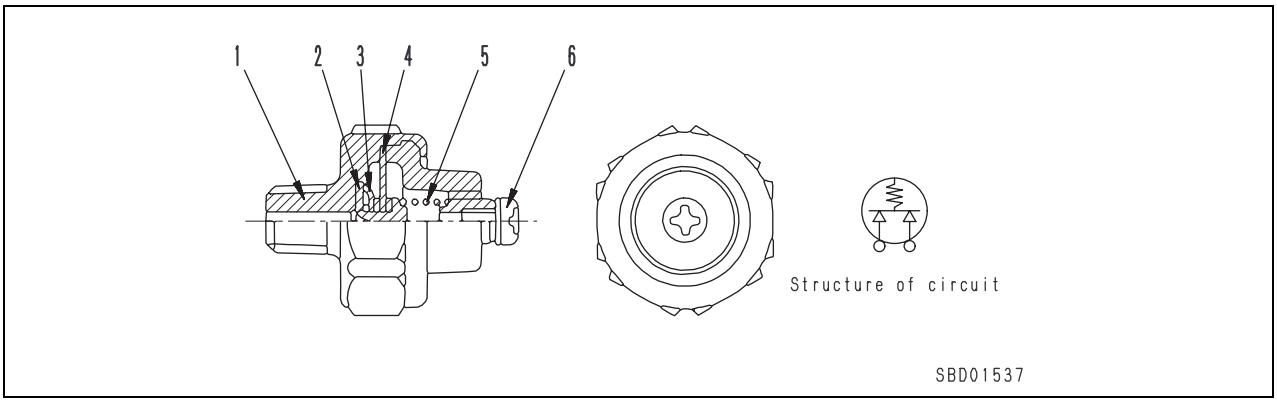

1. Plug
2. Contact ring
3. Contact
4. Diaphragm
5. Spring
6. Terminal

Engine coolant temperature sensor
Torque converter oil temperature sensor
Hydraulic oil temperature sensor

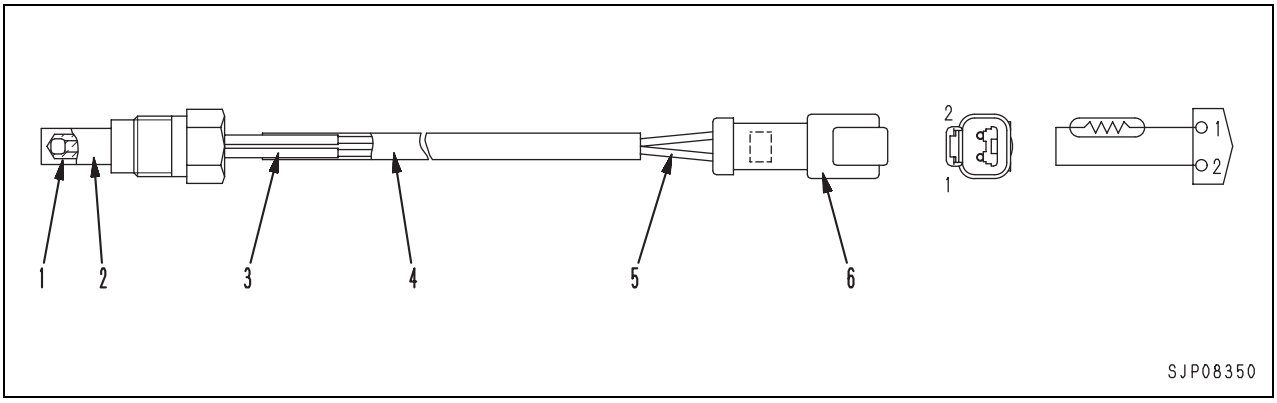

1. Thermistor
2. Body
3. Tube
4. Tube
5. Wire
6. Connector

Coolant level sensor

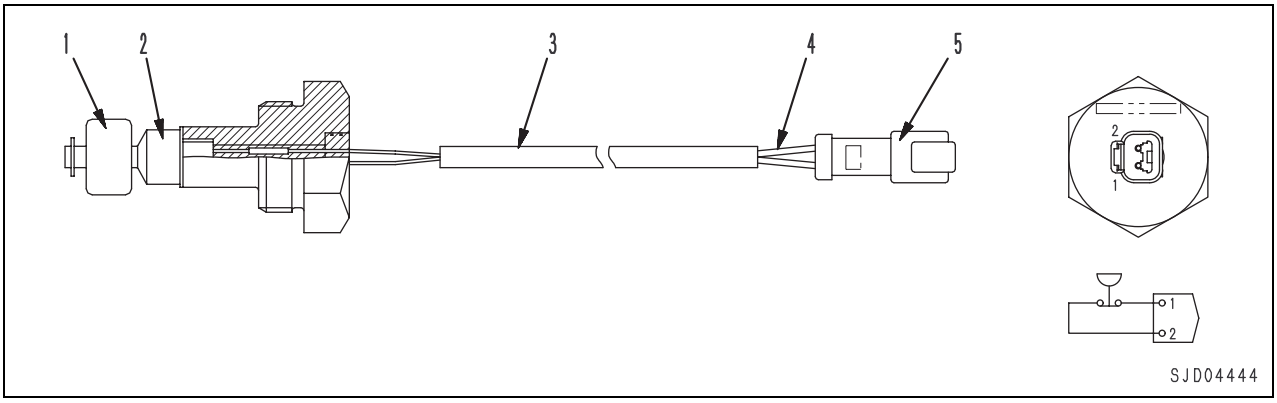

1. Float
2. Sensor
3. Tube
4. Wire
5. Connector

Fuel level sensor

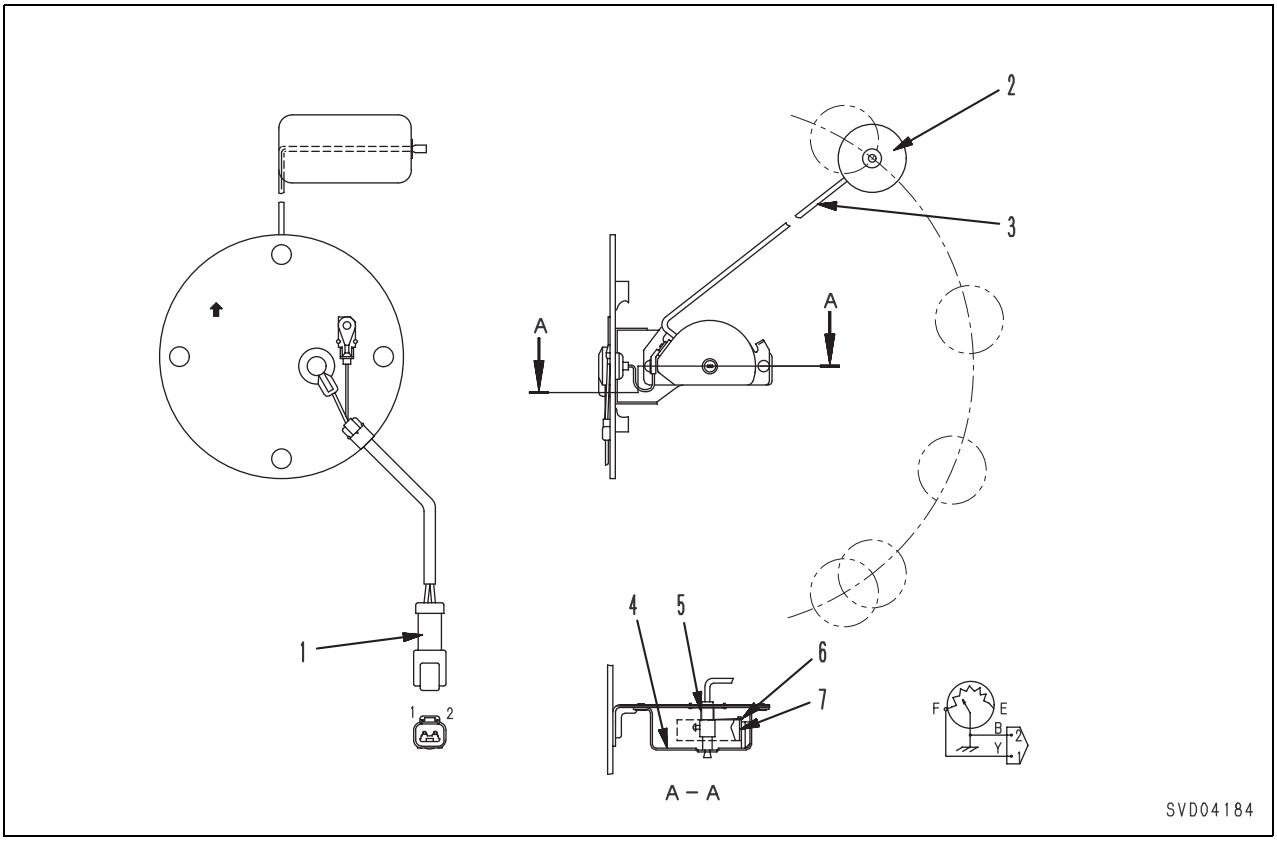

1. Connector
2. Float
3. Arm
4. Body
5. Spring
6. Contact
7. Spacer

Function

- The fuel sensor is installed to the side face of the fuel tank. The float moves up and down according go the fuel level. This movement of the float is transmitted by the arm and actuates a variable resistance. This sends a signal to the monitor panel to indicate the remaining fuel level.

Engine speed sensor
Bevel gear speed sensor

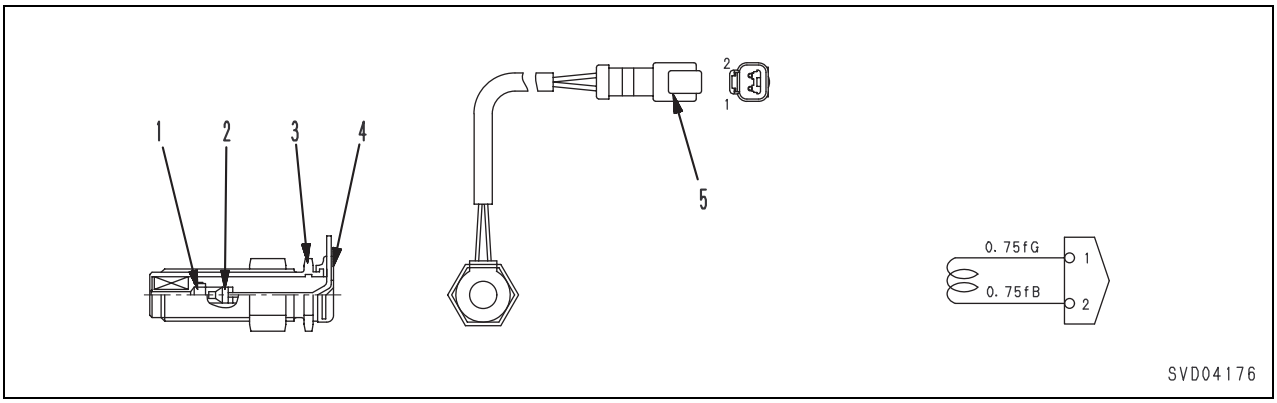

1. Magnet
2. Terminal
3. Case
4. Boots
5. Connector

Pitch angle sensor

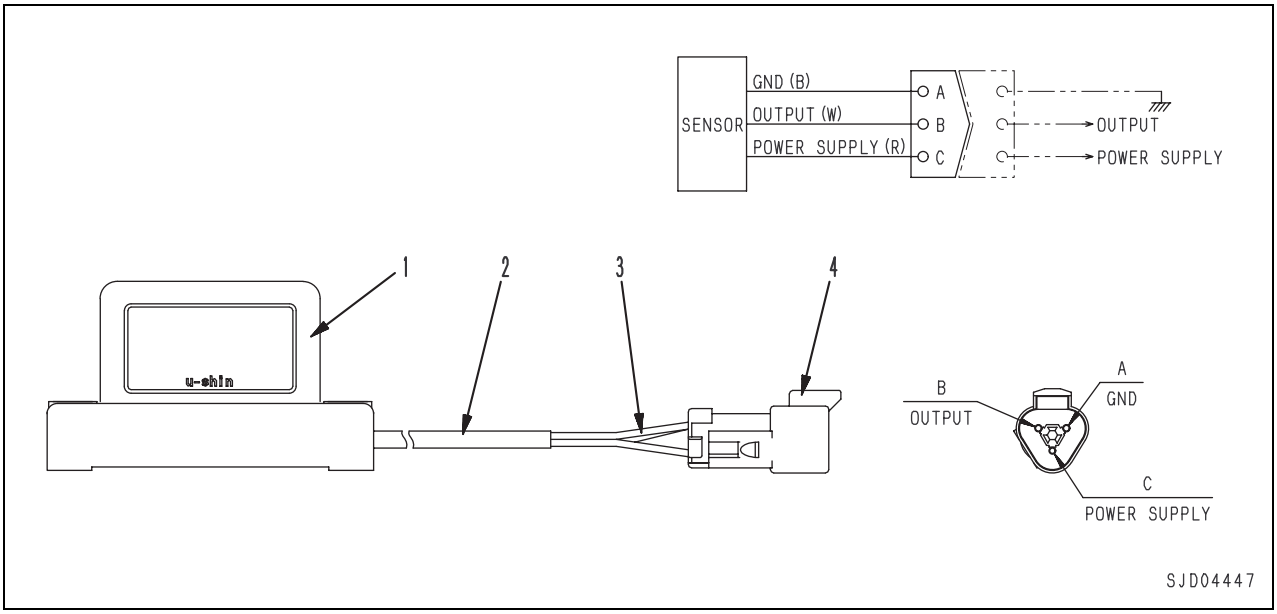

1. Body
2. Tube
3. Wire
4. Connector

Palm command control system

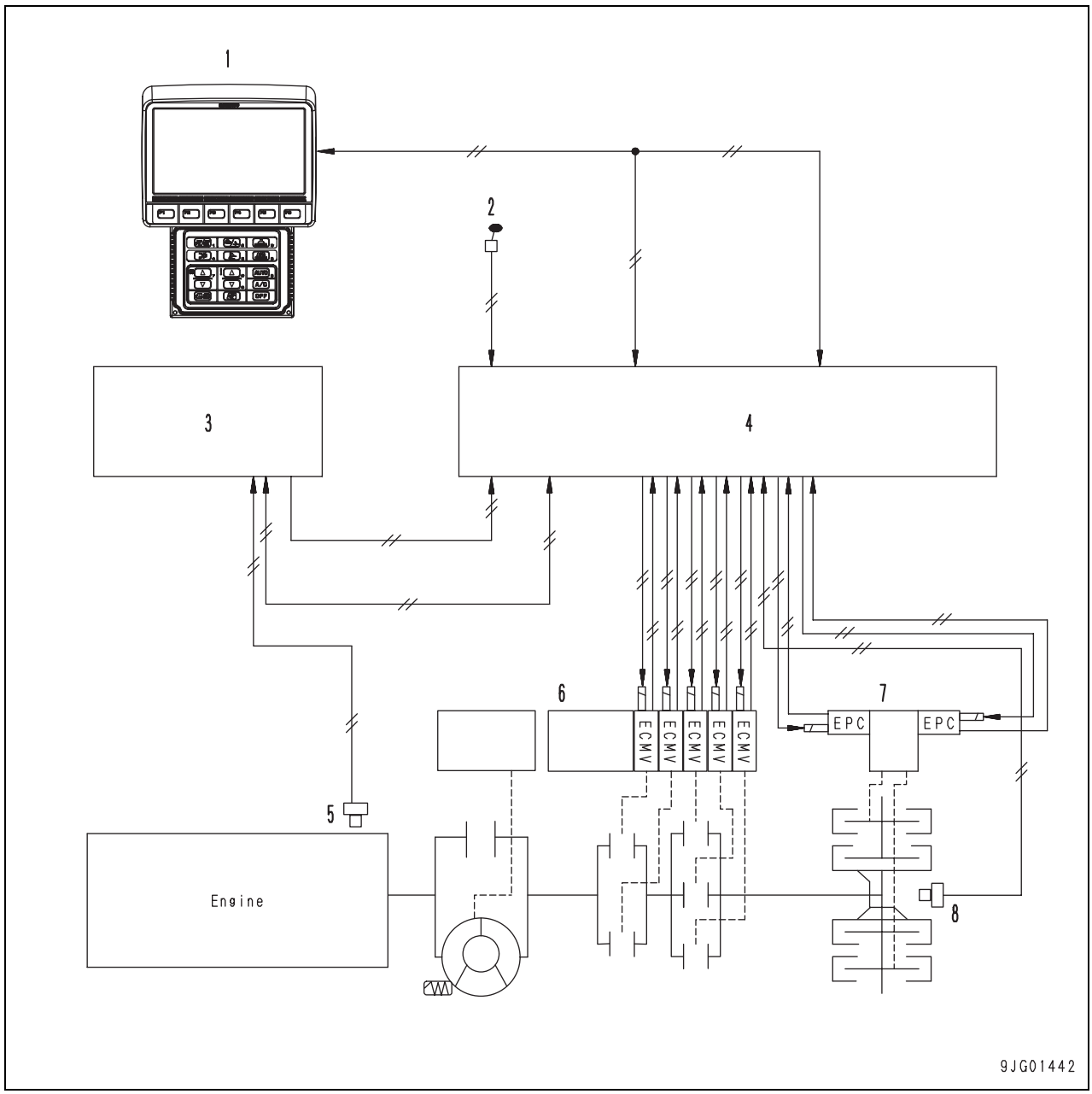

1. Machine monitor (Multi-information)
2. Preset mode switch
3. Engine throttle controller
4. Power train controller
5. Engine speed sensor
6. Transmission control valve
7. Steering control valve
8. Transmission output shaft speed sensor

Gearshift mode function

Outline

There are the auto gearshift mode and manual gearshift mode in the gearshift mode. These modes are changed to each other each time gearshift mode switch (1) is pressed.

1. Auto gearshift mode (Dozing mode)

- If a load is applied, the gear is shifted down automatically. When the load is removed, the gear is shifted up to the set maximum gear speed automatically.
- The torque converter lockup operates according to loads and the maximum gear speed is selected automatically. In this mode, less fuel is consumed and more production is obtained.

2. Manual gearshift mode (Ripping mode)

- If a load is applied, the gear is shifted down automatically. When the load is removed, however, the gear is not shifted up automatically.

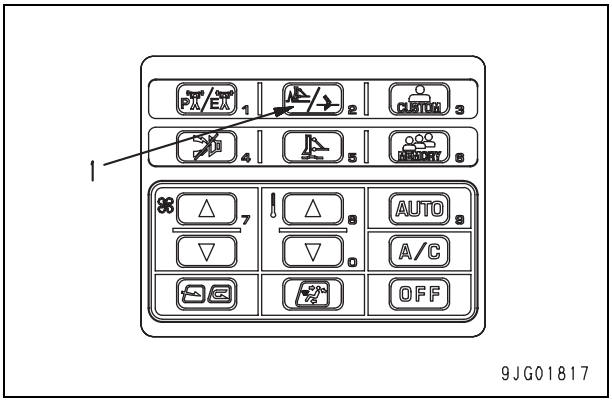

Display of screen

The gearshift mode is displayed in the gearshift mode display section of the monitor panel as shown below.

A: Auto gearshift mode

1. Gear speed used currently
2. Preset (gear speed at start) and maximum gear speed during travel
3. Mark of AUTO (which indicates auto gearshift mode)
4. Mark of Dozing (which indicates auto gearshift mode)

B: Manual gearshift mode

5. Gear speed used currently
6. Preset (gear speed at start)
7. Mark of Ripping (which indicates manual gearshift mode)

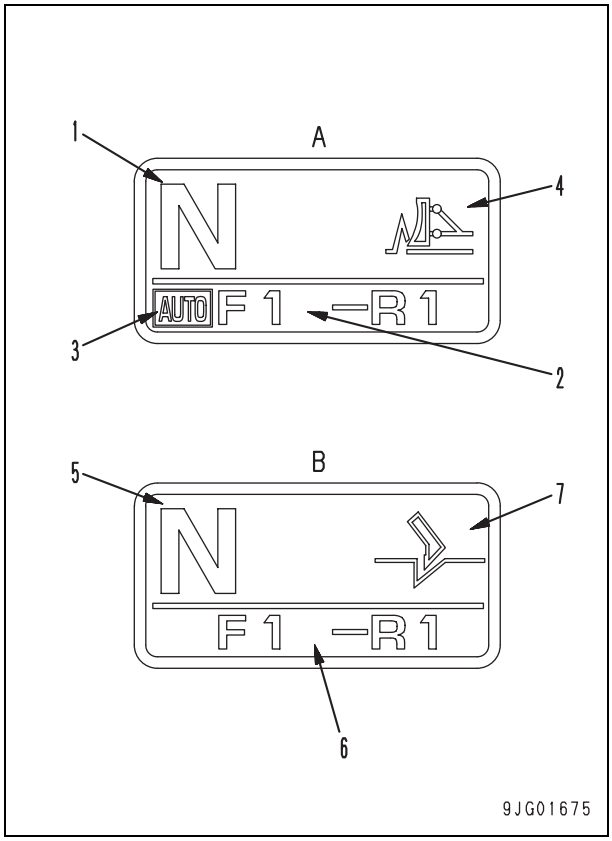

Gear shift operation

- Set a gear by pressing (a) or (b) of the steering/directional/gearshift lever.
  (a) Shift-up switch
  (b) Shift-down switch

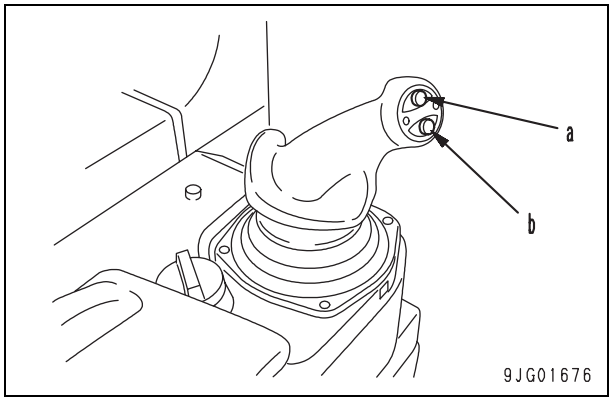

Setting preset with shift switches in neutral

- Set the preset (gear speed at start) and the maximum gear speed during travel (for only the auto gearshift mode) with the gearshift switches in neutral.

A: Auto gearshift mode

2. Setting preset (gear speed at start) and maximum gear speed during travel)

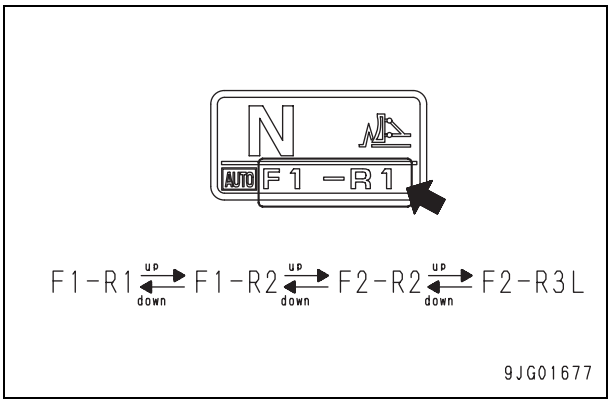

B: Manual gearshift mode

6. Setting preset (gear speed at start)

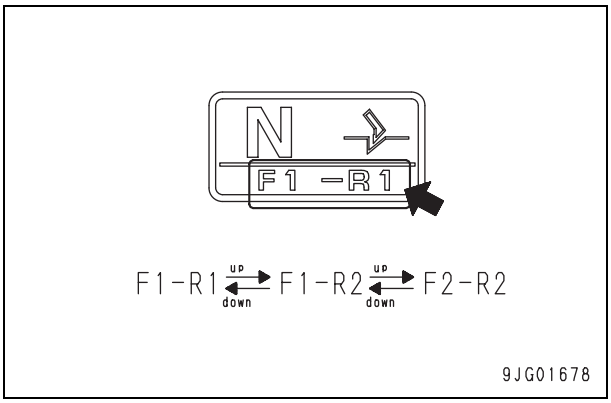

★ When the starting switch is turned ON, the auto gearshift mode ([F1 – R1]) is set. When the gearshift mode is changed, [F1 – R1] is selected initially.

Changing gear speed with gearshift switches during travel

- The maximum gear speed during travel (in the auto gearshift mode) or the gear speed used during travel (in the manual gearshift mode) can be changed with the gearshift switches while the machine is traveling.

A: Auto gearshift mode

2. Changing maximum speed during travel
   During forward travel: The maximum gear speed can be set to F1 – F3.
   During reverse travel: The maximum gear speed can be set to R1 – R3.

   Shift-up switch: Each time this switch is pressed, the maximum gear speed is heightened to the next range.
   Shift-down switch: Each time this switch is pressed, the maximum gear speed is lowered to the next range.

B: Manual gearshift mode

5. Changing maximum speed during travel
   During forward travel: The maximum gear speed can be set to F1 – F3.
   During reverse travel: The maximum gear speed can be set to R1 – R3.

   Shift-up switch: Each time this switch is pressed, the maximum gear speed is heightened to the next range.
   Shift-down switch: Each time this switch is pressed, the maximum gear speed is lowered to the next range.

D155AX-6 Bulldozer

Form No. SEN00610-00

© 2005 KOMATSU
All Rights Reserved
Printed in Japan 12-05 (02)

BULLDOZER

D155AX-6

Machine model	Serial number
D155AX-6	80001 and up

20 Standard value table

Standard service value table

Standard service value table 2
Standard value table for engine 2
Standard value table for machine 3

Standard service value table

Standard value table for engine

Machine model					D155AX-6	
Engine					SAA6D140E-5	
Category	Item	Measurement condition		Unit	Standard value for new machine	Service limit value
Engine	Speed	• Engine coolant temperature: Within operating range	High idle	rpm	2,100 (0/-50)	2,100 (0/-50)
			Low idle	rpm	740 (+20/0)	740 (+20/0)
			Rated speed	rpm	1,900	1,900
	Intake air pressure (Boost pressure)	• Engine coolant temperature: Within operating range • Power train oil temperature: Within operating range • Torque converter: Stalled		kPa {mmHg}	Min. 117 {Min. 880}	100 {750}
	Exhaust temperature	• Whole speed range (Outside temperature: 20°C)		°C	660	700
	Exhaust gas color	• Engine coolant temperature: Within operating range	At sharp acceleration	% (Bosch index)	Max. 25 (Max. 2.5)	35 {3.5}
			High idle	(Bosch index)	Max. 1.0	2.0
	Valve clearance	• Normal temperature	Intake valve	mm	0.35	—
			Exhaust valve	mm	0.57	—
	Compression pressure	• Engine oil temperature: 40 – 60°C	Compression pressure	MPa {kg/cm^2}	Min. 4.1 {Min. 42}	2.8 {29}
			Engine speed	rpm	200 – 250	200 – 250
	Blow-by pressure	• Engine coolant temperature: Within operating range • Power train oil temperature: Within operating range • Torque converter: Stalled		kPa {mmH_2O}	Max. 2.94 {Max. 300}	3.92 {400}
	Engine oil pressure	• SAE0W30EOS, SAE5W40EOS, SAE10W30DH, SAE15W40DH SAE30DH Oil • Engine oil temperature: Min. 80 °C	High idle	MPa {kg/cm^2}	Min. 0.34 {Min. 3.5}	0.21 {2.1}
			Low idle	MPa {kg/cm^2}	Min. 0.10 {Min. 1.0}	0.08 {0.8}
	Oil temperature	• Whole speed range (In oil pan)		°C	90 – 110	120
	Alternator belt tension	• Between water pump pulley – alternator pulley • Deflection under finger pressure of 98 N {10 kg}		mm	13 – 16	13 – 16
	Air compressor belt tension	• Between compressor pulley – fan pulley • Deflection under finger pressure of 59 N {6 kg}		mm	Approx. 10	Approx. 10

Standard value table for machine

Machine model						D155AX-6	
Category	Item		Measurement condition		Unit	Standard value for new machine	Service limit value
Engine speed	Decelerator pedal speed		• Engine coolant temperature: Within operating range • Power train oil temperature: Within operating range • Hydraulic oil temperature: Within operating range • Engine: High idle • Decelerator pedal speed: Press pedal • Auto deceleration speed: Set all levers in neutral		rpm	875 ± 50	875 ± 50
	Auto deceleration speed				rpm	1,875 ± 50	1,875 ± 50
	Torque converter stall speed		• Engine coolant temperature: Within operating range • Power train oil temperature: Within operating range • Hydraulic oil temperature: Within operating range • Engine: High idle • Select P mode • Torque converter stall speed: F3 • Torque converter stall speed + Work equipment relief speed: F3 + Ripper raise		rpm	1,610 ± 50	1,450
	Torque converter stall speed + Work equipment relief speed				rpm	1,550 ± 50	1,395
Cooling fan	Fan motor speed		• Hydraulic oil temperature: Within operating range • Fan: Set in 100% mode • Engine: Low idle	Min. speed	rpm	—	—
			• Hydraulic oil temperature: Within operating range • Fan: Set in 100% mode • Engine: High idle	Max. speed	rpm	1,250 ± 50	1,250 ± 50
	Fan pump circuit pressure		• Hydraulic oil temperature: Within operating range • Fan: Set in 100% mode • Engine: High idle		MPa {kg/cm²}		
Stroke of control lever/pedal	PCCS lever	Forward/ Reverse travel	• Stop engine • Center of lever grip	N → Forward	mm	30 ± 5	30 ± 5
				N → Reverse	mm	30 ± 5	30 ± 5
		Steering		N → Left	mm	40 ± 5	40 ± 5
				N → Right	mm	40 ± 5	40 ± 5
	Decelerator pedal		• Stop engine • Center of pedal		mm	50 ± 10	50 ± 10
	Brake pedal		• Engine: Low idle • Center of pedal	All stroke	mm	79 ± 10	79 ± 10
				Stroke to 0 of oil pressure	mm	54 ± 4	54 ± 4

Machine model						D155AX-6	
Category	Item		Measurement condition		Unit	Standard value for new machine	Service limit value
Stroke of control lever/pedal	Blade control lever		• Stop engine • Center of lever knob	N → Raise	mm	72 ± 10	72 ± 10
				N → Lower	mm	72 ± 10	72 ± 10
				N → Left tilt	mm	53 ± 10	53 ± 10
				N → Right tilt	mm	53 ± 10	53 ± 10
	Ripper control lever		• Stop engine • Center of lever knob	N → Raise	mm	75 ± 10	75 ± 10
				N → Lower	mm	75 ± 10	75 ± 10
				N → In	mm	80 ± 10	80 ± 10
				N → Out	mm	80 ± 10	80 ± 10
Operating effort of control lever/pedal	PCCS lever	Forward/ Reverse travel	• Stop engine • Center of lever grip	N → Forward	N {kg}	56.9 ± 6.9 {5.8 ± 0.7}	56.9 ± 6.9 {5.8 ± 0.7}
				N → Reverse	N {kg}	50.1 ± 6.9 {5.2 ± 0.7}	50.1 ± 6.9 {5.2 ± 0.7}
		Steering		N → Left	N {kg}	24.5 ± 4.9 {2.5 ± 0.5}	24.5 ± 4.9 {2.5 ± 0.5}
				N → Right	N {kg}	27.5 ± 4.9 {2.8 ± 0.5}	27.5 ± 4.9 {2.8 ± 0.5}
	Decelerator pedal		• Stop engine • Center of pedal		N {kg}	49.0 ± 9.8 {5.0 ± 1.0}	49.0 ± 9.8 {5.0 ± 1.0}
	Brake pedal		• Engine: Low idle • Center of pedal		N {kg}	411.6 ± 78.4 {42.0 ± 8.0}	411.6 ± 78.4 {42.0 ± 8.0}
	Blade control lever/ switch		• Stop engine • Center of lever knob • Lower → Float: Switch	N → Raise	N {kg}	39.2 ± 5.9 {4.0 ± 0.6}	39.2 ± 5.9 {4.0 ± 0.6}
				N → Lower	N {kg}	39.2 ± 9.8 {4.0 ± 1.0}	39.2 ± 9.8 {4.0 ± 1.0}
				Lower → Float	N {kg}	9.8 ± 4.9 {1.0 ± 0.5}	9.8 ± 4.9 {1.0 ± 0.5}
				N → Left tilt	N {kg}	29.4 ± 5.9 {3.0 ± 0.6}	29.4 ± 5.9 {3.0 ± 0.6}
				N → Right tilt	N {kg}	29.4 ± 5.9 {3.0 ± 0.6}	29.4 ± 5.9 {3.0 ± 0.6}
	Ripper control lever		• Stop engine • Center of lever knob	N → Raise	N {kg}	19.6 ± 4.9 {2.0 ± 0.5}	19.6 ± 4.9 {2.0 ± 0.5}
				N → Lower	N {kg}	19.6 ± 4.9 {2.0 ± 0.5}	19.6 ± 4.9 {2.0 ± 0.5}
				N → In	N {kg}	24.5 ± 4.9 {2.5 ± 0.5}	24.5 ± 4.9 {2.5 ± 0.5}
				N → Out	N {kg}	24.5 ± 4.9 {2.5 ± 0.5}	24.5 ± 4.9 {2.5 ± 0.5}

Machine model					D155AX-6	
Category	Item	Measurement condition		Unit	Standard value for new machine	Service limit value
Power train oil pressure	Torque converter inlet pressure	• Power train oil temperature: Within operating range • PCCS lever: Neutral • Display by monitoring	Low idle	MPa {kg/cm²}	0.05 – 0.49 {0.5 – 5.0}	0.05 – 0.49 {0.5 – 5.0}
			High idle	MPa {kg/cm²}	Max. 1.0 {Max. 10.0}	Max. 1.0 {Max. 10.0}
	Torque converter outlet pressure		Low idle	MPa {kg/cm²}	0.05 – 0.29 {0.5 – 3.0}	0.05 – 0.29 {0.5 – 3.0}
			High idle	MPa {kg/cm²}	0.29 – 0.69 {3.0 – 7.0}	0.29 – 0.69 {3.0 – 7.0}
	Transmission main relief pressure	• Power train oil temperature: Within operating range • PCCS lever: Neutral (Main relief pressure) (Stator clutch pressure) • Brake pedal: Press (Other than above)	Low idle	MPa {kg/cm²}	2.81 – 3.11 {28.7 – 31.7}	Min. 2.62 {Min. 26.7}
			High idle	MPa {kg/cm²}	3.04 – 3.33 {31.0 – 34.0}	Min. 2.84 {Min. 29.0}
	Torque converter lockup clutch		Low idle	MPa {kg/cm²}	1.32 ± 0.20 {13.5 ± 2.0}	1.32 ± 0.20 {13.5 ± 2.0}
			High idle	MPa {kg/cm²}	1.32 ± 0.20 {13.5 ± 2.0}	1.32 ± 0.20 {13.5 ± 2.0}
	Torque converter stator clutch pressure	• Power train oil temperature: Within operating range • PCCS lever: Neutral (Main relief pressure) (Stator clutch pressure) • Brake pedal: Press (Other than above)	Low idle	MPa {kg/cm²}	2.65 ± 0.20 {27.0 ± 2.0}	2.65 ± 0.20 {27.0 ± 2.0}
			High idle	MPa {kg/cm²}	2.65 ± 0.20 {27.0 ± 2.0}	2.65 ± 0.20 {27.0 ± 2.0}
	Transmission F clutch pressure		Low idle	MPa {kg/cm²}	2.45 – 2.75 {25.0 – 28.0}	Min. 2.26 {Min. 23.0}
			High idle	MPa {kg/cm²}	2.60 – 2.89 {26.5 – 29.5}	Min. 2.40 {Min. 24.5}
	Transmission R clutch pressure		Low idle	MPa {kg/cm²}	2.65 – 2.94 {27.0 – 30.0}	Min. 2.45 {Min. 25.0}
			High idle	MPa {kg/cm²}	2.79 – 3.09 {28.5 – 31.5}	Min. 2.60 {Min. 26.5}
	Transmission 1st clutch pressure		Low idle	MPa {kg/cm²}	2.81 – 3.11 {28.7 – 31.7}	Min. 2.62 {Min. 26.7}
			High idle	MPa {kg/cm²}	3.04 – 3.33 {31.0 – 34.0}	Min. 2.84 {Min. 29.0}
	Transmission 2nd clutch pressure		Low idle	MPa {kg/cm²}	2.60 – 2.89 {26.5 – 29.5}	Min. 2.40 {Min. 24.5}
			High idle	MPa {kg/cm²}	2.75 – 3.04 {28.0 – 31.0}	Min. 2.55 {Min. 26.0}
	Transmission 3rd clutch pressure		Low idle	MPa {kg/cm²}	2.81 – 3.11 {28.7 – 31.7}	Min. 2.62 {Min. 26.7}
			High idle	MPa {kg/cm²}	3.04 – 3.33 {31.0 – 34.0}	Min. 2.84 {Min. 29.0}
	Transmission lubricating oil pressure (Reference)		High idle	MPa {kg/cm²}	0.05 – 0.29 {0.5 – 3.0}	0.05 – 0.29 {0.5 – 3.0}
	Steering right brake pressure	• Power train oil temperature: Within operating range • PCCS lever: Neutral • Brake pedal: Release	Low idle	MPa {kg/cm²}	2.75 ± 0.29 {28.0 ± 3.0}	2.16 {22.0}
			High idle	MPa {kg/cm²}	2.75 ± 0.29 {28.0 ± 3.0}	2.16 {22.0}
	Steering left brake pressure		Low idle	MPa {kg/cm²}	2.75 ± 0.29 {28.0 ± 3.0}	2.16 {22.0}
			High idle	MPa {kg/cm²}	2.75 ± 0.29 {28.0 ± 3.0}	2.16 {22.0}

Machine model						D155AX-6	
Category	Item		Measurement condition		Unit	Standard value for new machine	Service limit value
Power train performance	Travel speed		• Flat ground • Engine coolant temperature: Within operating range • Power train oil temperature: Within operating range • Select manual gearshift mode • Engine: High idle • Approach run: 10 – 30 m • Measuring distance: 20 m (Converted into km/h)	F1	km/h	3.8 ± 0.2	3.8 ± 0.2
				F2	km/h	7.5 ± 0.4	7.5 ± 0.4
				F3L	km/h	7.5 ± 0.4	7.5 ± 0.4
				F3	km/h	11.6 ± 0.6	11.6 ± 0.6
				R1	km/h	4.6 ± 0.2	4.6 ± 0.2
				R2	km/h	6.8 ± 0.4	6.8 ± 0.4
				R3L	km/h	9.2 ± 0.5	9.2 ± 0.5
				R3	km/h	14.0 ± 0.7	14.0 ± 0.7
Work equipment/HSS oil pressure	Unload pressure		• Hydraulic oil temperature: Within operating range • All levers: Set in neutral	Low idle	MPa {kg/cm²}	—	—
				High idle	MPa {kg/cm²}	2.45 (+1.37/0) {25 (+14/0)}	2.45 (+1.37/0) {25 (+14/0)}
	Blade lift relief pressure		• Hydraulic oil temperature: Within operating range • Engine: High idle • Cylinder of measured circuit: Stroke end		MPa {kg/cm²}	27.5 ± 1.5 {280 ± 15}	27.5 ± 1.5 {280 ± 15}
	Blade tilt relief pressure				MPa {kg/cm²}	27.5 ± 1.5 {280 ± 15}	27.5 ± 1.5 {280 ± 15}
	Ripper lift relief pressure				MPa {kg/cm²}	27.5 ± 1.5 {280 ± 15}	27.5 ± 1.5 {280 ± 15}
	Ripper tilt relief pressure				MPa {kg/cm²}	27.5 ± 1.5 {280 ± 15}	27.5 ± 1.5 {280 ± 15}
	Work equipment LS relief pressure				MPa {kg/cm²}	25.0 ± 0.98 {255 ± 10}	25.0 ± 0.98 {255 ± 10}
	HSS relief pressure		• Hydraulic oil temperature: Within operating range • Engine: High idle • Steering of measured circuit: Press brake pedal		MPa {kg/cm²}	38.2 – 41.7 {390 – 425}	38.2 – 41.7 {390 – 425}
	HSS LS relief pressure				MPa {kg/cm²}	36.2 – 38.1 {369 – 389}	36.2 – 38.1 {369 – 389}
	Control circuit basic pressure		• Hydraulic oil temperature: Within operating range • Engine: High idle • All levers: Set in neutral		MPa {kg/cm²}	3.97 (+0.49/0) {40.5 (+5/0)}	3.78 – 4.46 {38.5 – 45.5}
	Control valve EPC valve output pressure (Reference)		• Hydraulic oil temperature: Within operating range • Engine: High idle • Lever of measured circuit: Stroke end		MPa {kg/cm²}	3.82 – 4.12 {39 – 42}	3.53 {36}
Work equipment	Work equipment speed	Blade lift	• Hydraulic oil temperature: Within operating range • Engine: High idle • Select P mode • Apply no load to blade. • Measure time required to move blade from ground level to raise stroke end • For measuring posture, see Fig. 1	Raise	sec	3.0 – 4.0	3.0 – 4.0
				Lower	sec	1.0 – 1.7	1.0 – 1.7

Machine model						D155AX-6	
Category	Item		Measurement condition		Unit	Standard value for new machine	Service limit value
Work equipment	Work equipment speed	Blade tilt	• Hydraulic oil temperature: Within operating range • Engine: High idle • Select P mode • Apply no load to blade • Measure time required to move blade from left tilt end to right tilt end • For measuring posture, see Fig. 2	Left tilt	sec	1.8 – 2.8	3.1
				Right tilt	sec	1.8 – 2.8	3.1
		Ripper lift	• Hydraulic oil temperature: Within operating range • Engine: High idle • Select P mode • Apply no load to ripper (Shank hole: Lowest) • Measure time required to move ripper from ground level to raise end • For measuring posture, see Fig. 3	Raise	sec	2.0 – 3.0	4.0
				Lower	sec	1.5 – 2.5	3.5
		Ripper tilt	• Hydraulic oil temperature: Within operating range • Engine: High idle • Select P mode • Apply no load to ripper • Measure time required to move ripper from tilt in end to tilt back end • For measuring posture, see Fig. 4	Tilt in	sec	4.5 – 5.5	6.2
				Tilt back	sec	3.7 – 4.7	6.1
	Time lag	Blade	• Hydraulic oil temperature: Within operating range • Engine: Low idle • Select P mode. • Blade control lever: Set to stroke end • Lower blade from max. rising position and measure time after blade comes in contact with ground until idler is lifted		sec	Max. 1.7	2.5
		Ripper	• Hydraulic oil temperature: Within operating range • Engine: Low idle • Select P mode • Ripper control lever: Set to stroke end • Lower ripper from max. rising position and measure time after ripper comes in contact with ground until sprocket is lifted		sec	Max. 1.5	1.5

Machine model					D155AX-6	
Category	Item		Measurement condition	Unit	Standard value for new machine	Service limit value
Work equipment	Hydraulic drift of work equipment	Hydraulic drift of lifted blade	• Hydraulic oil temperature: Within operating range • Stop engine • Measure reduction of blade bottom height h in 15 minutes • For measuring posture, see Fig. 5	mm	Max. 50/15 minutes	200/15 minutes
		Hydraulic drift of machine lifted by blade	• Hydraulic oil temperature: Within operating range • Stop engine • Measure reduction of idler center height h in 5 minutes • For measuring posture, see Fig. 6	mm	Max. 50/5 minutes	70/5 minutes
		Hydraulic drift of machine tilted by blade	• Hydraulic oil temperature: Within operating range • Stop engine • Measure reduction of idler center height h in 5 minutes • For measuring posture, see Fig. 7	mm	Max. 50/5 minutes	70/5 minutes
		Hydraulic drift of machine lifted by ripper	• Hydraulic oil temperature: Within operating range • Stop engine • Measure reduction of sprocket center height h in 5 minutes • For measuring posture, see Fig. 8	mm	Max. 50/5 minutes	70/5 minutes
	Leakage from cylinder	Blade lift cylinder	• Hydraulic oil temperature: Within operating range • Engine: High idle • Measure leakage from relieved cylinder in 1 minute	cc/min	Max. 3.0	12
		Ripper lift cylinder		cc/min	Max. 2.7	11
		Ripper tilt cylinder		cc/min	Max. 2.7	11

Postures and procedures for measuring performance

Fig. 1: Blade lift speed

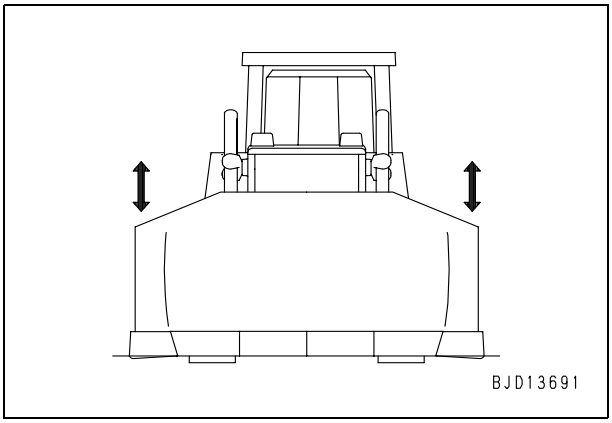

Fig. 2: Blade tilt speed

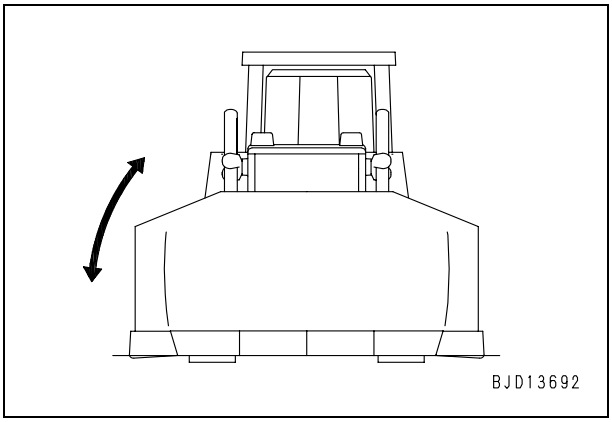

Fig. 3: Ripper lift speed

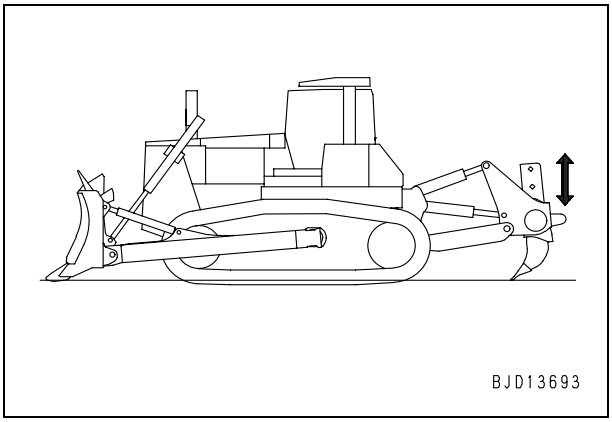

Fig. 4: Ripper tilt speed

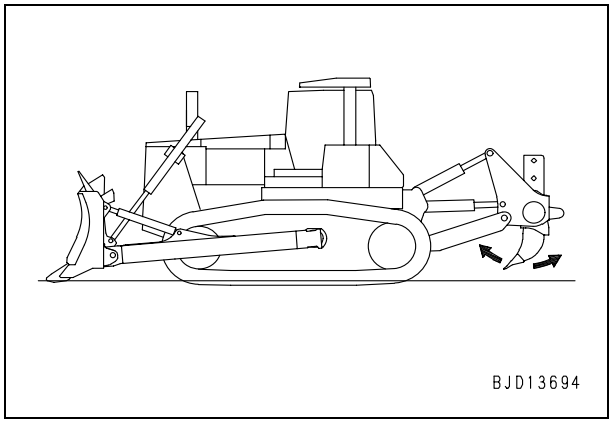

Fig. 5: Hydraulic drift of lifted blade

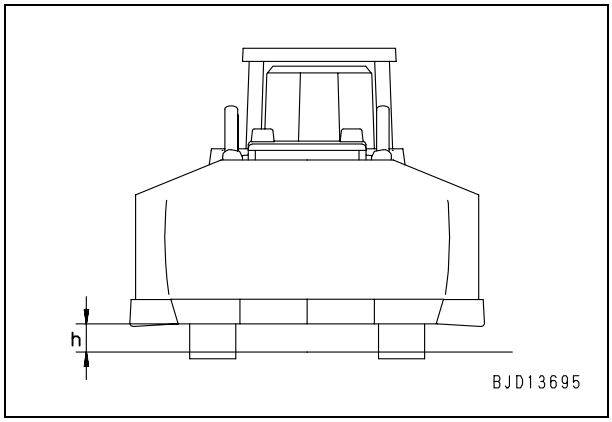

Fig. 6: Hydraulic drift of machine lifted by blade

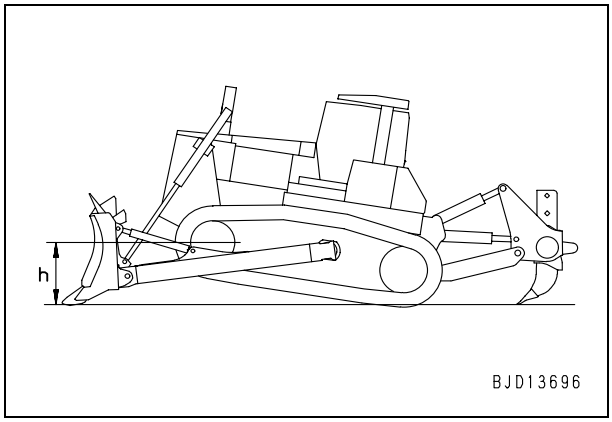

Fig. 7: Hydraulic drift of machine tilted by blade

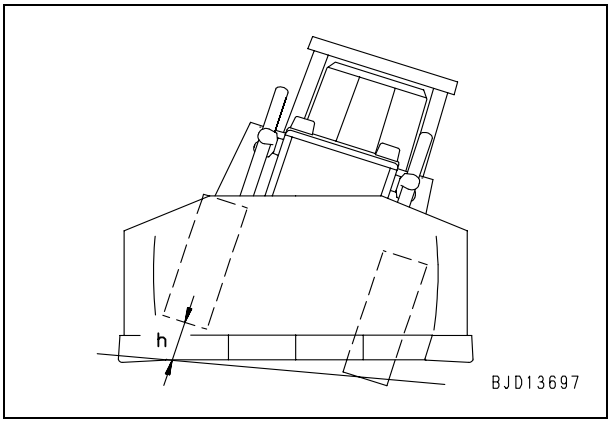

Fig. 8: Hydraulic drift of machine lifted by ripper

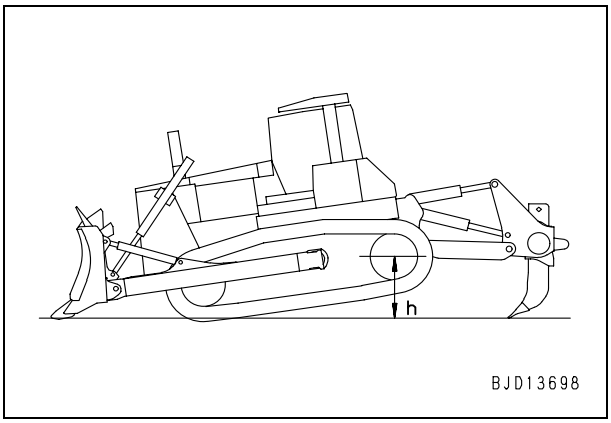

D155AX-6 Bulldozer
Form No. SEN00678-01

© 2006 KOMATSU
All Rights Reserved
Printed in Japan 05-06 (02)

BULLDOZER

D155AX-6

Machine model	Serial number
D155AX-6	80001 and up

30 Testing and adjusting

Testing and adjusting, Part 1

Testing and adjusting, Part 1 3
Tools for testing, adjusting, and troubleshooting 3
Measuring engine speed 5
Measuring intake air pressure (boost pressure) 7
Measuring exhaust temperature 8
Measuring exhaust gas color 10
Adjusting valve clearance 11
Measuring compression pressure 12
Measuring blow-by pressure 14
Measuring engine oil pressure 15
Handling fuel system parts 16
Releasing residual pressure from fuel system 16
Measuring fuel pressure 17
Measuring fuel return rate and fuel leakage 18
Bleeding air from fuel circuit 22
Measuring fuel circuit for leakage 24

Testing and adjusting alternator belt tension 25
Testing and adjusting air conditioner compressor belt tension 26
Measuring fan speed 27
Measuring fan circuit oil pressure 28
Bleeding air from fan pump 29
Adjusting fuel control dial and decelerator pedal 30

Testing and adjusting, Part 1

Tools for testing, adjusting, and troubleshooting

Testing and adjusting item	Symbol		Part No.	Part name	Q'ty	Remarks
Measuring intake air pressure (boost pressure)	A		799-201-2202	Boost gauge kit	1	– 101 – 200 kPa {– 760 – 1,500 mmHg}
			799-401-2220	Hose	1	Straight type quick coupler
Measuring exhaust temperature	B		799-101-1502	Digital thermometer	1	– 99.9 – 1,299°C
Measuring exhaust gas color	C	1	799-201-9001	Handy smoke checker	1	Bosch index: 0 – 9
		2	Commercially available	Smoke meter	1	
Adjusting valve clearance	D		Commercially available	Thickness gauge	1	Air intake: 0.35 mm, Exhaust: 0.57 mm
Measuring compression pressure	E	1	795-502-1590	Compression gauge	1	0 – 6.9 MPa {0 – 70 kg/cm^2}
		2	795-471-1330	Adapter	1	For 140E-5 engine
			6261-71-6150	Gasket	1	
Measuring blow-by pressure	F		799-201-1504	Blow-by checker	1	0 – 5 kPa {0 – 500 mmH_2O}
Measuring engine oil pressure	G	1	799-101-5002	Hydraulic tester	1	Pressure gauge: 2.5, 5.9, 39.2, 58.8 MPa {25, 60, 400, 600 kg/cm^2}
			790-261-1204	Digital hydraulic tester	1	Pressure gauge: 58.8 MPa {600 kg/cm^2}
		2	799-401-2320	Hydraulic tester	1	Pressure gauge: 0.98 MPa {10 kg/cm^2}
Measuring fuel pressure	H	1	799-101-5002	Hydraulic tester	1	Pressure gauge: 2.5, 5.9, 39.2, 58.8 MPa {25, 60, 400, 600 kg/cm^2}
			790-261-1204	Digital hydraulic tester	1	Pressure gauge: 58.8 MPa {600 kg/cm^2}
		2	799-401-2320	Hydraulic tester	1	Pressure gauge: 0.98 MPa {10 kg/cm^2}
		3	795-471-1450	Adapter	1	8 × 1.25 mm → R1/8
			07005-00812	Gasket	1	
Measuring fuel return rate and fuel leakage	J	1	6151-51-8490	Spacer	1	Inside diameter: 14 mm
		2	6206-71-1770	Joint	1	Inside diameter of joint: 10 mm
		3	Commercially available	Hose	1	ø5 mm × 2 – 3 m
		4	Commercially available	Hose	1	ø15 mm × 2 – 3 m
		5	Commercially available	Measuring cylinder	1	
		6	Commercially available	Stopwatch	1	
Measuring fan speed	K		795-205-1100	Tachometer kit	1	6.0 – 99999.9 rpm
Measuring fan circuit pressure	L	1	799-101-5002	Hydraulic tester	1	Pressure gauge: 2.5, 5.9, 39.2, 58.8 MPa {25, 60, 400, 600 kg/cm^2}
			790-261-1204	Digital hydraulic tester	1	Pressure gauge: 58.8 MPa {600 kg/cm^2}
		2	799-401-3400	Adapter	1	Size: 05
		3	799-101-5220	Nipple	1	Size: 10 × 1.25 mm
			07002-11023	O-ring		

Testing and adjusting item	Symbol		Part No.	Part name	Q'ty	Remarks
Measuring power train oil pressure	M		799-101-5002	Hydraulic tester	1	Pressure gauge: 2.5, 5.9, 39.2, 58.8 MPa {25, 60, 400, 600 kg/cm^2}
			790-261-1204	Digital hydraulic tester	1	Pressure gauge: 58.8 MPa {600 kg/cm^2}
Adjusting brake pedal	N		79A-264-0091	Push-pull scale	1	0 – 490 N {0 – 50 kg}
Emergency escape method when power train has trouble	P	1	19M-06-32820	Switch assembly	1	
			17A-06-41410	Wiring harness	1	
		2	790-190-1601	Pump assembly	1	
Measuring and adjusting work equipment and HSS oil pressure	Q	1	799-101-5002	Hydraulic tester	1	Pressure gauge: 2.5, 5.9, 39.2, 58.8 MPa {25, 60, 400, 600 kg/cm^2}
			790-261-1204	Digital hydraulic tester	1	Pressure gauge: 58.8 MPa {600 kg/cm^2}
		2	799-101-5220	Nipple	2	Size: 10 × 1.25 mm
			07002-11023	O-ring	2	
Measuring control circuit basic pressure	R	1	799-101-5002	Hydraulic tester	1	Pressure gauge: 2.5, 5.9, 39.2, 58.8 MPa {25, 60, 400, 600 kg/cm^2}
			790-261-1204	Digital hydraulic tester	1	Pressure gauge: 58.8 MPa {600 kg/cm^2}
		2	799-401-3200	Adapter	1	Size: 03
Testing work equipment lock solenoid valve output pressure	S	1	799-101-5002	Hydraulic tester	1	Pressure gauge: 2.5, 5.9, 39.2, 58.8 MPa {25, 60, 400, 600 kg/cm^2}
			790-261-1204	Digital hydraulic tester	1	Pressure gauge: 58.8 MPa {600 kg/cm^2}
		2	799-401-3200	Adapter	1	Size: 03
Emergency operation when work equipment has trouble	T		17A-06-41421	Wiring harness	1	
Measuring ripper pin puller solenoid valve output pressure	U	1	799-101-5002	Hydraulic tester	1	Pressure gauge: 2.5, 5.9, 39.2, 58.8 MPa {25, 60, 400, 600 kg/cm^2}
			790-261-1204	Digital hydraulic tester	1	Pressure gauge: 58.8 MPa {600 kg/cm^2}
		2	799-401-3200	Adapter	1	Size: 03
Measuring internal leakage of work equipment cylinder	V		Commercially available	Measuring cylinder	1	
Measuring coolant temperature and oil temperature	—		799-101-1502	Digital thermometer	1	– 99.9 – 1,299°C
Testing operating effort and pressing force	—		79A-264-0021	Push-pull scale	1	0 – 294 N {0 – 30 kg}
			79A-264-0091	Push-pull scale	1	0 – 490 N {0 – 50 kg}
Measuring stroke and hydraulic drift	—		Commercially available	Ruler	1	
Measuring work equipment speed	—		Commercially available	Stopwatch	1	
Measuring voltage and resistance	—		Commercially available	Circuit tester	1	

★ For the model names and part Nos. of the T-boxes and T-adapters used for troubleshooting for the machine monitor, controllers, sensors, actuators, electrical equipment, and wiring harnesses, see Troubleshooting (Information related to troubleshooting), List of T-boxes and T-adapters.

Measuring engine speed

⚠ **Stop the machine on level ground, lower the work equipment to the ground, stop the engine, and set the parking brake lever and work equipment lock lever in the lock position.**

★ Measure the engine speed under the following conditions.
- Engine coolant temperature: Within operating range
- Power train oil temperature: Within operating range
- Hydraulic oil temperature: Within operating range
- Working mode: P mode
- Gearshift mode: Either Auto or Manual

1. Preparation work

Measure the engine speed with the Adjustment function in the service mode of the machine monitor.

★ For the operating method of the machine monitor, see Special functions of machine monitor (EMMS).

1) Measuring low idle speed, decelerator pedal speed, auto-deceleration speed, torque converter stall speed, and torque converter stall speed + work equipment relief speed (full stall speed):
   - Adjustment code: **0530** (Stall mode)
   - ★ When stalling the torque converter for a purpose other than measuring the engine speed, be sure to use this adjustment code, too.

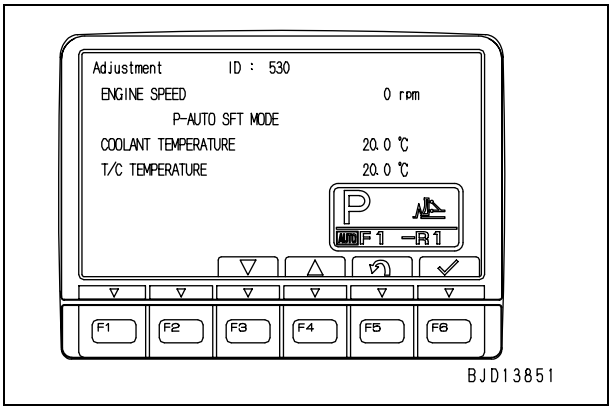

2) Measuring high idle speed:
   - Adjustment code: **0007** (Reset engine deceleration)
   - ★ Only when this code is selected, the engine can be operated and tested with the auto-decelerator reset.

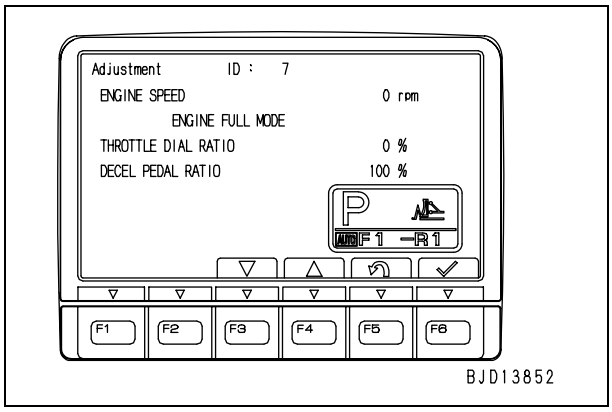

2. Measuring low idle speed

1) Start the engine and set the fuel control dial in the low idle (MIN) position.
2) Set the PCCS lever, blade control lever, and ripper control lever in neutral and measure the engine speed.
   - ★ The parking brake lever and work equipment lock lever may be kept in the LOCK position.

3. Measuring high idle speed

1) Start the engine and set the fuel control dial in the high idle (MAX) position.
2) Set the PCCS lever, blade control lever, and ripper control lever in neutral and measure the engine speed.
   - ★ The parking brake lever and work equipment lock lever may be kept in the LOCK position.
   - ★ When measuring the high idle speed, be sure to select adjustment code [**0007**] (If adjustment code [**0530**] is selected, the auto-deceleration speed is measured).

4. Measuring decelerator pedal speed

1) Start the engine and set the fuel control dial in the high idle (MAX) position.
2) Set the PCCS lever, blade control lever, and ripper control lever in neutral, press the decelerator pedal to the stroke end, and measure the engine speed.
   - ★ The parking brake lever and work equipment lock lever may be kept in the LOCK position.

5. Measuring auto-deceleration speed

1) Start the engine and set the fuel control dial in the high idle (MAX) position.
2) Set the PCCS lever, blade control lever, and ripper control lever in neutral and measure the engine speed.

★ The parking brake lever and work equipment lock lever may be kept in the LOCK position.

6. Measuring torque converter stall speed

1) Start the engine and set the fuel control dial in the low idle (MIN) position.
2) Operate the shiftup (UP) switch of the PCCS lever and set the preset mode display section to [F3-R3].
   ★ The preset mode display section (at the right bottom of the screen) can be set to [F3-R3] only while the Adjustment function is selected.
3) While pressing the brake pedal securely, set the parking brake lever in the free position and set the direction of PCCS lever in the forward position.
   ★ Before going to the next step, check that [F3] is displayed in the gear speed display section (at the right bottom of the screen).
   ★ Keep the steering system in neutral.
4) Press the decelerator pedal and set the fuel control dial in the high idle (MAX) position.
5) Return the decelerator pedal slowly to stall the torque converter with the engine at high idle.

⚠ **Keep pressing the brake pedal securely and keep your right foot on the decelerator pedal for safety until the work is finished.**

6) Just after the power train oil temperature gauge (T/C TEMPERATURE) indicates 118 – 120 °C, return the direction of PCCS lever to neutral.
   ★ The top of the green range of the power train oil temperature gauge indicates about 118 – 120 °C.
7) Repeat above steps 3) – 6) 3 times.
8) Perform steps 3) – 5) again and measure the engine speed about 5 seconds after the power train oil temperature gauge (T/C TEMPERATURE) indicates 118 – 120 °C.
   ★ Immediately after finishing measurement, return the direction of PCCS lever to neutral and lower the power train oil temperature with the engine at high idle.

7. Measuring torque converter stall + work equipment relief speed (Full stall speed)

1) Start the engine and set the fuel control dial in the low idle (MIN) position.
2) Operate the shiftup (UP) switch of the PCCS lever and set the preset mode display section to [F3-R3].
   ★ The preset mode display section (at the right bottom of the screen) can be set to [F3-R3] only while the Adjustment function is selected.
3) Set the work equipment lock lever in the free position and operate the ripper control lever to set the ripper lift cylinder to the raise stroke end.
4) While pressing the brake pedal securely, set the parking brake lever in the free position and set the direction of PCCS lever in the forward position.
   ★ Before going to the next step, check that [F3] is displayed in the gear speed display section (at the right bottom of the screen).
   ★ Keep the steering system in neutral.
5) Press the decelerator pedal and set the fuel control dial in the high idle (MAX) position.
6) Return the decelerator pedal slowly to stall the torque converter with the engine at high idle.

⚠ **Keep pressing the brake pedal securely and keep your right foot on the decelerator pedal for safety until the work is finished.**

7) Just after the power train oil temperature gauge (T/C TEMPERATURE) indicates 118 – 120 °C, return the direction of PCCS lever to neutral.
   ★ The top of the green range of the power train oil temperature gauge indicates about 118 – 120 °C.
8) Repeat above steps 4) – 7) 3 times.
9) Perform steps 4) – 6) again, operate the ripper control lever to relieve the ripper raise system, and measure the engine speed about 5 seconds after the power train oil temperature gauge (T/C TEMPERATURE) indicates 118 – 120 °C.
   ★ Immediately after finishing measurement, return the direction of PCCS lever to neutral and lower the power train oil temperature with the engine at high idle.

Measuring intake air pressure (boost pressure)

★ Measuring instruments for intake air pressure (boost pressure)

Symbol	Part No.	Part name
A	799-201-2202	Boost gauge kit
	799-401-2220	Hose

⚠ **Stop the machine on level ground, lower the work equipment to the ground, stop the engine, and set the parking brake lever and work equipment lock lever in the lock position.**

⚠ **Be careful not to touch any hot part of the engine when removing or installing the measuring tools.**

★ Measure the intake air pressure (boost pressure) under the following conditions.
- Engine coolant temperature: Within operating range
- Power train oil temperature: Within operating range
- Hydraulic oil temperature: Within operating range

1. Open the engine left side cover.
2. Remove intake air pressure pickup plug (1) from the rear of the air intake connector.

3. Install nipple [1] of boost gauge kit **A** and connect gauge [2].

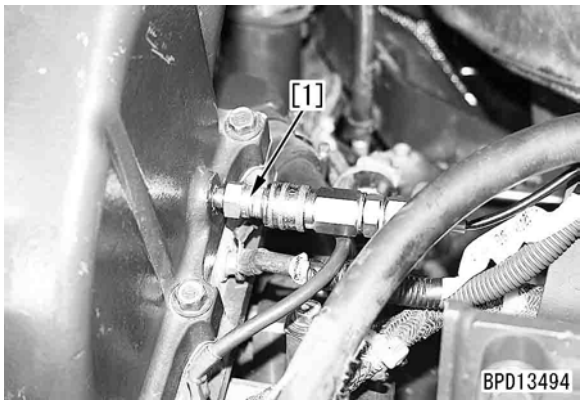

4. Run the engine at a medium or higher speed and drain the oil from the test hose.
   ★ Insert the connecting parts of the gauge and hose about a half and open the self-seal on the hose side repeatedly, and the oil will be drained.
   ★ If Pm kit (A) is available, you may drain the oil by using the oil draining coupling (790-261-1130) in that kit.
   ★ If oil is left in the hose, the gauge does not work. Accordingly, be sure to drain the oil.
5. Turn the starting switch ON and set the machine monitor to Adjustment function of the service mode.
   - Adjustment code: **0530** (Stall mode)
   ★ For the operating method, see Special functions of machine monitor (EMMS).

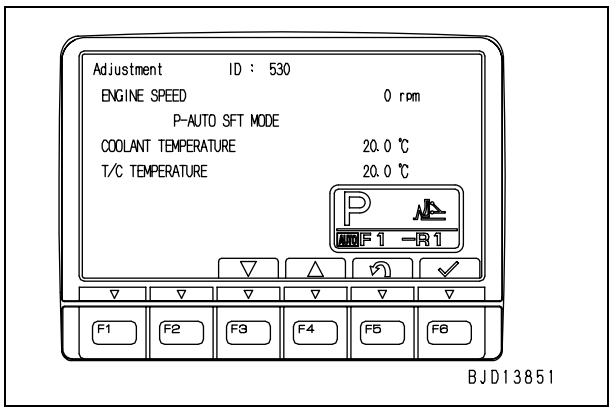

6. While running the engine at high idle, stall the torque converter and measure the intake air pressure (boost pressure).
   ★ For the procedure for stalling the torque converter, see Measuring engine speed.
   ★ Normally, the intake air pressure (boost pressure) should be measured while the engine is operated at the rated output. In the field, however, an approximate value can be obtained by stalling the torque converter.

7. After finishing measurement, remove the measuring instruments and return the removed parts.

Measuring exhaust temperature

★ Measuring instruments for exhaust temperature

Symbol	Part No.	Part name
B	799-101-1502	Digital thermometer

⚠ **Stop the machine on level ground, lower the work equipment to the ground, stop the engine, and set the parking brake lever and work equipment lock lever in the lock position.**

⚠ **Install and remove the measuring instruments after the exhaust manifold is cooled.**

★ Measure the exhaust temperature under the following conditions.
- Engine coolant temperature: Within operating range
- Power train oil temperature: Within operating range
- Hydraulic oil temperature: Within operating range

1. Open the engine right side cover and right mudguard.

2. Remove 1 exhaust temperature pickup plug (1) from the exhaust manifold.
   ★ You may measure the exhaust temperature at either front or rear plug.

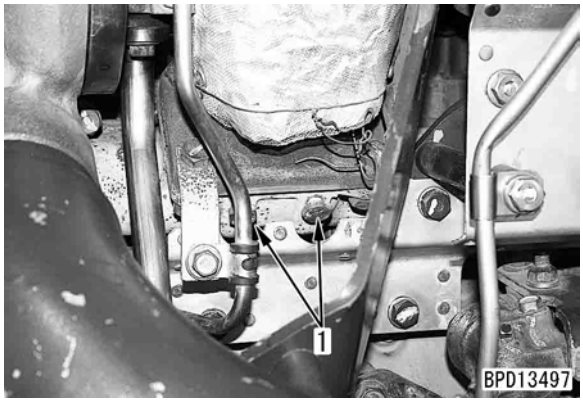

3. Install sensor [1] of digital thermometer **B** and connect them to meter [2].
   ★ Clamp the wiring harness of the digital thermometer so that it will not touch a hot part during measurement.

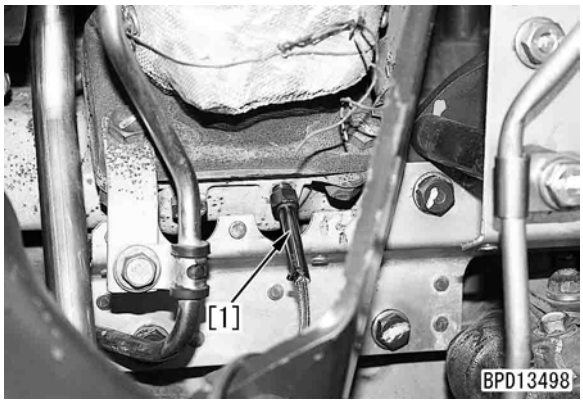

4. When measuring maximum exhaust temperature for troubleshooting
   Operate the machine actually and measure the maximum exhaust temperature.
   ★ Use the PEAK mode of the thermometer.
   ★ The exhaust temperature largely depends on the outside air temperature (intake air temperature of the engine). Accordingly, if any abnormal value is obtained, correct it by the following calculation.
   - Corrected value [°C] = Measured value + 2 × (20 – Outside air temperature)

5. Procedure for measuring exhaust temperature periodically for preventive maintenance (Pm clinic)
   ★ If the torque converter is stalled simply, the torque converter oil is overheated before the exhaust temperature is stabilized. Accordingly, measure according to the following procedure.
   1) Turn the starting switch ON and set the machine monitor to Adjustment function of the service mode.
      - Adjustment code: **0530** (Stall mode)
      ★ For the operating method, see Special functions of machine monitor (EMMS).

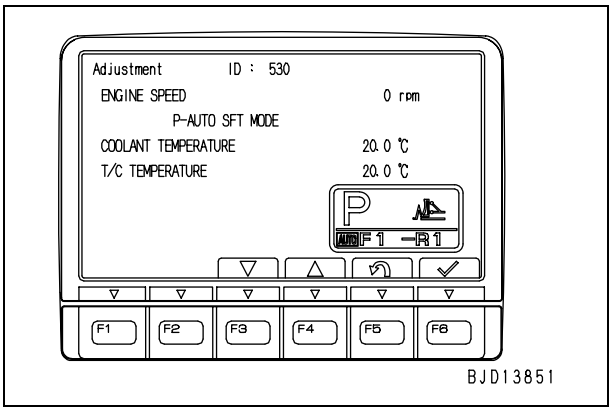

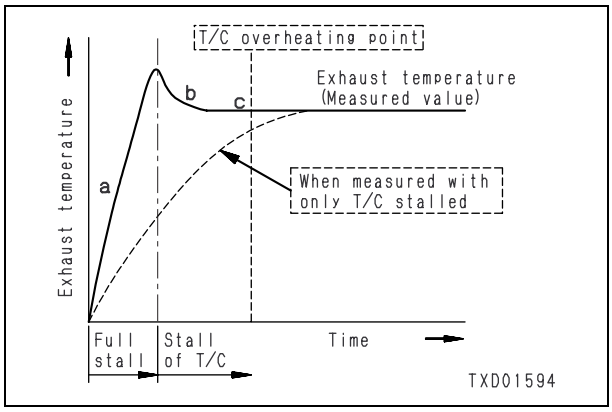

2) Start the engine and set the fuel control dial in the low idle (MIN) position.
3) Operate the shiftup (UP) switch of the PCCS lever and set the preset mode display section to [F3-R3].
   ★ The preset mode display section (at the right bottom of the screen) can be set to [F3-R3] only while the Adjustment function is selected.
4) Set the work equipment lock lever in the free position and operate the ripper control lever to set the ripper lift cylinder to the raise stroke end.
5) While pressing the brake pedal securely, set the parking brake lever in the free position and set the direction of PCCS lever in the forward position.
   ★ Before going to the next step, check that [F3] is displayed in the gear speed display section (at the right bottom of the screen).
   ★ Keep the steering system in neutral.
6) Press the decelerator pedal and set the fuel control dial in the high idle (MAX) position.
7) Return the decelerator pedal slowly to stall the torque converter and relieve the ripper raise system to raise the exhaust temperature to about 650 °C (Condition (a) in the figure) with the engine at high idle.

   ⚠ **Keep pressing the brake pedal securely and keep your right foot on the decelerator pedal for safety until the work is finished.**

8) Under the condition of step 7), stop relieving the ripper raise system and lower the exhaust temperature by only stalling the torque converter (Condition (b) in the figure).
   ★ If the exhaust temperature does not lower but rises, set the temperature high in step 7).
9) After the exhaust temperature is lowered and stabilized, measure the exhaust temperature (Condition (c) in the figure).

   ⚠ **Just after the power train oil temperature (T/C TEMPERATURE) reaches about 120 °C, return the direction of PCCS lever to neutral and lower the power train oil temperature with the engine at high idle.**

   ★ The border between the green range and red range of the power train oil temperature gauge indicates about 120 °C.

6. After finishing measurement, remove the measuring instruments and return the removed parts.

Measuring exhaust gas color

★ Measuring instruments for exhaust gas color

Symbol		Part No.	Part name
C	1	799-201-9001	Handy smoke checker
	2	Commercially available	Smoke meter

⚠ **Stop the machine on level ground, lower the work equipment to the ground, stop the engine, and set the parking brake lever and work equipment lock lever in the lock position.**

⚠ **Be careful not to touch any hot part of the engine when removing or installing the measuring tools.**

★ If an air source and an electric power source are not available in the field, use handy smoke checker **C1**. When recording official data, use smoke meter **C2**.

★ Measure the exhaust gas color under the following condition.

- Engine coolant temperature: Within operating range

1. Measuring with handy smoke checker C1

1) Stick a sheet of filter paper to smoke checker **C1**.
2) Insert the exhaust gas intake pipe in exhaust pipe (1).
3) Start the engine.
4) Accelerate the engine suddenly or run it at high idle and operate the handle of smoke checker **C1** so that the filter paper will absorb the exhaust gas.

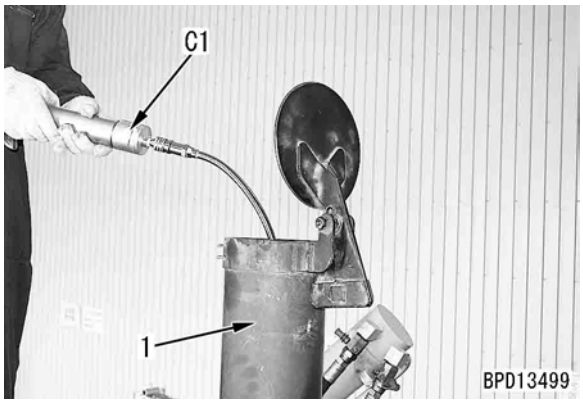

5) Remove the filter paper and compare it with the attached scale.
6) After finishing measurement, remove the measuring instrument and return the removed parts.

2. Measuring with smoke meter C2

1) Insert probe [1] of smoke meter **C2** in the outlet of exhaust pipe (1) and fix it to the exhaust pipe with a clip.

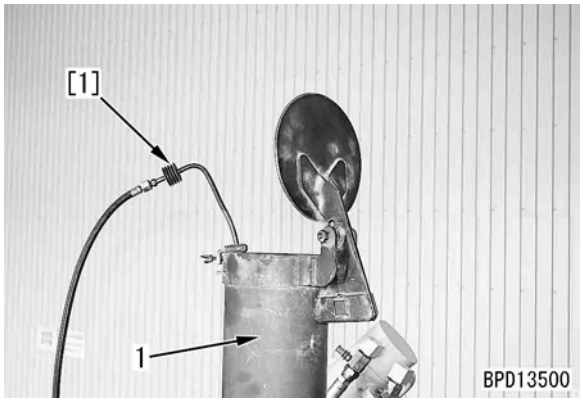

2) Connect the probe hose, receptacle of the accelerator switch, and air hose to smoke meter **C2**.
   ★ Limit the supplied air pressure to 1.5 MPa {15 kg/cm²}.
3) Connect the power cable to a receptacle of AC 100 V.
   ★ Before connecting the cable, check that the power switch of the smoke meter is turned OFF.
4) Loosen the cap nut of the suction pump and fit the filter paper.
   ★ Fit the filter paper securely so that the exhaust gas will not leak.
5) Turn power switch of smoke meter **C2** ON.

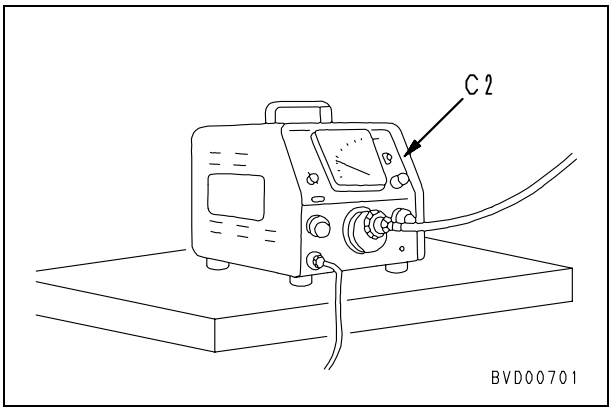

6) Start the engine.
7) Accelerate the engine suddenly or run it at high idle and press the accelerator pedal of smoke meter **C2** and collect the exhaust gas into the filter paper.
8) Place the contaminated filter paper on the clean filter paper (at least 10 sheets) in the filter paper holder and read the indicated value.
9) After finishing measurement, remove the measuring instrument and return the removed parts.

Adjusting valve clearance

★ Measuring instruments for valve clearance

Symbol	Part No.	Part name
D	Commercially available	Thickness gauge

⚠ **Stop the machine on level ground, lower the work equipment to the ground, stop the engine, and set the parking brake lever and work equipment lock lever in the lock position.**

★ Adjust the valve clearance under the following condition.
- Engine coolant temperature: Normal temperature

1. Remove the engine hood assembly and air cleaner together.
   Engine hood assembly: **170 kg**
2. Remove all cylinder head covers (1).

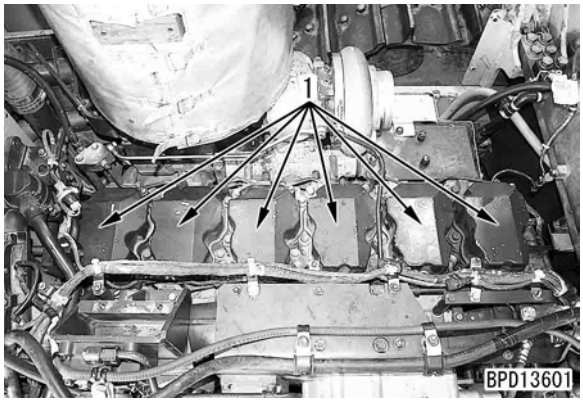

3. Remove the inspection plate on the right of the radiator guard.
4. Rotate the crankshaft forward to bring the stamped "1.6TOP" line (a) of the damper to pointer (2) and set the No. 1 cylinder to the compression top dead center.
   ★ Rotate the crankshaft with the hexagonal part at the end of the water pump drive shaft.
   ★ When the No. 1 cylinder is at the compression top dead center, the rocker arm of the No. 1 cylinder can be moved by the valve clearance with the hand. If the rocker arm cannot be moved, the No. 1 cylinder is not at the compression top dead center. In this case, rotate the crankshaft one more turn.

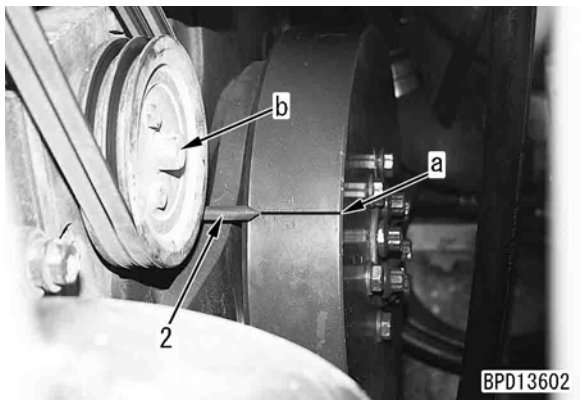

5. While fixing adjustment screw (3), loosen locknut (4).
   ★ After setting the No. 1 cylinder to the compression top dead center, adjust the valve clearance of the No. 1 cylinder.
6. Insert thickness gauge **D** in the clearance between rocker arm (5) and cross head (6) and adjust the valve clearance with adjustment screw (3).
   ★ With the clearance gauge inserted, turn the adjustment screw to a degree that you can move the thickness gauge lightly.
   ★ Valve clearance
   Intake valve : 0.35 mm
   Exhaust valve: 0.57 mm
7. While fixing adjustment screw (3), tighten locknut (4).
   Locknut:
   45.1 – 51.0 Nm {4.6 – 5.2 kgm}
   ★ After tightening the locknut, check the valve clearance again.

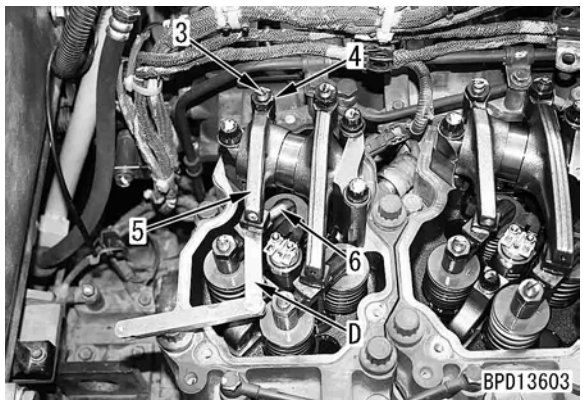

8. After adjusting the No. 1 cylinder, rotate the crankshaft forward by 120 ° to set the stamped TOP line of each cylinder to pointer (2) according to the firing order and adjust the valve clearance.
   - Firing order: 1–5–3–6–2–4
9. After finishing adjustment, return the removed parts.
   Cylinder head cover mounting bolt:
   29.4 – 34.3 Nm {3.0 – 3.5 kgm}

Measuring compression pressure

★ Measuring tools for compression pressure

Symbol		Part No.	Part name
E	1	795-502-1590	Compression gauge
	2	795-471-1330	Adapter
		6261-71-6150	Gasket

⚠ **Stop the machine on level ground, lower the work equipment to the ground, stop the engine, and set the parking brake lever and work equipment lock lever in the lock position.**

★ When measuring the compression pressure, take care not to burn yourself on the exhaust manifold, muffler, etc. or get caught in a rotating part.

★ Measure the compression pressure under the following conditions.
- Engine oil temperature: 40 – 60 °C

1. Remove the engine hood assembly and air cleaner together.
   Engine hood assembly: **170 kg**
2. Remove cylinder head cover (1) of the cylinder to measure the compression pressure.

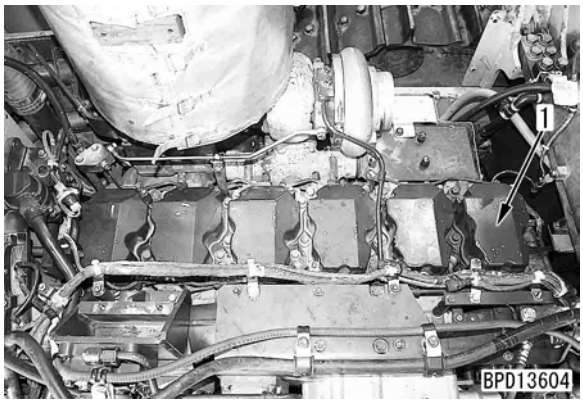

3. Bring the cylinder to be tested to the compression top dead center and remove rocker arm assembly (2).
   ★ For the procedure for bringing each cylinder to the compression top dead center, see Adjusting valve clearance.
4. Disconnect fuel high-pressure tube (3) and injector wiring harness (4) and remove injector (5) and wiring harness.
   ★ Disconnect the terminal of the injector wiring harness on the injector side and the bracket on the rocker housing side and remove the injector wiring harness (Loosen the 2 terminal nuts alternately).
   ★ Pass a wire under the fuel path projected sideways and pull up the injector (Do not pry the injector top up).

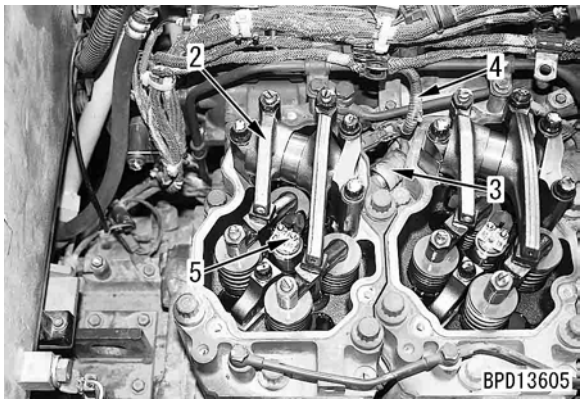

5. Install adapter **E2** to the mounting hole on the injector and connect compression gauge **E1**.
   ★ Be sure to fit the gasket to the injector end.
   ★ Fix the adapter with the injector holder.
   Holder mounting bolt:
   58.8 – 73.5 Nm {6.0 – 7.5 kgm}
   ★ Apply a little amount of engine oil to the connecting parts of the adapter and gauge so that air will not leak easily.
6. Install rocker arm assembly (2) and adjust the valve clearance.
   Rocker arm mounting bolt:
   93 – 103 Nm {9.5 – 10.5 kgm}
   ★ See Adjusting valve clearance.

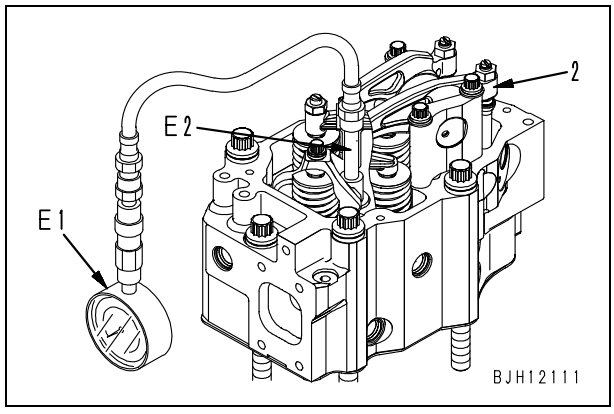

7. Disconnect power supply connector EGC3 (6) of the engine controller.
   ⚠ **If this connector is not disconnected, the engine will start during measurement and will be dangerous. Accordingly, be sure to disconnect this connector.**
   ⚠ **Cover the controller side and wiring harness side with vinyl sheets, etc. to prevent electric leakage and ground fault.**

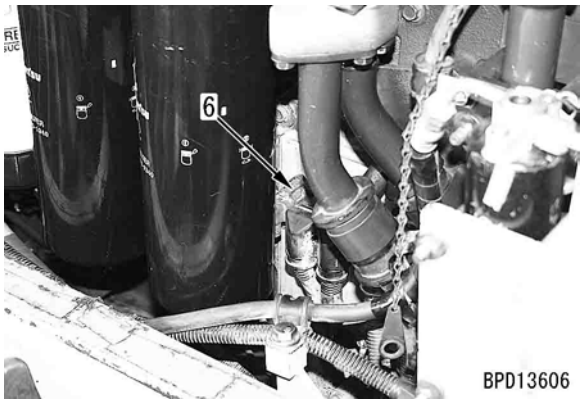

8. Turn the starting switch ON and set the machine monitor to Monitoring function of the service mode.
   - Monitoring code: **01002 Engine Speed**
   ★ For the operating method, see Special functions of machine monitor (EMMS).

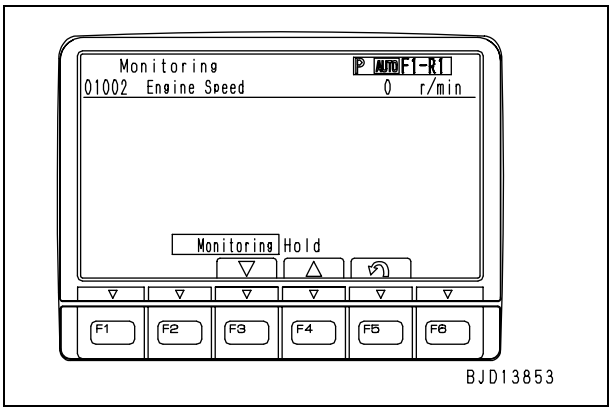

9. Rotate the engine with the starting motor and measure the compression pressure.
   ★ Read the pressure gauge pointer when it is stabilized.
   ★ When measuring the compression pressure, check that the engine speed is in the range of the measurement condition.

10. After finishing measurement, remove the measuring instruments and return the removed parts.

★ Install the injector and fuel high-pressure tube according to the following procedure.
★ Before installing the injector, replace the copper gasket and O-ring with new ones.
1) Push in injector (11) with the hand to assemble holder (12) temporarily.
2) Tighten bolt (13) and washer (14) temporarily.
   Spherical part of washer: **Engine oil**
3) Tighten sleeve nut (15) of the fuel high-pressure tube temporarily.
4) Tighten bolt (13) permanently.
   Bolt: **58.8 – 73.5 Nm {6 – 7.5 kgm}**
5) Tighten sleeve nut (15) permanently.
   Sleeve nut: **39.2 – 49.0 Nm {4 – 5 kgm}**

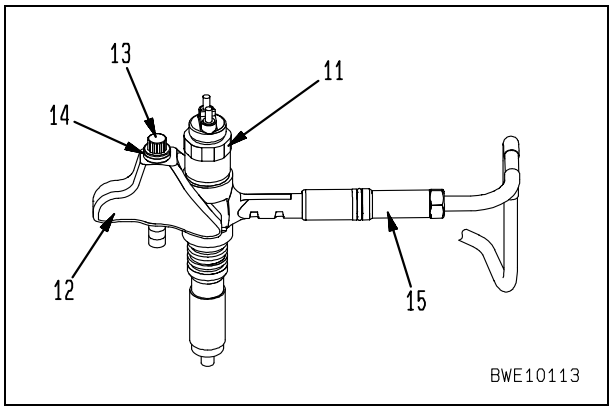

★ Install the injector wiring harness according to the following procedure.
1) Install the injector wiring harness to the rocker arm housing and fix the connector side with the plate.
2) Fix the intermediate clamp with the clip.
3) Tighten the nut on the injector side.
   Nut: **2 ± 0.2 Nm {0.2 ± 0.02 kgm}**
4) Secure the clamp and spacer with the bolt.
   Rocker arm assembly mounting bolt: **93 – 103 Nm {9.5 – 10.5 kgm}**

★ Adjust the valve clearance. For details, see Adjusting valve clearance.
   Cylinder head cover mounting bolt: **29.4 – 34.3 kgm {3.0 – 3.5 kgm}**

Measuring blow-by pressure

★ Measuring instrument for blow-by pressure

Symbol	Part No.	Part name
F	799-201-1504	Blow-by checker

⚠ **Stop the machine on level ground, lower the work equipment to the ground, stop the engine, and set the parking brake lever and work equipment lock lever in the lock position.**

★ Measure the blow-by pressure under the following conditions.
- Engine coolant temperature: Within operating range
- Power train oil temperature: Within operating range
- Hydraulic oil temperature: Within operating range

1. Open the engine left side cover and left mudguard.

2. Install nozzle [1] and hose [2] of blow-by checker F to the end of breather hose (1) and connect them to gauge [3].

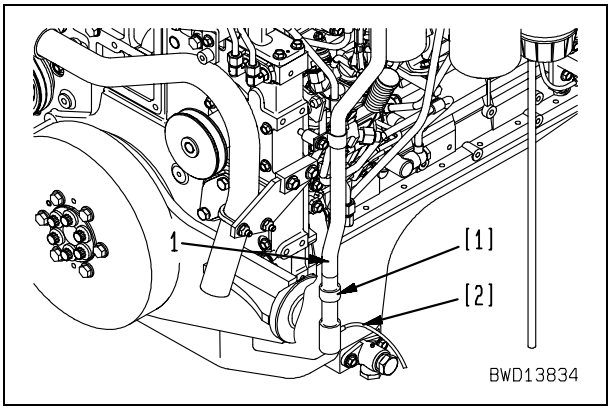

3. While running the engine at high idle, stall the torque converter and measure the blow-by pressure.
   - ★ For the procedure for stalling the torque converter, see Measuring engine speed.
   - ★ Normally, the blow-by pressure should be measured while the engine is operated at the rated output. In the field, however, an approximate value can be obtained by stalling the torque converter.
   - ★ If it is impossible to run the engine at the rated output or stall the torque converter, measure while the engine is running at high idle. The value obtained in this case is about 80% of the blow-by pressure at the rated output.
   - ★ The blow-by pressure may vary largely with the engine condition. If the measured value is judged abnormal, check for increase of oil consumption, bad exhaust gas color, deterioration of oil, high deterioration speed of oil, etc. which are related to the abnormal blow-by pressure.

4. After finishing measurement, remove the measuring instruments and return the removed parts.

Measuring engine oil pressure

★ Measuring instruments for engine oil pressure

Symbol		Part No.	Part name
G	1	799-101-5002	Hydraulic tester
		790-261-1204	Digital hydraulic tester
	2	799-401-2320	Hydraulic tester

⚠ **Stop the machine on level ground, lower the work equipment to the ground, stop the engine, and set the parking brake lever and work equipment lock lever in the lock position.**

★ Measure the engine oil pressure under the following condition.
- Engine coolant temperature: Within operating range

1. Open the engine left side cover and left mudguard.

2. Remove engine oil pressure pickup plug (1) from the cylinder block.

3. Install nipples [1] and [2] of hydraulic tester **G1** and connect them to hydraulic tester **G2**.
   ★ Since the size of the plug hole is R1/4, quick nipples (799-101-5210) may be used instead of nipples [1] and [2].

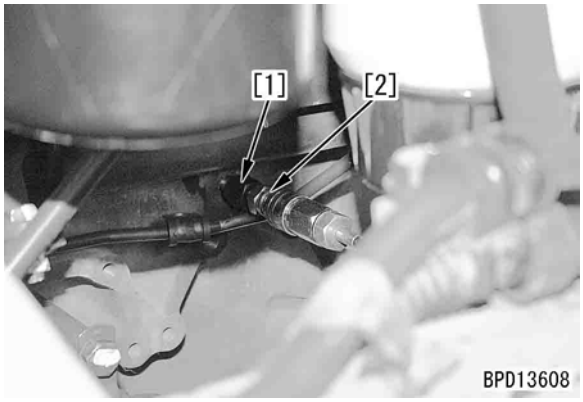

4. Run the engine at low idle and high idle and measure the engine oil pressure.

5. After finishing measurement, remove the measuring instruments and return the removed parts.

Handling fuel system parts

★ Precautions for testing and maintaining fuel system
The common rail fuel injection system (CRI) consists of more precise parts than the conventional fuel injection pump and nozzle. If foreign matter enters this system, it can cause a trouble.
When testing and maintaining the fuel system, take care more than the past. If dust, etc. sticks to any part, wash that part thoroughly with clean fuel.

★ Precautions for replacing fuel filter cartridge
Be sure to use the Komatsu genuine fuel filter cartridge.
Since the common rail fuel injection system (CRI) consists of more precise parts than the conventional fuel injection pump and nozzle, it employs a high-efficiency special filter to prevent foreign matter from entering it. If a filter other than the genuine one is used, the fuel system may have a trouble. Accordingly, never use such a filter.

Releasing residual pressure from fuel system

★ Pressure is generated in the low-pressure circuit and high-pressure circuit of the fuel system while the engine is running.
Low-pressure circuit:
Feed pump – Fuel filter – Supply pump
High-pressure circuit:
Supply pump – Common rail – Injector

★ The pressure in both low-pressure circuit and high-pressure circuit lowers to a safety level automatically 30 seconds after the engine is stopped.

★ Before the fuel circuit is tested and its parts are removed, the residual pressure in the fuel circuit must be released completely. Accordingly, observe the following.

⚠ **Before testing the fuel system or removing its parts, wait at for least 30 seconds after stopping the engine until the residual pressure in the fuel circuit is released. (Do not start the work just after stopping the engine since there is residual pressure.)**

Measuring fuel pressure

★ Measuring instruments for fuel pressure

Symbol		Part No.	Part name
H	1	799-101-5002	Hydraulic tester
		790-261-1204	Digital hydraulic tester
	2	799-401-2320	Hydraulic tester
	3	795-471-1450	Adapter
		07005-00812	Gasket

⚠ **Stop the machine on level ground, lower the work equipment to the ground, stop the engine, and set the parking brake lever and work equipment lock lever in the lock position.**

★ Test only the fuel pressure in the low-pressure circuit from the feed pump through the fuel filter to the supply pump.

⚠ **Since the pressure in the high-pressure circuit from the supply pump through the common rail to the injector is very high, it cannot be measured.**

1. Open the engine left side cover and remove fuel pressure pickup plug (1) from the top of the fuel filter.

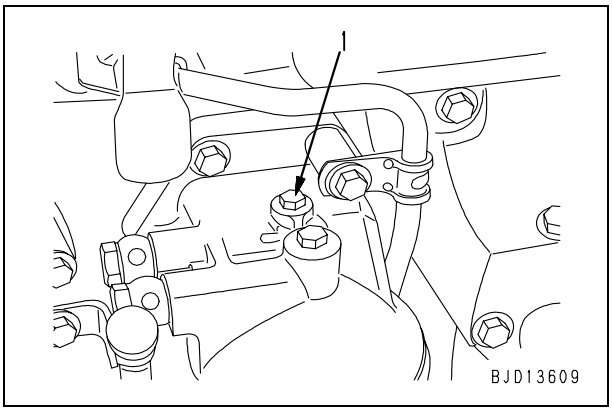

2. Install adapter **H3** and elbow [1] and nipple [2] of hydraulic tester **H1** and connect them to hydraulic tester **H2**.

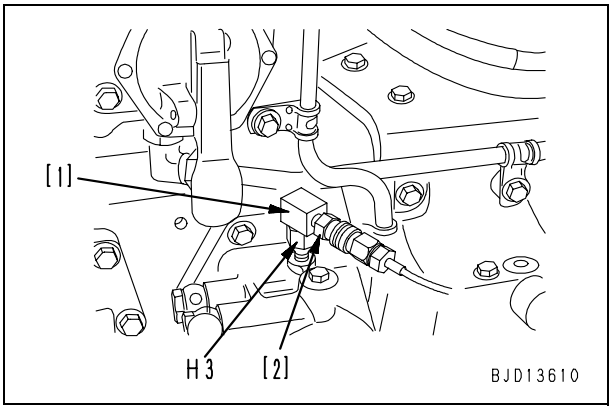

3. Run the engine at high idle and measure the fuel pressure.
   ★ If the fuel pressure is in the following range, it is normal.

Engine speed	Fuel pressure
High idle	0.15 – 0.3 MPa {1.5 – 3 kg/cm²}

4. After finishing measurement, remove the measuring instruments and return the removed parts.
   Plug: **7.84 – 9.8 Nm {0.8 – 1.0 kgm}**

Measuring fuel return rate and fuel leakage

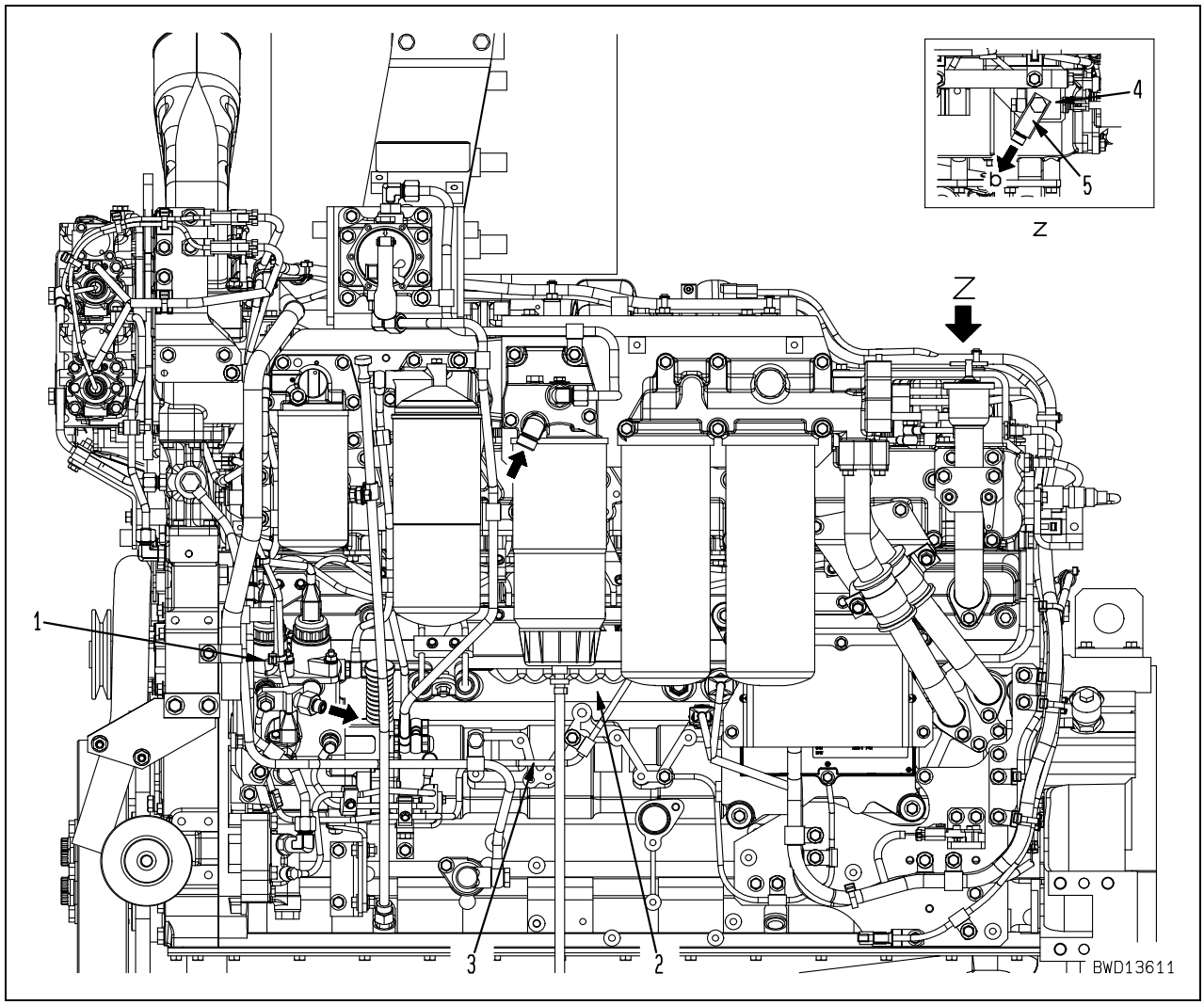

★ Measuring instruments for return rate and fuel leakage

Symbol		Part No.	Part name
J	1	6151-51-8490	Spacer
	2	6206-71-1770	Joint
	3	Commercially available	Hose
	4	Commercially available	Hose
	5	Commercially available	Measuring cylinder
	6	Commercially available	Stopwatch

★ Prepare an oil pan of about 20 ℓ to receive the fuel flowing out during the test.

⚠ **Stop the machine on level ground, lower the work equipment to the ground, stop the engine, and set the parking brake lever and work equipment lock lever in the lock position.**

1. Preparation work

1) Open the engine left side cover and left mudguard.
2) Remove tube (3) between supply pump (1) and common rail (2).
   ★ In the figure, 1 oil filter is removed temporarily from the common rail side.
   ★ Disconnect both ends of the tube, loosen the clamp, and move the tube to the opposite side of the cylinder block.

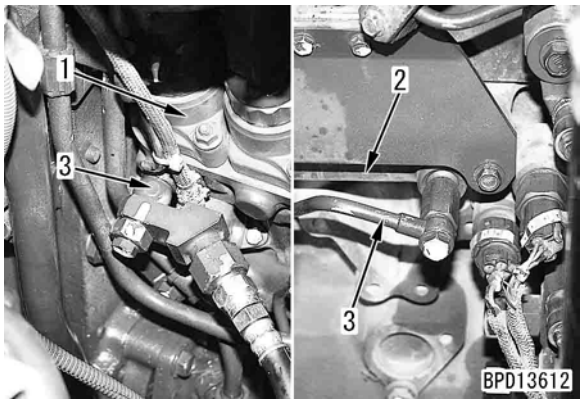

3) Insert spacer **J1** on supply pump (1) side and tighten the removed joint bolt again.
   ★ Connect the return pipe to the fuel tank again, too.
   ★ Be sure to fit the gaskets to both ends of the spacer.

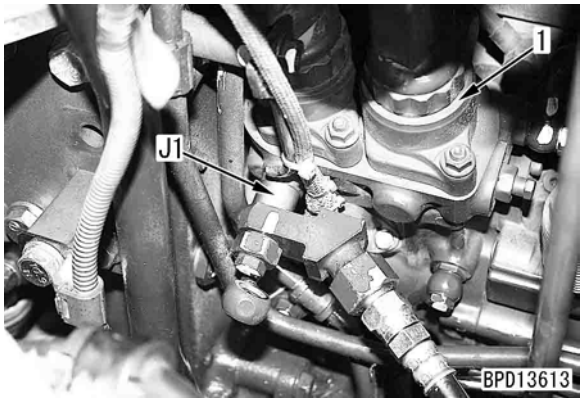

4) Insert joint **J2** on common rail (2) side and tighten the removed joint bolt again.
   ★ In the figure, 1 oil filter is removed temporarily from the common rail side.
   ★ Be sure to fit the gaskets to both ends of the joint.
5) Connect test hose **J3** to the end of joint **J2**.
   ★ Bind the connecting part of the test hose with a wire, etc. to prevent it from coming off.
   ★ The above is the preparation work for measuring the leakage from the pressure limiter.

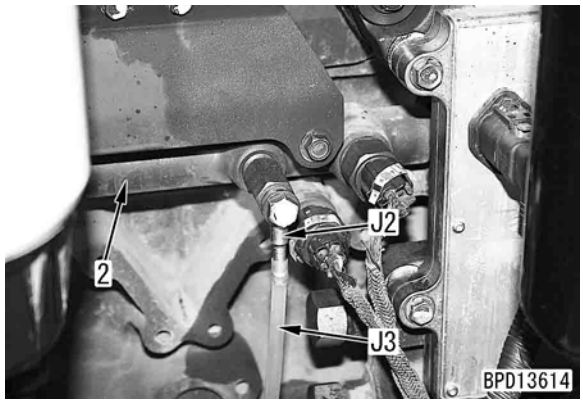

2. Testing leakage from pressure limiter

1) Lay test hose **J3** so that it will not slacken and put its end in the oil pan.
2) Turn the starting switch ON and set the machine monitor to Monitoring function of the service mode.
   ● Monitoring code:
   01002 Engine Speed
   ★ For the operating method, see "Special functions of machine monitor (EMMS)".

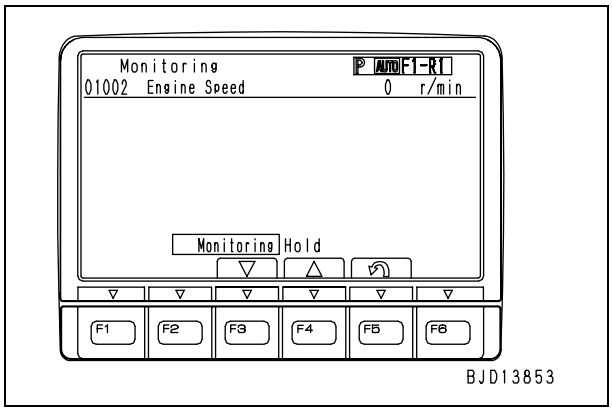

3) Run the engine at high idle and stall the torque converter. After the engine speed is stabilized, measure the leakage in 1 minute with measuring cylinder **J5**.
   ★ For the procedure for stalling the torque converter, see Measuring torque converter stall speed.
   ★ You may measure the leakage for 20 seconds and judge by multiplying the result by 3.
   ★ If the leakage from the pressure limiter is in the following range, it is normal.

Engine speed	Leakage (cc/min)
Torque converter stall	Max. 10

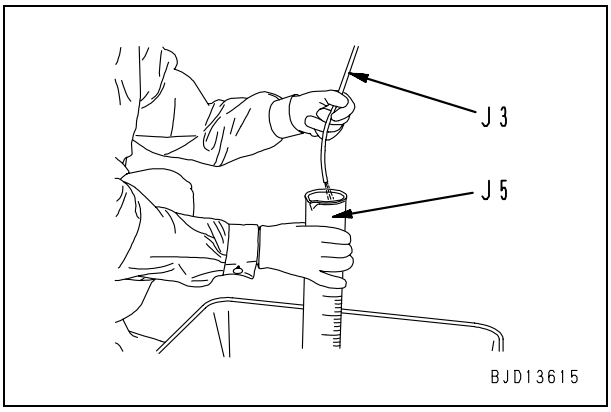

4) After finishing measurement, stop the engine.

3. Testing return rate from injector

★ Keep the hose on the pressure limiter side connected and keep its end in the oil pan while measuring the return rate from the injector.

1) Disconnect return hose (5) of return block (4) and connect test hose **J4**.
   ★ Stop the return hose with a plug, etc. and fix it to the fuel tank.
   Plug: 07376-70315
   ★ Bind the connecting part of the test hose with a wire, etc. to prevent it from coming off.

2) Lay test hose **J4** so that it will not slacken and put its end in the oil pan.

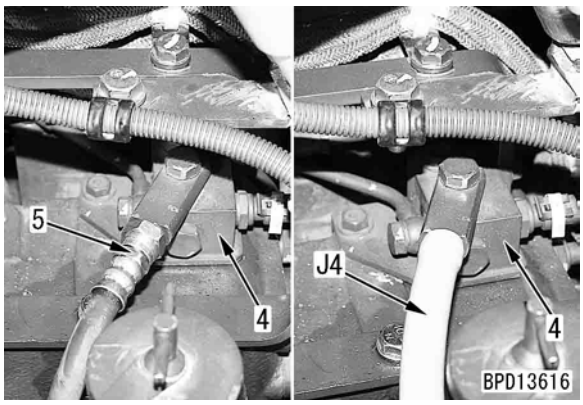

3) Turn the starting switch ON set the machine monitor to Adjusting function of the service mode.
   ● Adjustment code: **0530** (Stall mode)
   ★ For the operating method, see "Special functions of machine monitor (EMMS)".

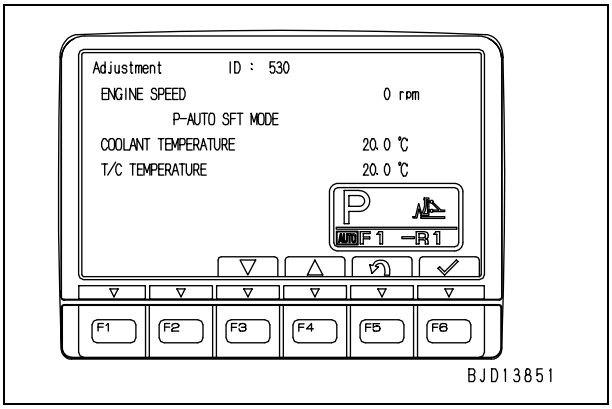

4) Run the engine at high idle and stall the torque converter. After the engine speed is stabilized, measure the return rate in 1 minute with measuring cylinder **J5**.
   - ★ For the procedure for stalling the torque converter, see Measuring engine speed.
   - ★ You may measure the return rate for 20 seconds and judge by multiplying the result by 3.
   - ★ If the supply pump is not supplying fuel, the engine speed may not rise. In this case, record the engine speed, too, during the measurement.
   - ★ If the return rate (spill) from the injector is in the following range, it is normal.

Torque converter stall speed (rpm)	Limit of return rate (spill) (cc/min)
1,600	960
1,700	1,020
1,800	1,080
1,900	1,140
2,000	1.200

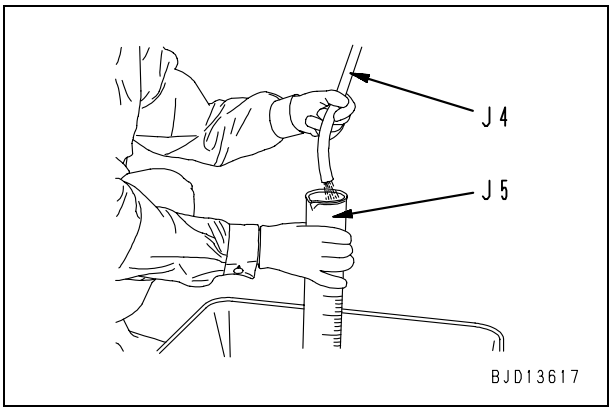

5) After finishing measurement, stop the engine.

4. Work after finishing measurement

After finishing all measurement, remove the measuring instruments and return the removed parts.

Bleeding air from fuel circuit

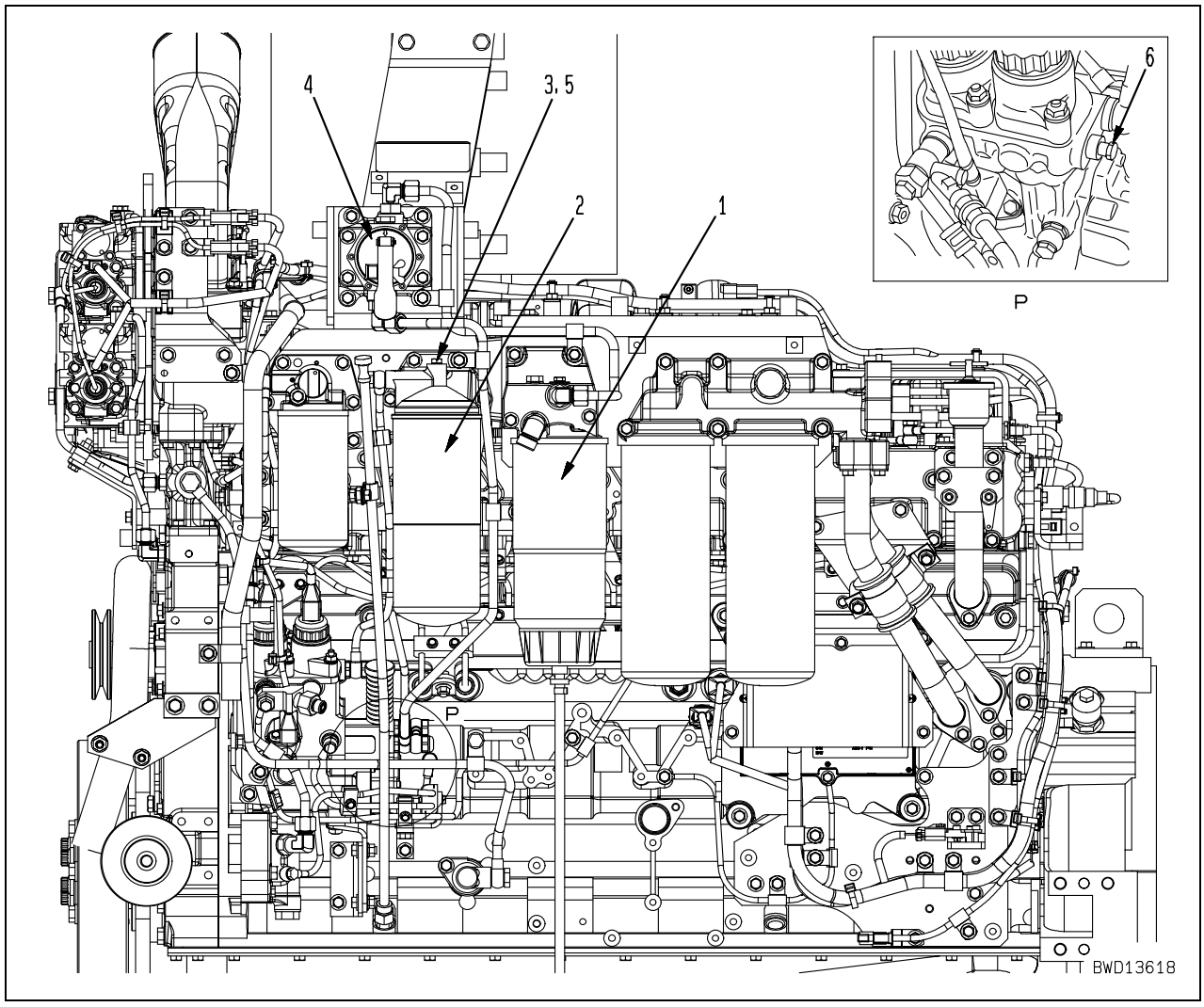

★ If fuel is used up or if a fuel circuit part is removed and installed, bleed air from the fuel circuit according to the following procedure.

1. Open the engine left side cover.

2. Remove fuel prefilter (1) and fill it with fuel.
   - ★ Fill the fuel prefilter with clean fuel and take care that dirt will not enter it.
   - ★ Check that the cap is fitted to part (a) (central hole) of the fuel prefilter, and then add fuel through part (b) (holes around the central hole).
   - ★ After filling the fuel prefilter with fuel, remove the cap from part (a).
   - ★ If clean fuel is not available, do not remove the prefilter but fill it with the fuel by operating priming pump (4).
   - ★ Do not add fuel to fuel main filter (2) from outside.

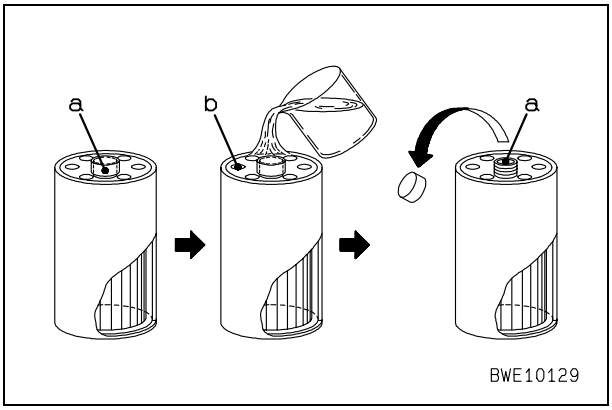

3. Install fuel prefilter (1) to the filter head.
   - ★ Apply engine oil thinly over the packing on the fuel prefilter side.
   - ★ After the packing of the fuel prefilter touches the sealing face of the filter head, tighten the fuel prefilter 3/4 turns.

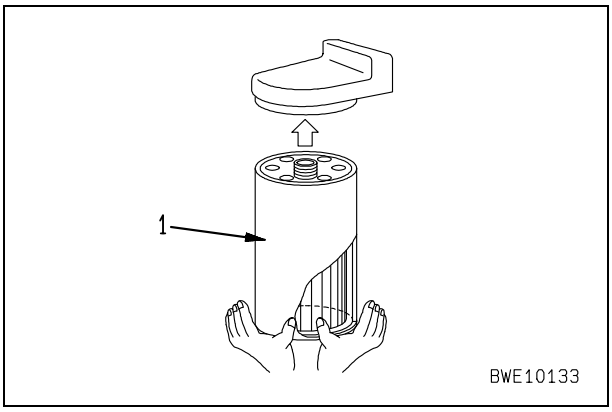

4. Remove air bleed plug (3) of fuel main filter (2) and operate priming pump (4).
   ★ Operate the priming pump until the fuel flows out of the plug hole and install the plug.
   Air bleed plug:
   7.8 – 9.8 Nm {0.8 – 1.0 kgm}

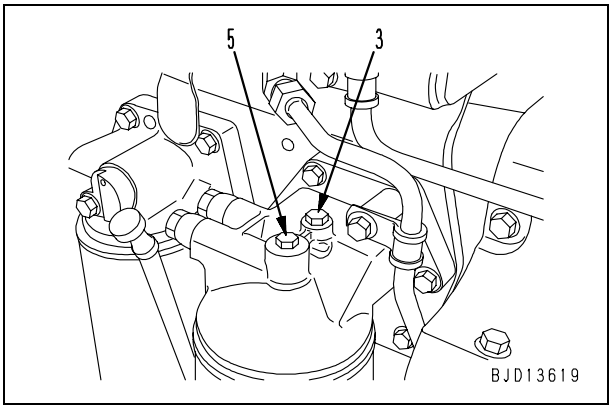

5. Remove air bleed plug (5) of the fuel main filter and operate priming pump (4).
   ★ Operate the priming pump until the fuel flows out of the plug hole and install the plug.
   Air bleed plug:
   7.8 – 9.8 Nm {0.8 – 1.0 kgm}

6. Loosen air bleeder (6) of the supply pump and operate priming pump (4) 90 – 100 times.
   ★ Operate the priming pump until the fuel flows out of the air bleeder and tighten the air bleeder. Then, operate the priming pump several times more until it becomes heavy.
   ★ Air bleeder: **4.9 – 6.9 kgm {0.5 – 0.7 kgm}**

7. Start the engine with the starting motor.
   ★ The air in the high-pressure circuit is bled automatically if the engine is cranked.
   ★ If the engine does not start, there may be still air in the low-pressure circuit. In this case, repeat the above procedure from step 4.

Measuring fuel circuit for leakage

⚠ **Very high pressure is generated in the high-pressure circuit of the fuel system. If fuel leaks while the engine is running, it is dangerous since it can catch fire.**

★ After testing the fuel system or removing and installing its parts, test it for fuel leakage according to the following procedure.

★ Clean and degrease the engine and the parts around it in advance so that you can test it easily for fuel leakage.

1. Spray color checker (developer) over the joints of the fuel supply pump, common rail, fuel injector, and high-pressure piping.

2. Run the engine at speed below 1,000 rpm and stop it after its speed is stabilized.

3. Check the fuel piping and devices for fuel leakage.
   - ★ Check mainly around the high-pressure circuit parts coated with the color checker for fuel leakage.
   - ★ If any fuel leakage is detected, repair it and inspect again from step 1.

4. Run the engine at low idle.

5. Check the fuel piping and devices for fuel leakage.
   - ★ Check mainly around the high-pressure circuit parts coated with the color checker for fuel leakage.
   - ★ If any fuel leakage is detected, repair it and inspect again from step 1.

6. Run the engine at high idle.

7. Check the fuel piping and devices for fuel leakage.
   - ★ Check mainly around the high-pressure circuit parts coated with the color checker for fuel leakage.
   - ★ If any fuel leakage is detected, repair it and inspect again from step 1.

8. Run the engine at high idle and load it.
   - ★ Relieve the ripper circuit by raising the ripper.

9. Check the fuel piping and devices for fuel leakage.
   - ★ Check mainly around the high-pressure circuit parts coated with the color checker for fuel leakage.
   - ★ If any fuel leakage is detected, repair it and inspect again from step 1.
   - ★ If no fuel leakage is detected, inspection is completed.

Testing and adjusting alternator belt tension

⚠ Stop the machine on level ground, lower the work equipment to the ground, stop the engine, and set the parking brake lever and work equipment lock lever in the lock position.

Testing

1. Open the engine right side cover and remove the inspection plate on the right of the radiator guard.

2. Press the intermediate point of the belt between alternator pulley and water pump pulley with a finger and measure deflection (a) of the belt.
   - ★ Pressing force: Approx. 98 N {Approx. 10 kg}
   - ★ Deflection (a): 13 – 16 mm

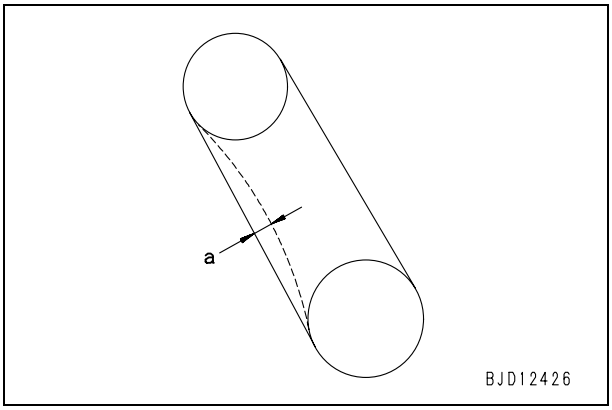

Adjusting

★ If the deflection is out of the standard range, adjust it according to the following procedure.

1. Remove the 2 mounting bolts and belt cover (1).
   - ★ Remove the belt cover only when replacing the belt.

2. Loosen 2 mounting bolts (3) of alternator (2), and then loosen lock bolt (4) of the adjustment rod.

3. Loosen locknut (5) of the adjustment rod and move alternator (2) with adjustment nut (6) to adjust the tension of the belt.

4. While fixing adjustment nut (6), tighten locknut (5).

5. Tighten locknut (4) of the adjustment rod and 2 mounting bolts (3) of alternator (2).

6. Install belt cover (1) with the 2 mounting bolts.
   - ★ Check for breakage of the pulleys, wear of the V-grooves, contact of the belts and V-grooves, and contact of the belt covers and rotating parts.
   - ★ If the belt is lengthened to the adjustment limit, cut, or cracked, replace it with new one.
   - ★ If the V-belt is replaced, adjust its tension again after 1 operating hour.
   - ★ After tightening the bolts, check that the belt tension is normal according to the above procedure.

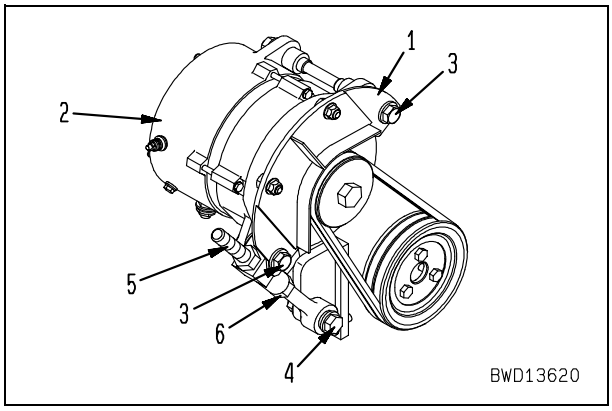

7. After testing and adjusting, return the removed parts.

Testing and adjusting air conditioner compressor belt tension

⚠ Stop the machine on level ground, lower the work equipment to the ground, stop the engine, and set the parking brake lever and work equipment lock lever in the lock position.

Testing

1. Open the engine left side cover and left mudguard.

2. Press the intermediate point of the belt between the supply pump pulley and compressor pulley with a finger and measure deflection (a) of the belt.
   - ★ Pressing force: Approx. 59 N {Approx. 6 kg}
   - ★ Deflection (a): 10 mm

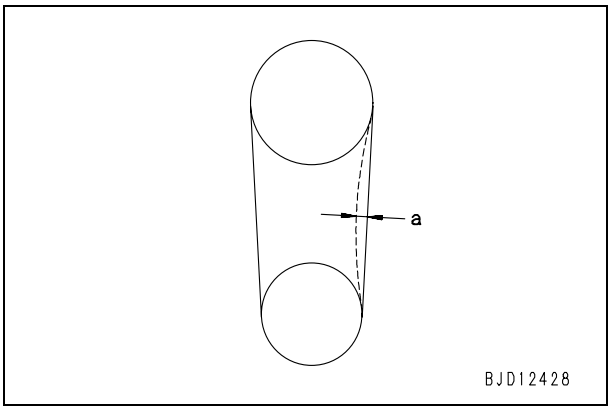

Adjusting

★ If the deflection is out of the standard range, adjust it according to the following procedure.

1. Loosen 4 bracket mounting bolts (1).

2. Loosen locknut (2) and move compressor (4) and bracket as a unit with adjustment bolt (3) to adjust the belt tension.

3. While fixing adjustment nut (3), tighten locknut (2).

4. Tighten 4 bracket mounting bolts (1).
   - ★ Check for breakage of the pulleys, wear of the V-grooves, contact of the belts and V-grooves, and contact of the belt covers and rotating parts.
   - ★ If the belt is lengthened to the adjustment limit, cut, or cracked, replace it with new one.
   - ★ If the V-belt is replaced, adjust its tension again after 1 operating hour.
   - ★ After tightening the bolts, check that the belt tension is normal according to the above procedure.

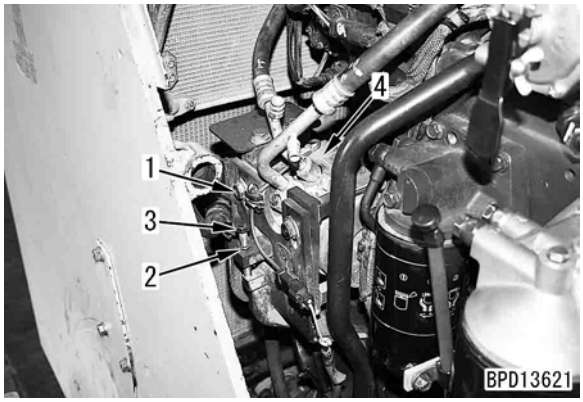

5. After testing and adjusting, return the removed parts.

Measuring fan speed

★ Measuring instrument for fan speed

Symbol	Part No.	Part name
K	795-205-1100	Tachometer kit

⚠ **Stop the machine on level ground, lower the work equipment to the ground, stop the engine, and set the parking brake lever and work equipment lock lever in the lock position.**

★ Measure the fan motor speed under the following condition.
- Hydraulic oil temperature: Within operating range

1. Open the radiator mask and remove the fan net.

2. Stick 1 reflection tape [1] of tachometer kit **K** to fan (1)

3. Set probe [2] to the reflection tape with stand [3] and connect it to tachometer [4].
   ⚠ **Take care that the probe will not interfere with the fan.**
   ★ Rotate the fan with the hand and check that the probe can sense the rotation of the reflection tape.

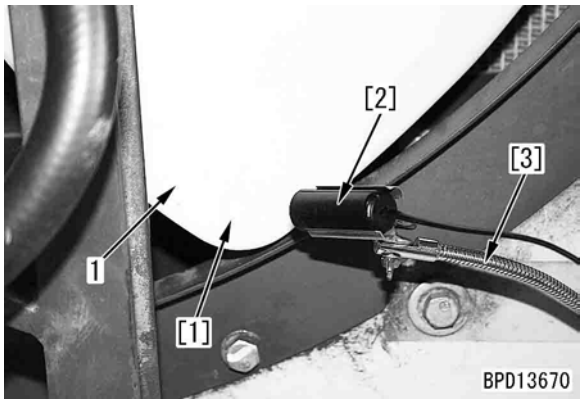

4. Close the radiator mask.
   ⚠ **Before starting the engine, be sure to close the radiator mask. Do not start the engine while the radiator mask is open.**

5. Start the engine and set the machine monitor to Adjusting function of the service mode.
   ★ Adjustment code: **1005** (Fan 100% mode)
   ★ For the operating method, see "Special functions of machine monitor (EMMS)".
   ★ If this adjustment code is displayed, the fan speed is kept at 100% speed in accordance with the engine speed, regardless of the state of the machine.

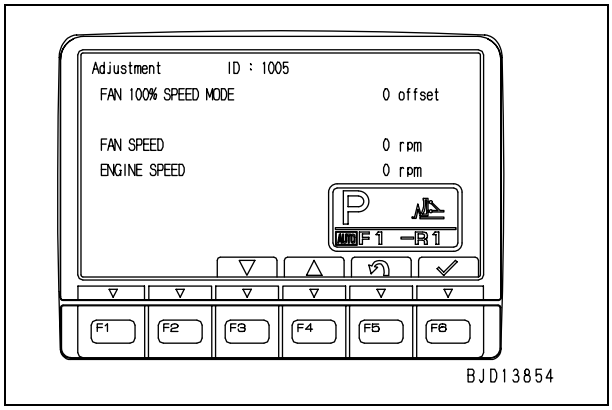

6. While running the engine at low idle and high idle, measure the fan speed

7. After finishing measurement, remove the measuring instruments and return the removed parts.

Measuring fan circuit oil pressure

★ Measuring instruments for fan circuit oil pressure

Symbol		Part No.	Part name
L	1	799-101-5002	Hydraulic tester
		790-261-1204	Digital hydraulic tester
	2	799-401-3400	Adapter (05)
	3	799-101-5220	Nipple (10 x 1.25 mm)
		07002-11023	O-ring

⚠ **Stop the machine on level ground, lower the work equipment to the ground, stop the engine, and set the parking brake lever and work equipment lock lever in the lock position.**

★ Measure the fan circuit oil pressure under the following condition.
- Hydraulic oil temperature: Within operating range

1. Open the radiator mask and remove the fan net.

2. Disconnect supply hose (1) of the fan motor.

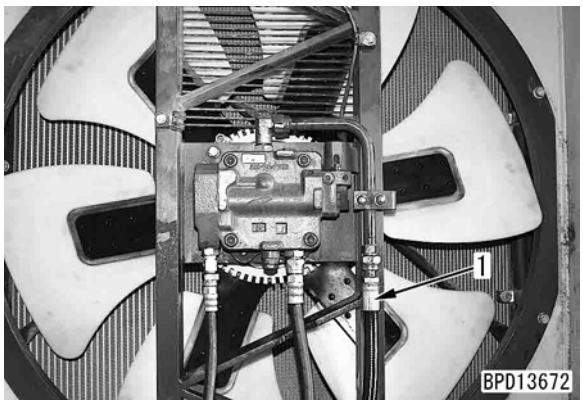

3. Install adapter **L2** and connect the disconnected hose again.

4. Install nipple **L3** and connect it to oil pressure gauge [2].
   ★ When using an analog oil pressure gauge, use one of 39.2 MPa {400 kg/cm²}.

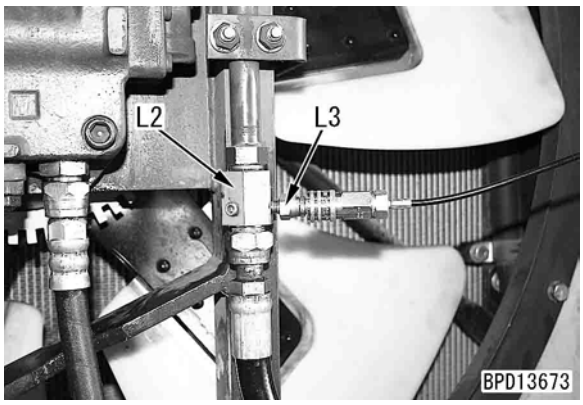

5. Close the radiator mask.
   ⚠ **Before starting the engine, be sure to close the radiator mask. Do not start the engine while the radiator mask is open.**

6. Start the engine and set the machine monitor to Adjusting function of the service mode.
   ★ Adjustment code: **1005** (Fan 100% mode)
   ★ For the operating method, see "Special functions of machine monitor (EMMS)".
   ★ If this adjustment code is displayed, the fan speed is kept at 100% speed in accordance with the engine speed, regardless of the state of the machine.

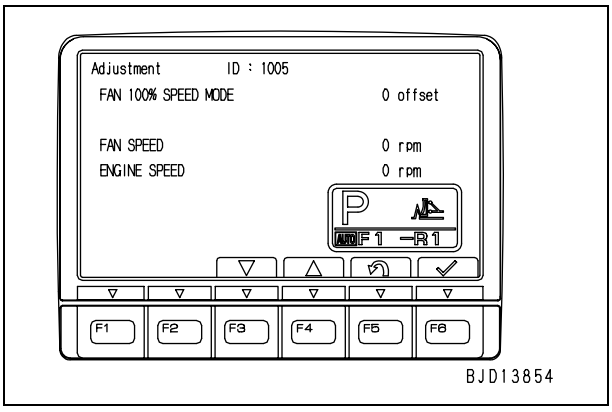

7. While running the engine at high idle, measure the fan circuit oil pressure.

8. After finishing measurement, remove the measuring instruments and return the removed parts.

Bleeding air from fan pump

★ If the fan pump is removed and installed or its piping is disconnected and connected, bleed air from the fan pump case according to the following procedure.
★ Before starting the following work, check that the hydraulic oil level is normal.

1. Remove the left step cover.

2. Loosen air bleeder (1) and leave it for 15 minutes.

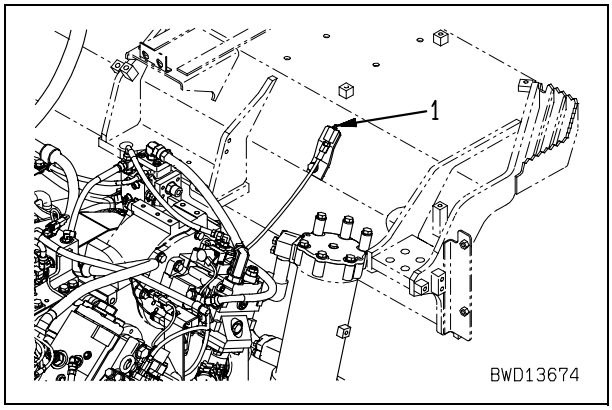

3. After 15 minutes, start the engine and run it at low idle.

4. After oil flows out of air bleeder (1), tighten air bleeder (1) and stop the engine.
   Air bleeder:
   7.8 – 9.8 Nm {0.8 – 1.0 kgm}

Adjusting fuel control dial and decelerator pedal

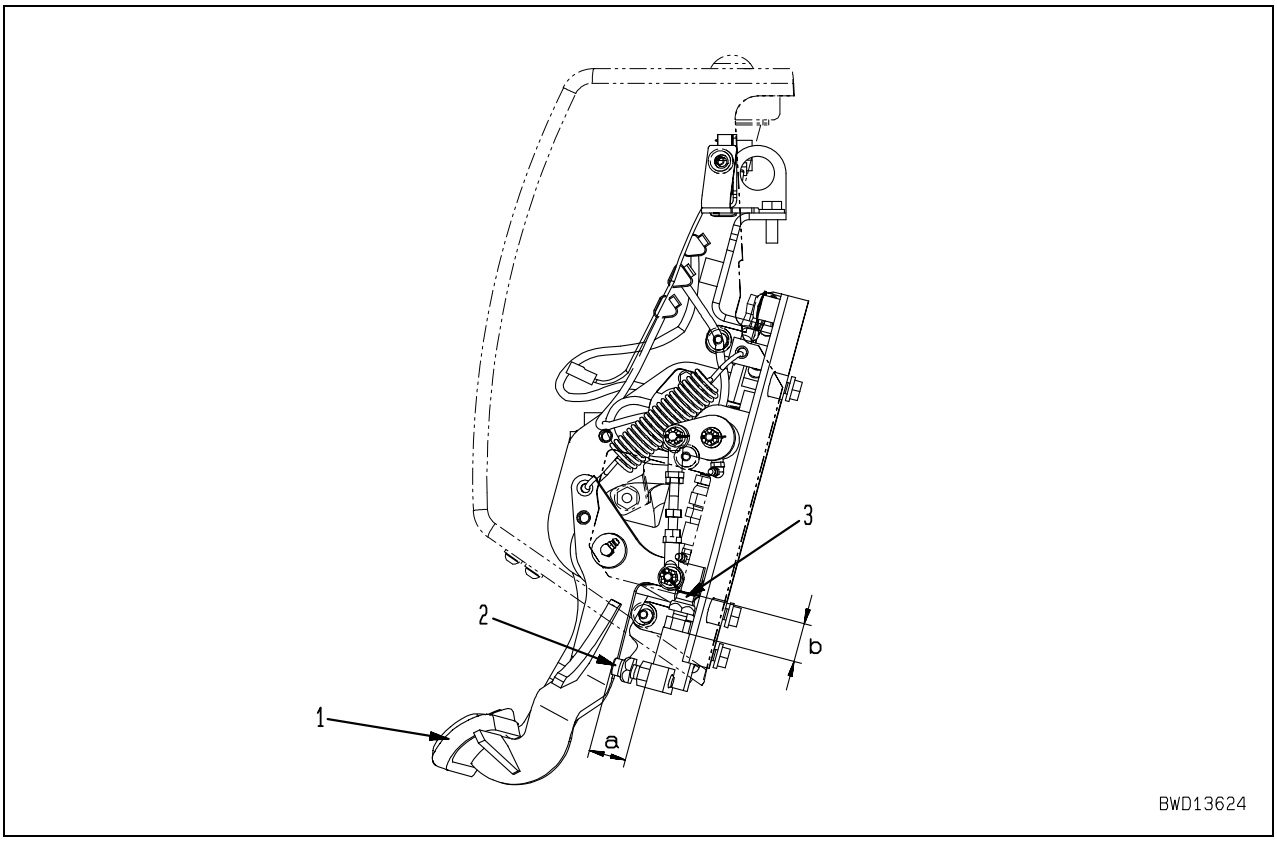

⚠ **Stop the machine on level ground, lower the work equipment to the ground, stop the engine, and set the parking brake lever and work equipment lock lever in the lock position.**

1. Outline of fuel control system

- The following signals are input as rotation command signals to the engine controller.
  1) Fuel control dial potentiometer signal
  2) Decelerator pedal potentiometer signal
  3) 3rd throttle signal (Power train controller)
- The engine controller controls the fuel control system of the engine (CRI system) according to the one of the above input signals which indicates the lowest engine speed.
- Adjust the decelerator pedal speed and high idle speed with the decelerator pedal linkage.

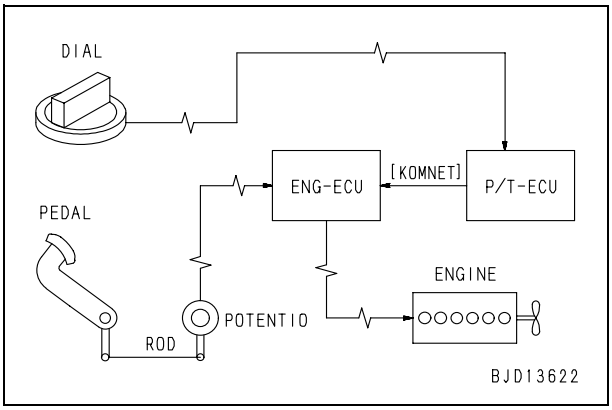

DIAL: Fuel control dial
PEDAL: Decelerator pedal
ROD: Decelerator pedal rod
POTENTIO: Decelerator pedal potentiometer
ENG-ECU: Engine controller
P/T-ECU: Power train controller
ENGINE: Engine unit (CRI devices)
[KOMNET]: KOMNET communication circuit (3rd throttle signal)

2. Preparation work

1) Remove the right cover of the dashboard and the right foot rest as a unit.
2) Start the engine and set the machine monitor to Adjusting function of the service mode.
   - Adjustment code:
     0007 (Engine decelerator cut)

   ★ For the operating method, see "Special functions of machine monitor (EMMS)".

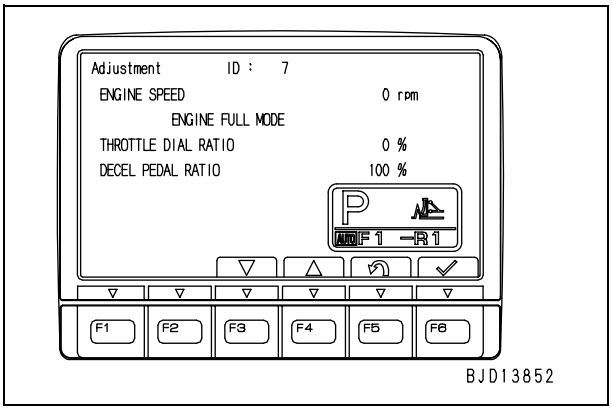

3. Adjusting decelerator pedal speed

With the fuel control dial in the high idle position (MAX), press decelerator pedal (1) to stopper bolt (2) and check that the decelerator pedal speed is normal.

- Decelerator pedal speed: 875 ± 50 rpm

★ If the decelerator pedal speed is abnormal, adjust installed dimension (a) of stopper bolt (2).

- Standard installed dimension a) of stopper bolt: 35.0 mm

4. Adjusting high idle speed

With the fuel control dial in the high idle position (MAX), release decelerator pedal (1) and check that the high idle speed is normal.

- High idle speed: 2,050 ± 50 rpm

★ If the high idle speed is abnormal, adjust it according to the following procedure.

- When the engine speed is above 1,950 rpm:
  Lower the engine speed below 1,900 rpm temporarily with stopper bolt (3) to eliminate the play of the decelerator pedal, and then adjust the engine speed to the high idle.
- When the engine speed is below 1,950 rpm:
  Adjust the engine speed to the high idle speed with stopper bolt (3).
- Standard installed dimension (b) of stopper bolt: 34.8 mm

5. Work after adjustment

After finishing all adjustment, return the removed parts.

D155AX-6 Bulldozer

Form No. SEN00679-01

© 2006 KOMATSU
All Rights Reserved
Printed in Japan 05-06 (02)

BULLDOZER

D155AX-6

Machine model	Serial number
D155AX-6	80001 and up

30 Testing and adjusting

Testing and adjusting, Part 2

Testing and adjusting, Part 2 3
Testing and adjusting, Part 2 3
Measuring power train oil pressure 3
Adjusting transmission output shaft speed sensor 11
Simple test procedure for brake performance 12
Adjusting brake pedal 13
Adjusting parking brake lever 15
Emergency escape method when power train has trouble 17
Adjusting idler clearance 20
Testing and adjusting track shoe tension 21
Measuring and adjusting work equipment and HSS oil pressure 22
Measuring control circuit basic pressure 26
Measuring work equipment lock solenoid valve output pressure 27
Emergency operation method when work equipment has trouble 28
Measuring ripper pin puller solenoid valve output pressure 30
Testing parts which cause hydraulic drift of blade and ripper 31

Measuring internal leakage of work equipment cylinder 32
Releasing residual pressure from work equipment cylinder 33
Bleeding air from work equipment cylinder 33
Adjusting work equipment lock lever 34
Adjusting blade 35
Adjusting operator's cab 37

Testing and adjusting, Part 2

Measuring power train oil pressure

★ Measuring instruments for power train oil pressure

Symbol	Part No.	Part name
M	799-101-5002	Hydraulic tester
	790-261-1204	Digital hydraulic tester

⚠ **Stop the machine on level ground, lower the work equipment to the ground, stop the engine, and set the parking brake lever and work equipment lock lever in the LOCK position.**

★ Measure the power train oil pressure under the following condition.
- Power train oil temperature: Within operating range

★ Since the power trail oil pressure pickup plugs (centralized pressure pickup section) are installed inside the right step cover, remove that cover when measuring the power train oil pressure.

★ **Pressure pickup plugs and gauges to be used**

No.	Stamp	Oil pressure to be measured	Oil pressure gauge (MPa {kg/cm²})
1	TM	Transmission main relief pressure	5.9 {60}
2	LU	Torque converter lockup clutch pressure	2.5 {25}
3	SC	Torque converter stator clutch pressure	5.9 {60}
4	F	Transmission forward clutch pressure	5.9 {60}
5	R	Transmission reverse clutch pressure	5.9 {60}
6	1ST	Transmission 1st clutch pressure	5.9 {60}
7	2ND	Transmission 2nd clutch pressure	5.9 {60}
8	3RD	Transmission 3rd clutch pressure	5.9 {60}
9	RB	Steering right brake pressure	5.9 {60}
10	LB	Steering left brake pressure	5.9 {60}
11	–	Torque converter inlet pressure	Machine monitor
	–	Torque converter outlet pressure	Machine monitor

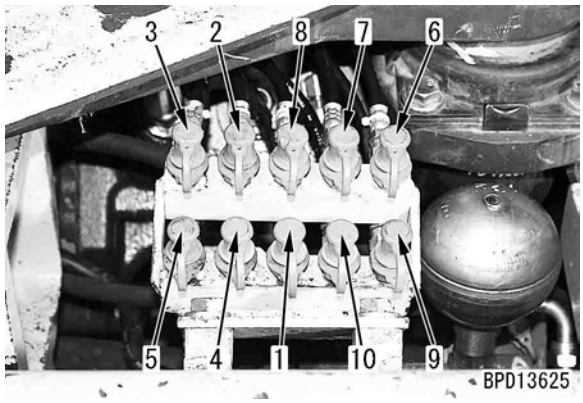

★ Since the inlet pressure and outlet pressure of the torque converter are measured with the Monitoring function of the service mode of the machine monitor, there are not oil pressure pickup plugs for them in the centralized pressure pickup section.

1. Measuring transmission main relief pressure (TM)

1) Connect oil pressure gauge [1] of hydraulic tester **M** to oil pressure pickup plug (1).
   ★ When using an analog oil pressure gauge, use one of 5.9 MPa {60 kg/cm²}.

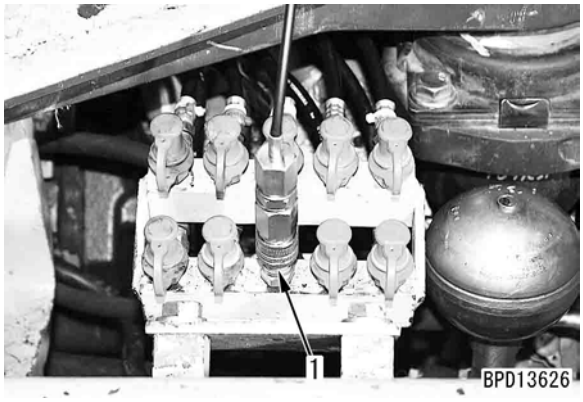

2) Start the engine and set the PCCS lever in the fully neutral position.
   ★ The parking brake lever may be set in the LOCK position.
3) While running the engine at low idle and high idle, measure the main relief pressure.

4) After finishing measurement, remove the measuring instruments and return the removed parts.

2. Measuring torque converter lockup clutch pressure (LU)

1) Connect oil pressure gauge [1] of hydraulic tester **M** to oil pressure pickup plug (2).
   ★ When using an analog oil pressure gauge, use one of 2.5 MPa {25 kg/cm²}.

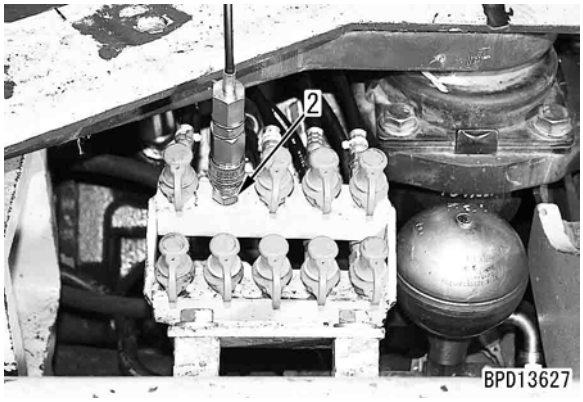

2) Start the engine and raise the machine with the blade and ripper to a height where you can run the track shoe idle.
   ⚠ **After raising the machine, set the work equipment lock lever in the LOCK position.**

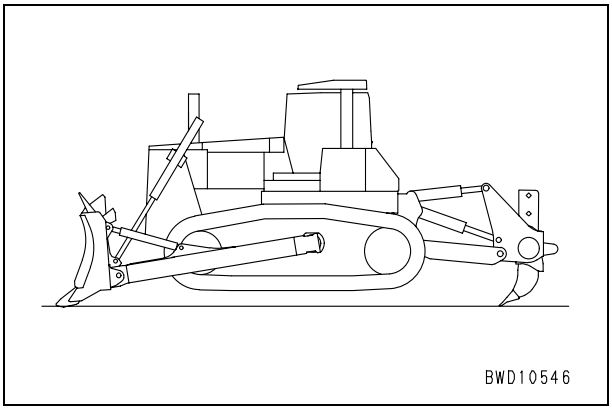

3) Set the gearshift mode and preset range as follows with the gearshift mode selector switch and shiftup or shiftdown switch.
   - Gearshift mode: Auto gearshift (Dozing)
   - Preset range: F1-R1
4) Set the machine monitor to Monitoring function of the service mode.
   - Monitoring code: **31520 T/M Fill Sw Input 2**
   ★ For the operating method, see Special functions of machine monitor (EMMS).

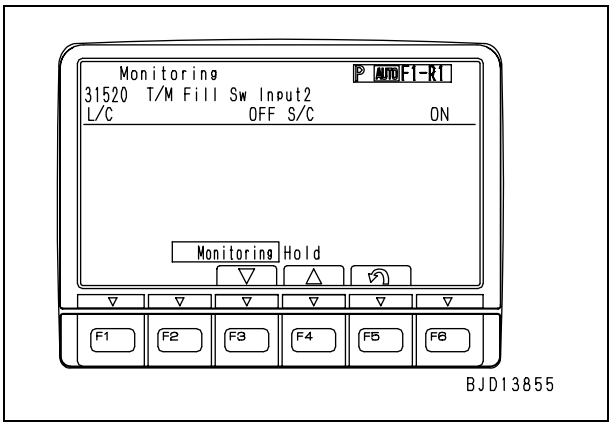

5) Set the PCCS lever in the forward position to run the track shoe idle.

⚠ Take care not to get caught in a rotating part of the track shoe during measurement.

★ Keep the steering system in neutral.

6) While running the engine at high idle, when L/U Fill Sw in the monitoring item is turned ON, measure the lockup clutch pressure.

7) After finishing measurement, remove the measuring instruments and return the removed parts.

3. Measuring torque converter stator clutch pressure (SC)

1) Connect oil pressure gauge [1] of hydraulic tester **M** to oil pressure pickup plug (3).

★ When using an analog oil pressure gauge, use one of 5.9 MPa {60 kg/cm²}.

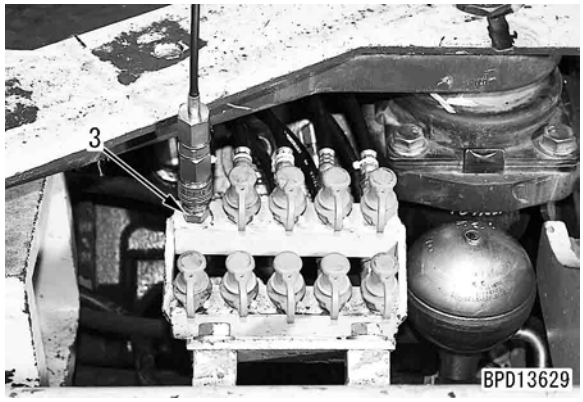

2) Start the engine and set the PCCS lever in the fully neutral position.

★ The parking brake lever may be set in the LOCK position.

3) While running the engine at low idle and high idle, measure the stator clutch pressure.

4) After finishing measurement, remove the measuring instruments and return the removed parts.

4. Measuring transmission forward clutch pressure (F)

1) Connect oil pressure gauge [1] of hydraulic tester **M** to oil pressure pickup plug (4).
   ★ When using an analog oil pressure gauge, use one of 5.9 MPa {60 kg/cm²}.

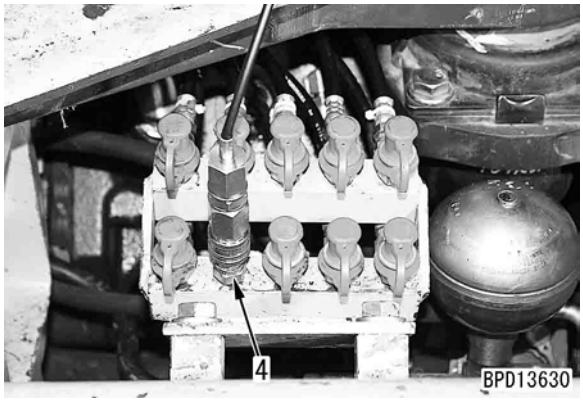

2) Start the engine and set the parking brake lever in the FREE position.
3) Set the gearshift mode and preset range as follows with the gearshift mode selector switch and shiftup or shiftdown switch.
   - Gearshift mode: Manual gearshift (Ripping)
   - Preset range: F2-R2
4) While pressing the brake pedal, set the direction of PCCS lever in the forward position and shift up the gear to the 3rd gear speed with the shiftup switch.
   ★ Keep the steering system in neutral.
   ★ Check that [F3] is displayed in the gear speed display section.
5) While running the engine at high idle, measure the forward clutch pressure.

   ⚠ **Since the torque converter is stalled, keep pressing the brake pedal securely and keep your right foot on the decelerator pedal for safety until the work is finished.**

6) After finishing measurement, remove the measuring instruments and return the removed parts.

5. Measuring transmission reverse clutch pressure (R)

1) Connect oil pressure gauge [1] of hydraulic tester **M** to oil pressure pickup plug (5).
   ★ When using an analog oil pressure gauge, use one of 5.9 MPa {60 kg/cm²}.

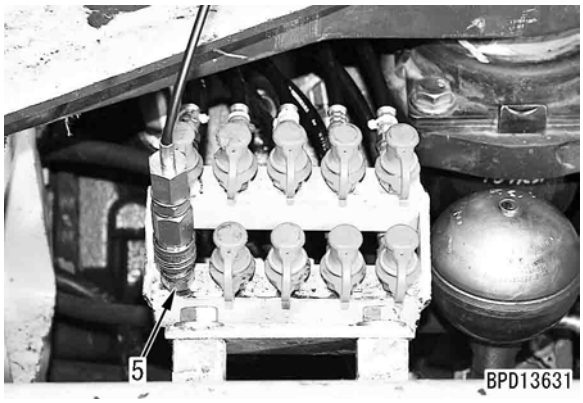

2) Start the engine and set the parking brake lever in the FREE position.
3) Set the gearshift mode and preset range as follows with the gearshift mode selector switch and shiftup or shiftdown switch.
   - Gearshift mode: Manual gearshift (Ripping)
   - Preset range: F2-R2
4) While pressing the brake pedal, set the direction of PCCS lever in the reverse position and shift up the gear to the 3rd gear speed with the shiftup switch.
   - Keep the steering system in neutral.
   - Check that [R3] is displayed in the gear speed display section.
5) While running the engine at high idle, measure the reverse clutch pressure.

   ⚠ **Since the torque converter is stalled, keep pressing the brake pedal securely and keep your right foot on the decelerator pedal for safety until the work is finished.**

6) After finishing measurement, remove the measuring instruments and return the removed parts.

6. Measuring transmission 1st clutch pressure (1ST)

1) Connect oil pressure gauge [1] of hydraulic tester **M** to oil pressure pickup plug (6).
   ★ When using an analog oil pressure gauge, use one of 5.9 MPa {60 kg/cm²}.

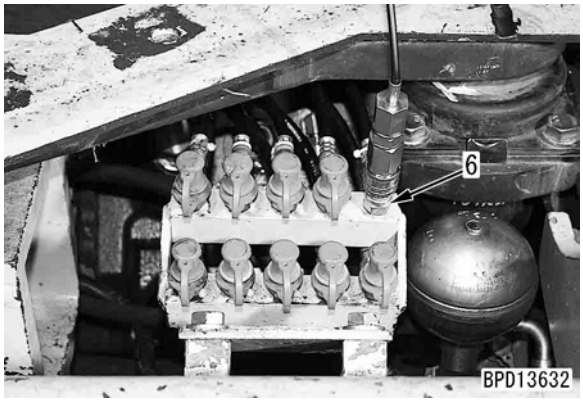

2) Start the engine and set the parking brake lever in the FREE position.
3) Set the gearshift mode and preset range as follows with the gearshift mode selector switch and shiftup or shiftdown switch.
   - Gearshift mode: Manual gearshift (Ripping)
   - Preset range: F1-R1
4) While pressing the brake pedal, set the direction of PCCS lever in the forward position.
   ★ Keep the steering system in neutral.
   ★ Check that [F1] is displayed in the gear speed display section.
5) While running the engine at low idle, measure the 1st clutch pressure.

⚠ Since the torque converter is stalled, keep pressing the brake pedal securely and keep your right foot on the decelerator pedal for safety until the work is finished.

⚠ Do not increase the engine speed to high idle during measurement.

6) After finishing measurement, remove the measuring instruments and return the removed parts.

7. Measuring transmission 2nd clutch pressure (2ND)

1) Connect oil pressure gauge [1] of hydraulic tester **M** to oil pressure pickup plug (7).
   ★ When using an analog oil pressure gauge, use one of 5.9 MPa {60 kg/cm²}.

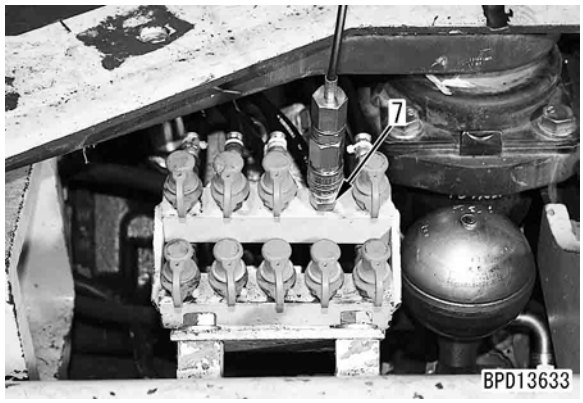

2) Start the engine and set the parking brake lever in the FREE position.
3) Set the gearshift mode and preset range as follows with the gearshift mode selector switch and shiftup or shiftdown switch.
   - Gearshift mode: Manual gearshift (Ripping)
   - Preset range: F2-R2
4) While pressing the brake pedal, set the direction of PCCS lever in the forward position.

★ Keep the steering system in neutral.
★ Check that [F2] is displayed in the gear speed display section.

5) While running the engine at low idle, measure the 2nd clutch pressure.

⚠ Since the torque converter is stalled, keep pressing the brake pedal securely and keep your right foot on the decelerator pedal for safety until the work is finished.
⚠ Do not increase the engine speed to high idle during measurement.

6) After finishing measurement, remove the measuring instruments and return the removed parts.

8. Measuring transmission 3rd clutch pressure (3RD)

1) Connect oil pressure gauge [1] of hydraulic tester **M** to oil pressure pickup plug (8).
★ When using an analog oil pressure gauge, use one of 5.9 MPa {60 kg/cm²}.

2) Start the engine and set the parking brake lever in the FREE position.
3) Set the gearshift mode and preset range as follows with the gearshift mode selector switch and shiftup or shiftdown switch.
● Gearshift mode:

Manual gearshift (Ripping)
● Preset range: F2-R2

4) While pressing the brake pedal, set the direction of PCCS lever in the forward position and shift up the gear to the 3rd gear speed with the shiftup switch.
★ Keep the steering system in neutral.
★ Check that [F3] is displayed in the gear speed display section.

5) While running the engine at low idle, measure the 3rd clutch pressure.

⚠ Since the torque converter is stalled, keep pressing the brake pedal securely and keep your right foot on the decelerator pedal for safety until the work is finished.
⚠ Do not increase the engine speed to high idle during measurement.

6) After finishing measurement, remove the measuring instruments and return the removed parts.

9. Measuring steering right brake pressure (RB)

1) Connect oil pressure gauge [1] of hydraulic tester **M** to oil pressure pickup plug (9).
   ★ When using an analog oil pressure gauge, use one of 5.9 MPa {60 kg/cm²}.

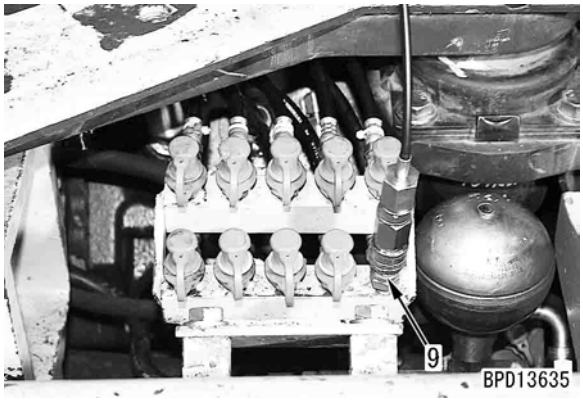

2) Start the engine and set the parking brake lever in the FREE position.
3) While running the engine at low idle and high idle, measure the right brake pressure.
   ★ During measurement, check that the oil pressure lowers to 0 when the brake pedal is pressed or the parking brake lever is set in the LOCK position.

4) After finishing measurement, remove the measuring instruments and return the removed parts.

10. Measuring steering left brake pressure (LB)

1) Connect oil pressure gauge [1] of hydraulic tester **M** to oil pressure pickup plug (10).
   ★ When using an analog oil pressure gauge, use one of 5.9 MPa {60 kg/cm²}.

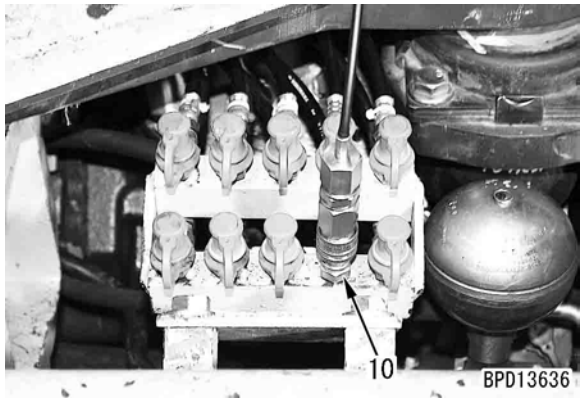

2) Start the engine and set the parking brake lever in the FREE position.
3) While running the engine at low idle and high idle, measure the left brake pressure.
   ★ During measurement, check that the oil pressure lowers to 0 when the brake pedal is pressed or the parking brake lever is set in the LOCK position.

4) After finishing measurement, remove the measuring instruments and return the removed parts.

11. Measuring torque converter inlet pressure and outlet pressure

1) Turn the starting switch ON and set the machine monitor to Monitoring function of the service mode.
   - Monitoring code:
     32601 T/C In Pressure,
     32603 T/C Out Pressure

   ★ For the operating method, see Special functions of machine monitor (EMMS).

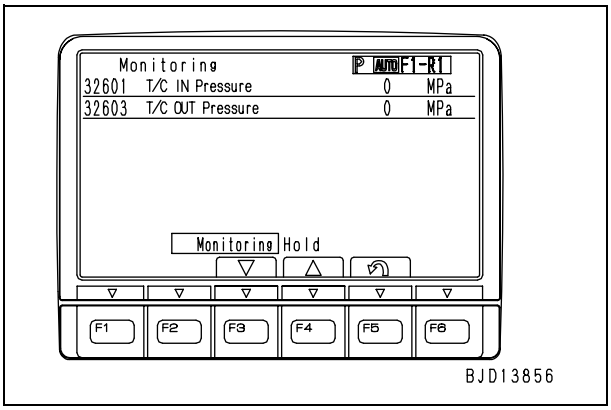

2) Start the engine and set the PCCS lever in the fully neutral position.
   ★ The parking brake lever may be set in the LOCK position.
3) While running the engine at low idle and high idle, measure the inlet pressure and outlet pressure of the torque converter.

Adjusting transmission output shaft speed sensor

⚠ **Stop the machine on level ground, lower the work equipment to the ground, stop the engine, and set the parking brake lever and work equipment lock lever in the LOCK position.**

1. Remove the fuel tank and transmission output shaft speed sensor (1).
   Fuel tank: **950 kg (when full)**
   ★ Before adjusting the transmission output shaft speed sensor, remove it and check that its tip is free from steel chips and flaws, and then reinstall it.

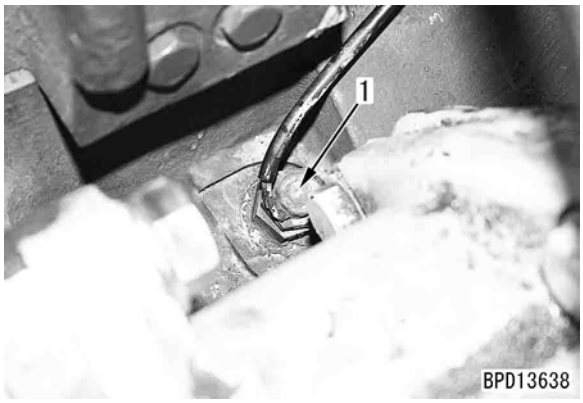

2. Screw in sensor (1) until its tip touches the tooth tip of bevel gear (2).
   Threads: **Gasket sealant (LG-5)**

3. Return sensor (1) by the specified angle.
   ★ Returning angle of sensor: 1/2 – 1 turn
   ★ Adjust clearance (a) between the sensor tip and gear tooth tip to 0.75 – 1.5 mm.

4. While fixing sensor (1), tighten nut (3).
   Nut: **49.0 – 68.6 Nm {5 – 7 kgm}**

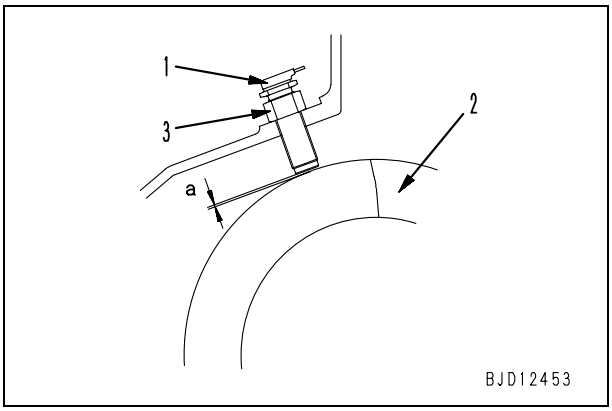

5. After finishing adjustment, return the removed parts.

6. Start the engine, set the machine monitor to Monitoring function of the service mode, and check that the transmission speed is indicated normally.
   ★ Monitoring code: **31400 T/M Out Speed**
   ★ For the operating method, see Special functions of machine monitor (EMMS).
   ★ To rotate the transmission output shaft, drive the machine actually or run the track idle.

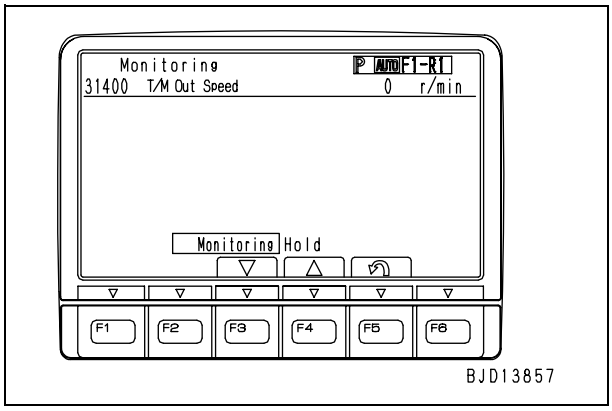

Simple test procedure for brake performance

⚠ **Stop the machine on level ground, lower the work equipment to the ground, stop the engine, and set the parking brake lever and work equipment lock lever in the LOCK position.**

★ Carry out the simple performance test of the brake under the following condition.
- Power train oil temperature: Within operating range

1. Set the blade and ripper in the travel position on a level place.

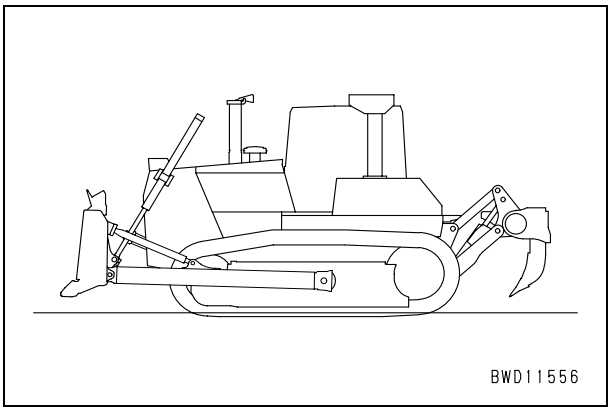

2. Run the engine and set the parking brake lever in the FREE position.

3. Set the gearshift mode and preset range as follows with the gearshift mode selector switch and shiftup or shiftdown switch.
   - Gearshift mode: Manual gearshift (Ripping)
   - Preset range: F2-R2

4. While pressing the brake pedal, set the direction of PCCS lever in the forward position.
   ⚠ **If this test is carried out in the 1st gear position, the brake will be overloaded. Accordingly, be sure to carry out in the 2nd gear speed.**
   ★ Check that [F2] is displayed in the gear speed display section.
   ★ Keep the steering system in neutral.

5. Press the decelerator pedal and set the fuel control dial in the high idle (MAX) position.

6. Return the decelerator pedal slowly and check that the machine does not start when the engine speed reaches the high idle speed.
   ⚠ **Since the torque converter is stalled, keep pressing the brake pedal securely and keep your right foot on the decelerator pedal for safety until the work is finished.**

Adjusting brake pedal

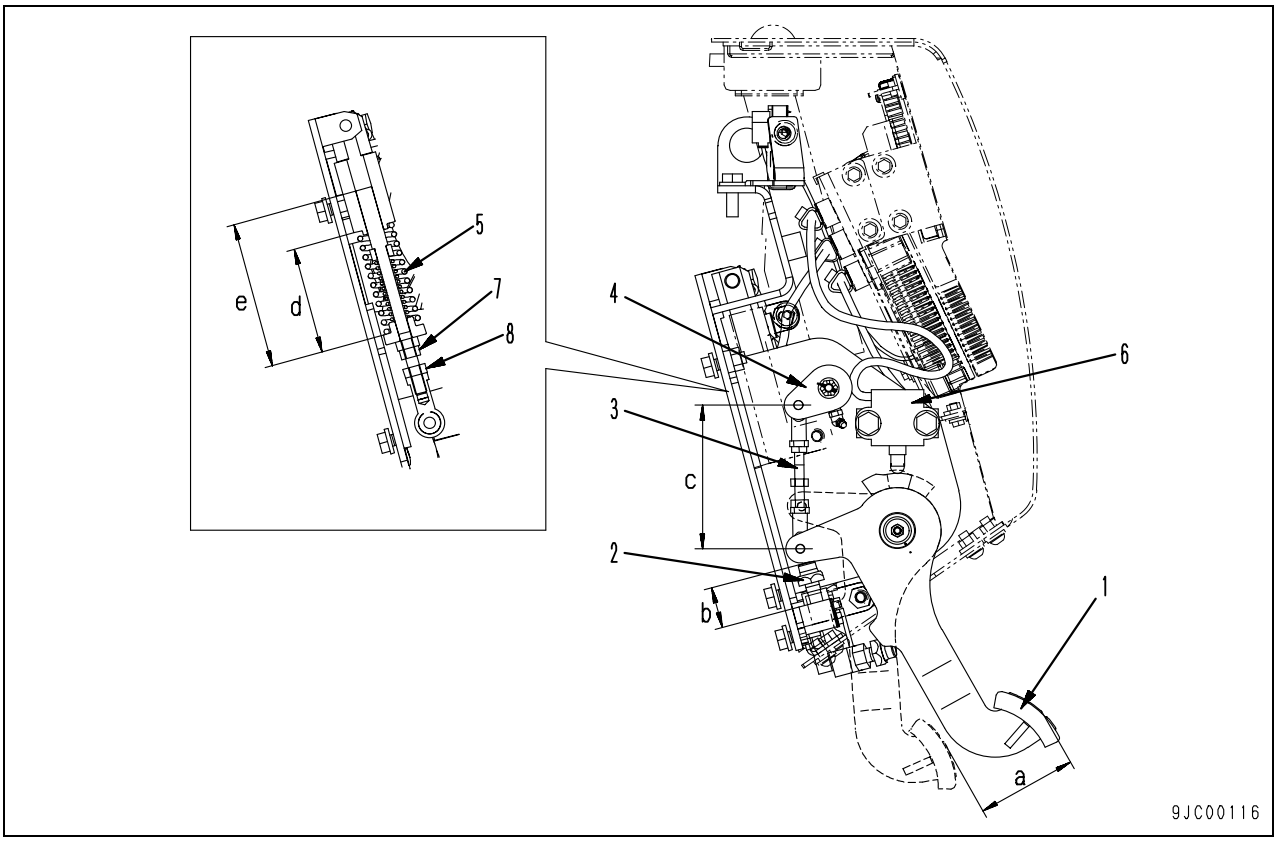

★ Adjusting tool for brake pedal

Symbol	Part No.	Part name
N	79A-264-0091	Push-pull scale

⚠ **Stop the machine on level ground, lower the work equipment to the ground, stop the engine, and set the parking brake lever and work equipment lock lever in the LOCK position.**

★ **Tighten the locknut of the rod securely and bend the cotter pin securely.**

★ When adjusting the brake pedal, remove the left cover of the dashboard and left foot rest as a unit.

1. Adjusting brake potentiometer

1) Turn the starting switch ON and set the machine monitor to Adjusting function of the service mode.
   - ★ Adjustment code: **0005** (Brake pedal potentiometer initial correction)
   - ★ For the operating method, see "Special functions of machine monitor (EMMS)".

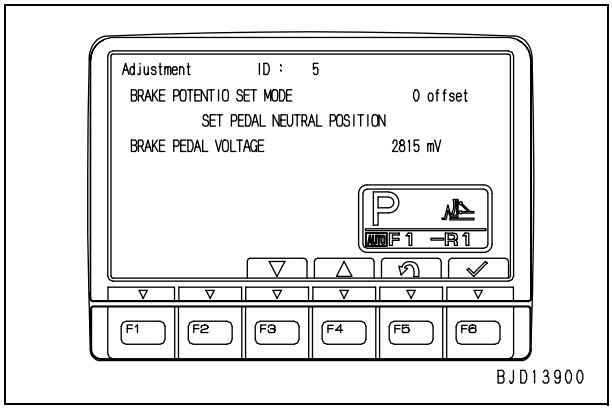

2) Adjust installed dimension (b) of stopper (2) so that dimension (a) will be 80 mm.
   - Dimension (b) = 35.5 mm (Reference value)
3) Adjust installed dimension (b) of stopper (2) so that the brake pedal potentiometer voltage will be the specified voltage when brake pedal (1) is released.
   - Brake pedal voltage: 2,500 ± 50 mV
4) Referring to "Special functions of machine monitor (EMMS), Service mode 07, Adjustment (Adjustment ID: **0005**)", perform initial correction of the brake pedal potentiometer.

2. Adjusting brake pedal pressing effort

★ While brake pedal (1) is released, adjust installed dimension (d) of return spring (5).

1) Loosen nut (8).
2) Turn double nut (7) to adjust the brake pedal pressing effort.
   ★ Turn the 2 nuts together. Do not loosen them from each other.
   - Adjustment dimension (d) of rod (Installed dimension of return spring): 92 ± 0.5 mm
   - Assembly dimension (e) of rod: 127 mm

3. Adjusting brake limit switch

1) Press brake pedal (1). When the brake pedal potentiometer voltage is in the following range, fix the brake pedal.
   - Brake pedal voltage: 3,940 – 4,150 mV
2) Adjust the installed position of brake limit switch (6) so that it will be turned ON at this position.
   - Backup brake active Sw ON
3) After adjusting, return the brake pedal slowly and check that brake limit switch (6) is turned OFF in the voltage range shown in 1).
   - Backup brake active Sw OFF

4. Measuring brake pedal pressing force

1) Operate the brake pedal with the foot and check that it moves smoothly.
2) Using push-pull scale **N**, measure the pressing force to start operation of the brake.
   - Pressing force to start operation: 49 N {5 kg}
3) Using push-pull scale N, measure the pressing force at the stroke end of the brake pedal.
   - Pressing force at stroke end: 461 N {47 kg}

5. Work after finishing adjustment

After finishing adjustment, return the removed parts.

Adjusting parking brake lever

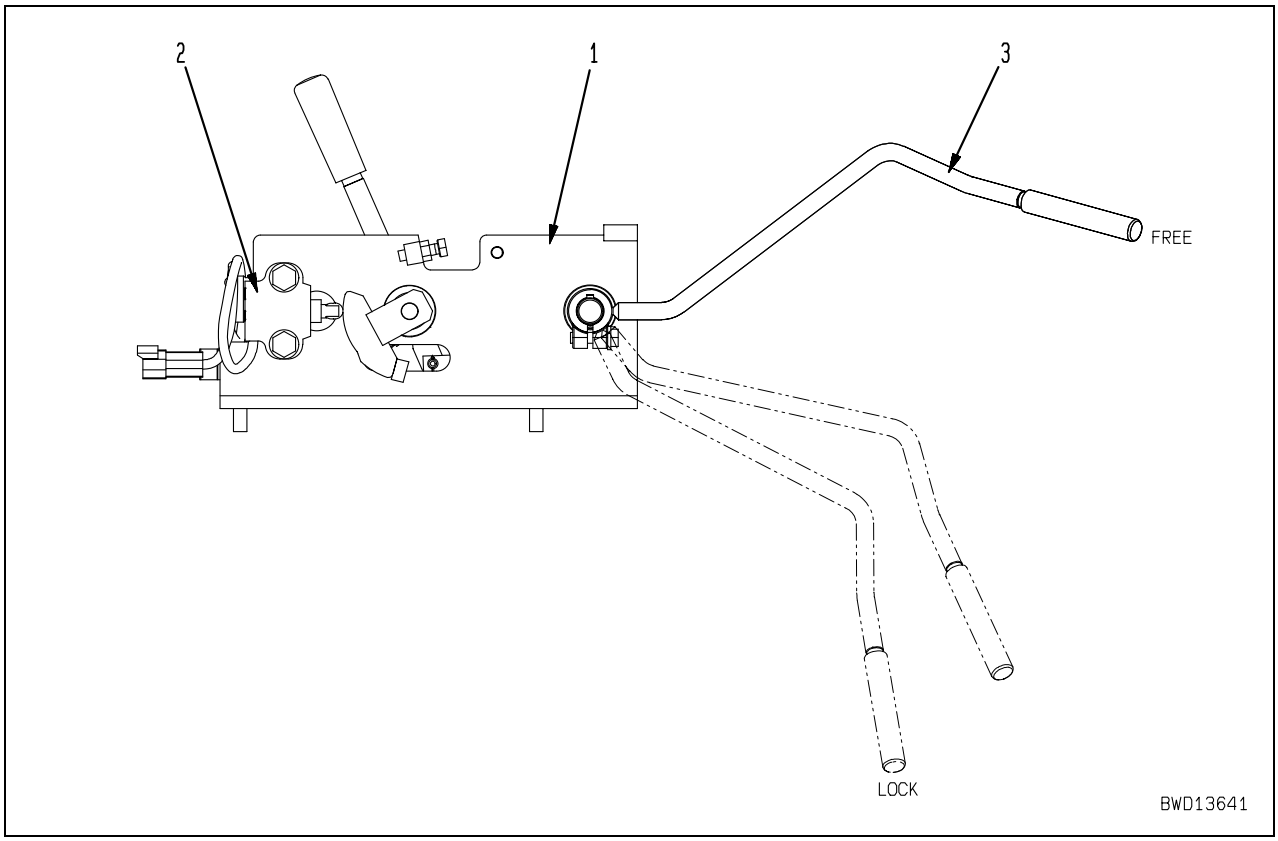

⚠ **Stop the machine on level ground, lower the work equipment to the ground, stop the engine, and set the parking brake lever and work equipment lock lever in the LOCK position.**

★ **Tighten the locknut of the rod securely and bend the cotter pin securely.**

★ When adjusting the parking brake lever, remove the battery cover.

Battery cover: **65 kg**

1. Assembly and installation of lever assembly

1) Assemble lever assembly (1) and adjust the operation of limit switch (2).
   - Lever raising position: OFF, lowering position: ON
   - Limit switch operation stroke: 2.8 mm
2) Install lever assembly (1).

2. Checking brake oil pressure

Run the engine and check that the brake oil pressure is as follows when parking brake lever (3) is set in the FREE position and LOCK position.

★ For the method of measuring the brake oil pressure, see Measuring power train oil pressure.

- Brake oil pressure (At high idle)

Parking brake lever	Oil pressure
FREE position	2.75 ± 0.29 MPa {28.0 ± 3.0 kg/cm²}
LOCK position	0 MPa {0 kg/cm²}

3. Checking limit switch

1) Turn the starting switch ON and set the machine monitor to Monitoring function of the service mode.
   - ★ Monitoring code:
     40905 T/M Sw Input 1
   - ★ For the operating method, see "Special functions of machine monitor (EMMS)".

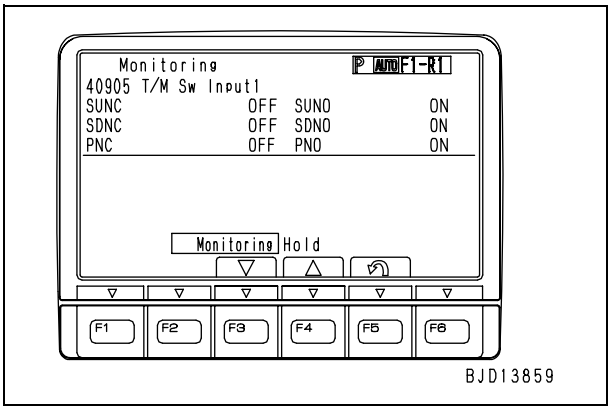

2) Check that the limit switch signal is input normally when parking brake lever (3) is set in the FREE position and LOCK position.
   - FREE position:
     Travel lock NC OFF, Travel lock NO ON
   - LOCK position:
     Travel lock NC ON, Travel lock NO OFF

Emergency escape method when power train has trouble

★ Tools for emergency escape

Symbol		Part No.	Part name
P	1	19M-06-32820	Switch assembly
		17A-06-41410	Wiring harness
	2	790-190-1601	Pump assembly

1. Emergency escape method with switch box (Using P1)

★ If the machine cannot be moved because of a trouble in the electric system of the power train control unit (travel direction, gear speed, steering), escape according to the following procedure.

★ The engine must be startable for the following procedure.

★ If the engine cannot be started, see Emergency escape method with brake releasing device (Using P2).

⚠ **Do not turn the starting switch ON or start the engine before preparing the switch assembly and wiring harness P1 completely.**

1) Connect wiring harness [2] to switch assembly [1] of emergency escape device **P1**.

⚠ **Set the all gear speed switches of switch assembly [1] in the OFF position and set the directional switch in the P position to prevent the machine from starting suddenly.**

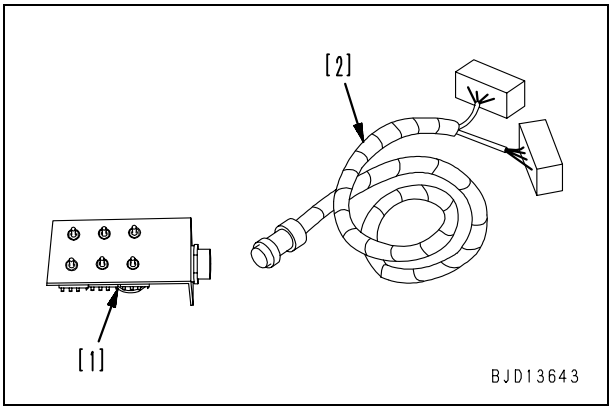

2) Open the left fender inspection cover and connect wiring harness [2] to connector **PL1** (1).

★ The male housing and female housing of connector **PL1** are fixed with screws.

★ Connect the wiring harness to both male side and female side of connector **PL1**.

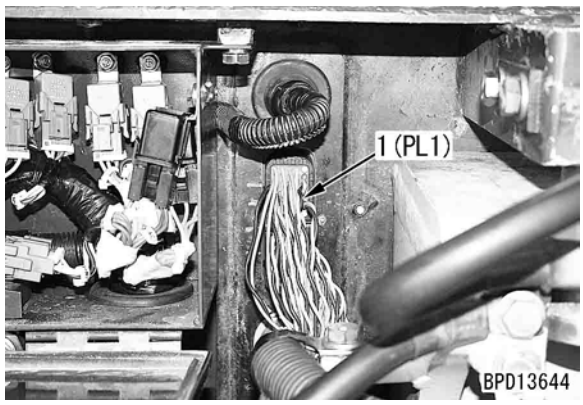

3) Disconnect neutral safety relay **NSF** (2) and connect pins No. 3 and No. 5 of the connector on the wiring harness side.

★ Direct coupling circuit: **NSF** (female) No. 3 ⟷ No. 5

★ If connector **PL1** is disconnected, a model selection error is made and neutral safety relay **NSF** is not driven. The above operation is performed to prevent this.

⚠ **If the engine is started by this method, the neutral safety function does not work. Accordingly, before starting the engine, set the parking brake lever in the LOCK position and set the PCCS lever in the fully neutral position.**

⚠ **Start the engine by this method only in an emergency. If the engine does not start in another case, be sure to carry out troubleshooting and repair the trouble.**

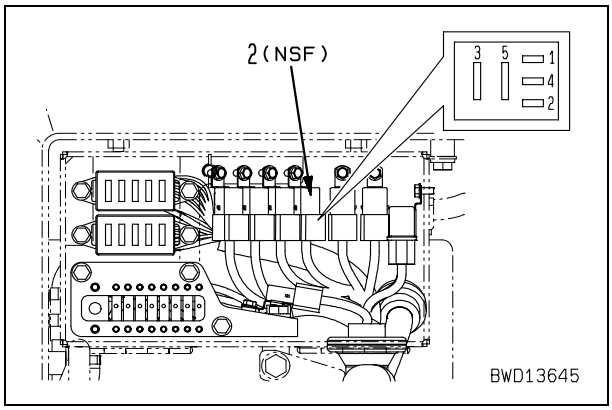

4) Start the engine and set the parking brake lever in the FREE position.
5) Operate switch assembly [1] and move the machine to a safe place.
   ★ The gear speed switch is so made that the switch on the lower gear speed will be operated first.

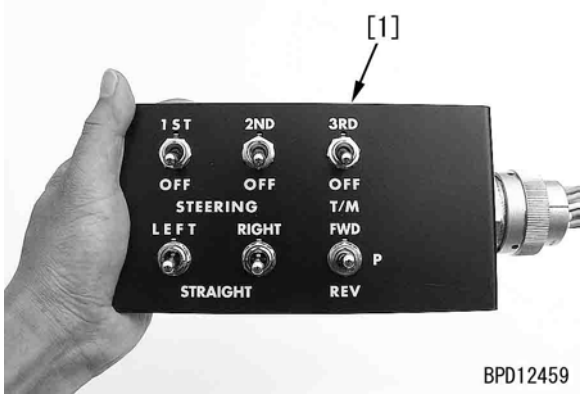

6) After moving the machine, remove the instruments used and return the removed parts.
   ★ Check that the seal at the joint of connector **PL1** is not projected or removed and then tighten the screws to the specified torque.
   Screw of connector **PL1**:
   2.83 ± 0.28 Nm {0.288 ± 0.028 kgm}

2. Escape method with brake releasing device (Using P2)
★ If the engine cannot be started and the parking brake cannot be released, escape according to the following procedure.
1) Assemble pump assembly **P2**.

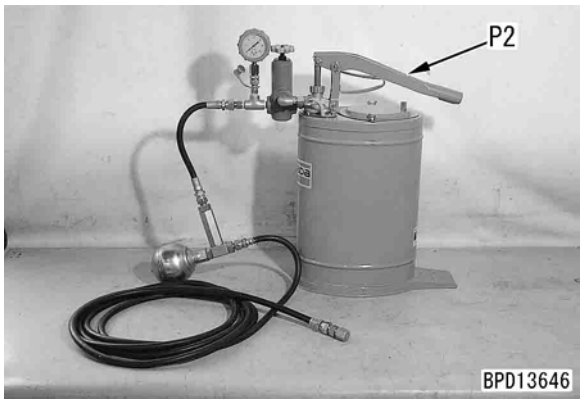

2) Install volume pump [3] of pump assembly **P2** to the outside of the operator's cab.

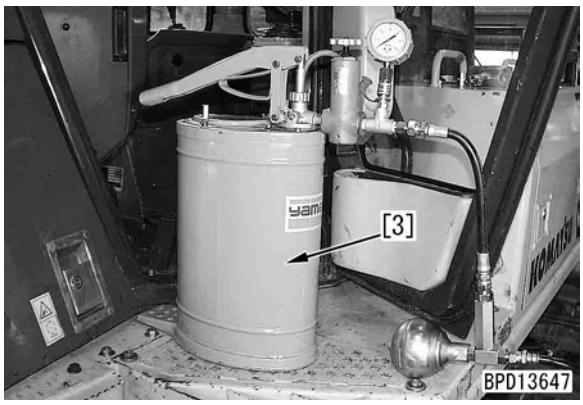

3) Remove the fuel tank undercover and disconnect supply hose (3) of the pin puller solenoid valve.

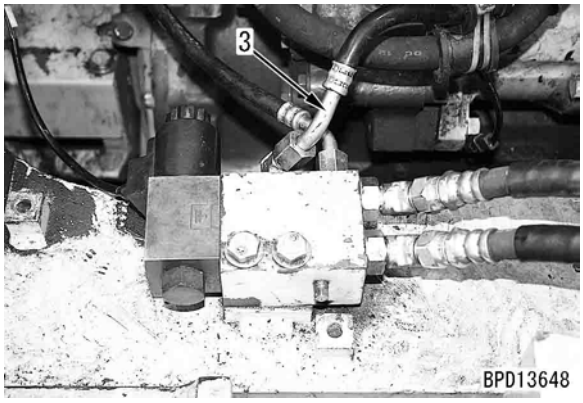

4) Connect end hose [4] of pump assembly **P2** to the hose side.
   ★ Since the hose on the machine side is face seal type, use a nipple of face seal type on the pump assembly **P2** side.
   ★ Stop the solenoid valve side with a cap nut, etc.
   Cap nut: 02789-00315

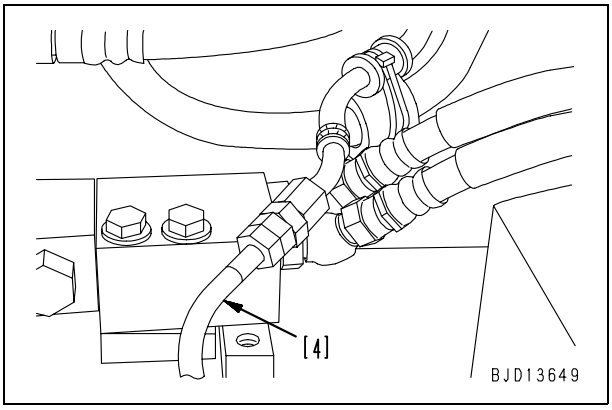

5) Turn the starting switch ON and set the parking brake lever in the FREE position.

6) Operate the volume pump to raise the brake releasing oil pressure to the initial pressure.
   - Initial pressure: **Approx. 2.74 MPa {Approx. 28 kg/cm²}**
   - ★ Since the accumulator is installed in the circuit, the handle must be operated 30 – 50 times to raise the oil pressure.
   - ★ If the oil pressure does not rise above a certain level, the relief valve may be set to low pressure. In this case, adjust the set pressure of the relief valve.
7) Tow the machine to a safe place.
   - ★ The brake releasing oil pressure lowers gradually because of internal leakage and the brake is applied again in about 1 minute. Accordingly, work quickly.
   - ★ If the brake releasing pressure lowers to about 1.57 MPa {about 16 kg/cm²}, the brake is applied. In this case, operate the volume pump again to raise the brake releasing pressure to the initial pressure.

Adjusting idler clearance

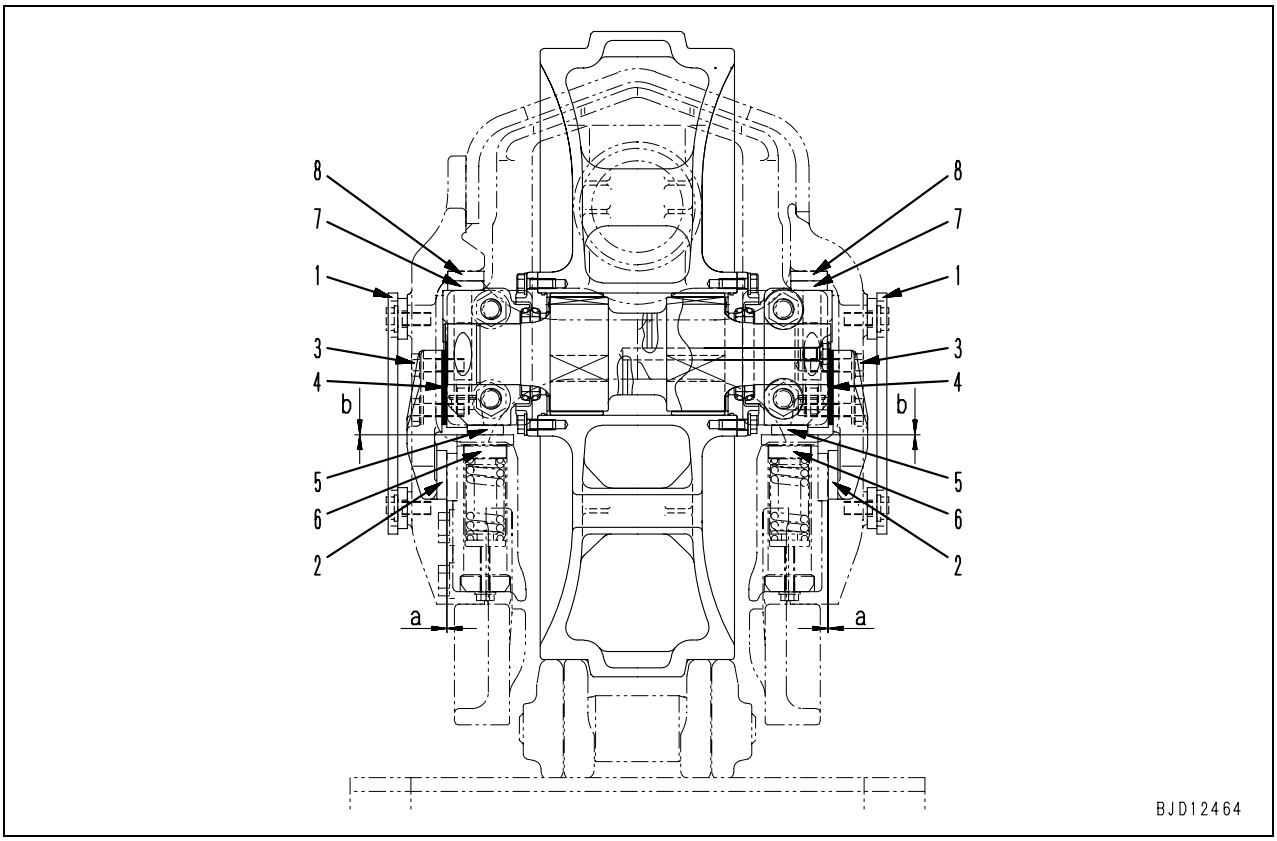

★ If the idler runs out or tilts because of wear of the right and left side guide plates or upper and lower guide plates, and guide plate, adjust according to the following procedure.

⚠ **Stop the machine on level ground, lower the work equipment to the ground, stop the engine, and set the parking brake lever and work equipment lock lever in the LOCK position.**

1. Adjusting in lateral direction

1) Drive the machine for 1 – 2 m on a level place, then remove 2 covers (1).
2) Measure clearance (a) between the track frame and right and left guide plates (2) at 2 places.
3) If clearance (a) is more than 4 mm, remove bolt (3) and reduce shims (4).
   - Standard clearance (a) on each side: 0.5 – 1.0 mm
   - ★ Do not loosen the bolt more than 3 turns.
   - ★ This part can be adjusted to 6 mm on each side.
4) After finishing measurement, return the removed parts.

2. Adjusting in vertical direction

1) Measure clearance (b) between guide plates (5) and (6) at 2 places.
2) The idler cannot be adjusted vertically. If clearance (b) is more than 8 mm, replace the upper and lower guide plates (5), (6), (7) and (8) with new ones.
   - ★ Guide plates (5), (7) and (8) are welded.
3) After finishing measurement, return the removed parts.

Testing and adjusting track shoe tension

⚠ Stop the machine on level ground, lower the work equipment to the ground, stop the engine, and set the parking brake lever and work equipment lock lever in the LOCK position.

Testing

1. Drive the machine slowly on a level place, then stop it.
   ★ Do not apply the brake when stopping.

2. Place straight steel bar (1) between the idler and front carrier roller and measure maximum clearance (a) between the bottom of the steel bar and shoe grouser.
   ★ For the above measurement, use an L-shaped steel which will be deflected less.
   ● Standard max. clearance (a): 20 – 30 mm

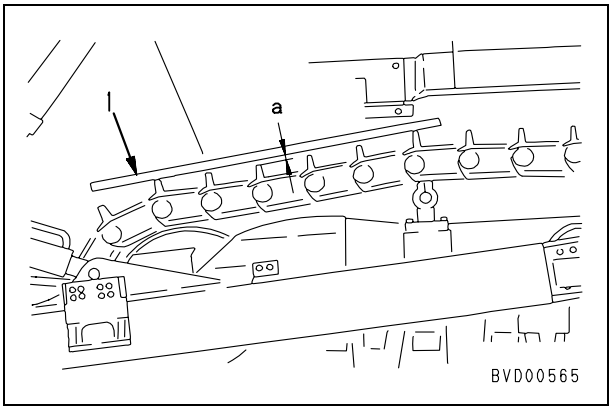

Adjusting

★ If the track shoe tension is abnormal, adjust it according to the following procedure.

1. Remove cover (2).

2. When the tension is too high
   Loosen plug (3) to discharge the grease.
   ⚠ Since the high-pressure grease may spout out, do not loosen the plug more than 1 turn.
   Plug: **59 – 88 Nm {6 – 9 kgm}**

3. When tension is low
   Add grease through grease fitting (4).
   ★ If the track shoe is not tensed well, drive the machine forward and in reverse slowly.

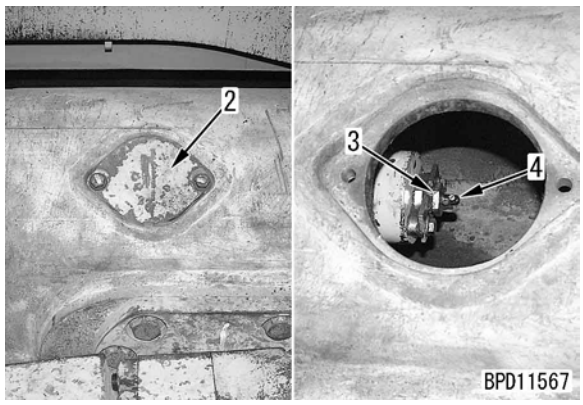

4. After finishing adjustment, return the removed parts.

Measuring and adjusting work equipment and HSS oil pressure

★ Measuring and adjusting instruments for work equipment and HSS oil pressure

Symbol		Part No.	Part name
Q	1	799-101-5002	Hydraulic tester
		790-261-1204	Digital hydraulic tester
	2	799-101-5220	Nipple (10 x 1.25 mm)
		07002-11023	O-ring

⚠ **Stop the machine on level ground, lower the work equipment to the ground, stop the engine, and set the parking brake lever and work equipment lock lever in the LOCK position.**

★ When measuring and adjusting the work equipment and HSS oil pressure, remove the control valve cover.

Control valve cover: **25 kg**

Measuring

★ Measure the work equipment and HSS oil pressure under the following condition.
- Hydraulic oil temperature: Within operating range

★ The unload pressure, work equipment oil pressure, and HSS oil pressure can be checked with the monitoring function of the service mode of the machine monitor (See 4).

1. Measuring unload pressure

1) Remove P oil pressure pickup plug (1) from the control valve.

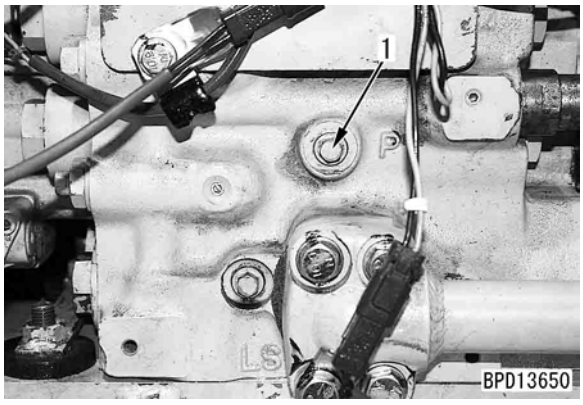

2) Install nipple **Q2** and connect it to oil pressure gauge [1] of hydraulic tester **Q1**.
★ When using an analog oil pressure gauge, use one of 5.9 MPa {60 kg/cm²}.

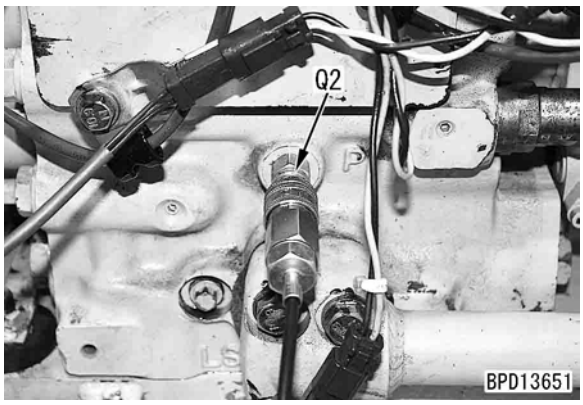

3) Run the engine at high idle and set the blade control lever and ripper control lever in neutral and measure the unload pressure.
★ The work equipment lock lever may be set in the LOCK position.
⚠ **Do not operate the work equipment or steer the machine with the oil pressure gauge of 5.9 MPa {60 kg/cm²} installed. If you do so, the oil pressure gauge will be broken.**

4) After finishing measurement, remove the measuring instrument and return the removed parts.

2. Measuring work equipment oil pressure

1) Remove P oil pressure pickup plug (1) and LS oil pressure pickup plug (2) from the control valve.

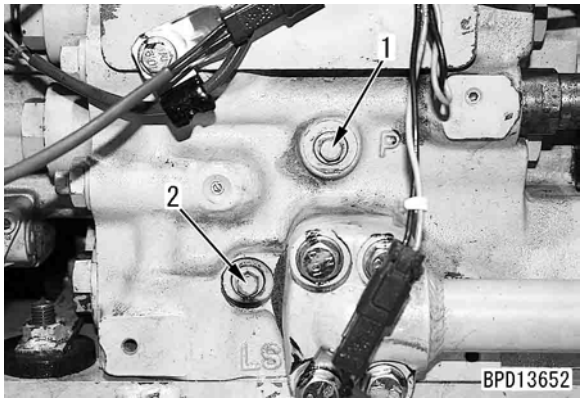

2) Install nipples **Q2** and connect them to oil pressure gauges [1] of hydraulic tester **Q1**.
   ★ When using analog oil pressure gauges, use ones of 39.2 MPa {400 kg/cm²}.

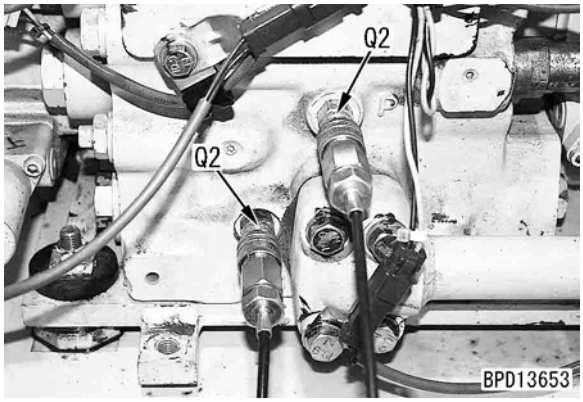

3) Start the engine and set the work equipment lock lever in the FREE position.
4) Run the engine at high idle, operate the blade control lever and ripper control lever to relieve each cylinder at a stroke end, and measure the work equipment relief pressure and work equipment LS relief pressure.
   ★ The work equipment relief pressure is measured on the P-stamp side and the work equipment LS relief pressure is measured on the LS-stamp side.
   ⚠ **Do not steer the machine with the oil pressure gauge of 39.2 MPa {400 kg/cm²} installed. If you do so, the oil pressure gauge will be broken.**

5) After finishing measurement, remove the measuring instrument and return the removed parts.

3. Measuring HSS oil pressure
1) Install the measuring instruments to the control valve.
   ★ Measuring points of the HSS oil pressure are the same as those of the work equipment oil pressure.
   ★ When using analog oil pressure gauges, use ones of 58.8 MPa {600 kg/cm²}.

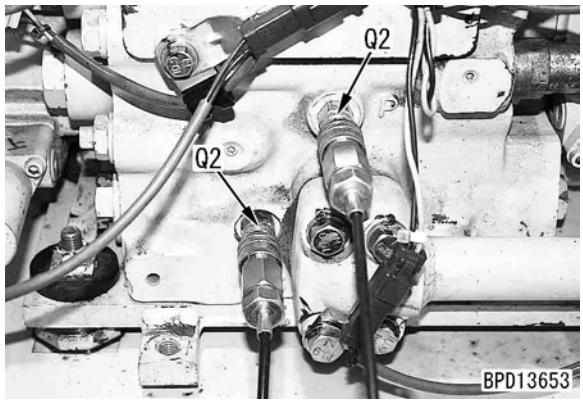

2) Start the engine, set the parking brake lever in the FREE position, and keep pressing the brake pedal.
3) Run the engine at high idle, set the PCCS lever in the right or left steering position to relief the steering circuit, and measure the HSS relief pressure and HSS LS relief pressure.
   ⚠ **Since the steering circuit is relieved, keep pressing the brake pedal securely and keep your right foot on the decelerator pedal for safety until the work is finished.**
   ★ The HSS relief pressure is measured on the P-stamp side and the HSS LS relief pressure is measured on the LS-stamp side.

4) After finishing measurement, remove the measuring instruments and return the removed parts.

4. Measuring with machine monitor

1) Turn the starting switch ON and set the machine monitor to Monitoring function of the service mode.
   - Monitoring code:
     70700 Hydraulic Pump Pressure 1
   - ★ For the operating method, see Special functions of machine monitor (EMMS).

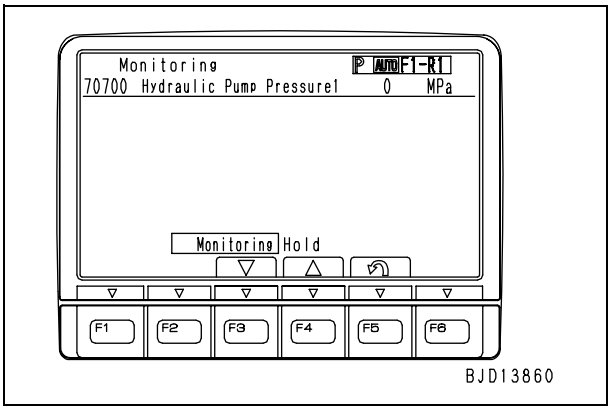

2) Start the engine and measure each oil pressure.
   - ★ The measuring condition of each oil pressure is the same with 1 – 3 above.
   - ★ Only the oil pressures on the P-stamp side (unload pressure, work equipment relief pressure, and HSS relief pressure) can be measured with the monitoring function. The oil pressures on the LS-stamp side (work equipment LS relief pressure and HSS LS relief pressure) cannot be measured.

Adjusting

1. Adjusting unload pressure

- ★ The unload pressure cannot be adjusted.

2. Adjusting work equipment oil pressure

- ★ If the work equipment oil pressure is abnormal, adjust it with work equipment LS relief valve (3) according to the following procedure.
- ★ The 5-spool valve of the single tilt specification is shown in the figure (The dual tilt machine has the 6-spool valve).

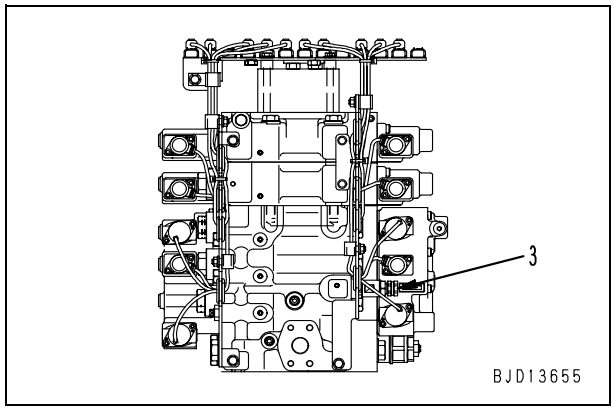

1) While fixing adjustment nut (4), loosen locknut (5).
2) Adjust the pressure by rotating adjustment nut (4).
   - ★ If the adjustment nut is
     - rotated to the right, the pressure is heightened.
     - rotated to the left, the pressure is lowered.
   - ★ Quantity of adjustment per turn of adjustment nut: Approx. 19.6 MPa {Approx. 200 kg/cm²}
3) While fixing adjustment nut (4), tighten locknut (5).
   Locknut: **39 – 49 Nm {4 – 5 kgm}**

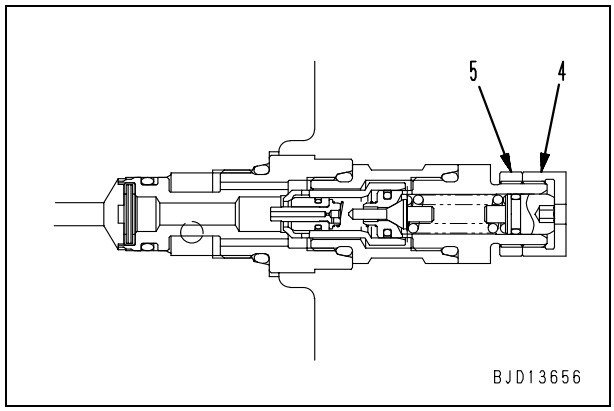

4) After finishing measurement, check the work equipment oil pressure according to the above measuring method.

3. Adjusting HSS oil pressure

★ If the HSS oil pressure is abnormal, adjust it with HSS LS relief valve (6) according to the following procedure.

★ The 5-spool valve of the single tilt specification is shown in the figure (The dual tilt machine has the 6-spool valve).

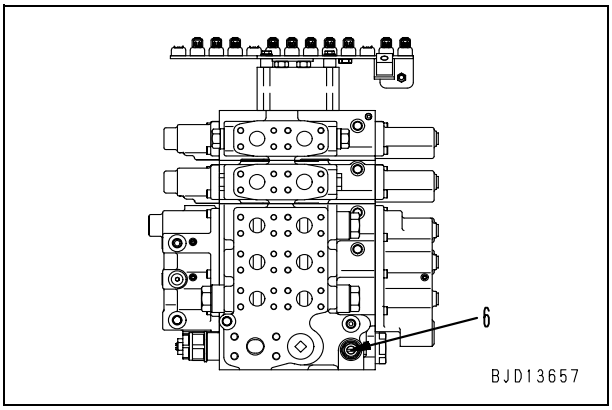

1) While fixing adjustment screw (7), loosen locknut (8).
2) Adjust the pressure by rotating adjustment screw (7).
   ★ If the adjustment screw is
   - rotated to the right, the pressure is heightened.
   - rotated to the left, the pressure is lowered.

   ★ Quantity of adjustment per turn of adjustment screw:
   Approx. 15.1 MPa
   {Approx. 154 kg/cm²}
3) While fixing adjustment screw (7), tighten locknut (8).
   Locknut:
   68.6 – 78.5 Nm {7 – 8 kgm}

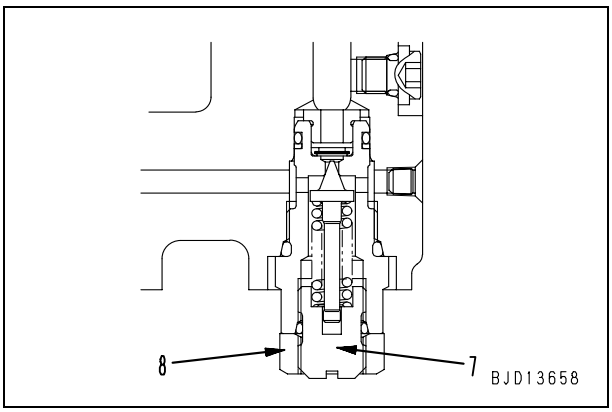

4) After finishing measurement, check the HSS oil pressure according to the above measuring method.

Measuring control circuit basic pressure

★ Measuring instruments for control circuit basic pressure

Symbol		Part No.	Part name
R	1	799-101-5002	Hydraulic tester
		709-261-1204	Digital hydraulic tester
	2	799-401-3200	Adapter (03)

★ The control circuit basic pressure is the pressure lowered by the self-pressure reducing valve of the fan circuit. It is used commonly for the EPC valves of the control valve (steering, blade, and ripper), HSS circuit charge, fan pump control, and blade lift cylinder quick drop EPC valve.

⚠ **Stop the machine on level ground, lower the work equipment to the ground, stop the engine, and set the parking brake lever and work equipment lock lever in the LOCK position.**

★ Measure the control circuit basic pressure under the following condition.
- Hydraulic oil temperature: Within operating range

1. Remove the control valve cover and disconnect accumulator inlet hose (1).

   Control valve cover: **25 kg**

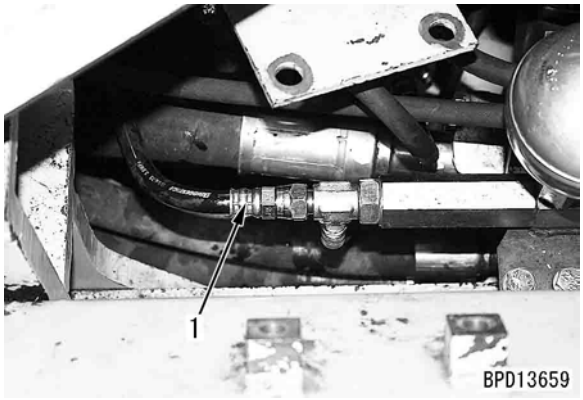

2. Install adapter **R2** and connect the disconnected hose again.

3. Install nipple [1] of hydraulic tester **R1** and connect it to oil pressure gauge [2].
   ★ When using an analog oil pressure gauge, use one of 5.9 MPa {60 kg/cm²}.

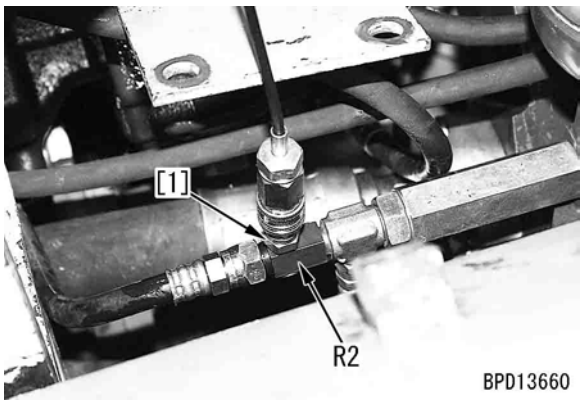

4. Run the engine at high idle, set the blade control lever and ripper control lever in neutral, and measure the control circuit basic pressure.
   ★ The work equipment lock lever may be set in the LOCK position.

5. After finishing measurement, remove the measuring instrument and return the removed parts.

★ The control circuit basic pressure cannot be adjusted.

Measuring work equipment lock solenoid valve output pressure

★ Measuring instruments for work equipment lock solenoid valve output pressure

Symbol		Part No.	Part name
S	1	799-101-5002	Hydraulic tester
		790-261-1204	Digital hydraulic tester
	2	799-401-3200	Adapter (03)

⚠ **Stop the machine on level ground, lower the work equipment to the ground, stop the engine, and set the parking brake lever and work equipment lock lever in the LOCK position.**

★ Measure the work equipment lock solenoid valve output pressure under the following condition.
- Hydraulic oil temperature: Within operating range

1. Remove the control valve cover and disconnect control valve inlet hose (1).
   Control valve cover: **25 kg**

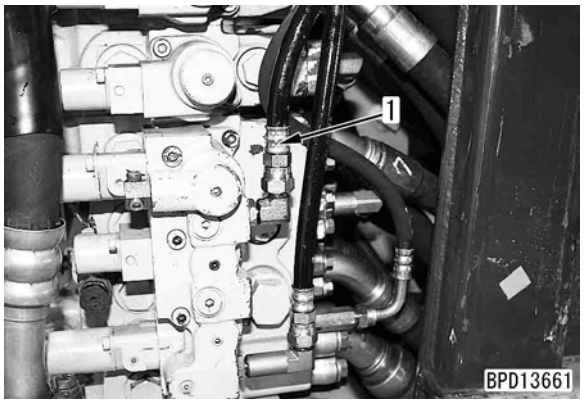

2. Install adapter **S2** and connect the disconnected hose again.

3. Install nipple [1] of hydraulic tester **S1** and connect it oil pressure gauge [2].
   ★ When using an analog oil pressure gauge, use one of 5.9 MPa {60 kg/cm²}.

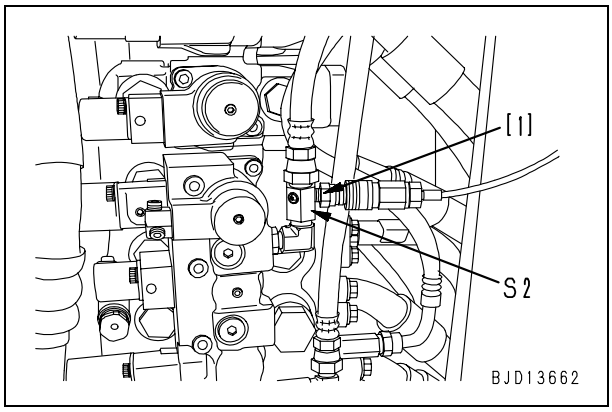

4. Run the engine at high idle, set the work equipment lock lever in the LOCK position and FREE position, and measure the solenoid valve output.
   ★ If the output pressure is as follows, the operation of the work equipment lock solenoid valve is normal.

Work equipment lock lever	Output pressure
LOCK position	0 MPa {0 kg/cm²}
FREE position	Same as control circuit basic pressure (See standard value table)

5. After finishing measurement, remove the measuring instrument and return the removed parts.

Emergency operation method when work equipment has trouble

★ Tools for emergency operation

Symbol	Part No.	Part name
T	17A-06-41421	Wiring harness

★ If the blade or ripper cannot be moved because of a trouble in the work equipment control system, operate it according to the following procedure.

★ The engine must be startable for the following procedure.

⚠ **Do not turn the starting switch ON or start the engine before preparing wiring harness T completely.**

1. Install wiring harness **T** in the operator's cab and check where to connect each connector.
   - **WLK**: To work equipment lock solenoid under floor
   - **WEPW**: To power supply connector above control valve
   - **WEPX**: To EPC solenoid above control valve
   - **WEPY**: To EPC solenoid above control valve

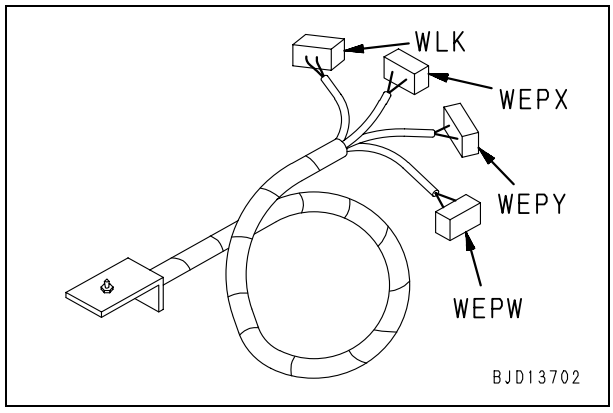

2. Remove the floor cover from the front of the operator's seat.

   Floor cover: **20 kg**

3. Disconnect connector **WLK** of the work equipment lock solenoid valve and connect it to the male side of wiring harness **T**.

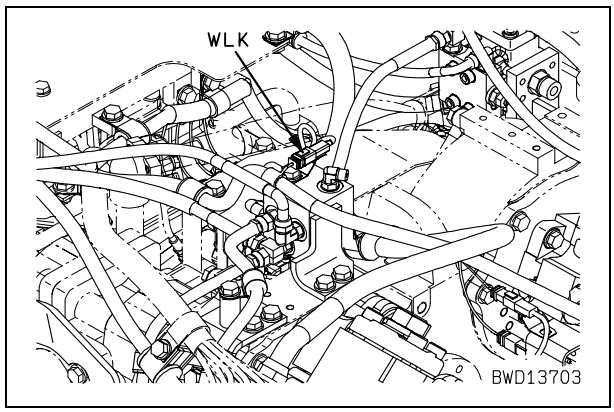

★ Connector on machine side to be connected

Connector on machine side	Connector on wiring harness **T** side
WLK (male)	**WLK**

4. Remove the control valve cover.

   Control valve cover: **25 kg**

5. Remove the plug of power supply connector **WEPW** above the control valve and connect connector **WEPW** of wiring harness **T** to the female side.

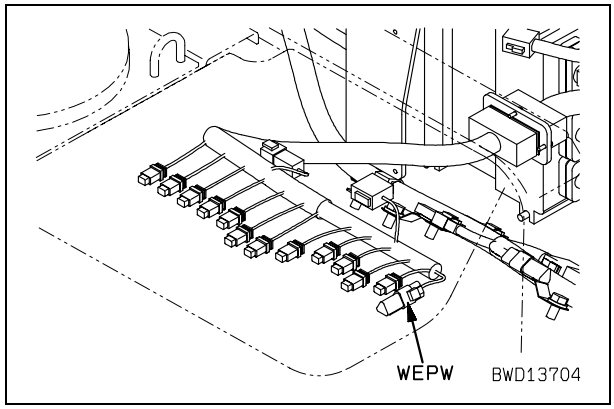

★ Connector to be connected

Connector on machine side	Connector on wiring harness **T** side
WEPW (female)	**WEPW**

6. Disconnect EPC solenoid connectors **EWP1** – **WEPA** above the control valve and connect connectors **WEPX** and **WEPY** of wiring harness T to the male side.
   - ★ Disconnect only the pair (2 pieces) of the connector of the control valve spool (cylinder) to be moved and connect the connectors on the wiring harness **T** side to them respectively.
   - ★ When connecting the connectors, check the operating direction of the switch and the connector numbers again.
   - ⚠ **Do not connect wiring harness T to the HSS connectors (HSL and HSR).**

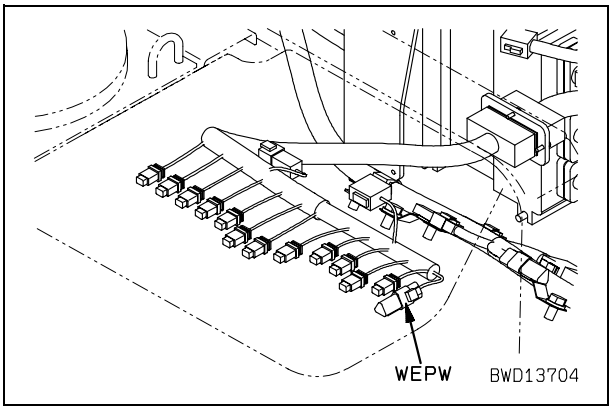

   - ★ Connectors to be connected (The following table is for the dual tilt specification. **WEP5** and **WEP6** are not connected to the single tilt specification.)

Connectors on machine side			
Device/Operating direction		No.	Band color
Blade lift	Raise	**WEP1**	Green
	Lower	**WEP2**	Green/Black
Blade tilt left	Retract	**WEP3**	Brown
	Extend	**WEP4**	Brown/Black
Blade tilt right	Retract	**WEP5**	Blue
	Extend	**WEP6**	Blue/Black
Ripper lift	Raise	**WEP7**	Yellow
	Lower	**WEP8**	Yellow/Black
Ripper tilt	In	**WEP9**	Red
	Back	**WEPA**	Red/Black
Connectors on wiring harness **T** side			
Device/Operating direction		No.	Band color
LIFT	UP	**WEPX**	—
	DOWN	**WEPY**	—

7. Start the engine and operate switch [1] of wiring harness **T** to move the work equipment.
   - ⚠ **Before starting the engine, check that the switch is in neutral.**
   - ⚠ **Since the work equipment cannot be controlled finely with the switch, keep the engine speed as low as possible.**

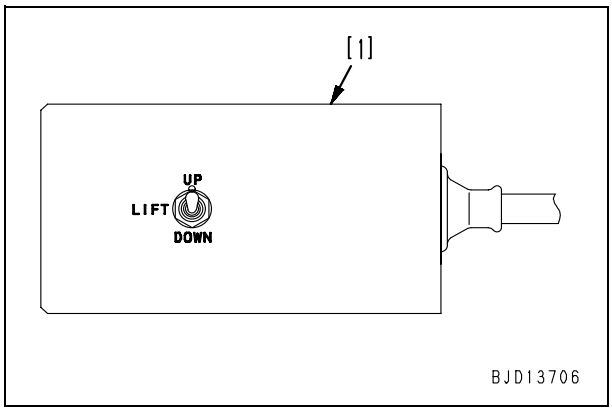

8. After finishing operation of the work equipment, remove the tools used and return the removed parts.

Measuring ripper pin puller solenoid valve output pressure

★ Measuring instruments for ripper pin puller solenoid valve output pressure

Symbol		Part No.	Part name
U	1	799-101-5002	Hydraulic tester
		790-261-1204	Digital hydraulic tester
	2	799-401-3200	Adapter (03)

⚠ **Stop the machine on level ground, lower the work equipment to the ground, stop the engine, and set the parking brake lever and work equipment lock lever in the LOCK position.**

★ Measure the ripper pin puller solenoid valve output pressure under the following condition.
- Power train oil temperature: Within operating range

1. Remove the undercover of the fuel tank and disconnect ripper pin puller solenoid valve hose (1) or (2).
   - Hose (1): Pin puller cylinder head side
   - Hose (2): Pin puller cylinder bottom side

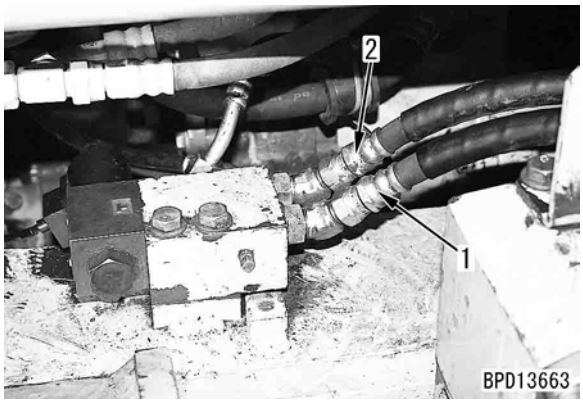

2. Install adapter **U2** and connect the disconnected hose again.

3. Install nipple [1] of hydraulic tester **U1** and connect oil pressure gauge [2].
   ★ When using an analog oil pressure gauge, use one of 5.9 MPa {60 kg/cm²}.

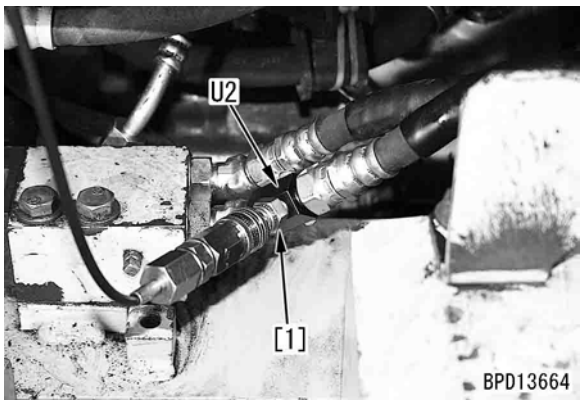

4. Run the engine at high idle, set the pin puller switch in the pull-out position and push-in position, and measure the solenoid valve output pressure at each position.
   ★ If the output pressure is as follows, the operation of the ripper pin puller solenoid valve is normal.

Tested hose	Pin puller switch	Output pressure
(1)	Pull-out	Same as transmission main relief pressure (See standard value table)
	Push-in	0 MPa {0 kg/cm²}
(2)	Pull-out	0 MPa {0 kg/cm²}
	Push-in	Same as transmission main relief pressure (See standard value table)

5. After finishing measurement, remove the measuring instrument and return the removed parts.

Testing parts which cause hydraulic drift of blade and ripper

★ If the blade or ripper drifts hydraulically, check to see if the cause is on the cylinder packing side or control valve side according to the following procedure.

1. Set the cylinders to be tested in the following positions and stop the engine.
   1) Blade lift cylinder
      Brace the blade to raise the front side of the machine body.
      ★ Since the blade lift cylinder is equipped with a piston valve, do not extend it to the stroke end.

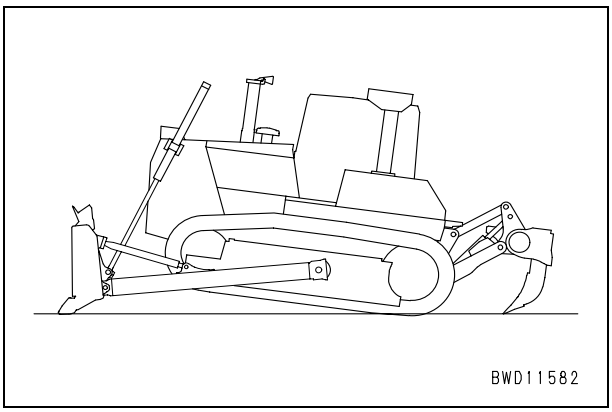

   2) Blade tilt cylinder
      Extract the tilt cylinder to the stroke end and brace the blade to push up the left side of the machine body.

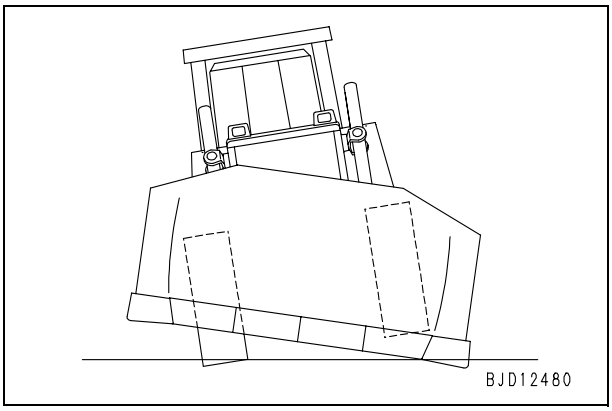

   3) Ripper lift cylinder
      Brace the ripper to push up the rear side of the machine body.

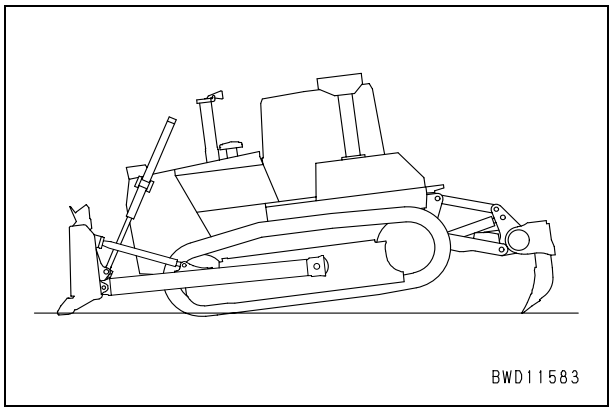

2. Turn the starting switch ON and set the work equipment lock lever in the FREE position.

3. Extend the cylinder to be tested with the corresponding lever and check its movement.
   - If the lowering speed is increased, the cylinder packing is defective.
   - If the lowering speed does not change, the control valve is defective.
   - ★ If the pressure in the accumulator is lost, run the engine for about 10 seconds to heighten the pressure in the accumulator.

[Reference]
Reason why the lowering speed is increased when the cylinder packing is the cause of the hydraulic drift:
1. If the machine is set in the above position (where the holding pressure is applied to the bottom side), the oil leaks from the bottom side to the head side. Since the volume on the head side is less than that on the bottom side by the volume of the rod, the pressure in the head side is increased by the oil flowing in from the bottom side.
2. As the pressure in the head side is increased, it is balanced at a certain level (which depends on the leakage), then the lowering speed is lowered.
3. If the circuit on the head side is opened to the drain circuit by the above operation of the lever (the bottom side is closed by the check valve at this time), the oil on the head side flows in the drain circuit. As a result, the pressure is unbalanced and the lowering speed is increased.

Measuring internal leakage of work equipment cylinder

★ Measuring instruments for internal leakage of work equipment cylinder

Symbol	Part No.	Part name
V	Commercially available	Measuring cylinder

⚠ **Stop the machine on level ground, lower the work equipment to the ground, stop the engine, and set the parking brake lever and work equipment lock lever in the LOCK position.**

★ Since the blade lift cylinder is equipped with a piston valve, its internal leakage cannot be measured.

★ Measure the internal leakage of work equipment cylinder under the following condition.
- Hydraulic oil temperature: Within operating range

1. Extend the cylinder to be measured to the stroke end and set the machine in the measuring position.
   1) Blade tilt cylinder
      Tilt the blade to the left end.
   2) Ripper lift cylinder
      Pull out the shank pin and lower the ripper to the end.
   3) Ripper tilt cylinder
      Tilt the ripper forward (in) to the end.

   ⚠ **Release the residual pressure from the cylinder circuit. For details, see Releasing residual pressure from work equipment cylinder.**

2. Disconnect hoses (1), (2), and (3) on the head side of the tested cylinder and stop the hose side with a plug or a flange.
   ★ When working on the blade tilt cylinder hoses, remove the hose cover of the frame.

   ⚠ **Take care not to disconnect the hoses on the bottom side.**
   - Hose (1): Blade tilt cylinder
     Plug: 07376-70422 (Size #04)
     O-ring: 02896-11012 (Size #04)

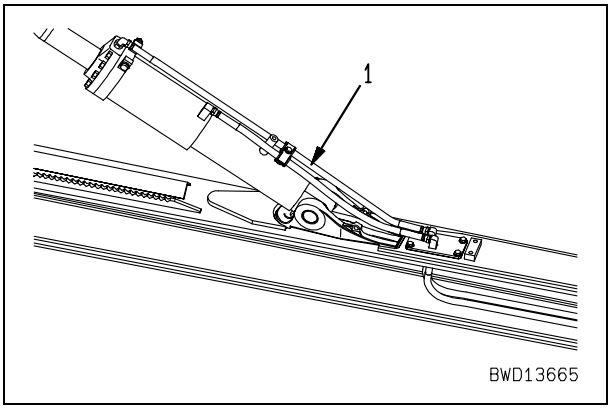

- Hose (2): Ripper lift cylinder
- Hose (3): Ripper tilt cylinder
  Head: 07378-11000 (Size #10)
  O-ring: 07000-13032 (Size #10)

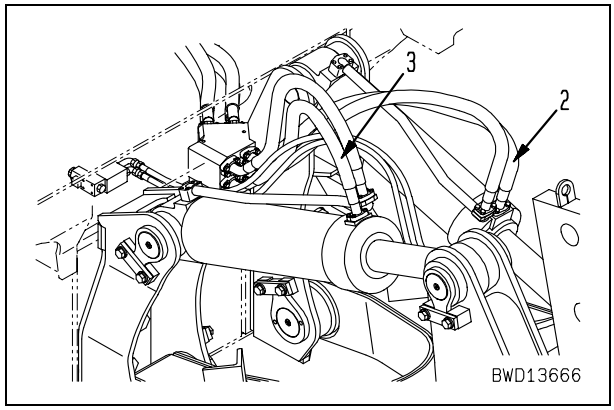

3. Run the engine at high idle and apply the relief pressure to the cylinder bottom side.
   - Blade tilt cylinder:
     Operate to tilt blade to left.
   - Ripper lift cylinder:
     Operate to lower ripper.
   - Ripper Tilt cylinder:
     Operate to tilt ripper forward (in).

4. After 30 second, measure leakage in 1 minute with measuring cylinder **V**.

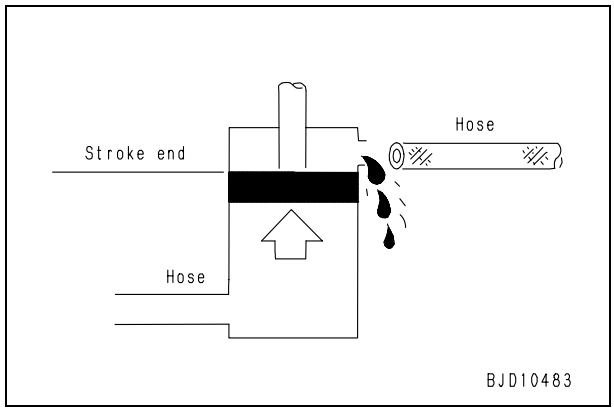

5. After finishing measurement, return the removed parts.
   ★ Bleed air from the cylinder circuit. For details, see Bleeding air from work equipment cylinder.

Releasing residual pressure from work equipment cylinder

★ When disconnecting the piping between the control valve and work equipment cylinder, release the residual pressure from the circuit according to the following procedure.

⚠ **Stop the machine on level ground, lower the work equipment to the ground, stop the engine, and set the parking brake lever and work equipment lock lever in the LOCK position.**

1. Loosen oil filler cap (1) of the hydraulic tank gradually to release the residual pressure from the tank.

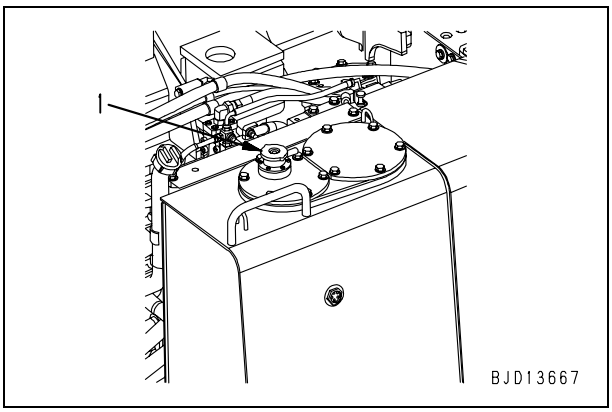

2. Turn the starting switch ON and set the work equipment lock lever in the FREE position.

3. Operate the blade control lever and ripper control lever to each direction.
   ★ If the control lever is operated 2 – 3 times, the residual pressure in the accumulator is released.

4. Run the engine at low idle for about 10 seconds to increase the pressure in the accumulator, then stop it.

5. Repeat steps 2 – 4 above 2 – 3 times.

Bleeding air from work equipment cylinder

★ If the work equipment cylinder is removed and installed or its piping is disconnected and connected, bleed air from its circuit according to the following procedure.

★ Before performing the following operation, check that the hydraulic oil level is normal.

1. Run the engine at low idle for about 5 minutes.

2. While running the engine at low idle, extend and retract the cylinder to be bled 4 – 5 times.
   ★ Move the piston rod to about 100 mm before the stroke end and never relieve the oil.

3. While running the engine at high idle, carry out the operation in step 2.

4. While running the engine at low idle, move the cylinder to the stroke end to relieve the oil.

Adjusting work equipment lock lever

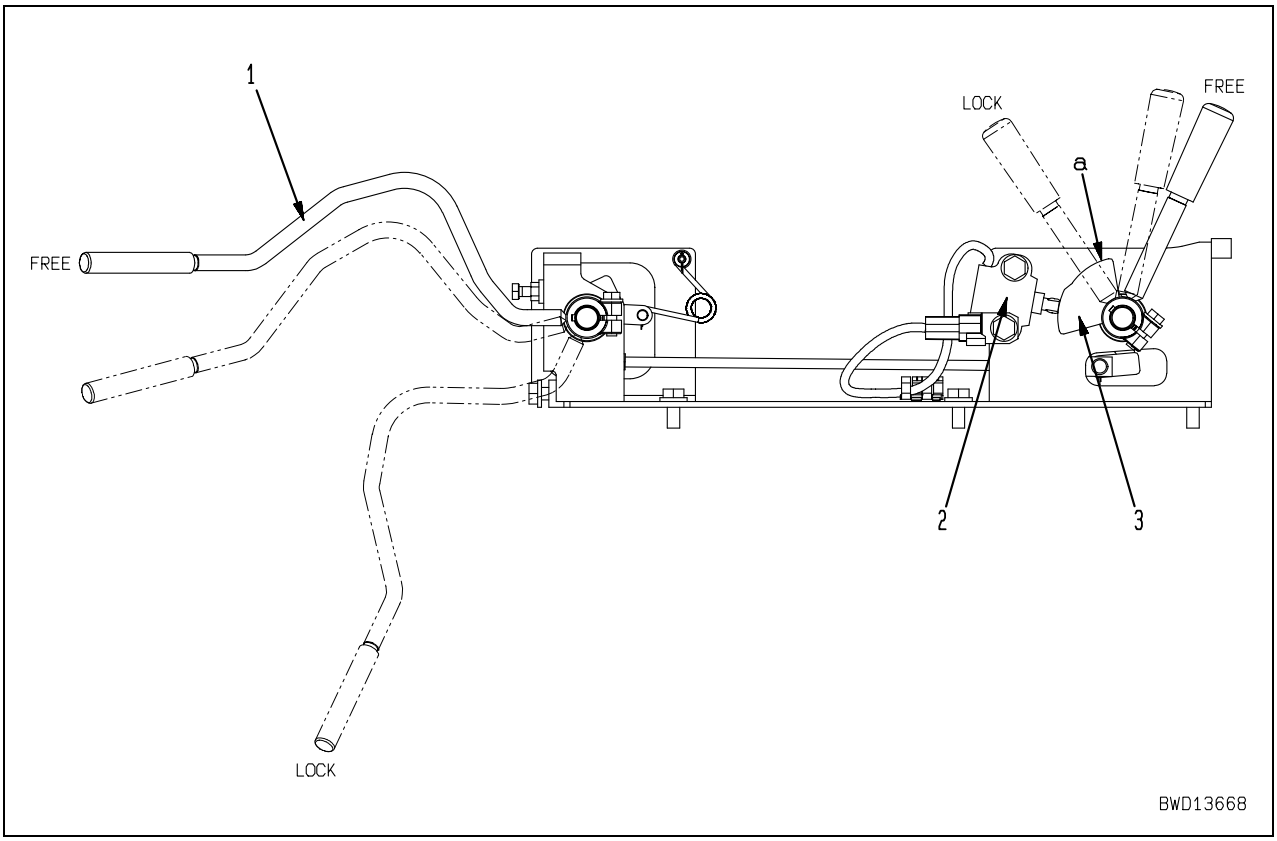

⚠ **Stop the machine on level ground, lower the work equipment to the ground, stop the engine, and set the parking brake lever and work equipment lock lever in the LOCK position.**

★ Tighten the locknut of the rod securely and bend the cotter pin securely.

★ When adjusting the work equipment lock lever, remove the control valve cover.

Control valve cover: **25 kg**

1. Set work equipment lock lever (1) in the LOCK position.

2. Set and install limit switch (2) to sliding surface (a) of lever (3).
   ★ Just set the roller of the limit switch to the sliding surface. Do not move it.

3. Set work equipment lock lever (1) in the FREE position and check that limit switch (2) operates normally.
   - Stroke of limit switch: 2.5 – 3 mm

4. Turn the starting switch ON and set the machine monitor to Monitoring function of the service mode.
   ★ Monitoring code: **70300 Blade Sw Input**
   ★ For the operating method, see Special functions of machine monitor (EMMS).

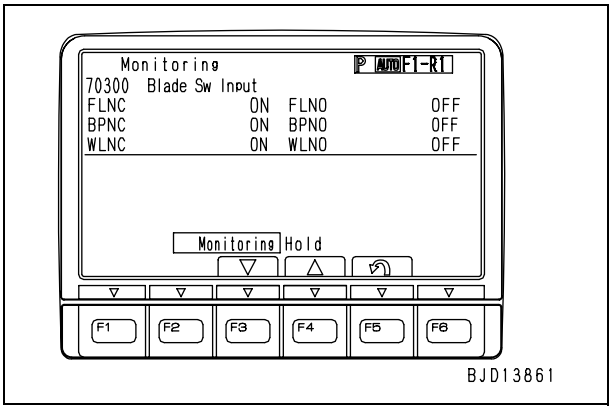

5. Check that the limit switch signal is input normally when work equipment lock lever (1) is set in the FREE position and LOCK position.
   - FREE position:
     Work equipment lock NC OFF, Work equipment lock NO ON
   - LOCK position:
     Work equipment lock NC ON, Work equipment lock NO OFF

Adjusting blade

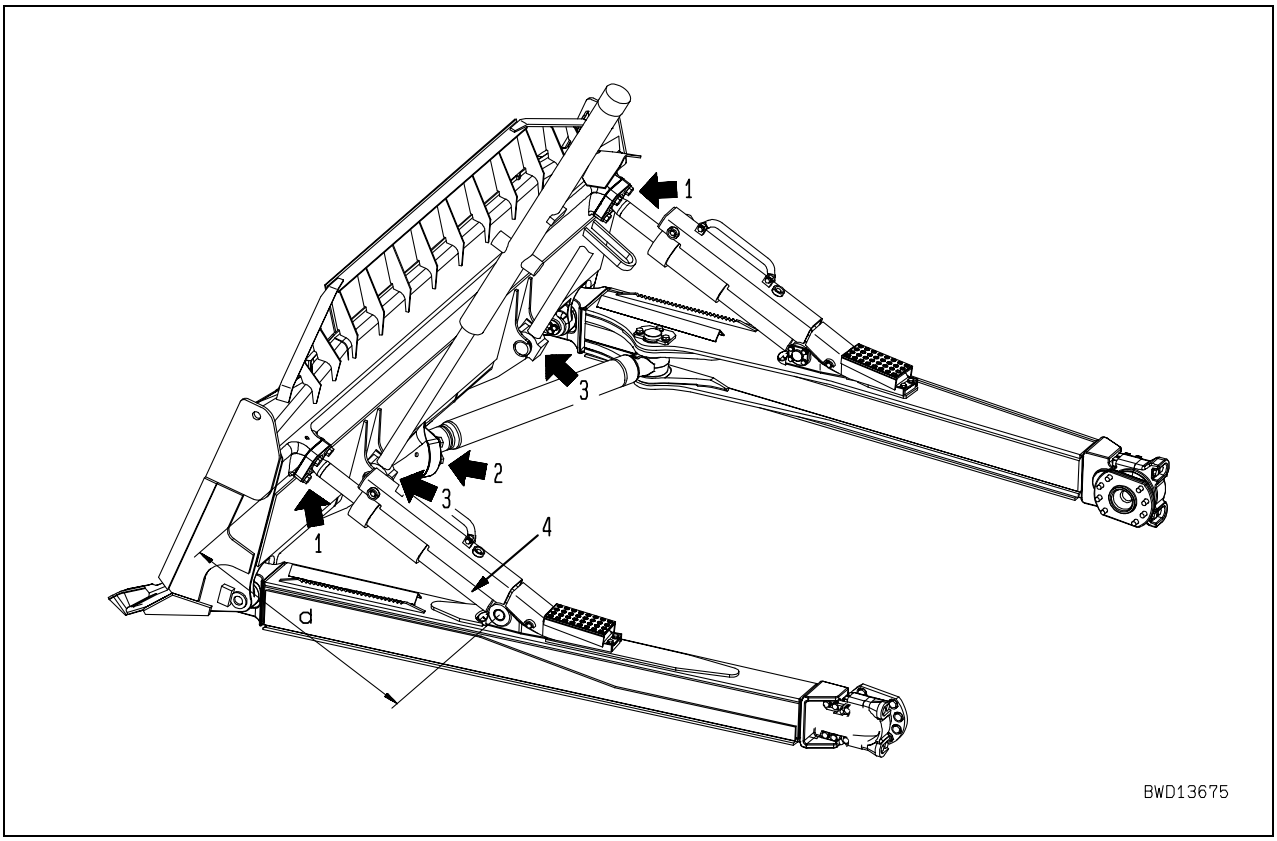

★ If the blade is removed and installed or disassembled and reassemble, adjust it according to the following procedure.
★ The above figure shows the blade of the dual tilt specification.

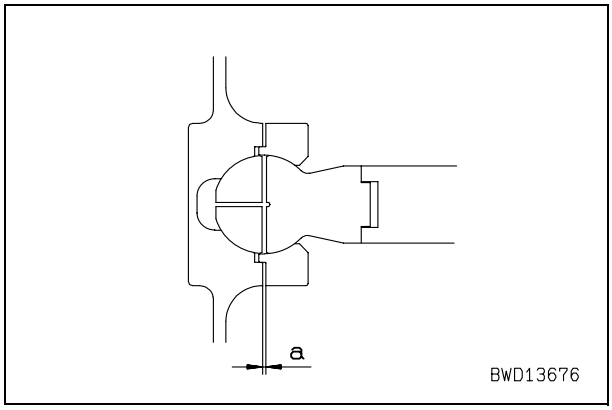

1. Adjusting shims for assembly

1) Adjust the shim of tilting section (1) (1 place).
   ★ After reassembling the tilting section, supply grease to it.
   Tilting section: **Grease (G2-LI)**

Adjusted point	Adjusted clearance	Standard clearance	Standard shim thickness
1	a	See note.	4 mm

★ Adjust the shim so that the play of the ball in the axial direction will be less than 1 mm and the ball can rotate smoothly.

2) Adjust the shim of center section (2) (2 places).
★ After reassembling the center section, supply grease to it.
Center section: **Grease (G2-LI)**

Adjusted point	Adjusted clearance	Standard clearance	Standard shim thickness
2	b	See note.	4 mm

★ Adjust the shim so that the play of the ball in the axial direction will be less than 1 mm and the ball can rotate smoothly.

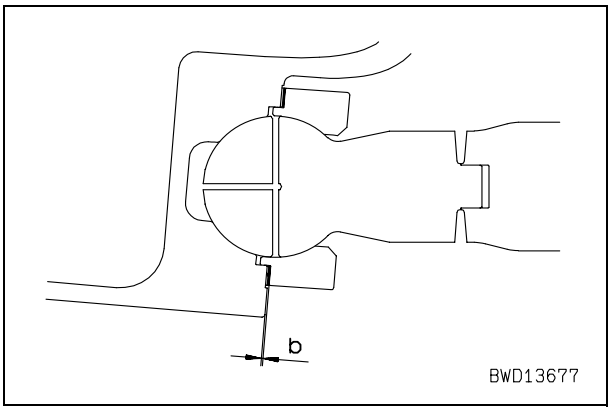

3) Adjust the shim of lifting section (3) (2 places).

Adjusted point	Adjusted clearance	Standard clearance	Standard shim thickness
3	c	Max. 1 mm	4 mm

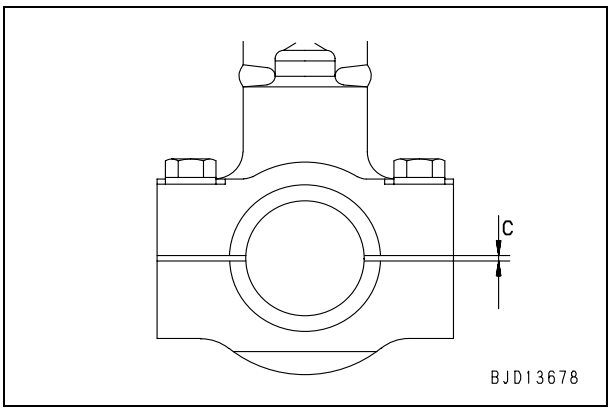

2. Adjusting blade tilt distance (Single tilt specification)
1) Adjust installed dimension (d) of brace (4) with the handle.

Dimension	Σ blade	Semi-U blade	Full-U blade
d	1,292 mm	1,372 mm	1,372 mm

2) Measure right and left tilt distances (e1) and (e2).

Dimension	Σ blade	Semi-U blade	Full-U blade
e1	565 mm	570 mm	583 mm
e2	565 mm	570 mm	583 mm

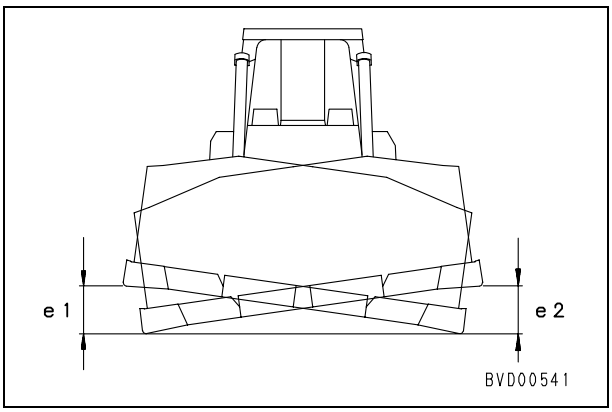

3) If both tilt distances are not the same, adjust installed dimension (d) of brace (4) according to the following procedure.
- e1 > e2:
  Increase installed dimension (d) slightly.
- e1 < e2:
  Decrease installed dimension (d) slightly.

Adjusting operator's cab

★ If the operator's cab is removed and installed or disassembled and transported and assembled in the field, test and adjust it according to the following procedure.

1. Measuring internal pressure of cab

★ Criterion
Criterion:
Measured value ≧ 88.2 Pa {9 mmH_2O}

★ Measurement condition
- Engine speed: High idle
- Fan speed: Fan 100% mode
- EXTERNAL/INTERNAL air changeover switch: EXTERNAL position
- Air conditioner fan switch: High (FULL)

1) Prepare a transparent vinyl hose.
   - Outside diameter: 6 mm, Length: 3,000 mm
2) Secure the inside end of the hose to the top of the seatback with a tape.
3) Remove 1 bolt (1) under the left console box. Pass the other end of the hose through the bolt hole and take it out of the top of battery cover (2) on the left side of the cab.

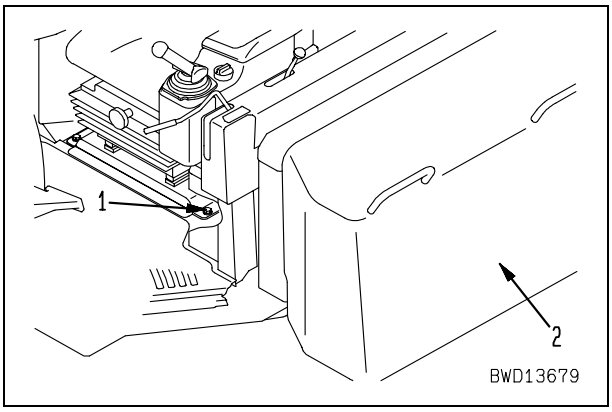

4) Seal the clearance between the hole of bolt (1) and hose [1] with tape (3).
5) Pour water in the hose up to about half and bend the hose in a U-shape.
6) Secure hose [1] to the outside of the cab and set the water level in the vinyl hose out of the cab to that in the cab.

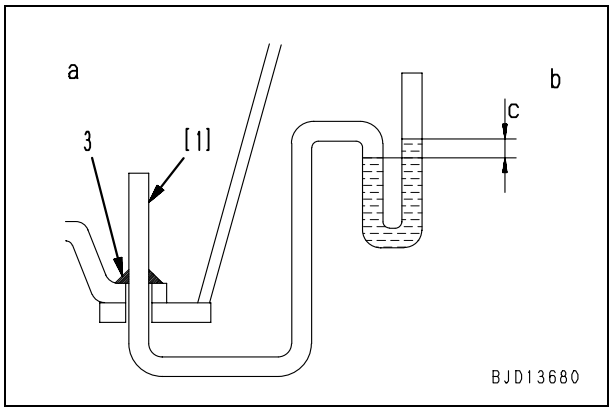

7) Start the engine and set the machine monitor to Adjusting function of the service mode.
   ★ Adjustment code: **1005** (Fan 100% mode)
   ★ For the operating method, see Special functions of machine monitor (EMMS).

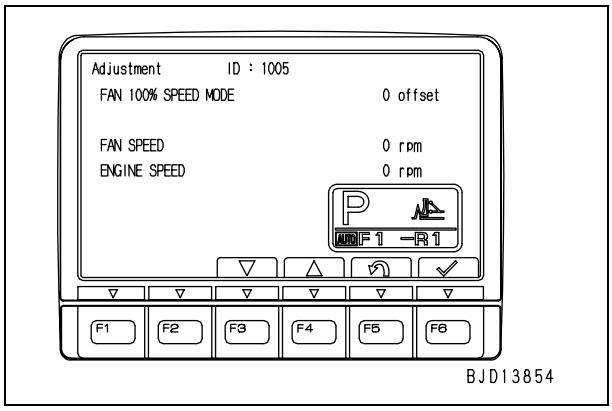

8) Run the engine at high idle and measure water level difference (c) in hose [1].
   - (a): Inside of cab (Pressurized)
   - (b): Out of cab (Ambient pressure)
   - (c): Measured value (Internal pressure of cab)

   ★ If the measured value (internal pressure of the cab) is lower than the standard value, check the seals of the holes for wiring harnesses and optional parts in the cab.

2. Checking searing performance

1) Close all the openings (doors and windows) of the cab.
2) Splash water around the hatched part of the cab at the rate of about 19 ℓ/min for 10 minutes.
   ★ At this time, it is not necessary to splash pressurized water.
3) Splash water horizontally from a hose over the contact portions of seal (4) between the cab and floor frame.

4) Check around the dashboard carefully for water leakage.
   ★ If water leaks, caulk the leaking part and check again.

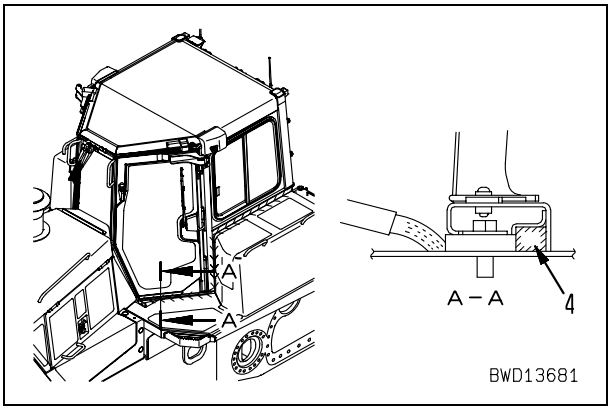

3. Testing and adjusting door lock (damper rubber)

★ Close the door and check the relationship between the operator's cab and door (damper rubber portions). If there is any abnormality, adjust it.

1) Stick adhesive tape [2] to the contact face of damper rubber (6) of door (5).
   ★ Check both sides, 2 places on each side.
2) Open and close door (5) 2 – 3 times.
3) Check the contact portions of adhesive tape [2] and operator's cab.
   - Normal:
     When the door is closed, the damper rubber comes in contact lightly (No adjustment is required).
   - Abnormal:
     When the door is closed, the damper rubber does not come in contact or comes in contact so strongly that the adhesive tape is removed (Adjustment is required).

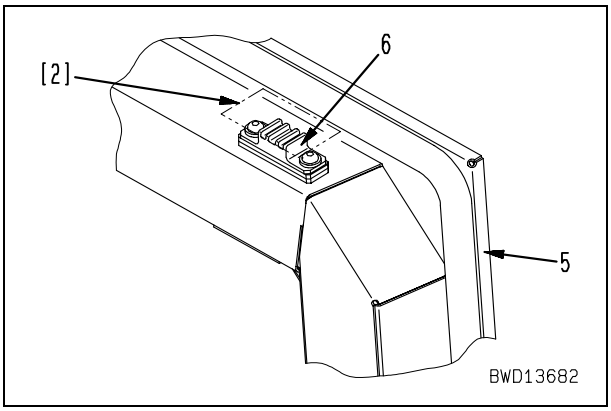

4) Loosen the mounting bolts of damper rubber (6).
   ★ You can remove and install the shims without removing the mounting bolts.
5) Increase or decrease shims (7) under damper rubber (6) to adjust the height of damper rubber (6) properly.

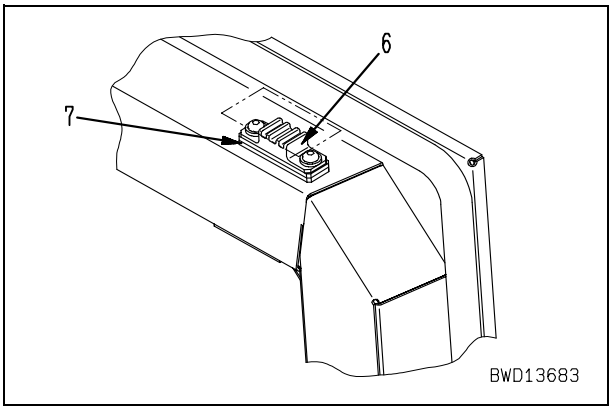

4. Testing and adjusting door lock (latch and striker)

★ Close the door and check the relationship between the operator's cab and door (latch and striker). If there is any abnormality, adjust it.

1) Move door (5) in the closing direction and check the engaging condition of latch (8) and striker (9).
   ★ Check quantity of misalignment (f) between center of latch (d) and center of striker (e) from the direction of **A**.
   - Normal: Quantity of misalignment (f) is 0.5 mm or less.

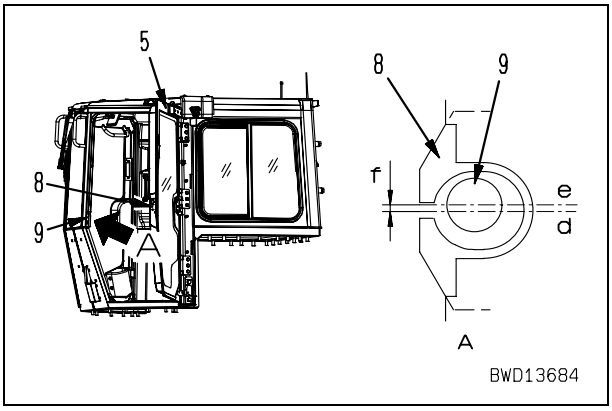

2) Tighten the mounting bolts of striker (9) temporarily. Then, open and close door (5) 2 – 3 times to align latch (8) with striker (9).
3) Check the engagement of latch (8) and striker (9).
4) Tighten the mounting bolts of striker (9) securely.

5) Open and close door (5) and check that it is locked and unlocked smoothly.
   ★ If the door is not locked or unlocked smoothly (the operating effort of the knob is large), repeat adjustment from the first.
   ★ Operating effort of door knob:
   49 ± 19.6 N {5 ± 2 kg}
6) Apply grease to latch (8).
   ★ If the latch dries up, the operating effort of the knob is increased. Accordingly, apply sufficient grease to the latch.
   Latch: **Grease (G2-LI)**

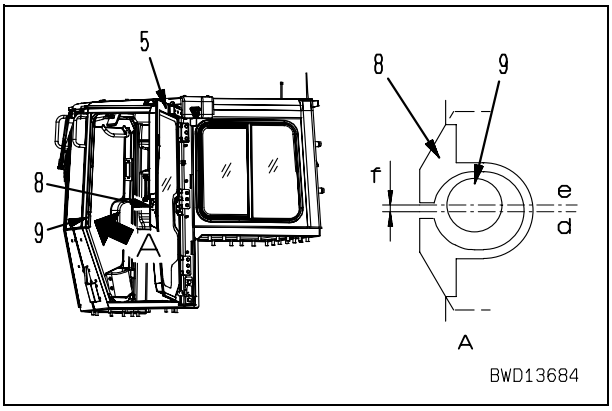

5. Testing and adjusting open lock (latch and striker)
   ★ Check the relationship between the operator's cab and door (latch and striker) while the door is locked open. If there is any fault, adjust the open lock.
1) Check the relationship between the open lock latch and striker from the direction of **B**.
   ★ Move the door in the opening direction and check the engagement of the latch and striker.

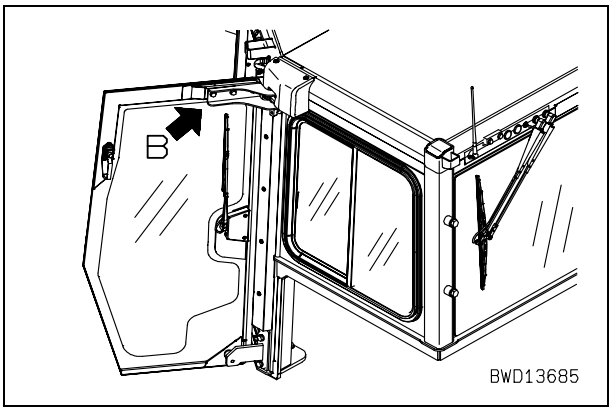

2) Check that striker (10) is not leaning against or from center (g) of latch (11).
3) Check that striker (10) is aligned with center (h) of latch (11).
   ● Normal: Quantity of misalignment is 0.5 mm or less.

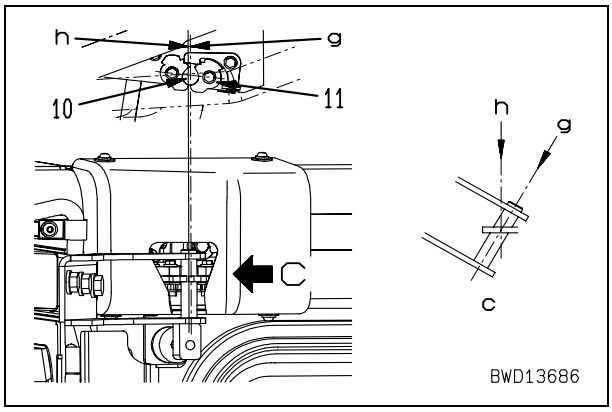

4) Loosen the mounting bolts of striker (10).
5) While setting striker (10) upright, tighten the mounting bolts.

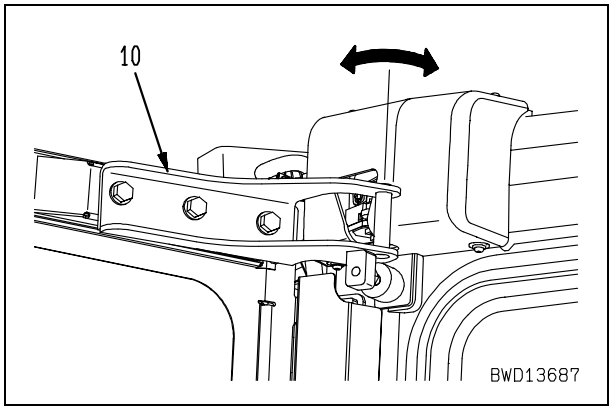

6. Testing and adjusting open lock (stopper rubber)

★ Check the relationship between the operator's cab and door (stopper rubber) while the door is locked open. If there is any fault, adjust the open lock.

1) Lock the door open and move it in the forward and reverse directions to check that it does not have play.
   ★ Check both sides, 2 places on each side.
2) Check that the operating effort of the unlock lever is not large.
3) Loosen the locknut of stopper rubber (12) (upper one).

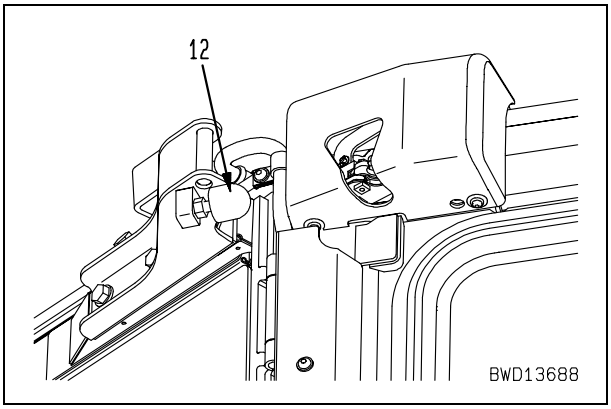

4) Loosen the locknut of stopper rubber (13) (lower one).

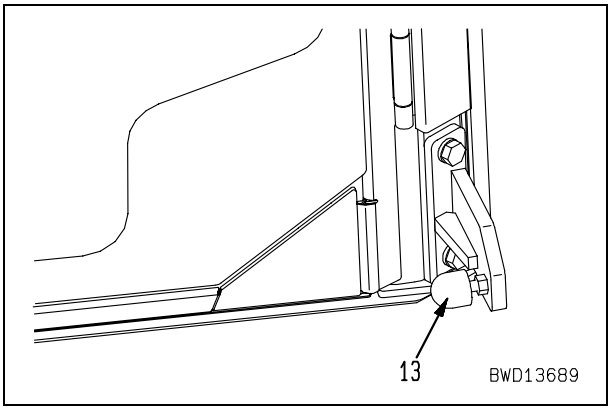

5) Adjust the height of stopper rubbers (12) and (13) according to the trouble.
   ★ If there is play, project (heighten) the stopper rubber until the play is eliminated.
   ★ If the door is not locked easily or the unlock lever is heavy, return (lower) the stopper rubber in the range that the door does not have play.
6) While fixing stopper rubbers (12) and (13), tighten the locknuts.

D155AX-6 Bulldozer

Form No. SEN00680-01

© 2006 KOMATSU
All Rights Reserved
Printed in Japan 05-06 (02)

BULLDOZER

D155AX-6

Machine model	Serial number
D155AX-6	80001 and up

30 Testing and adjusting

Testing and adjusting, Part 3

Testing and adjusting, Part 3 2
Special functions of machine monitor (EMMS) 2

Testing and adjusting, Part 3

Special functions of machine monitor (EMMS)

Air conditioner specification

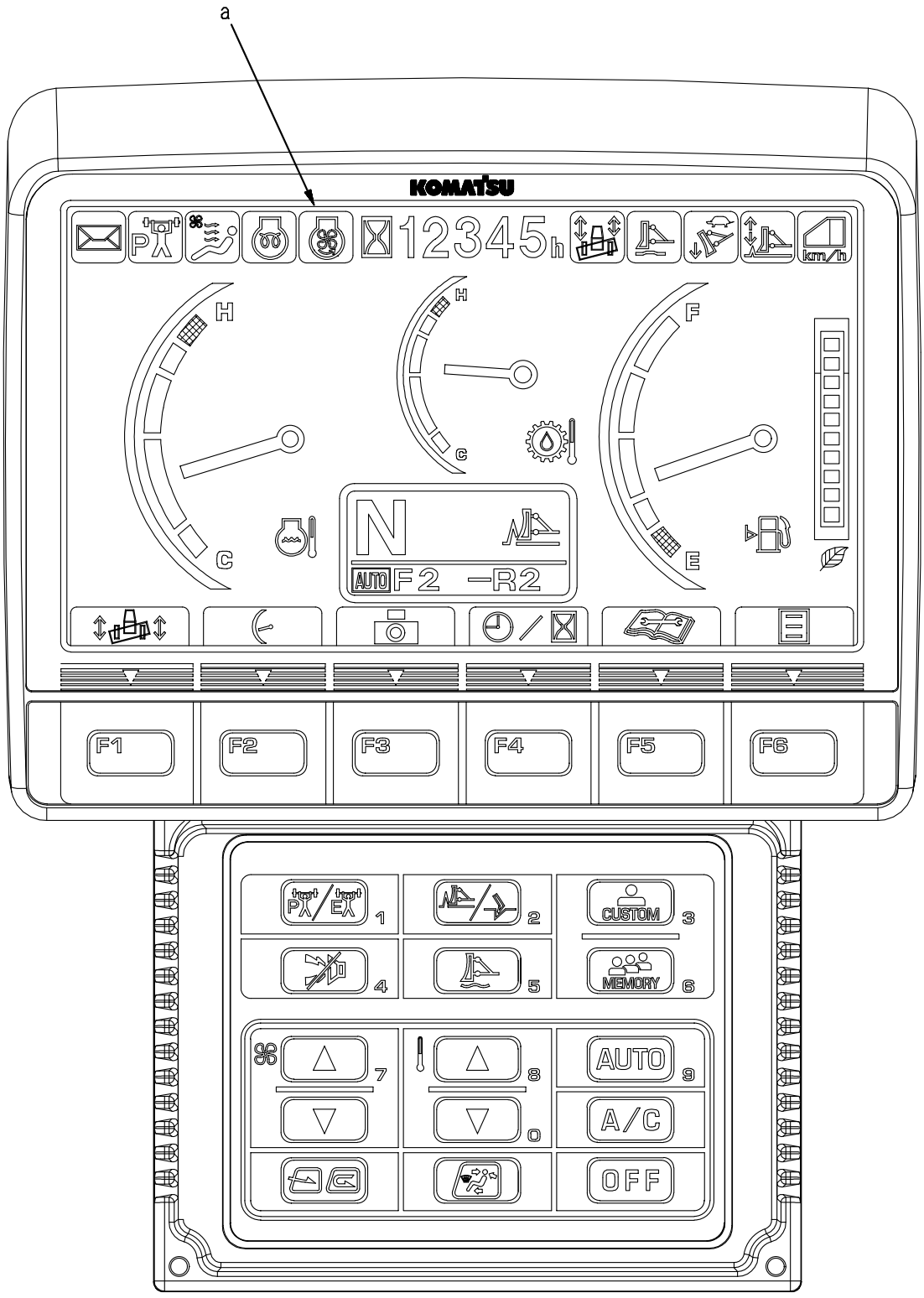

Heater specification

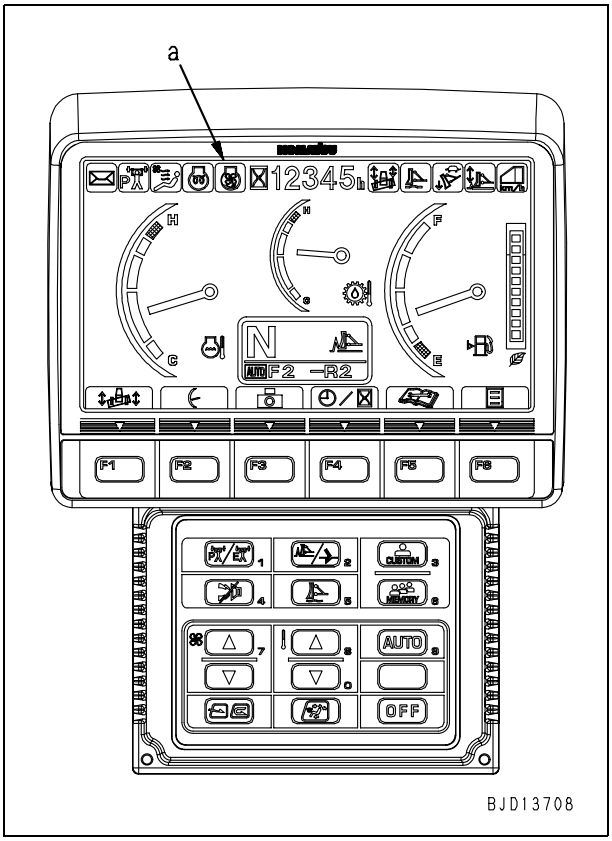

Upper section of machine monitor (Display section)

(a): Multi-display

★ The figure shows an example of display of symbols and gauges in the ordinary display mode (The contents of display depend on the condition of the machine and operating method).

★ When the engine is started, the battery voltage may lower suddenly, depending on the ambient temperature and the condition of the battery. In this case, the machine monitor goes off for a moment. This phenomenon is not a failure, however.

Upper section of machine monitor (Switch section)

[F1]: F1 function switch
[F2]: F2 function switch
[F3]: F3 function switch
[F4]: F4 function switch
[F5]: F5 function switch
[F6]: F6 function switch

★ The function of each function switch is indicated by graphic mark in the multi-display (a) above that function switch.

★ If the graphic mark of a function switch is not displayed, that function switch is not working.

Lower section of machine monitor (Switch section)

[1]: Numeral 1 input switch/Operation mode selector switch
[2]: Numeral 2 input switch/Gearshift mode selector switch
[3]: Numeral 3 input switch/Customize switch
[4]: Numeral 4 input switch/Buzzer cancel switch
[5]: Numeral 5 input switch/Float mode switch
[6]: Numeral 6 input switch/Customize memory switch
[7]: Numeral 7 input switch/Air conditioner or heater switch
[8]: Numeral 8 input switch/Air conditioner or heater switch
[9]: Numeral 9 input switch/Air conditioner or heater switch
[0]: Numeral 0 input switch/Air conditioner or heater switch

Switch having no numerals: Air conditioner or heater switch

★ Each switch has the function indicated by graphic mark and the function of inputting a numeral.

★ The machine monitor automatically judges which function of each switch is currently effective, according to the display condition of multi-display (a).

★ The difference between the air conditioner specification and heater specification is only the functions of the switches in this section.

■ **Ordinary functions and special functions of machine monitor**

The machine monitor has the ordinary functions and special functions and displays information of various types on the multi-display.

Some items are displayed automatically according to the internal setting of the machine monitor and the others are displayed according to the operation of the switches.

1. **Ordinary functions: Operator mode**
   The items in this mode are displayed ordinarily. The operator can display and set them by operating the switches (Display and setting of some items need special operations of the switches).
2. **Special functions: Service mode**
   The items in this mode are not displayed ordinarily. Each serviceman can display them by operating the switches specially. This mode is used for special setting, testing, adjusting, or troubleshooting.

Operator mode (Outline)		Page
		5 p
A	Display of KOMATSU logo	5 p
A	Display of screen to input password	6 p
A	Display of check before starting	6 p
A	Display of warning after check before starting	6 p
A	Display of ending of maintenance interval	6 p
A	Display of check of preset	7 p
A	Display of ordinary screen	7 p
A	Display of end screen	7 p
B	Selection of operation mode	7 p
B	Selection of gearshift mode	8 p
B	Customizing operation	8 p
B	Operation of customize memory	8 p
B	Selection of float mode	8 p
B	Operation to cancel alarm buzzer	8 p
B	Operation of air conditioner/heater	9 p
B	Selection of dual tilt (Dual tilt specification)	9 p
B	Operation to display camera mode (if camera is installed)	10 p
B	Operation to display clock and service meter	10 p
B	Check of maintenance information	11 p
B	Setting and display of user mode (including KOMTRAX messages for user)	11 p
C	Display of caution monitor	12 p
C	Display of action code and failure code	12 p
↓ (Special operations)		
D	Function of checking display of LCD (Liquid Crystal Display)	14 p
D	Function of checking service meter	14 p
D	Function of changing maintenance password	15 p

Special operations →

Service mode		Page
		16 p
01 Monitoring		17 p
02 Abnormality Record	Mechanical system "Abnormality Record"	24 p
	Electrical system "Abnormality Record"	25 p
	Air conditioner "Abnormality Record"/ Heater "Abnormality Record"	35 p
03 Maintenance Record		36 p
04 Maintenance Mode Change		37 p
05 Phone Number Entry		39 p
06 Default	Key-on Mode	40 p
	Setting of unit	41 p
	Setting of maintenance password	42 p
	Setting of camera	43 p
	Setting of ECO display	44 p
07 Adjustment		45 p
08 PM CLINIC		71 p
09 Cylinder Cut-Out		72 p
10 No Injection		73 p
11 Fuel Consumption		74 p
12 KOMTRAX Settings	Terminal Status	75 p
	GPS & Communication Status	76 p
	Modem S/N	77 p
13 Service Message		78 p

★ Classification of operator mode
- A: Display/Function from time when starting switch is turned ON to time when screen changes to ordinary screen and display after starting switch is turned OFF
- B: Display/Function when switch of machine monitor is operated
- C: Display/Function when certain condition is satisfied
- D: Display/Function which needs special operation of switch

■ **Operator mode (Outline)**

★ Only outline of the operator mode is described in this section. For details of contents/operation of each function/display, see "the Structure, function and maintenance standard, or Operation and Maintenance Manual".

★ The following are the displays or functions of the operator mode explained in this section (including some items which need special operations).

	Display pattern			
	a	b	c	d
Display of KOMATSU logo	1	1	1	1
Display of screen to input password	2	–	–	–
Display of check before starting	3	2	2	2
Display of warning after check before starting	–	–	3	–
Display of ending of maintenance interval	–	–	–	3
Display of check of preset	4	4	4	4
Display of ordinary screen	5	4	5	5
Display of end screen				
Selection of operation mode				
Selection of gearshift mode				
Customizing operation				
Operation of customize memory				
Selection of float mode				
Operation to cancel alarm buzzer				
Operation of air conditioner/heater				
Selection of dual tilt (Dual tilt specification)				
Operation to display camera mode (if camera is installed)				
Operation to display clock and service meter				
Check of maintenance information				
Setting and display of user mode (including KOMTRAX messages for user)				
Display of caution monitor				
Display of action code and failure code				

↓ (Special operations)

Function of checking display of LCD (Liquid Crystal Display)
Function of checking service meter
Function of changing maintenance password

★ Display pattern of operator mode
The contents of display from the time when starting switch is turned ON to the time when screen changes to ordinary screen depends on the setting and condition of the machine.
a: When engine start lock is set effective
b: When engine start lock is set ineffective
c: When there is abnormal item in check-before-starting items
d: When there is maintenance item which is not maintained after specified interval

Display of KOMATSU logo

When the starting switch is turned ON, the KOMATSU logo is displayed for 2 seconds.
After the KOMATSU logo is displayed for 2 seconds, the screen changes to "Display of screen to input password" or "Display of check before starting".

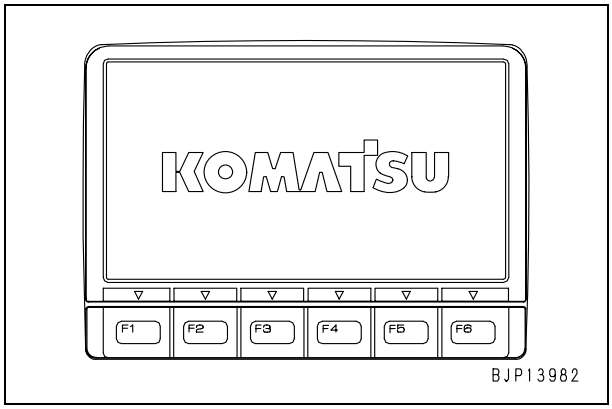

★ The following screen may be displayed instead of the above "Display of screen to input password screen".

★ If this screen is displayed, call the person responsible to operation of KOMTRAX in your Komatsu distributor and ask for remedy.

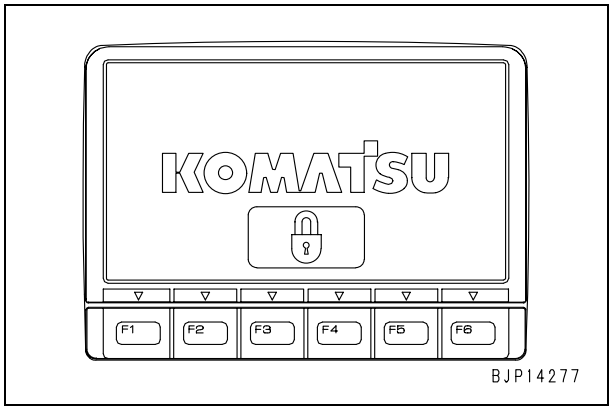

Display of screen to input password

After the KOMATSU logo is displayed, the screen to input the engine start lock password is displayed.

★ This screen is displayed only when the engine start lock function is set effective.
★ If the password is input normally, the screen changes to "Display of check before starting".
★ The machine monitor has some password functions other than the engine start lock. Those functions are independent from one another.

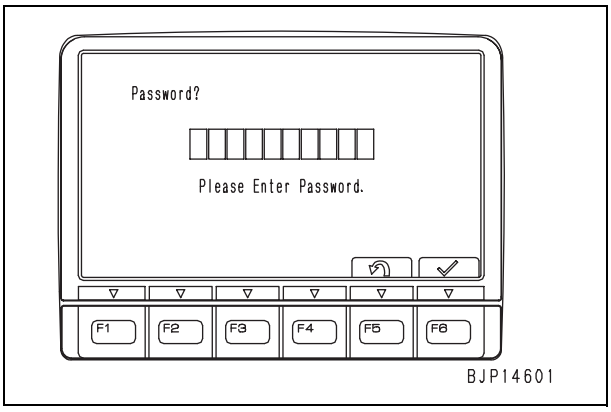

Display of check before starting

When the screen changes to the check-before-starting screen, the check before starting is carried out for 2 seconds.

★ If any abnormality is detected by the check before starting, the screen changes to "Display of warning after check before starting" or "Display of ending of maintenance interval".
★ If no abnormality is detected by the check before starting, the screen changes to "Display of check of preset".
★ The monitors (3 pieces) displayed on the screen are the items under the check before starting.

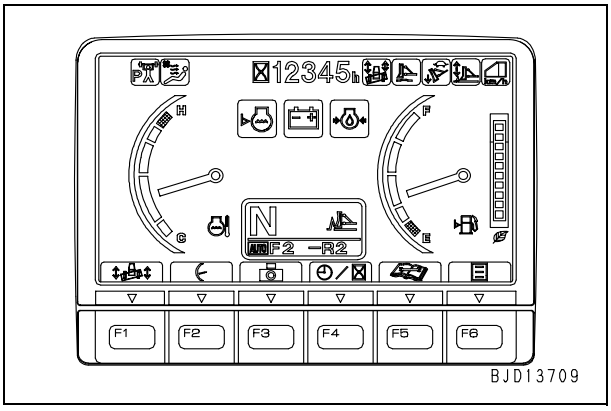

Display of warning after check before starting

If any abnormality is detected by the check before starting, the warning monitor is displayed on the screen.

★ The following figure shows that the radiator coolant level monitor (a) is warning of low radiator coolant level.

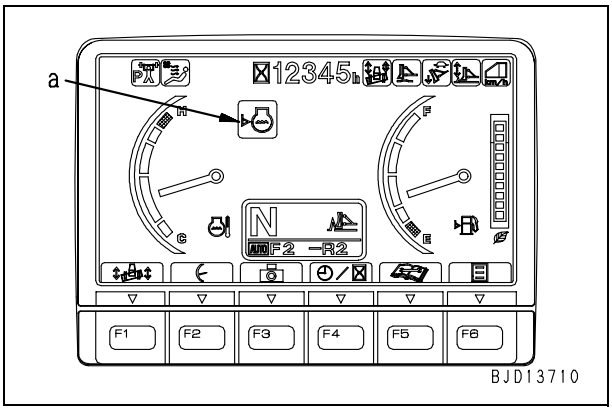

Display of ending of maintenance interval

When the check before starting is carried out, if a maintenance item is near or after the end of the set interval, the maintenance monitor is displayed for 30 seconds to urge the operator to maintenance.

★ This screen is displayed only when the maintenance function is effective. The color of the maintenance monitor (yellow or red) indicates the length of the time after the maintenance interval.
★ Set or change the maintenance function in the service mode.

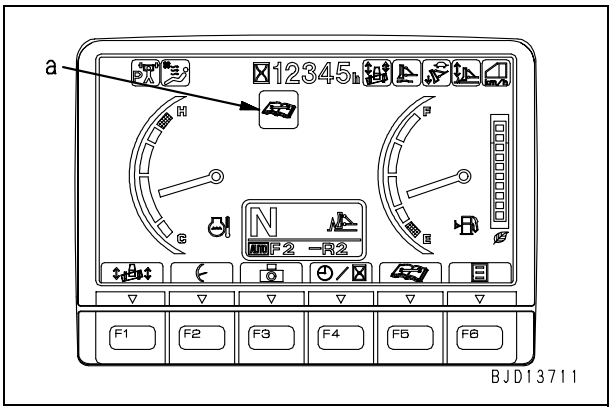

Display of check of preset

If the check before starting is finished normally, the screen to check the preset (gear speed at start) is displayed for 2 seconds.

★ After display of check of preset is finished, the screen changes to "Display of ordinary screen".

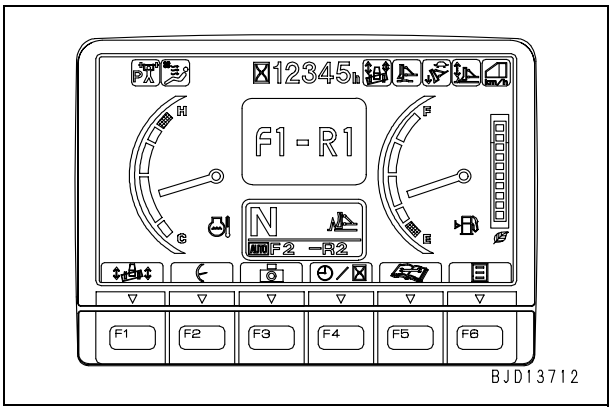

Display of ordinary screen

If the machine monitor starts normally, the ordinary screen is displayed.

★ Service meter (a) or a clock is displayed at the center upper section of the screen (The service meter or clock is selected with [F4]).

★ Power train oil temperature gauge (b) is displayed on the multi-gauge section (It is turned ON and OFF with the user mode function or [F2]).

★ ECO gauge (c) is displayed at the right end of the screen (It is turned ON and OFF in the service mode).

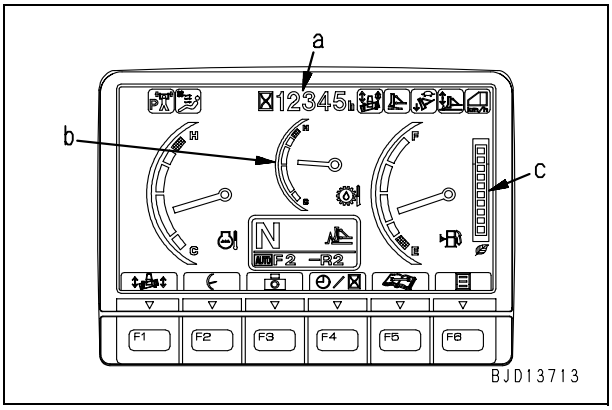

Display of end screen

When the starting switch is turned OFF, the end screen is displayed for 5 seconds.

★ Another message may be displayed on the end screen, depending on the message display function of KOMTRAX.

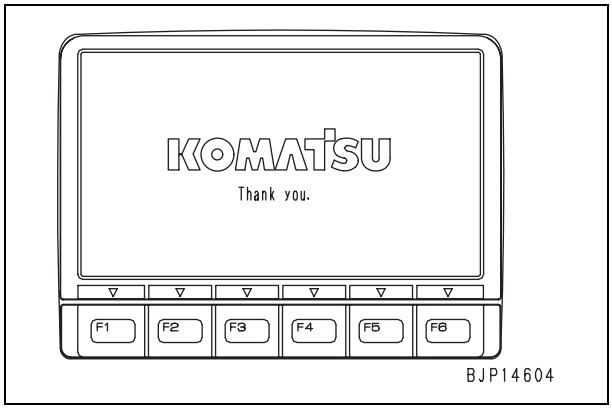

Selection of operation mode

While the ordinary screen is displayed, press the operation mode selector switch, and the operation mode monitor (a) changes.

★ Each time the switch is pressed, the operation mode changes between [P (Power)] and [E (Economy)].

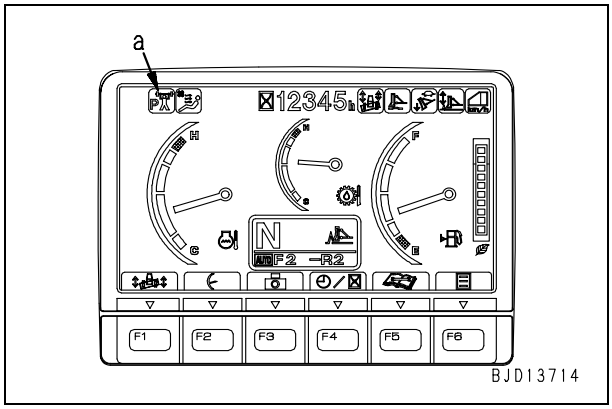

Selection of gearshift mode

While the ordinary screen is displayed, press the gearshift mode selector switch, and the gearshift mode monitor (a) in the gear speed display section changes.

★ Each time the switch is pressed, the gearshift mode changes between [Dozing (Automatic gearshift)] and [Ripping (Manual gearshift)].
★ If dozing (automatic gearshift) is selected, AUTO symbol (b) is displayed in the gear speed display section.

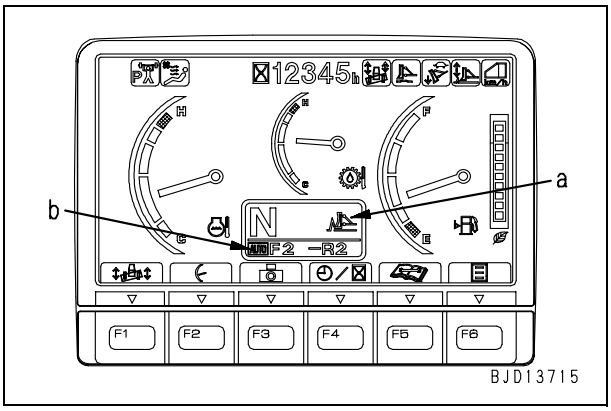

Customizing operation

While the ordinary screen is displayed, press the customize switch, and you can change the setting of the machine.

★ If the customize memory switch is operated while the above screen is displayed, up to 5 settings can be saved.

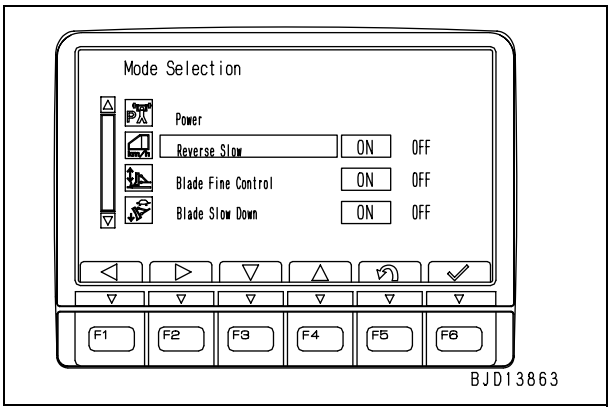

Operation of customize memory

While the ordinary screen is displayed, press the customize memory switch, and you can select the recorded setting of customization.

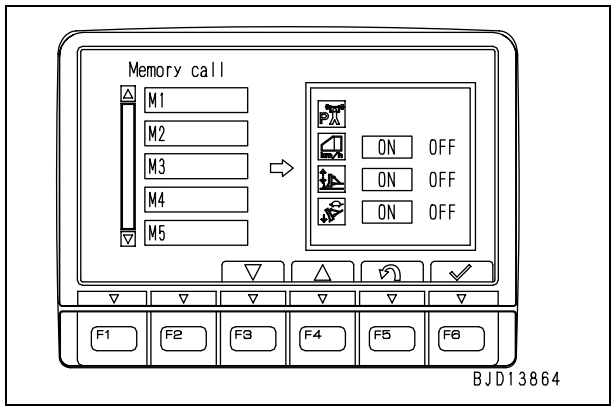

Selection of float mode

While the ordinary screen is displayed, press the float mode switch, and the float mode monitor (a) changes.

★ Each time the switch is pressed, the float mode changes between [ON (Float is effective)] and [OFF (Float is ineffective)].
★ If the float mode is turned ON, float mode monitor (a) is displayed. If the former is turned OFF, the latter is put out.
★ The float mode switch sets the float button of the blade control lever effective or ineffective. It does not float the blade.

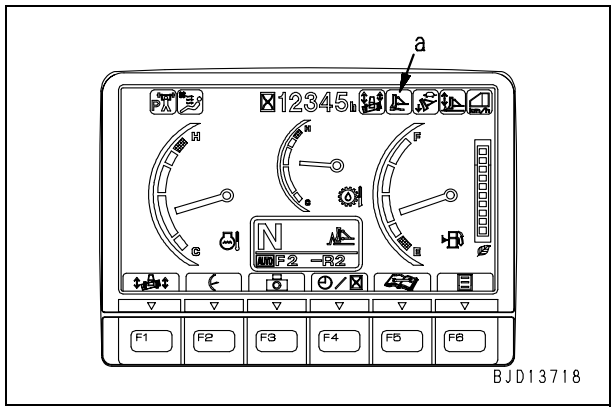

Operation to cancel alarm buzzer

While the alarm buzzer is sounding, if the buzzer cancel switch is pressed, the alarm buzzer stops.

★ Even if the buzzer cancel switch is pressed, the screen does not change.

Operation of air conditioner/heater

While the ordinary screen is displayed, press the air conditioner switch or heater switch, and the Air-conditioner Adjustment screen or Heater Adjustment screen is displayed.

★ While the Air-conditioner Adjustment screen or Heater Adjustment screen is displayed, if you do not touch any switch for 5 seconds, the screen changes to the ordinary screen.

★ Air conditioner specification

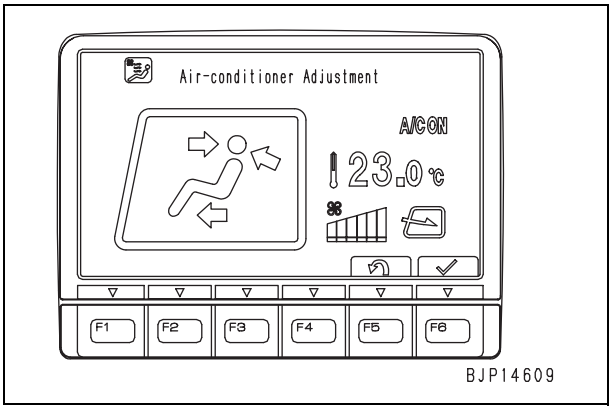

★ Heater specification

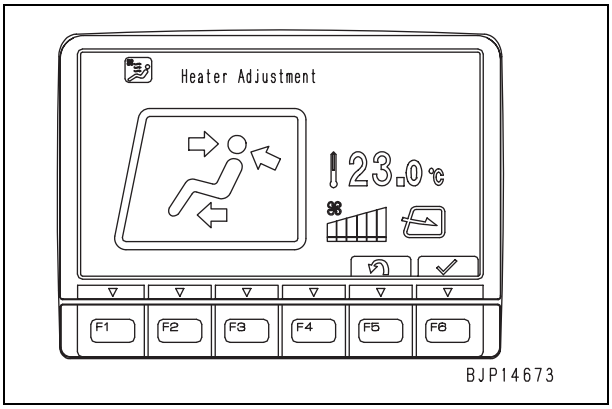

Selection of dual tilt (Dual tilt specification)

While the ordinary screen is displayed, press [F1], and the dual tilt monitor (a) changes.

★ Each time [F1] is pressed, the dual tilt mode changes between [ON (Dual)] and [OFF (Single)].

★ If the dual tilt mode is turned ON, dual tilt mode monitor (a) is displayed. If the former is turned OFF, the latter is put out.

★ [F1] sets the single tilt or dual tilt mode of the blade of dual tilt specification. It does not fix the tilt or pitch function of the blade control lever.

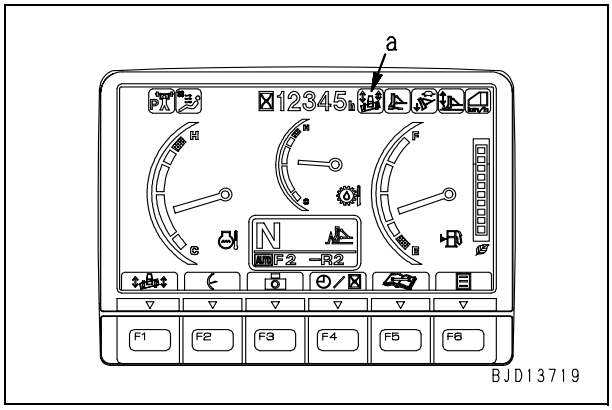

Operation to display camera mode (if camera is installed)

When a camera is installed, if [F3] is pressed, the multi-display changes to the camera image.

★ Set the connection of the camera in the service mode.

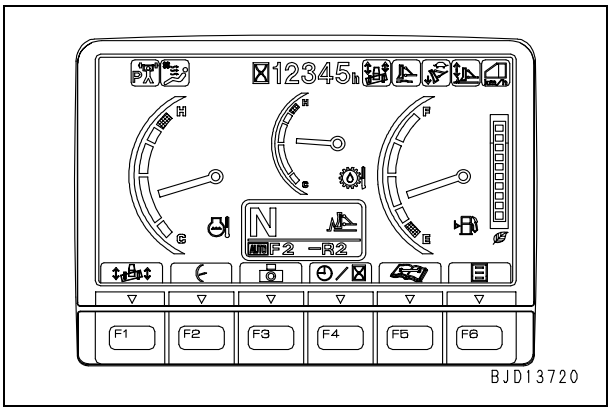

★ Up to 3 cameras can be connected. If the camera mode is selected, however, only the image of camera 1 is always displayed.

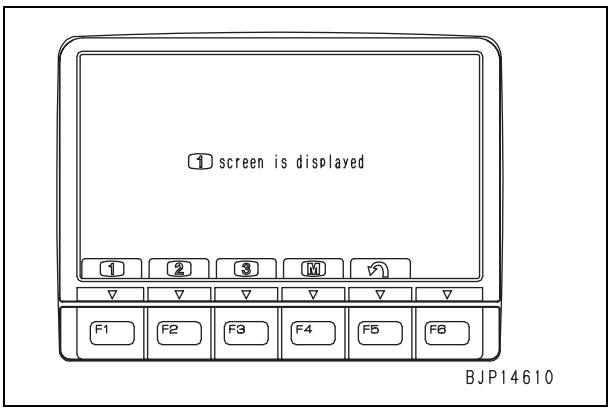

★ If a caution is generated in the camera mode, the caution monitor is displayed at the left upper of the screen.

★ When an error that there is a user code occurs in the camera mode, if the machine stops for 10 seconds, the screen changes to the ordinary screen and displays the error information.

★ When 2 or more cameras are connected, the image of one of them or the images of 2 of them can be displayed.

★ If 2-camera image display [F4] is selected, the image of camera 1 is displayed on the left side of the screen and the image of camera 2 is displayed on the right side. The image of camera 3 is displayed only singly.

★ If the images of 2 cameras are displayed simultaneously, images are displayed at intervals of 1 second on the right and left screen.

Operation to display clock and service meter

While the ordinary screen is displayed, press [F4], and section (a) changes to the service meter and clock alternately.

★ When the clock is selected, adjust the time, set 12-hour or 24-hour display, and set the summer time with the user mode function.

★ Display of service meter

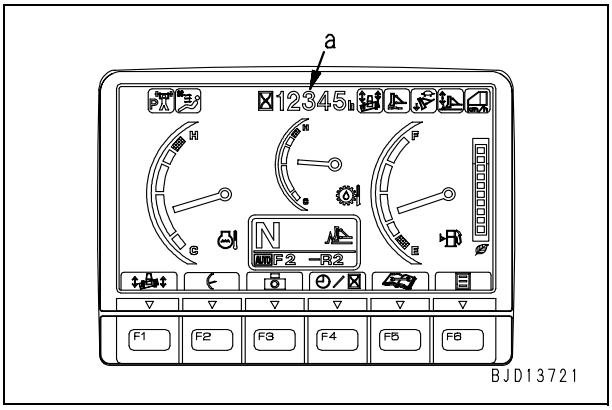

★ Display of clock

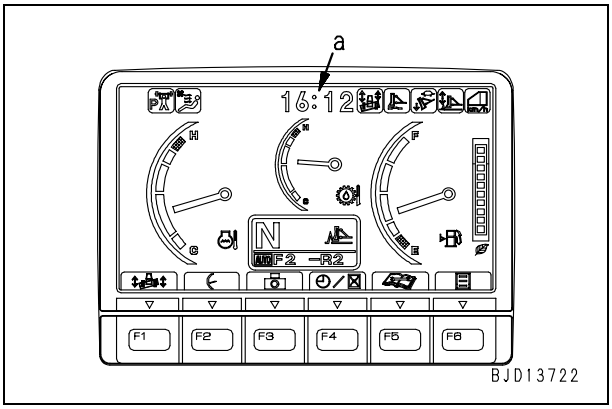

Check of maintenance information

While the maintenance monitor or ordinary screen is displayed, press [F5], and the maintenance table screen is displayed.

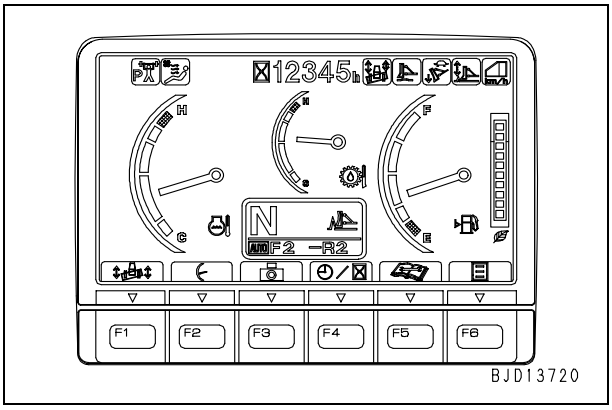

★ To reset the time left after finishing maintenance, more operations are necessary.

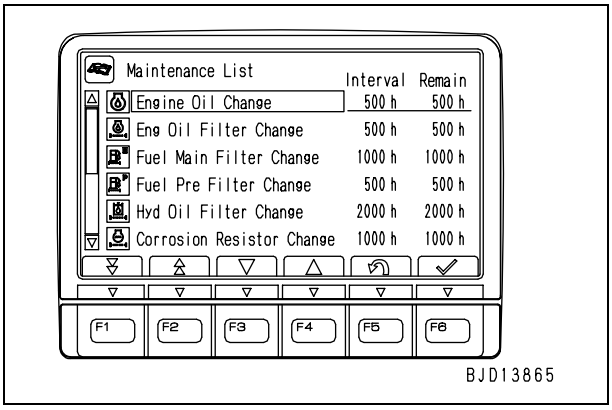

Setting and display of user mode (including KOMTRAX messages for user)

While the ordinary screen is displayed, press [F6], and the user menu screen is displayed.

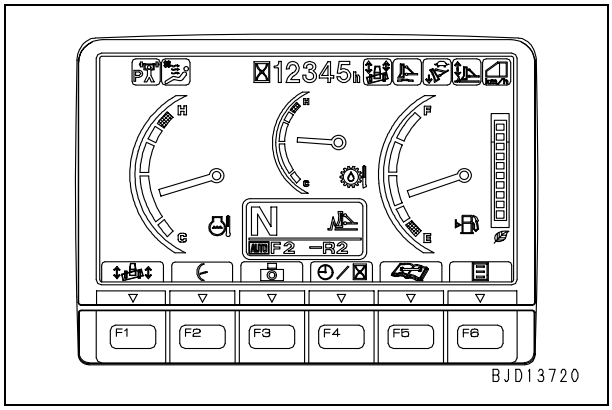

★ There are following items in the user menu.

Utility Screen Select
Multi Gage Select
Screen Adjustment
Clock Adjustment
Language
Message display
Hydraulic fan reversing

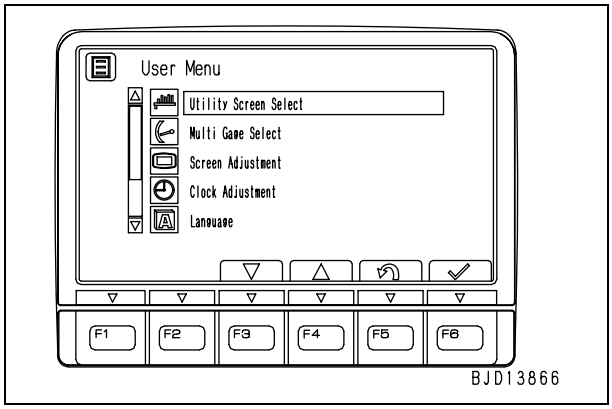

[KOMTRAX message]

- There are 2 types of KOMTRAX message; one is for the user and the other is for the service.
- For user:
  A message transmitted from the KOMTRAX base station for the user. If it is received, the message monitor is displayed on the ordinary screen. To see the contents of the message, operate "Message display" in the above user menu.

- For service:
  A message transmitted from the KOMTRAX base station for the service. Even if it is received, nothing is displayed on the ordinary screen. To see the contents of the message, operate "KOMTRAX message display" in the service menu.

Display of caution monitor

If an abnormality which displays a caution monitor occurs on the ordinary screen or camera mode screen, the caution monitor is displayed large for a moment and then displayed at (a) in the screen.

★ On the camera mode screen, the caution monitor blinks at the left upper of the screen when the caution is generated.

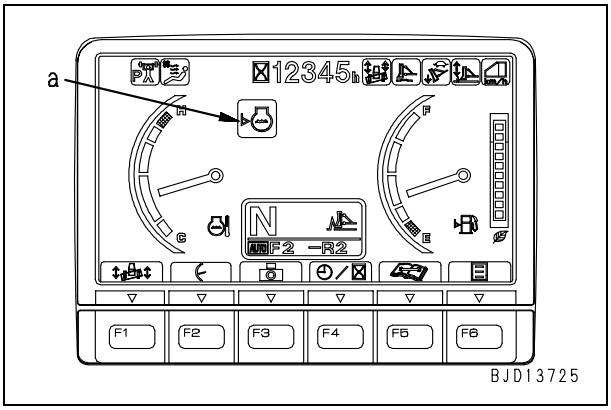

Display of action code and failure code

If an abnormality which displays an action code and a failure code occurs on the ordinary screen or camera mode screen, all the information of the abnormality is displayed.

(a) : Action code (3 digits)
(b) : Failure code (5 or 6 digits)
(c) : Telephone mark
(d) : Telephone No.

★ This screen is displayed only when an abnormality (failure code) for which an action code is set occurs.

★ The telephone mark and telephone No. are displayed only when the telephone No. is registered in the service mode.

★ If multiple abnormalities occur simultaneously, all the codes are displayed repeatedly in order.

★ Since the information of the displayed failure code is recorded in the fault history in the service mode, check the details in the service mode.

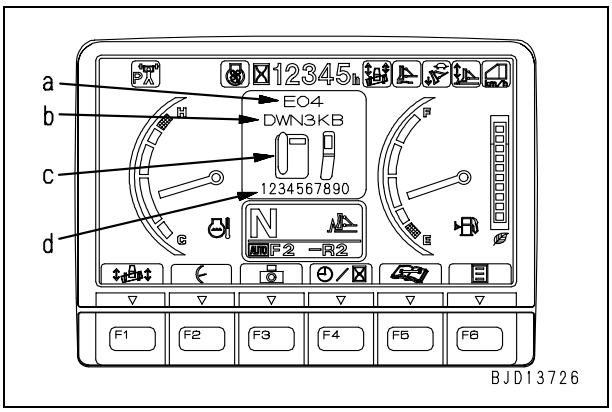

★ Remedies given by displayed action codes to operator to take (The following table is an excerpt from the Operation and Maintenance Manual)

Action code	Method of indicating trouble	Examples of trouble	Remedy given to operator to take
E01	• Action code and failure code are displayed.	• Backup alarm does not sound. • Fan speed is kept at maximum.	• Although all or a part of automatic function stops, machine can be operated. • Ask your Komatsu distributor for repair.
E02	• Action code and failure code are displayed. • Alarm buzzer sounds.	• Gear is not shifted up or down. • Engine boost pressure is abnormal. • Exhaust gas color is bad when temperature is low.	• If operator stops and restarts engine, machine can be operated without limiting any function. Operator must take care, however. • Ask your Komatsu distributor for repair.
E03	• Action code and failure code are displayed. • Telephone No. is displayed (if set). • Alarm buzzer sounds.	• Engine coolant temperature sensor is abnormal. • Usable gear speeds are limited. • Engine speed does not rise to maximum. • Gearshift shock is increased. • Steering performance lowers. • Braking shock is increased.	• Move machine to safe place. • Ask your Komatsu distributor for repair.
E04	• Action code and failure code are displayed. • Telephone No. is displayed (if set). • Alarm buzzer sounds.	• Engine cannot be controlled. • Machine cannot travel. • Machine stops.	• Stop machine immediately. • Ask your Komatsu distributor for repair.

Function of checking display of LCD (Liquid Crystal Display)

While the ordinary screen is displayed, if the following numeral input switch and function switch are operated as follows, all the LCD (Liquid Crystal Display) lights up in white.

- Operation of switches (simultaneous): [4] + [F2]
- ★ When finishing the operation of the switches, release [F2] first.
- ★ If there is a display error in the LCD, only that part is indicated in black.
- ★ The LCD panel sometimes has black points (points which are not lighted) and bright points (points which do not go off) for the reason of its characteristics. If the number of the bright points and black points does not exceed 10, those points are not a failure or a defect.
- ★ To return to the former screen, press the function switch.

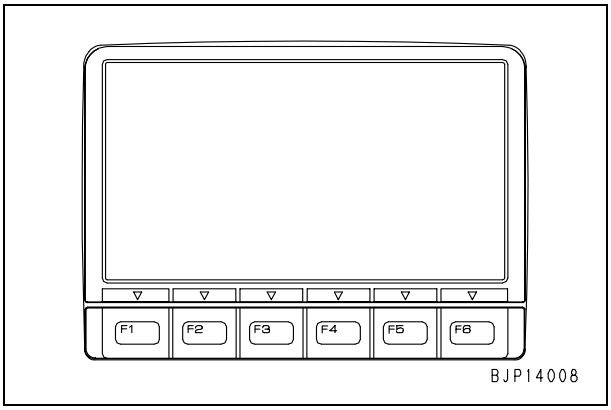

Function of checking service meter

To check the service meter while the starting switch is turned OFF, operate the numeral input switches as follows. At this time, only the service meter section displays.

- Operation of switches (simultaneous): [4] + [1]
- ★ Since there is some time lag in start of the LCD, hold down the switches until the LCD displays normally.
- ★ After the machine monitor is used continuously, blue points (points which do not go off) may be seen on this screen. This phenomenon does not indicate a failure or a defect.

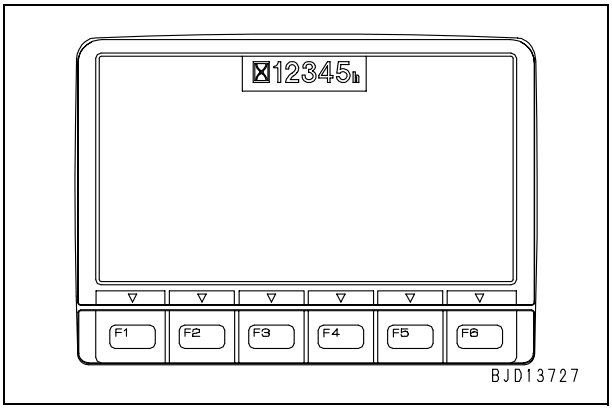

Function of changing maintenance password

When changing the maintenance password used for the maintenance setting function, follow these procedures.

1. While the ordinary screen is displayed, perform the following operation with the numeral input switches.
   - Operation of switches (While pressing [4], perform the operation in order):
     [4] + [5] → [5] → [5]
   - ★ This operation of the switches is not accepted until 10 minutes pass after the starting switch is turned on.

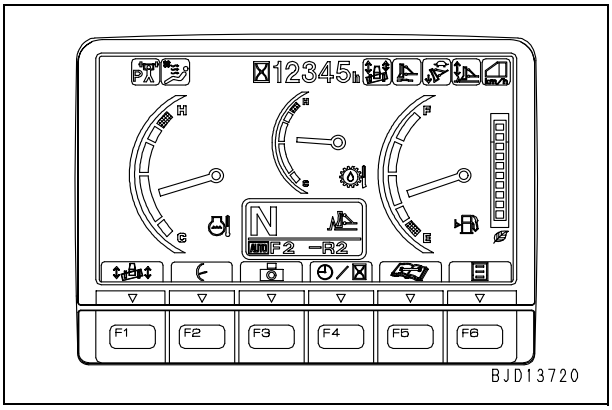

2. After the "Password" screen is displayed, input the current password with the numeral input switches and confirm it with the function switch.
   - [F5]: Delete input numeral/Return to ordinary screen
   - [F6]: Confirm input numeral
   - ★ Default password: [000000]
   - ★ If the input password is correct, the screen changes to the next screen.
   - ★ If the input password is incorrect, the message to input the password again is displayed.

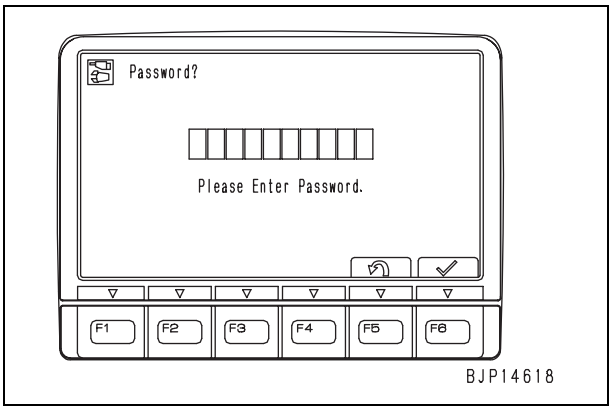

3. After the "New Password" screen is displayed, input a new password with the numeral input switches and confirm it with the function switch.
   - ★ Set a new password of 4 – 6 digits (If it has only 3 or less digits or has 7 or more digits, it is not accepted).
   - [F5]: Delete input numeral/Return to ordinary screen
   - [F6]: Confirm input numeral

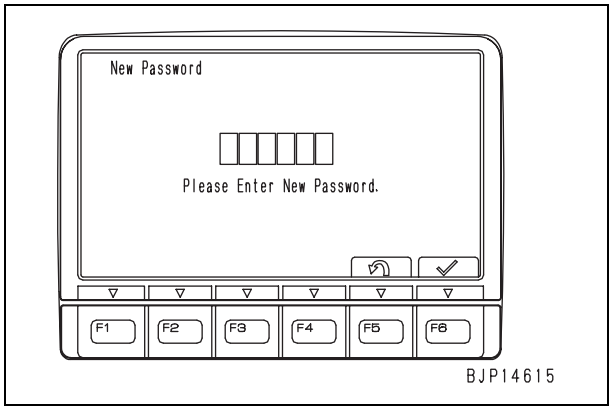

4. After the "New Password" screen is displayed again, input a new password again with the numeral input switches and confirm it with the function switch.
   - [F5]: Delete input numeral/Return to ordinary screen
   - [F6]: Confirm input numeral
   - ★ If a password different from the password input before is input, the message to input again is displayed.

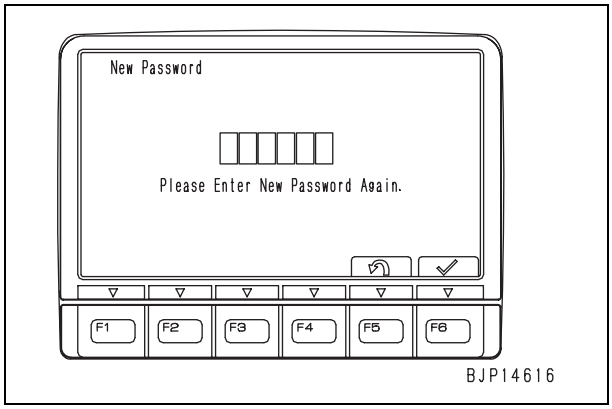

5. If the screen to notify completion of setting is displayed and then the ordinary screen is displayed, the password is changed successfully.

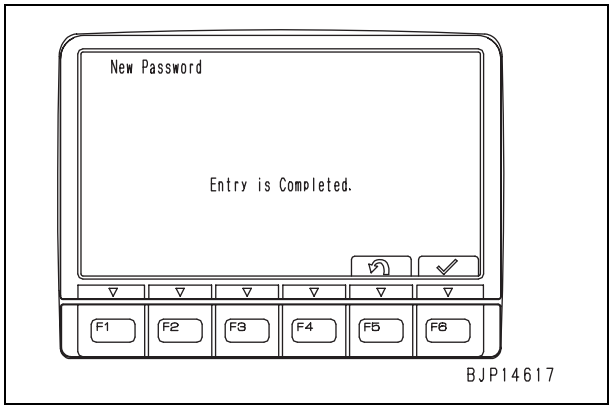

■ **Service mode**

To change the operator mode to the service mode, perform the following operation.
This operation is always required when you use the service mode.

1. Check of display of screen and operation of switches
   While the ordinary screen is displayed, perform the following operation with the numeral input switches.
   - Operation of switches (While pressing [4], perform the operation in order):
     [4] + [1] → [2] → [3]
   - ★ This operation of the switches is accepted only while the ordinary screen is displayed.

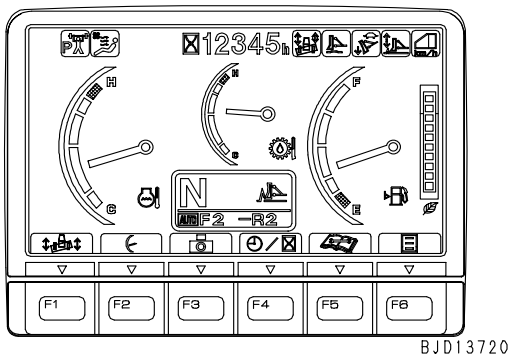

2. Selection of service menu
   When the "Service Menu" screen is displayed, the service mode is selected. Select a service menu you use with the function switches or numeral input switches.
   - [F3]: Move to lower menu
   - [F4]: Move to upper menu
   - [F5]: Return to ordinary screen (operator mode)
   - [F6]: Confirm selection
   - ★ You may enter a 2-digit code with the numeral input switches to select the menu of that code and confirm it with [F6].

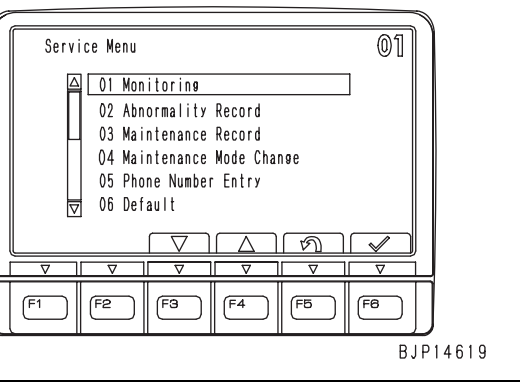

★ The items which can be selected in the service menu are as follows.

01 Monitoring	
02 Abnormality Record	Mechanical system "Abnormality Record"
	Electrical system "Abnormality Record"
	Air conditioner "Abnormality Record"/ Heater "Abnormality Record"
03 Maintenance Record	
04 Maintenance Mode Change	
05 Phone Number Entry	
06 Default	Key-on Mode
	Setting of unit
	Setting of maintenance password
	Setting of camera
	Setting of ECO display
07 Adjustment	
08 PM CLINIC	
09 Cylinder Cut-Out	
10 No Injection	
11 Fuel Consumption	
12 KOMTRAX Settings	Terminal Status
	GPS & Communication Status
	Modem S/N
13 Service Message	

★ Items with 2-digit codes are the menus displayed on the Service menu screen. The items on their right are the menus on the next hierarchy.

Monitoring

The machine monitor can monitor the condition of the machine in real time by receiving signals from various switches, sensors, and actuators installed to many parts of the machine and the information from the controllers which are controlling switches, etc.

1. Selecting menu
   Select "01 Monitoring" on the "Service Menu" screen.

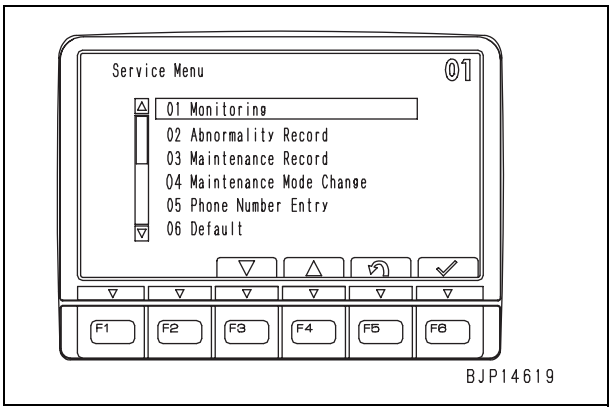

2. Selecting monitoring items
   After the "Monitoring" screen is displayed, select items to be monitored with the function switches or numeral input switches.
   - [F1]: Move to next page (screen)
   - [F2]: Move to previous page (screen)
   - [F3]: Move to lower item
   - [F4]: Move to upper item
   - [F5]: Delete input numeral/Return to service menu screen
   - [F6]: Confirm selection
   - ★ Selection with function switches: Select an item with [F3] or [F4] and confirm it with [F6].
   - ★ Selection with numeral input switches: Enter a 5-digit code, and the item of that code is selected directly. Confirm that item with [F6].
   - ★ If the color of the selected box changes from yellow to red, selection of the item of that box is confirmed.
   - ★ Up to 6 monitoring items can be selected at a time. You may not able to set up to 6 items, however, depending on the display form of those items.

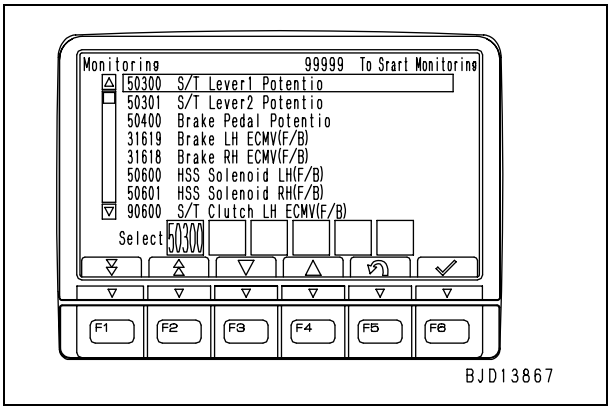

3. Deciding monitoring items
   After selecting monitoring items, execute monitoring with the function switch or numeral input switch.
   - ★ Execution with function switch: Double-click or hold down [F6] (about 2 seconds).
   - ★ Execution with numeral input switch: Input [99999] and press [F6].
   - ★ When monitoring only 2 items, for example, select them and confirm with [F6]. If [F6] is pressed once more at this time, monitoring is executed.
   - ★ If monitoring items are selected up to the limit number, monitoring is executed automatically.

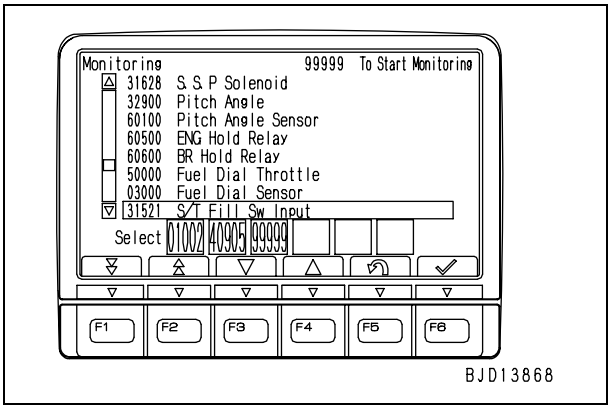

4. Executing monitoring
   After the "Monitoring" screen is displayed, perform the necessary operation of the machine and check the monitoring information.
   ★ Monitoring information is indicated by value, ON/OFF, or special display.
   ★ The unit of display can be set to SI unit, metric unit, or inch unit with the Default function in the service mode.

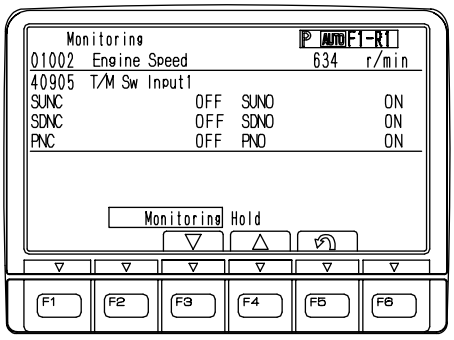

5. Holding monitoring information
   The monitoring information can be held and holding is reset with the function switches.
   - [F3]: Reset holding
   - [F4]: Hold information (displayed data)
   - [F5]: Return to monitoring selection menu screen

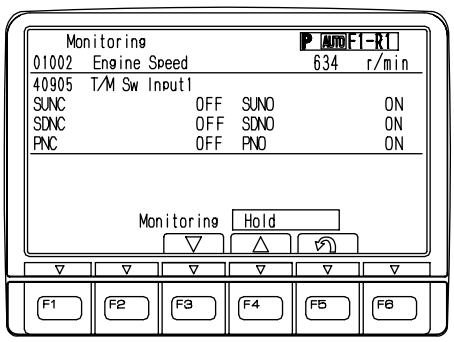

6. Changing machine setting mode
   To change the setting of the "P/E Mode", "Fan Rev." mode, or "Working" mode during monitoring, operate the corresponding switch under the current condition, and the mode setting screen is displayed.
   While this screen is displayed, if the corresponding switch is operated further, the corresponding mode is changed.
   ★ After finishing changing the setting, press [F6] to return to the monitoring information screen.
   ★ If the setting is changed during monitoring, the new setting is held even after the screen returns to the ordinary screen after monitoring is finished.

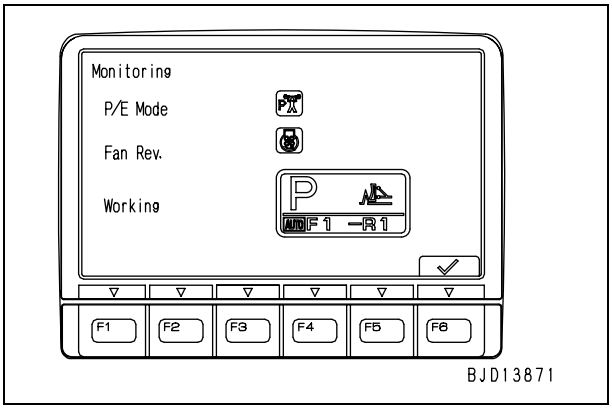

Monitoring items list

Code No.	Monitoring item (Display on screen)		Unit (Initial setting: ISO)			Component in charge	Remarks
			ISO	meter	inch		
50300	S/T Lever 1 Potentio		mV	mV	mV	P/T	
50301	S/T Lever 2 Potentio		mV	mV	mV	P/T	
50400	Brake Pedal Potentio		mV	mV	mV	P/T	
31619	Brake LH ECMV(F/B)		mA	mA	mA	P/T	
31618	Brake RH ECMV(F/B)		mA	mA	mA	P/T	
50600	HSS Solenoid LH(F/B)		mA	mA	mA	P/T	
50601	HSS Solenoid RH(F/B)		mA	mA	mA	P/T	
90600	S/T Clutch LH ECMV(F/B)		mA	mA	mA	P/T	
90601	S/T Clutch RH ECMV(F/B)		mA	mA	mA	P/T	
31628	S.S.P Solenoid		mA	mA	mA	P/T	
32900	Pitch Angle		°	°	°	P/T	
60100	Pitch Angle Sensor		mV	mV	mV	P/T	
60500	ENG Hold Relay		mV	mV	mV	P/T	
60600	BR Hold Relay		mV	mV	mV	P/T	
50000	Fuel Dial Throttle		%	%	%	P/T	
03000	Fuel Dial Sensor		mV	mV	mV	P/T	
31521	S/T Fill Sw Input	BL (Left brake fill sw)	ON • OFF			P/T	
		CL (Left clutch fill sw)	ON • OFF			P/T	
		CR (Right clutch fill sw)	ON • OFF			P/T	
		BR (Right brake fill sw)	ON • OFF			P/T	
50200	T/M Lever 1 Potentio		mV	mV	mV	P/T	
50201	T/M Lever 2 Potentio		mV	mV	mV	P/T	
31622	T/M Clutch F ECMV(F/B)		mA	mA	mA	P/T	
31616	T/M Clutch R ECMV(F/B)		mA	mA	mA	P/T	
31602	T/M Clutch 1st ECMV(F/B)		mA	mA	mA	P/T	
31603	T/M Clutch 2nd ECMV(F/B)		mA	mA	mA	P/T	
31604	T/M Clutch 3rd ECMV(F/B)		mA	mA	mA	P/T	
30100	T/C Oil Temperature		C	C	F	P/T	
31400	T/M Out Speed		r/min	rpm	rpm	P/T	
32601	T/C In Pressure		MPa	kg/cm²	psi	P/T	
32602	T/C In Pressure Sensor		mV	mV	mV	P/T	
32603	T/C Out Pressure		MPa	kg/cm²	psi	P/T	
32604	T/C Out Pressure Sensor		mV	mV	mV	P/T	
31642	L/U ECMV(F/B)		mA	mA	mA	P/T	
90700	S/C ECMV(F/B)		mA	mA	mA	P/T	
50900	T/M Lock Relay		mV	mV	mV	P/T	
40001	Vehicle Speed		km/h	km/h	MP/h	P/T	
60000	Traction		W	W	W	P/T	

Code No.	Monitoring item (Display on screen)		Unit (Initial setting: ISO)			Component in charge	Remarks
			ISO	meter	inch		
70200	T/M Out Speed Sensor		mV	mV	mV	P/T	
70400	Back Alarm Relay		mV	mV	mV	P/T	
31624	Fan Pump Solenoid(F/B)		mA	mA	mA	P/T	
10000	Fan Speed		r/min	rpm	rpm	P/T	
40905	T/M Sw Input 1	SUNC (Gear shift up sw)	ON • OFF			P/T	
		SUNO (Gear shift up sw)	ON • OFF			P/T	
		SDNC (Gear shift down sw)	ON • OFF			P/T	
		SDNO (Gear shift down sw)	ON • OFF			P/T	
		PNC (Parking brake lever sw)	ON • OFF			P/T	
		PNO (Parking brake lever sw)	ON • OFF			P/T	
40906	T/M Fill Sw Input 1	F (F clutch fill sw)	ON • OFF			P/T	
		R (R clutch fill sw)	ON • OFF			P/T	
		1st (1st clutch fill sw)	ON • OFF			P/T	
		2nd (2nd clutch fill sw)	ON • OFF			P/T	
		3rd (3rd clutch fill sw)	ON • OFF			P/T	
31520	T/M Fill Sw Input 2	L/U(Lock-up clutch fill sw)	ON • OFF			P/T	
		S/C (Stator clutch fill sw)	ON • OFF			P/T	
40909	T/M Output 1	Brly (Back Alarm relay)	ON • OFF			P/T	
		Prly (Parking lock relay)	ON • OFF			P/T	
		Fres (Fan reverse solenoid)	ON • OFF			P/T	
70700	Hydraulic Pump Pressure 1		MPa	kg/cm²	psi	W/E	
70701	Hydraulic Pressure Sensor 1		mV	mV	mV	W/E	
71001	Blade Raise EPC(F/B)		mA	mA	mA	W/E	
71003	Blade Down EPC(F/B)		mA	mA	mA	W/E	
71005	Blade Tilt LH-H EPC(F/B)		mA	mA	mA	W/E	
71007	Blade Tilt LH-B EPC(F/B)		mA	mA	mA	W/E	
90800	Blade Tilt RH-H EPC(F/B)		mA	mA	mA	W/E	
90801	Blade Tilt RH-B EPC(F/B)		mA	mA	mA	W/E	
71101	Ripper Raise EPC(F/B)		mA	mA	mA	W/E	
71103	Ripper Down EPC(F/B)		mA	mA	mA	W/E	
71105	Ripper Tilt In EPC(F/B)		mA	mA	mA	W/E	
71107	Ripper Tilt Back EPC(F/B)		mA	mA	mA	W/E	
73400	Blade Lift Lever A Potentio		mV	mV	mV	W/E	
73401	Blade Lift Lever B Potentio		mV	mV	mV	W/E	
73500	Blade Tilt Lever A Potentio		mV	mV	mV	W/E	

Code No.	Monitoring item (Display on screen)		Unit (Initial setting: ISO)			Component in charge	Remarks
			ISO	meter	inch		
73501	Blade Tilt Lever B Potentio		mV	mV	mV	W/E	
73600	Ripper Tilt Lever A Potentio		mV	mV	mV	W/E	
73601	Ripper Tilt Lever B Potentio		mV	mV	mV	W/E	
73700	Ripper Lift Lever A Potentio		mV	mV	mV	W/E	
73701	Ripper Lift Lever B Potentio		mV	mV	mV	W/E	
01300	TVC Solenoid(F/B)		mA	mA	mA	W/E	
90900	Quick Drop Solenoid(F/B)		mA	mA	mA	W/E	
70300	Blade Sw Input	FLNC (Blade float sw)	ON • OFF			W/E	
		FLNO (Blade float sw)	ON • OFF			W/E	
		BPNC (Blade pitch sw)	ON • OFF			W/E	
		BPNO (Blade pitch sw)	ON • OFF			W/E	
		WLNC (Work equipment lock sw)	ON • OFF			W/E	
		WLNO (Work equipment lock sw)	ON • OFF			W/E	
20227	Monitor Ass'y P/N		—			MON	
20402	Monitor Serial No		—			MON	
20228	Monitor Prog P/N		—			MON	
20242	P/T Con Ass'y P/N		—			P/T	
20404	P/T Con Serial No		—			P/T	
20243	P/T Con Prog P/N		—			P/T	
20244	W/E Con Ass'y P/N		—			W/E	
20405	W/E Con Serial No		—			W/E	
20245	W/E Con Prog P/N		—			W/E	
04200	Fuel Level Sensor Volt		V	V	V	MON	
04300	Battery Charge Volt		V	V	V	MON	
04401	Hyd Oil Temperature		C	C	F	MON	
04002	Hyd Temp Sens Volt		V	V	V	MON	
18900	ECM Internal Temp		C	C	F	ENG	
37200	Engine Oil Pressure		kPa	kg/cm²	psi	ENG	
00201	Machine ID		—			ENG	
20216	ECM Build Version		—			ENG	
20217	ECM Calibration Data Ver		—			ENG	
20400	ECM Serial No		—			ENG	
01002	Engine Speed		r/min	rpm	rpm	ENG	
36700	Engine Torque Ratio		%	%	%	ENG	
31701	Throttle Position		%	%	%	ENG	
03001	Throttle Pos Sens Volt		mV	mV	mV	ENG	
17500	Engine Power Mode		—			ENG	

Code No.	Monitoring item (Display on screen)		Unit (Initial setting: ISO)			Component in charge	Remarks
			ISO	meter	inch		
36400	Rail Pressure		MPa	kg/cm²	psi	ENG	
36401	Rail Pressure Sens Volt		V	V	V	ENG	
36200	Rail Press Command		MPa	kg/cm²	psi	ENG	
36300	Injection Timing Command		CA	CA	CA	ENG	
04107	Coolant Temperature		C	C	F	ENG	
01405	Coolant Temp Sens Volt		V	V	V	ENG	
37400	Ambient Pressure		kPa	kg/cm²	psi	ENG	
37401	Ambient Press Sens Volt		V	V	V	ENG	
36500	Charge Pressure-Abs		kPa	kg/cm²	psi	ENG	Indication by absolute value (including ambient pressure)
36501	Charge Press Sens Volt		V	V	V	ENG	
03203	Battery Power Supply		V	V	V	ENG	
37300	Fuel Rate		l/h	l/h	gal/h	ENG	
31706	Final Throttle Position		%	%	%	ENG	
18500	Charge Temperature		C	C	F	ENG	
18501	Charge Temp Sens Volt		V	V	V	ENG	
18600	Inject Fueling Command		mg/st	mg/st	mg/st	ENG	
17201	PCV Close Timing		CA	CA	CA	ENG	
18700	Engine Output Torque		Nm	kgm	lhft	ENG	
37201	Eng Oil Press Sens Volt		V	V	V	ENG	
14200	Fuel Temperature		C	C	F	ENG	
14201	Fuel Temp Sens Volt		V	V	V	ENG	
17903	EGR Inlet Pressure-A		kPa	kg/cm²	psi	ENG	
18001	EGR In Press Sens Volt		mV	mV	mV	ENG	
18100	EGR Valve Position		mm	mm	inch	ENG	
18101	EGR Valve Pos Sens Volt		mV	mV	mV	ENG	
18200	BPS Valve Position		mm	mm	inch	ENG	
18201	BPS Valve Pos Sens Volt		mV	mV	mV	ENG	
40912	P/T Sw Input	R-sig	ON • OFF			P/T	
		Acc	ON • OFF			P/T	
		Eng S	ON • OFF			P/T	
		Eng L	ON • OFF			P/T	
		Eng Sd	ON • OFF			P/T	

★ Entry order of items in table
The items are entered in the order of display on the monitoring selection menu screen.
★ Unit
The display unit can be set to ISO, meter, or inch freely (Set it with Unit in "Default" of the service menu).
"CA" in the display unit is an abbreviation for crankshaft angle.
"mg/st" in the display unit is an abbreviation for milligram/stroke.
★ Components in charge

MON : The machine monitor is in charge of detection of monitoring information.
ENG : The engine controller is in charge of detection of monitoring information.
P/T : The power train controller is in charge of detection of monitoring information.
W/E : The work equipment controller is in charge of detection of monitoring information.

"Abnormality Record" (Mechanical system "Abnormality Record")

The machine monitor classifies and records the abnormality which occurred in the past or which are occurring at present into the mechanical system abnormality, electrical system abnormality, and air conditioner abnormality or heater abnormality.
To check the mechanical system "Abnormality Record", perform the following procedures.

1. Selecting menu
   Select "02 Abnormality Record" on the "Service Menu" screen.

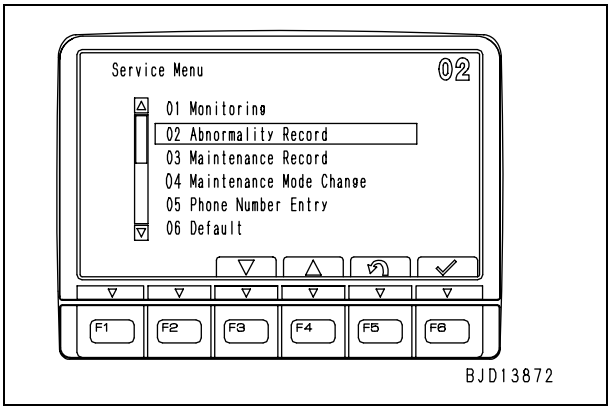

2. Selecting sub menu
   After the "Abnormality Record" screen is displayed, select "01 Mechanical Systems" with the function switches or numeral input switches.
   - [F3]: Move to lower record
   - [F4]: Move to upper record
   - [F5]: Return to service menu screen
   - [F6]: Confirm selection

   ★ You may enter a 2-digit code with the numeral input switches to select the record of that code and confirm it with [F6].

   ★ The following figure shows the display of the air conditioner specification. If the heater specification is selected, "03 Heater Abnormality Record" is displayed.

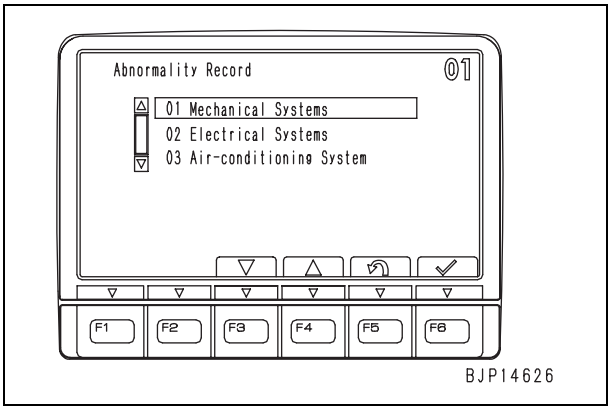

3. Information displayed on "Abnormality Record" screen
   On the "Mechanical Systems" screen, the following information is displayed.
   (a): Occurrence order of abnormality from latest one/Total number of records
   (b): Failure code
   (c): Contents of trouble
   (d): Number of occurrence time
   (e): Service meter reading at first occurrence
   (f): Service meter reach at last occurrence
   - [F1]: Move to next page (screen) (if displayed)
   - [F2]: Move to previous page (screen) (if displayed)
   - [F5]: Return to "Abnormality Record" screen

   ★ If no "Abnormality Record" is recorded, "No Abnormality Record" is displayed.

   ★ If the number of occurrence time is 1 (first occurrence), the service meter reading at the first occurrence and that at the last occurrence are the same.

   ★ If [E] is displayed on the left of a failure code, the abnormality is still occurring or resetting of it has not been confirmed.

   ★ For all the failure codes that the machine monitor can record, see the failure codes table in "Abnormality Record (Electrical system Abnormality Record)".

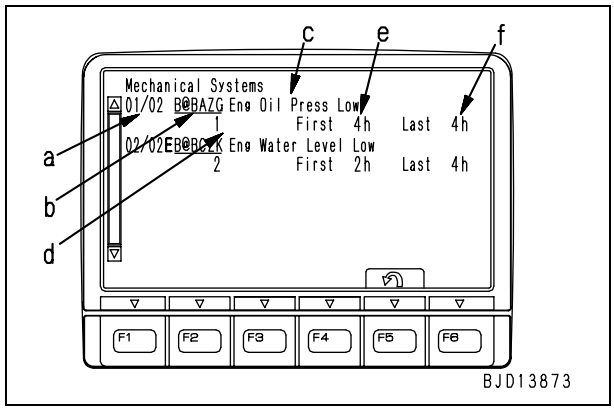

4. Deleting "Abnormality Record"
   The contents of the mechanical system "Abnormality Record" cannot be deleted.

"Abnormality Record" (Electrical system "Abnormality Record")

The machine monitor classifies and records the abnormality which occurred in the past or which are occurring at present into the mechanical system abnormality, electrical system abnormality, and air conditioner abnormality or heater abnormality.
To check the electrical system "Abnormality Record", perform the following procedures.

1. Selecting menu
   Select "02 Abnormality Record" on the "Service Menu" screen.

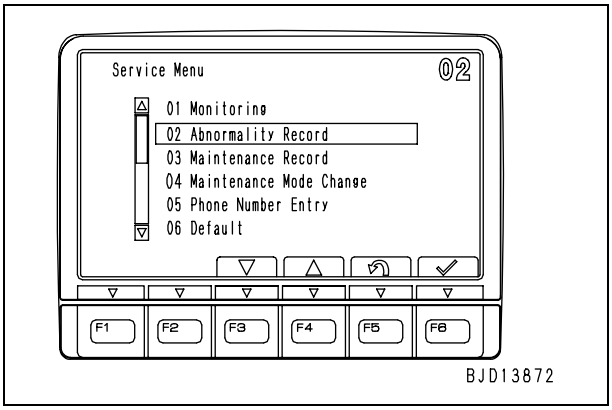

2. Selecting sub menu
   After the "Abnormality Record" screen is displayed, select "02 Electrical Systems" with the function switches or numeral input switches.
   - [F3]: Move to lower record
   - [F4]: Move to upper record
   - [F5]: Return to service menu screen
   - [F6]: Confirm selection
   - ★ You may enter a 2-digit code with the numeral input switches to select the record of that code and confirm it with [F6].
   - ★ The following figure shows the display of the air conditioner specification. If the heater specification is selected, "03 Heater Abnormality Record" is displayed.

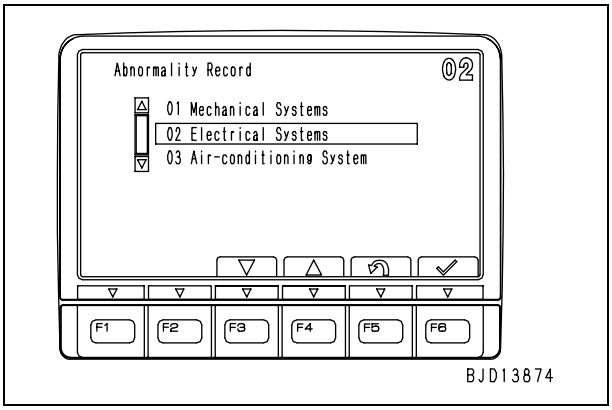

3. Information displayed on "Abnormality Record" screen
   On the "Electrical Systems" screen, the following information is displayed.
   (a): Occurrence order of abnormality from latest one/Total number of records
   (b): Failure code
   (c): Contents of trouble
   (d): Number of occurrence time
   (e): Service meter reading at first occurrence
   (f): Service meter reach at last occurrence
   - [F1]: Move to next page (screen) (if displayed)
   - [F2]: Move to previous page (screen) (if displayed)
   - [F3]: Move to lower record
   - [F4]: Move to upper record
   - [F5]: Return to "Abnormality Record" screen
   - ★ If no "Abnormality Record" is recorded, "No Abnormality Record" is displayed.
   - ★ If the number of occurrence time is 1 (first occurrence), the service meter reading at the first occurrence and that at the last occurrence are the same.
   - ★ If [E] is displayed on the left of a failure code, the abnormality is still occurring or resetting of it has not been confirmed.
   - ★ For all the failure codes that the machine monitor can record, see the failure codes table.

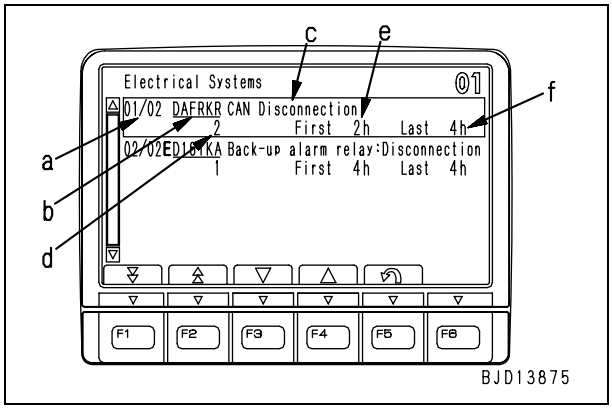

4. Deleting "Abnormality Record"
   1) While the "Electrical Systems" screen is displayed, perform the following operation with the numeral input switches.
      - Operation of switches (While pressing [4], perform the operation in order):
        [4] + [1] → [2] → [3]
      - ★ Operate the switches similarly to the procedure for changing the ordinary display to the service mode.

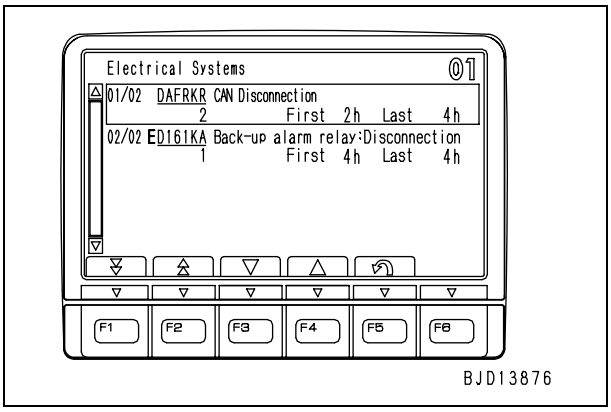

2) Check that the screen is set in the delete mode, and then delete the items one by one or together with the function switches.
   - ★ If the screen is set in the delete mode, [CLEAR] graphic mark is indicated at [F2].
   - [F2]: Delete all items
   - [F3]: Move to lower item
   - [F4]: Move to upper item
   - [F5]: Return to "Abnormality Record" screen
   - [F6]: Delete selected item
   - ★ To delete items one by one: Select the item to be deleted with [F3] or [F4] and press [F6].
   - ★ To delete all items together: Press [F2], and all the items are deleted, regardless of selection of the items.
   - ★ If [E] is displayed on the left of a failure code, the deleting operation is accepted but the information is not deleted.

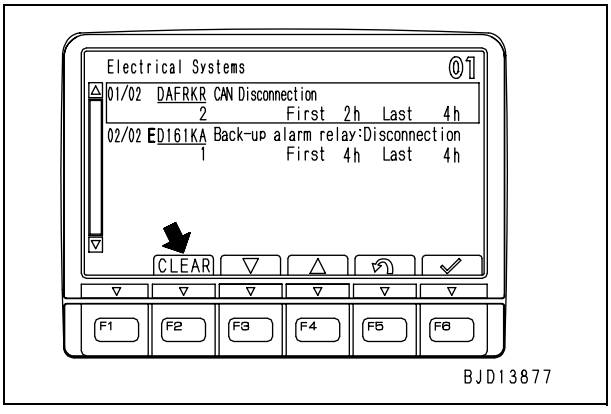

3) After the "Electrical Sys. Error Reset" screen is displayed, operate the function switches.
   - [F5]: Return to "Electrical Sys. Error Reset" screen (Delete mode)
   - [F6]: Execute deletion

★ The following figure shows the screen displayed when the items are deleted one by one (which is a little different from the screen displayed when all the items are deleted together).

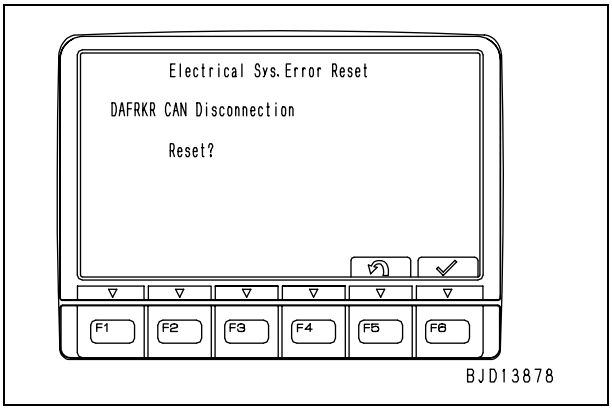

4) If the screen to notify completion of deletion is displayed and then the "Electrical Sys. Error Reset" (delete mode) screen is displayed, the deletion of the "Abnormality Record" is completed.
   - ★ After a while, the screen returns to the "Electrical Sys. Error Reset" screen.

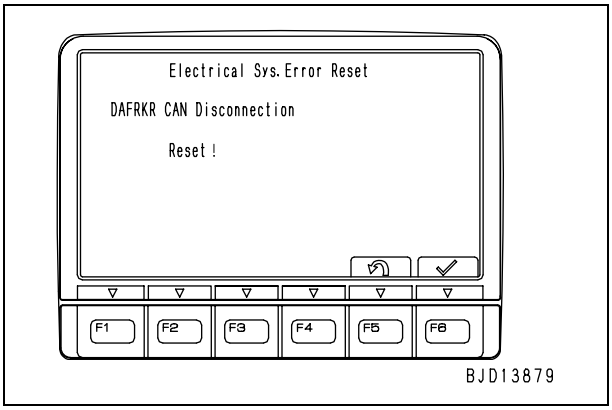

Failure codes table

Action code	Failure code	Trouble (Displayed on screen)	Alarm buzzer	Component in charge	Category of history
E03	**1500L0**	Transmission clutch: Abnormal	●	P/T	Electrical system
E03	**15SAL1**	Forward clutch: Fill high	●	P/T	Electrical system
E03	**15SALH**	Forward clutch: Fill Low	●	P/T	Electrical system
E03	**15SBL1**	Reverse clutch: Fill high	●	P/T	Electrical system
E03	**15SBLH**	Reverse clutch: Fill Low	●	P/T	Electrical system
E03	**15SEL1**	Speed 1st clutch: Fill high	●	P/T	Electrical system
E03	**15SELH**	Speed 1st clutch: Fill Low	●	P/T	Electrical system
E03	**15SFL1**	Speed 2nd clutch: Fill high	●	P/T	Electrical system
E03	**15SFLH**	Speed 2nd clutch: Fill Low	●	P/T	Electrical system
E03	**15SGL1**	Speed 3rd clutch: Fill high	●	P/T	Electrical system
E03	**15SGLH**	Speed 3rd clutch: Fill Low	●	P/T	Electrical system
E02	**15SJL1**	L/U : Fill high	●	P/T	Electrical system
E02	**15SJLH**	L/U : Fill low	●	P/T	Electrical system
E04	**2301L1**	Right brake: Fill high	●	P/T	Electrical system
E04	**2301LH**	Right brake: Fill low	●	P/T	Electrical system
E04	**2302L1**	Left brake: Fill high	●	P/T	Electrical system
E04	**2302LH**	Left brake: Fill low	●	P/T	Electrical system
	7RFAKA	ECM HOLD RELAY: Disconnection		P/T	Electrical system
	AA10NX	Air Cleaner Clogging		MON	Mechanical system
	AB00MA	Battery Charge Abnormal		MON	Mechanical system
	B@BAZG	Eng Oil Press Low	▲	ENG	Mechanical system
	B@BCNS	Eng Water Overheat	▲	ENG	Mechanical system
	B@BCZK	Eng Water Level Low		MON	Mechanical system
	B@CENS	T/C Oil Overheat	▲	P/T	Mechanical system
	B@HANS	Hyd Oil Overheat	▲	MON	Mechanical system
E04	**CA111**	EMC Critical Internal Failure	●	ENG	Electrical system
E04	**CA115**	Eng Ne and Bkup Speed Sens Error	●	ENG	Electrical system
E03	**CA122**	Chg Air Press Sensor High Error	●	ENG	Electrical system
E03	**CA123**	Chg Air Press Sensor Low Error	●	ENG	Electrical system
E03	**CA131**	Throttle Sensor High Error	●	ENG	Electrical system
E03	**CA132**	Throttle Sensor Low Error	●	ENG	Electrical system
E02	**CA135**	Eng Oil Press Sensor High Error	●	ENG	Electrical system
E02	**CA141**	Eng Oil Press Sensor Low Error	●	ENG	Electrical system
E02	**CA144**	Coolant Temp Sens High Error	●	ENG	Electrical system
E02	**CA145**	Coolant Temp Sens Low Error	●	ENG	Electrical system
E01	**CA153**	Chg Air Temp Sensor High Error		ENG	Electrical system

Action code	Failure code	Trouble (Displayed on screen)	Alarm buzzer	Component in charge	Category of history
E01	**CA154**	Chg Air Temp Sensor Low Error		ENG	Electrical system
E03	**CA187**	Sens Supply 2 Volt Low Error	●	ENG	Electrical system
E03	**CA221**	Ambient Press Sens High Error	●	ENG	Electrical system
E03	**CA222**	Ambient Press Sens Low Error	●	ENG	Electrical system
E03	**CA227**	Sens Supply 2 Volt High Error	●	ENG	Electrical system
E03	**CA234**	Eng Overspeed		ENG	Electrical system
E03	**CA238**	Ne Speed Sens Supply Volt Error	●	ENG	Electrical system
E01	**CA263**	Fuel Temp Sensor High Error		ENG	Electrical system
E01	**CA265**	Fuel Temp Sensor Low Error		ENG	Electrical system
E03	**CA271**	PCV1 Short Error	●	ENG	Electrical system
E03	**CA272**	PCV1 Open Error	●	ENG	Electrical system
E03	**CA273**	PCV2 Short Error	●	ENG	Electrical system
E03	**CA274**	PCV2 Open Error	●	ENG	Electrical system
E03	**CA322**	Inj #1 (L#1) Open/Short Error	●	ENG	Electrical system
E03	**CA323**	Inj #5 (L#5) Open/Short Error	●	ENG	Electrical system
E03	**CA324**	Inj #3 (L#3) Open/Short Error	●	ENG	Electrical system
E03	**CA325**	Inj #6 (L#6) Open/Short Error	●	ENG	Electrical system
E03	**CA331**	Inj #2 (L#2) Open/Short Error	●	ENG	Electrical system
E03	**CA332**	Inj #4 (L#4) Open/Short Error	●	ENG	Electrical system
E04	**CA342**	Calibration Code Incompatibility	●	ENG	Electrical system
E03	**CA351**	Injectors Drive Circuit Error	●	ENG	Electrical system
E03	**CA352**	Sens Supply 1 Volt Low Error	●	ENG	Electrical system
E03	**CA386**	Sens Supply 1 Volt High Error	●	ENG	Electrical system
E04	**CA441**	Battery Voltage Low Error	●	ENG	Electrical system
E04	**CA442**	Battery Voltage High Error	●	ENG	Electrical system
E03	**CA449**	Rail Press Very High Error	●	ENG	Electrical system
E03	**CA451**	Rail Press Sensor High Error	●	ENG	Electrical system
E03	**CA452**	Rail Press Sensor Low Error	●	ENG	Electrical system
E02	**CA553**	Rail Press High Error	●	ENG	Electrical system
E03	**CA554**	Rail Press Sensor In Range Error	●	ENG	Electrical system
E02	**CA559**	Rail Press Low Error	●	ENG	Electrical system
E03	**CA689**	Eng Ne Speed Sensor Error	●	ENG	Electrical system
E03	**CA731**	Eng Bkup Speed Sens Phase Error	●	ENG	Electrical system
E04	**CA757**	All Continuous Data Lost Error	●	ENG	Electrical system
E03	**CA778**	Eng Bkup Speed Sensor Error	●	ENG	Electrical system
E02	**CA1228**	EGR Valve Servo Error 1	●	ENG	Electrical system
E03	**CA1625**	EGR Valve Servo Error 2	●	ENG	Electrical system

Action code	Failure code	Trouble (Displayed on screen)	Alarm buzzer	Component in charge	Category of history
E03	**CA1626**	BP Valve Sol Current High Error	●	ENG	Electrical system
E03	**CA1627**	BP Valve Sol Current Low Error	●	ENG	Electrical system
E02	**CA1628**	Bypass Valve Servo Error 1	●	ENG	Electrical system
E03	**CA1629**	Bypass Valve Servo Error 2	●	ENG	Electrical system
E03	**CA1631**	BP Valve Pos Sens High Error	●	ENG	Electrical system
E03	**CA1632**	BP Valve Pos Sens Low Error	●	ENG	Electrical system
E03	**CA1633**	KOMNET Datalink Timeout Error	●	ENG	Electrical system
E01	**CA1642**	EGR Inlet Press Sens Low Error		ENG	Electrical system
E01	**CA1653**	EGR Inlet Press Sens High Error		ENG	Electrical system
E03	**CA2185**	Throt Sens Sup Volt High Error	●	ENG	Electrical system
E03	**CA2186**	Throt Sens Sup Volt Low Error	●	ENG	Electrical system
E03	**CA2249**	Rail Press Very Low Error	●	ENG	Electrical system
E03	**CA2271**	EGR Valve Pos Sens High Error	●	ENG	Electrical system
E03	**C2272**	EGR Valve Pos Sens Low Error	●	ENG	Electrical system
E03	**CA2351**	EGR Valve Sol Current High Error	●	ENG	Electrical system
E03	**CA2352**	EGR Valve Sol Current Low Error	●	ENG	Electrical system
E01	**CA2555**	Grid Htr Relay Volt Low Error		ENG	Electrical system
E01	**CA2256**	Grid Htr Relay Volt High Error		ENG	Electrical system
	D110KA	Battery relay: Disconnection		P/T	Electrical system
	D110KB	Battery Relay: Drive Short Circuit		P/T	Electrical system
E02	**D130KA**	Neutral relay: Disconnection	●	P/T	Electrical system
E02	**D130KB**	Neutral relay: Short circuit	●	P/T	Electrical system
E01	**D161KA**	Back-up alarm relay: Disconnection		P/T	Electrical system
E01	**D161KB**	Back-up alarm relay: Short circuit		P/T	Electrical system
	D190KA	ACC signal relay: Disconnection		P/T	Electrical system
	D190KB	ACC signal relay: Short circuit		P/T	Electrical system
E03	**D5ZKKX**	Throttle Dial: Out of normal range	●	P/T	Electrical system
E03	**DAFRKR**	CAN Disconnection	●	MON	Electrical system
E03	**DB2RKR**	CAN Disconnection	●	ENG	Electrical system
E04	**DB90KK**	WE controller: Source voltage reduction	●	W/E	Electrical system
E03	**DB90KR**	PT controller: Can communication lost	●	P/T	Electrical system
E01	**DB90KT**	WE controller: Abnormality in controller		W/E	Electrical system
E03	**DB95KK**	WE controller: Source voltage reduction	●	W/E	Electrical system
E03	**DB97KK**	WE controller: Source voltage reduction	●	W/E	Electrical system
E04	**DB99KQ**	WE controller: Type select signal	●	W/E	Electrical system
E03	**DB9RKR**	WE controller: Can communication lost	●	W/E	Electrical system
E03	**DBE0KK**	PT controller: Source voltage reduction	●	P/T	Electrical system

Action code	Failure code	Trouble (Displayed on screen)	Alarm buzzer	Component in charge	Category of history
E01	**DBE0KT**	PT controller: Abnormality in controller		P/T	Electrical system
E02	**DBE6KK**	PT controller: Source voltage reduction	●	P/T	Electrical system
E02	**DBE7KK**	PT controller: Source voltage reduction	●	P/T	Electrical system
E04	**DBE9KQ**	PT controller: Type select signal	●	P/T	Electrical system
E02	**DD12KA**	Shift up Sw: Disconnection	●	P/T	Electrical system
E02	**D12KB**	Shift up Sw: Short circuit	●	P/T	Electrical system
E02	**D13KA**	Shift down Sw: Disconnection	●	P/T	Electrical system
E02	**DD13KB**	Shift down Sw: Short circuit	●	P/T	Electrical system
E03	**DD14KA**	Parking lever Sw: Disconnection	●	P/T	Electrical system
E03	**DD14KB**	Parking lever Sw: Short circuit	●	P/T	Electrical system
E02	**DDDDKA**	Back up brake Sw: Disconnection	●	P/T	Electrical system
E02	**DDDDKB**	Back up brake Sw: Short circuit	●	P/T	Electrical system
E02	**DDDDKX**	Back up brake Sw: Signal mismatch	●	P/T	Electrical system
E02	**DDN7KA**	WEQ Knob Sw(down): Disconnection	●	W/E	Electrical system
E02	**DDN7KB**	WEQ Knob Sw(down): Short circuit	●	W/E	Electrical system
E01	**DDN9KA**	WEQ Knob Sw(up): Disconnection		W/E	Electrical system
E01	**DDN9KB**	WEQ Knob Sw(up): Short circuit		W/E	Electrical system
E03	**DDNLKA**	Weq lock Sw: Disconnection	●	W/E	Electrical system
E03	**DDNLKB**	Weq lock Sw: Short circuit	●	W/E	Electrical system
E02	**DDTSL1**	S/C: Fill high	●	P/T	Electrical system
E02	**DDTSLH**	S/C: Fill low	●	W/E	Electrical system
E03	**DFA4KX**	BL lever 1: Out of normal range	●	W/E	Electrical system
E03	**DFA4KZ**	BL lever: Disconnection or short circuit	●	W/E	Electrical system
E03	**DFA4L8**	BL lever: Signal mismatch	●	W/E	Electrical system
E03	**DFA5KA**	BL lever 1: Disconnection	●	W/E	Electrical system
E03	**DFA5KB**	BL lever 1: Short circuit	●	W/E	Electrical system
E03	**DFA6KA**	BL lever 2: Disconnection	●	W/E	Electrical system
E03	**DFA6KB**	BL lever 2: Short circuit	●	W/E	Electrical system
E03	**DFA7KX**	BT lever 1: Out of normal range	●	W/E	Electrical system
E03	**DFA7KZ**	BT lever: Disconnection or short circuit	●	W/E	Electrical system
E03	**DFA7L8**	BT lever: Signal mismatch	●	W/E	Electrical system
E03	**DFA8KA**	BT lever 1: Disconnection	●	W/E	Electrical system
E03	**DFA8KB**	BT lever 1: Short circuit	●	W/E	Electrical system
E03	**DFA9KA**	BT lever 2: Disconnection	●	W/E	Electrical system
E03	**DFA9KB**	BT lever 2: Short circuit	●	W/E	Electrical system
E03	**DFAAKX**	RL lever 1: Out of normal range	●	W/E	Electrical system
E03	**DFAAKZ**	RL lever: Disconnection or short circuit	●	W/E	Electrical system

Action code	Failure code	Trouble (Displayed on screen)	Alarm buzzer	Component in charge	Category of history
E03	**DFAAL8**	RL lever: Signal mismatch	●	W/E	Electrical system
E03	**DFABKA**	RL lever 1: Disconnection	●	W/E	Electrical system
E03	**DFABKB**	RL lever 1: Short circuit	●	W/E	Electrical system
E03	**DFACKA**	RL lever 2: Disconnection	●	W/E	Electrical system
E03	**DFACKB**	RL lever 2: Short circuit	●	W/E	Electrical system
E03	**DFADKX**	RT lever 1: Out of normal range	●	W/E	Electrical system
E03	**DFADKZ**	RT lever: Disconnection or short circuit	●	W/E	Electrical system
E03	**DFADL8**	RT lever: Signal mismatch	●	W/E	Electrical system
E03	**DFAEKA**	RT lever 1: Disconnection	●	W/E	Electrical system
E03	**DFAEKB**	RT lever 1: Short circuit	●	W/E	Electrical system
E03	**DFAFKA**	RT lever 2: Disconnection	●	W/E	Electrical system
E03	**DFAFKB**	RT lever 2: Short circuit	●	W/E	Electrical system
E01	**DGT1KA**	T/C oil temp sensor: Abnormal		P/T	Electrical system
E01	**DGT1KX**	T/C oil temp sensor abnormal		P/T	Electrical system
	DH21KA	WEQ pressure sensor: Disconnection		W/E	Electrical system
	DH21KB	WEQ pressure sensor: Short circuit		W/E	Electrical system
E02	**DHT5KA**	T/C in-pressure sensor: Disconnection	●	P/T	Electrical system
E02	**DHT5KB**	T/C in-pressure sensor: Short circuit	●	P/T	Electrical system
E02	**DHT7KA**	T/C out-pressure sensor: Disconnection	●	P/T	Electrical system
E02	**DHT7KB**	T/C out-pressure sensor: Short circuit	●	P/T	Electrical system
E03	**DK10KX**	Fuel control Dial: Out of normal range	●	P/T	Electrical system
E03	**DK30KA**	ST lever 1: Disconnection	●	P/T	Electrical system
E03	**DK30KB**	ST lever 1: Short circuit	●	P/T	Electrical system
E04	**DK30KX**	ST lever 1: Out of normal range	●	P/T	Electrical system
E04	**DK30KZ**	ST lever: Disconnection or short circuit	●	P/T	Electrical system
E03	**DK30L8**	ST lever: Signal mismatch	●	P/T	Electrical system
E03	**DK31KA**	ST lever 2: Disconnection	●	P/T	Electrical system
E03	**DK31KB**	ST lever 2: Short circuit	●	P/T	Electrical system
E03	**DK40KA**	Brake potentiometer: Disconnection	●	P/T	Electrical system
E03	**DK40KB**	Brake potentiometer: Short circuit	●	P/T	Electrical system
E04	**DK55KX**	FR lever: Out of normal range	●	P/T	Electrical system
E04	**DK55KZ**	FR lever: Disconnection or short circuit	●	P/T	Electrical system
E03	**DK55L8**	FR lever: Signal mismatch	●	P/T	Electrical system
E03	**DK56KA**	FR lever 1: Disconnection	●	P/T	Electrical system
E03	**DK56KB**	FR lever 1: Short circuit	●	P/T	Electrical system
E03	**DK57KA**	FR lever 2: Disconnection	●	P/T	Electrical system
E03	**DK57KB**	FR lever 2: Short circuit	●	P/T	Electrical system

Action code	Failure code	Trouble (Displayed on screen)	Alarm buzzer	Component in charge	Category of history
E03	**DKH1KA**	Pitch angle sensor: Disconnection	●	P/T	Electrical system
E03	**DKH1KB**	Pitch angle sensor: Short circuit	●	P/T	Electrical system
E01	**DLT3KA**	T/M out-speed sensor: Disconnection	●	P/T	Electrical system
E01	**DLT3KB**	T/M out-speed sensor: Abnormal	●	P/T	Electrical system
E01	**DW7BKA**	Fan rev EPC: Disconnection	●	P/T	Electrical system
E01	**DW7BKB**	Fan rev EPC: Short circuit		P/T	Electrical system
E03	**DWN1KA**	Hss EPC1: Disconnection	●	P/T	Electrical system
E03	**DWN1KB**	Hss EPC1: Short circuit	●	P/T	Electrical system
E03	**DWN1KY**	Hss EPC1: Short circuit	●	P/T	Electrical system
E03	**DWN2KA**	Hss EPC2: Disconnection	●	P/T	Electrical system
E03	**DWN2KB**	Hss EPC2: Short circuit	●	P/T	Electrical system
E03	**DWN2KY**	Hss EPC2: Short circuit	●	P/T	Electrical system
E04	**DWN3KA**	Ssp solenoid: Disconnection	●	P/T	Electrical system
E04	**DWN3KB**	Ssp solenoid: Short circuit	●	P/T	Electrical system
E04	**DWN3KY**	SSP solenoid: Short circuit	●	P/T	Electrical system
E01	**DWN5KA**	Fan pump solenoid: Disconnection		P/T	Electrical system
E01	**DWN5KB**	Fan pump solenoid: Short circuit		W/E	Electrical system
E01	**DXA0KA**	TVC Sol.: Disconnection		W/E	Electrical system
E01	**DXA0KB**	TVC Sol.: Short circuit		W/E	Electrical system
E01	**DXA0KY**	TVC Sol.: Short circuit		P/T	Electrical system
E02	**DXH1KA**	Lock-up ECMV: Disconnection	●	P/T	Electrical system
E02	**DXH1KB**	Lock-up ECMV: Short circuit	●	P/T	Electrical system
E03	**DXH1KY**	Lock-up ECMV: Short circuit	●	P/T	Electrical system
E03	**DXH4KA**	1st clutch ECMV: Disconnection	●	P/T	Electrical system
E03	**DXH4KB**	1st clutch ECMV: Short circuit	●	P/T	Electrical system
E03	**DXH4KY**	1st clutch ECMV: Short circuit	●	P/T	Electrical system
E03	**DXH5KA**	2nd clutch ECMV: Disconnection	●	P/T	Electrical system
E03	**DXH5KB**	2nd clutch ECMV: Short circuit	●	P/T	Electrical system
E03	**DXH5KY**	2nd clutch ECMV: Short circuit	●	P/T	Electrical system
E03	**DXH6KA**	3rd clutch ECMV: Disconnection	●	P/T	Electrical system
E03	**DXH6KB**	3rd clutch ECMV: Short circuit	●	P/T	Electrical system
E03	**DXH6KY**	3rd clutch ECMV: Short circuit	●	P/T	Electrical system
E03	**DXH7KA**	R clutch ECMV: Disconnection	●	P/T	Electrical system
E03	**DXH7KB**	R clutch ECMV: Short circuit	●	P/T	Electrical system
E04	**DXH7KY**	R clutch ECMV: Short circuit	●	P/T	Electrical system
E03	**DXH8KA**	F clutch ECMV: Disconnection	●	P/T	Electrical system
E03	**DXH8KB**	F clutch ECMV: Short circuit	●	P/T	Electrical system

Action code	Failure code	Trouble (Displayed on screen)	Alarm buzzer	Component in charge	Category of history
E04	**DXH8KY**	F clutch ECMV: Short circuit	●	P/T	Electrical system
E04	**DXHBKA**	Right brake ECMV: Disconnection	●	P/T	Electrical system
E04	**DXHBKB**	Right brake ECMV: Short circuit	●	P/T	Electrical system
E04	**DXHBKY**	Right brake ECMV: Short circuit	●	P/T	Electrical system
E04	**DXHCKA**	Left brake ECMV: Disconnection	●	P/T	Electrical system
E04	**DXHCKB**	Left brake ECMV: Short circuit	●	P/T	Electrical system
E04	**DXHCKY**	Left brake ECMV: Short circuit	●	P/T	Electrical system
E03	**DXHRKA**	Blade up EPC: Disconnection	●	W/E	Electrical system
E03	**DXHRKB**	Blade up EPC: Short circuit	●	W/E	Electrical system
E03	**DXHRKY**	Blade up EPC: Short circuit	●	W/E	Electrical system
E03	**DXHSKA**	Blade down EPC: Disconnection	●	W/E	Electrical system
E03	**DXHSKB**	Blade down EPC: Short circuit	●	W/E	Electrical system
E03	**DXHSKY**	Blade down EPC: Short circuit	●	W/E	Electrical system
E03	**DXHTKA**	Blade left 1 EPC: Disconnection	●	W/E	Electrical system
E03	**DXHTKB**	Blade left 1 EPC: Short circuit	●	W/E	Electrical system
E03	**DXHTKY**	Blade left 1 EPC: Short circuit	●	W/E	Electrical system
E03	**DXHUKA**	Blade right 1 EPC: Disconnection	●	W/E	Electrical system
E03	**DXHUKB**	Blade right 1 EPC: Short circuit	●	W/E	Electrical system
E03	**DXHUKY**	Blade right 1 EPC: Short circuit	●	W/E	Electrical system
E03	**DXHWKA**	Ripper up EPC: Disconnection	●	W/E	Electrical system
E03	**DXHWKB**	Ripper up EPC: Short circuit	●	W/E	Electrical system
E03	**DXHWKY**	Ripper up EPC: Short circuit	●	W/E	Electrical system
E03	**DXHXKA**	Ripper down EPC: Disconnection	●	W/E	Electrical system
E03	**DXHXKB**	Ripper down EPC: Short circuit	●	W/E	Electrical system
E03	**DXHXKY**	Ripper down EPC: Short circuit	●	W/E	Electrical system
E03	**DXHYKA**	Ripper Tilt In EPC: Disconnection	●	W/E	Electrical system
E03	**DXHYKB**	Ripper Tilt In EPC: Short circuit	●	W/E	Electrical system
E03	**DXHYKY**	Ripper Tilt In EPC: Short circuit	●	W/E	Electrical system
E03	**DXHZKA**	Ripper Tilt Back EPC: Disconnection	●	W/E	Electrical system
E03	**DXHZKB**	Ripper Tilt Back EPC: Short circuit	●	W/E	Electrical system
E03	**DXHZKY**	Ripper Tilt Back EPC: Short circuit	●	W/E	Electrical system
E03	**DXJ4KA**	WEQ lock Sol.: Disconnection	●	W/E	Electrical system
E03	**DXJ4KB**	WEQ lock Sol.: Short circuit	●	W/E	Electrical system
E03	**DXJ8KA**	Blade left 2 EPC: Disconnection	●	W/E	Electrical system
E03	**DXJ8KB**	Blade left 2 EPC: Short circuit	●	W/E	Electrical system
E03	**DXJ8KY**	Blade left 2 EPC: Short circuit	●	W/E	Electrical system
E03	**DXJ9KA**	Blade right 2 EPC: Disconnection	●	W/E	Electrical system

Action code	Failure code	Trouble (Displayed on screen)	Alarm buzzer	Component in charge	Category of history
E03	**DXJ9KB**	Blade right 2 EPC: Short circuit	●	W/E	Electrical system
E03	**DXJ9KY**	Blade right 2 EPC: Short circuit	●	W/E	Electrical system
E01	**DXJAKA**	Q-drop EPC: Disconnection		W/E	Electrical system
E01	**DXJAKB**	Q-drop EPC: Short circuit		W/E	Electrical system
E01	**DXJAKY**	Q-drop EPC: Short circuit		W/E	Electrical system
E02	**DXJBKA**	S/C ECMV: Disconnection	●	P/T	Electrical system
E02	**DXJBKB**	S/C ECMV: Short circuit	●	P/T	Electrical system
E02	**DXJBKY**	S/C ECMV: Short circuit	●	P/T	Electrical system

★ Entry order of items in table
The items are entered in the order of their failure codes (incremental order).
★ Action code
Attached: If the failure code is detected, the action code, failure code, and telephone No. (if registered) are displayed on the ordinary screen to notify the operator of the fault.
Not attached: Even if the failure code is detected, the machine monitor does not notify the operator of the fault.
★ Alarm buzzer
●: When occurrence of an error is notified to the operator, the buzzer sounds (The operator can stop the buzzer with the alarm buzzer cancel switch).
▲: Since the caution monitor is also turned ON, its function sounds the buzzer.
★ Component in charge
MON: The machine monitor is in charge of detection of fault.
ENG: The engine controller is in charge of detection of fault.
P/T: The power train controller is in charge of detection of fault.
W/E: Work equipment controller is in charge of detection of fault.
★ Category of record
Mechanical equipment system: Fault information is recorded in the "Mechanical Systems".
Electrical equipment system: Fault information is recorded in the "Electrical Systems" .

"Abnormality Record" (Air conditioner "Abnormality Record"/Heater "Abnormality Record")

The machine monitor classifies and records the abnormality which occurred in the past or which are occurring at present into the mechanical system abnormality, electrical system abnormality, and air conditioner abnormality or heater abnormality.
To check the air conditioner "Abnormality Record" or heater "Abnormality Record", perform the following procedures.

★ All the following figures show the air conditioner specification.

1. Selecting menu
   Select "02 Abnormality Record" on the Service menu screen.

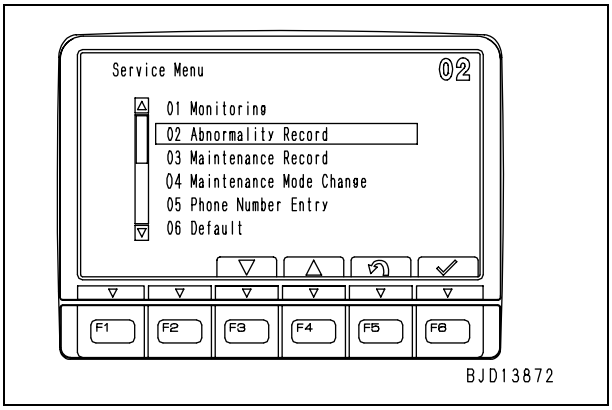

2. Selecting sub menu
   After the "Abnormality Record" screen is displayed, select "03 Air-conditioning System" or "03 Heater Abnormality Record" with the function switches or numeral input switches.
   - [F3]: Move to lower record
   - [F4]: Move to upper record
   - [F5]: Return to service menu screen
   - [F6]: Confirm selection

   ★ You may enter a 2-digit code with the numeral input switches to select the record of that code and confirm it with [F6].

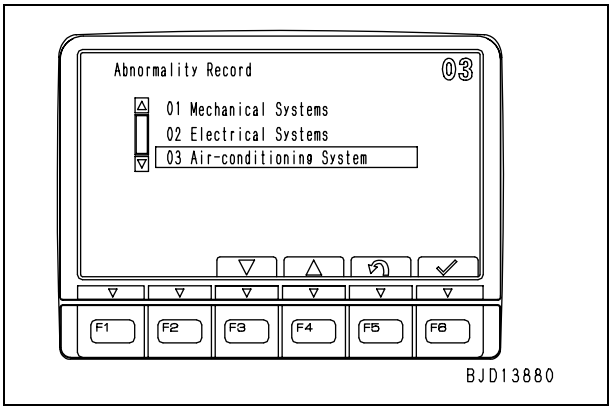

3. Information displayed on "Abnormality Record" screen
   On the air conditioner "Abnormality Record" or heater "Abnormality Record" screen, the following information is displayed.
   (a): System/Component name
   (b): Number of occurrence time
   (c): Condition (Normal or abnormal)
   - [F2]: Delete "Abnormality Record"
   - [F5]: Return to "Abnormality Record" screen

   ★ If [E] is displayed on the left of a condition, the abnormality is still occurring or resetting of it has not been confirmed.

   ★ If "CAN Status" is displayed in Communication condition, communication cannot be carried out normally. Accordingly, the conditions of other items are turned OFF.

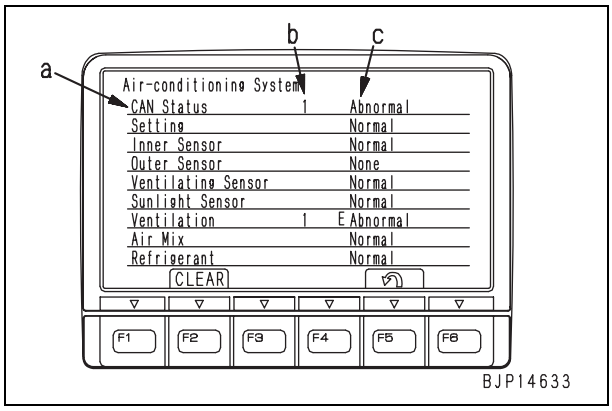

4. Deleting "Abnormality Record"
   While the "Abnormality Record" screen is displayed, press [F2], and the number of occurrence time of fault is deleted. If it is confirmed at this time that the abnormality has been reset, the display changes to Normal.

★ Heater specification
In the heater specification, the display of "Air conditioner" is replaced with "Heater" and the items which are not related to the heater are not displayed.

Maintenance Record

The machine monitor records the maintenance information of the filters, oils, etc., which the operator can display and check by the following operations. When maintenance is carried out, if the data are reset in the operator mode, the number of the times of maintenance is recorded in this section.

1. Selecting menu
   Select "03 Maintenance Record" on the "Service Menu" screen.

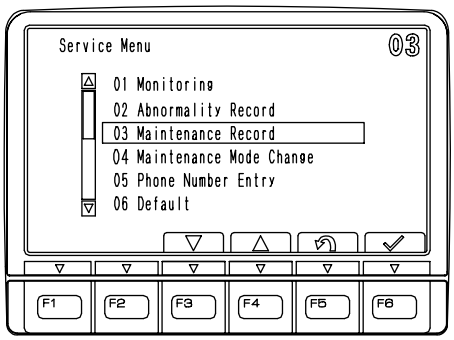

2. Selecting maintenance record item
   After the "Maintenance Record" screen is displayed, select an item to be checked with the function switches or numeral input switches.
   - [F1]: Move to next page (screen)
   - [F2]: Move to previous page (screen)
   - [F3]: Move to lower item
   - [F4]: Move to upper item
   - [F5]: Return to service menu screen

   ★ You may enter a 2-digit code with the numeral input switches to select the item of that code.

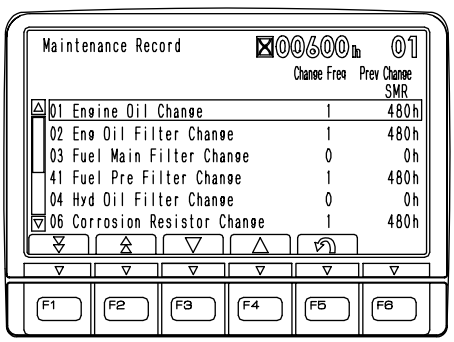

   ★ The following items can be selected in the maintenance record.

01 Engine Oil Change
02 Eng Oil Filter Change
03 Fuel Main Filter Change
41 Fuel Pre Filter Change
04 Hyd Oil Filter Change
06 Corrosion Resistor Change
07 Check and addition of damper case oil
08 Replacement interval of final drive case oil
10 Replacement of hydraulic oil
19 Replacement of power train oil
20 Replacement of power train oil filter

3. Items displayed on Maintenance Record screen
   The following items are displayed.
   (a): Maintenance items
   (b): Number of times of change up to now
   (c): Service meter reading (SMR) at previous change

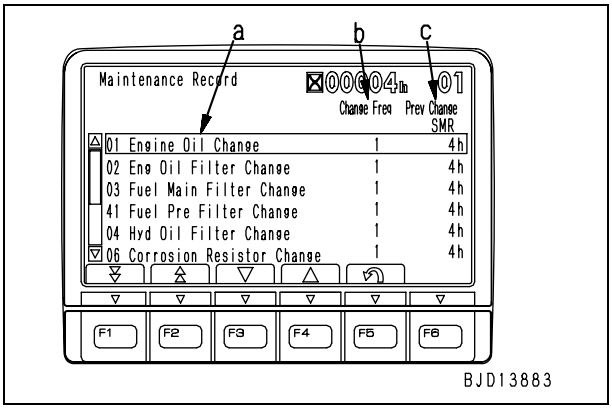

Maintenance Mode Change

The operating condition for maintenance function in the operation mode can be set and changed with this menu.

- Set function effective or ineffective
- Change set change interval (by items)
- Initialize all set change intervals

1. Selecting menu
   Select "04 Maintenance Mode Change" on the Service menu screen.

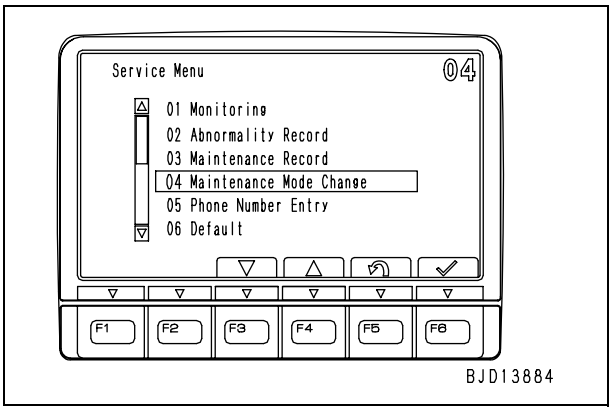

2. Selecting sub menu
   After the "Maintenance Mode On/Off" screen is displayed, select an item to be monitored with the function switches or numeral input switches.
   - [F1]: Move to next page (screen)
   - [F2]: Move to previous page (screen)
   - [F3]: Move to lower item
   - [F4]: Move to upper item
   - [F5]: Return to service menu screen
   - [F6]: Confirm selection
   - ★ You may enter a 2-digit code with the numeral input switches to select the item of that code and confirm it with [F6].

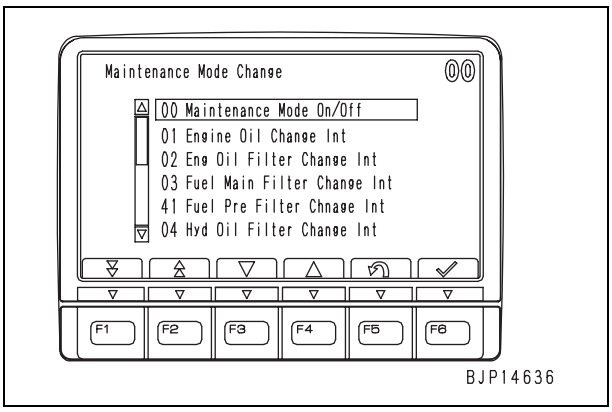

   ★ The following items can be selected on the "Maintenance Mode On/Off" screen.

00 Maintenance Mode On/Off
01 Engine Oil Change Int
02 Eng Oil Filter Change Int
03 Fuel Main Filter Change Int
41 Fuel Pre Filter Change Int
04 Hyd Oil Filter Change Int
06 Replacement interval of corrosion resistor
07 Check and replacement interval of damper case oil
08 Replacement interval of final drive case oil
10 Replacement interval of hydraulic oil
19 Replacement interval of power train oil
20 Replacement interval of power train oil filter
99 Initialize all items

3. Contents of setting of ON/OFF of maintenance mode
   After selecting "00 Maintenance Mode On/Off", if the screen is displayed, set ON or OFF with the function switches.
   - ON: Functions of all maintenance items are set effective in operator mode
   - OFF: Functions of all maintenance items are set ineffective in operator mode
   - [F3]: Move to lower item
   - [F4]: Move to upper item
   - [F5]: Cancel selection and return to Maintenance mode screen
   - [F6]: Confirm selection and return to Maintenance mode screen
   - ★ Even if ON/OFF of each item has been set, if the above setting is changed, it is applied.

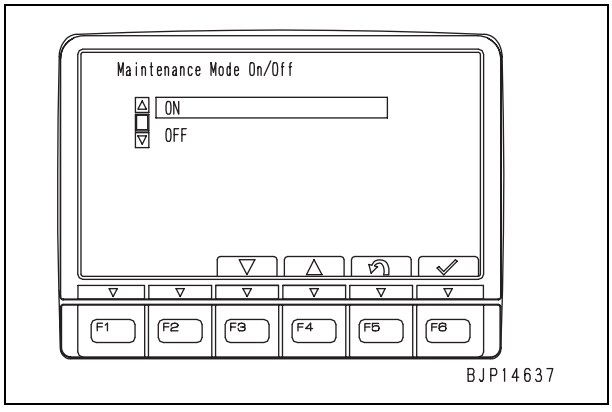

4. Contents of setting of each maintenance item
   After selecting each maintenance item, if the screen is displayed, set the item with the function switches.
   - Default: Maintenance interval set in machine monitor (Recommended by manufacturer and not changeable).

- Set: Maintenance interval which can be set freely. Maintenance functions in operator mode operate on basis of this set time (which is increased or decreased by 50 hours).
- ON: Maintenance function of this item is set effective in operator mode.
- OFF: Maintenance function of this item is set ineffective in operator mode.
- [F3]: Select Reduce set value (Upper) or OFF (Lower).
- [F4]: Select Increase set value (Upper) or ON (Lower).
- [F5]: Cancel setting before confirmation and return to Maintenance Mode Change screen.
- [F6]: Confirm setting of upper or lower line.

★ After the setting of the upper and lower lines is confirmed with [F6] and the screen changes to the Maintenance Mode Change screen with [F5], the setting is effective.

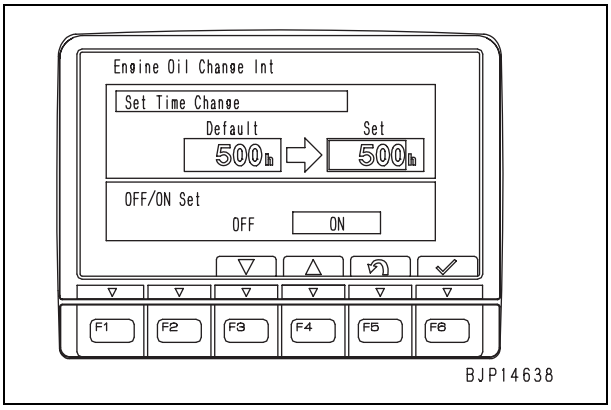

5. Function of All Default Value
After selecting "99 All Default Value", if the screen is displayed, set with the function switches.

★ If this operation is executed, the set values of all the maintenance items are set to default values.

- [F5]: Return to Maintenance Mode Change screen
- [F6]: Execute default setting

★ A while after [F6] is pressed, the default setting completion screen is displayed. Then, if the "Maintenance Mode Change" screen is displayed, default setting is completed.

★ The default setting of the corrosion resistor is "OFF".

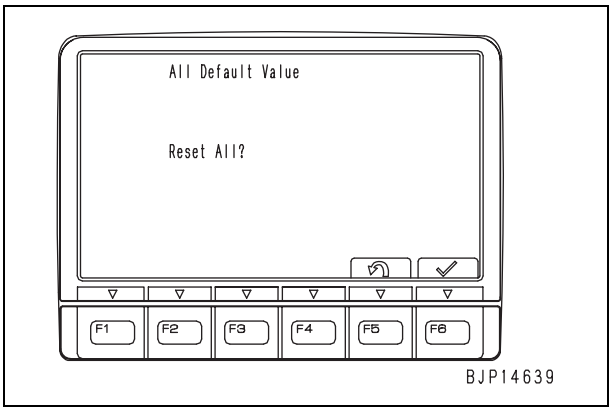

Phone Number Entry

The phone No. displayed when the action code/failure code is displayed in the operator mode can be input and changed according to the following procedure.

If a phone No. is not input with this function, no phone No. is displayed in the operator mode.

1. Selecting menu
   Select "05 Phone Number Entry" on the "Service Menu" screen.

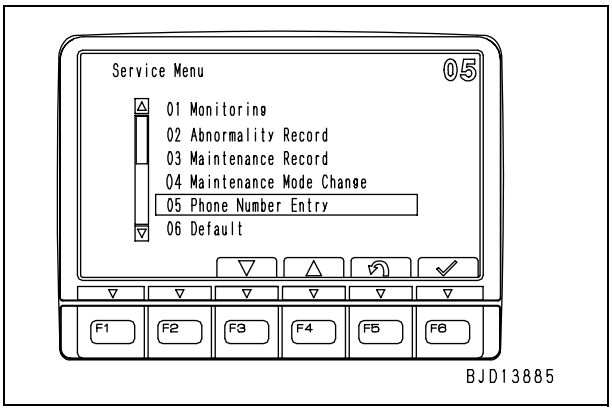

2. Registering and changing telephone No.
   After the "Phone Number Entry" screen is displayed, register or change the phone No.
   - [F2]: Delete all input No.
   - [F3]: Move to left position (if not blank)
   - [F4]: Move to right position (if not blank)
   - [F5]: Delete input digit/Return to service menu
   - [F6]: Confirm input

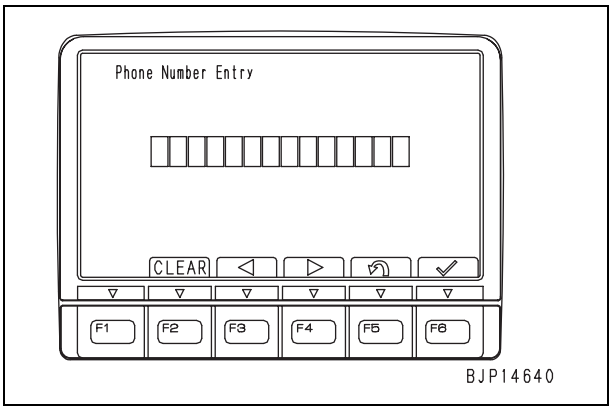

   ★ Up to 14 digits can be input from the left. Input nothing in the surplus positions.
   ★ If one of the input digits is wrong, move to that digit (and its background changes to orange) and overwrite it with the correct digit.
   ★ If [F6] is pressed without inputting a digit, there is not information of phone No. Accordingly, no phone No. is displayed in the operator mode.

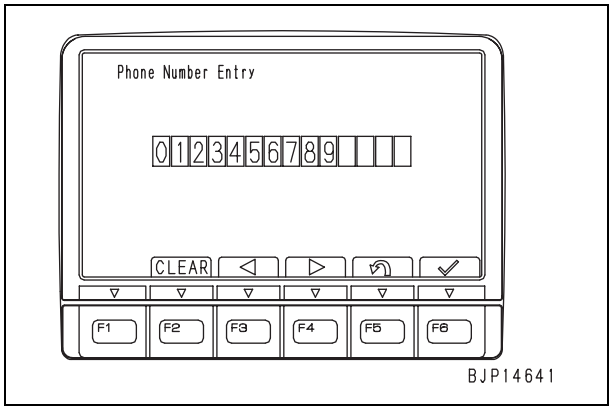

Default setting (Key-on Mode)

Check or change various settings related to the machine monitor and machine by default setting.
The function of Key-on Mode is used to set the initial mode displayed on the machine monitor when the starting switch is turned ON.

1. Selecting menu
   Select "06 Default" on the "Service Menu" screen.

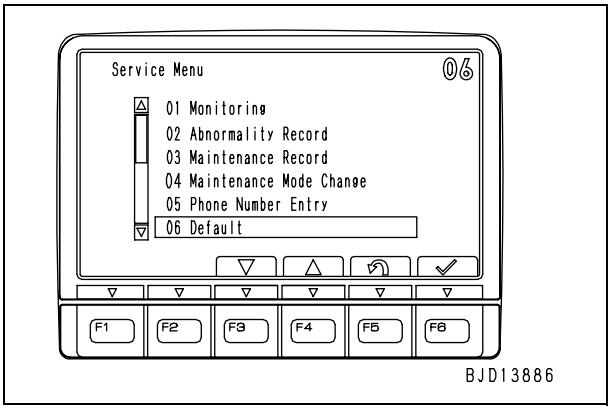

2. Selecting sub menu
   After the "Default" screen is displayed, select "01 Key-on Mode" with the function switches or numeral input switches.
   - ★ Select this item similarly to an item on the "Service Menu" screen.
   - ★ This function sets the following 4 mode items (which are the items set with the customize switch in the operator mode).
   - Power: P/E
   - Reverse slow mode: ON/OFF
   - Work equipment fine control: ON/OFF
   - Blade slow down: ON/OFF

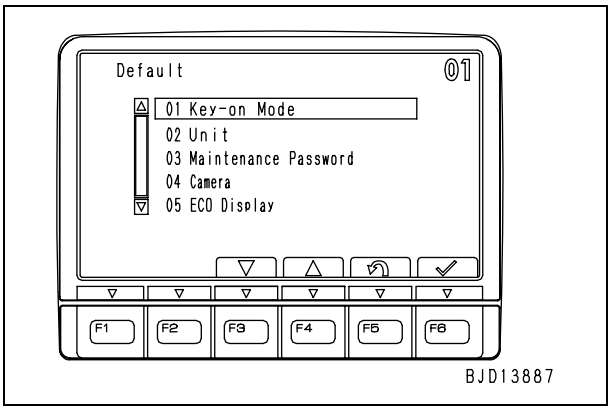

3. Selecting mode
   After the "Key-on Mode" screen is displayed, select the mode to be set with the function switches.
   - Mode at previous key-OFF: Final mode in previous operation is displayed when starting switch is turned ON
   - Default Value (ALL OFF): Default setting of all mode items (Power: E, other 3 items: OFF) is displayed when starting switch is turned ON
   - [F3]: Move to lower item
   - [F4]: Move to upper item
   - [F5]: Cancel selection and return to default screen
   - [F6]: Confirm selection and return to default screen
   - ★ When the machine is delivered, Default Value (All OFF).

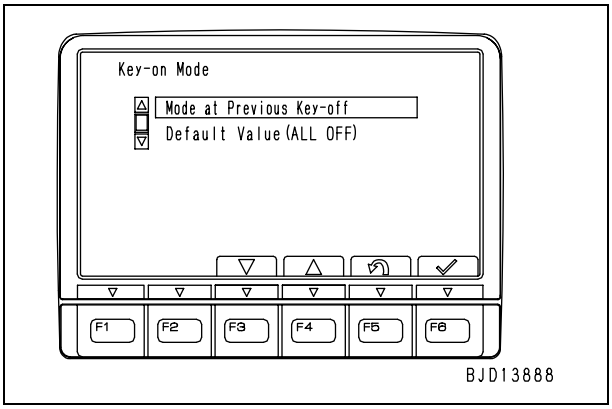

Default setting (Setting of unit)

Check or change various settings related to the machine monitor and machine by default setting. The unit selecting function is used to select the unit of the data displayed for monitoring, etc.

1. Selecting menu
   Select "06 Default" on the "Service Menu" screen.

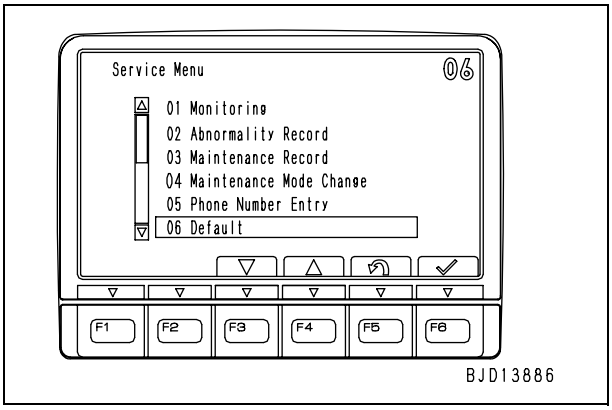

2. Selecting sub menu
   After the "Default" screen is displayed, select "02 Unit" with the function switches or numeral input switches.
   ★ Select this item similarly to an item on the "Service Menu" screen.

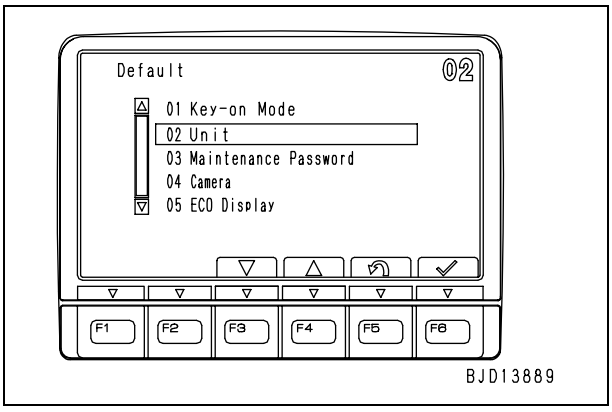

3. Selecting unit
   After the "Unit" screen is displayed, select the unit to be set with the function switches.
   - [F3]: Move to lower unit
   - [F4]: Move to upper unit
   - [F5]: Cancel selection and return to default screen
   - [F6]: Confirm selection and return to default screen

   ★ When the machine is delivered, the SI unit system is set.

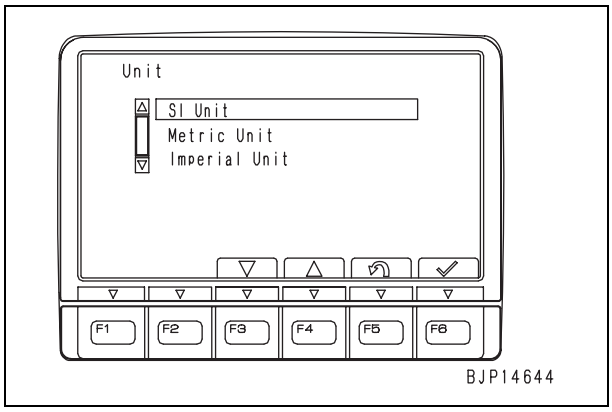

Default setting (Setting of maintenance password)

Check or change various settings related to the machine monitor and machine by default setting.
The function of setting maintenance password is used to set the display of the password screen when the functions related to the maintenance are used in the operator mode.

1. Selecting menu
   Select "06 Default" on the "Service Menu" screen.

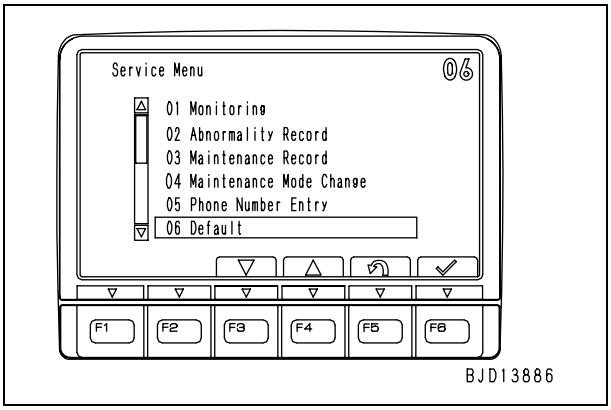

2. Selecting sub menu
   After the "Default" screen is displayed, select "03 Maintenance Password" with the function switches or numeral input switches.
   ★ Select this item similarly to an item on the Service menu screen.

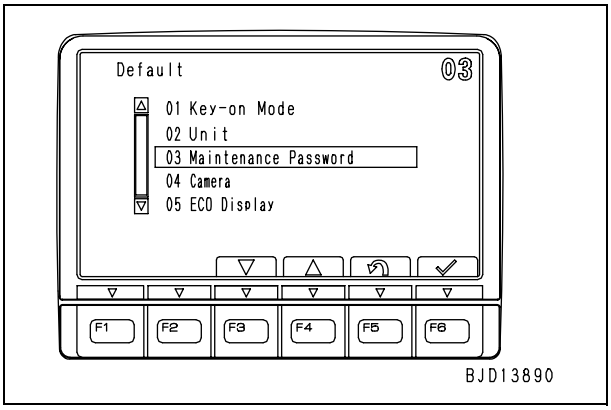

3. Selecting Enable/Disable
   After the "Maintenance Password" screen is displayed, select the setting with the function switches.
   - Disable: Password screen is not displayed
   - Enable: Password screen is displayed
   - [F3]: Move to lower item
   - [F4]: Move to upper item
   - [F5]: Cancel selection and return to Initialization screen
   - [F6]: Confirm selection and return to default screen

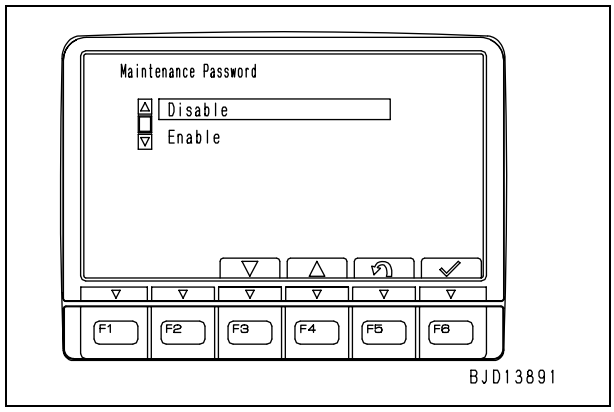

4. Displaying maintenance password screen
   When the following operation is performed, the password screen is displayed in the operator mode.
   - The ordinary screen is changed to the maintenance mode (with [F5]) and then the "Maintenance table" screen is changed to the "Maintenance interval reset" screen.

5. Changing maintenance password
   The password can be changed by operating the switches specially in the operator mode.
   ★ See "Function of changing maintenance password" in the operator mode.
   ★ Default password: [000000]
   ★ If the password setting is changed from "Enable" to "Disable", the password is reset to the default.
   ★ When "Enable" is set again, be sure to set a new password.
   ★ The maintenance password is different from the engine start lock password.

Default setting (Setting of camera)

Check or change various settings related to the machine monitor and machine by default setting.
The camera setting function is used to set default setting and removal of a camera.

1. Selecting menu
   Select "06 Default" on the "Service Menu" screen.

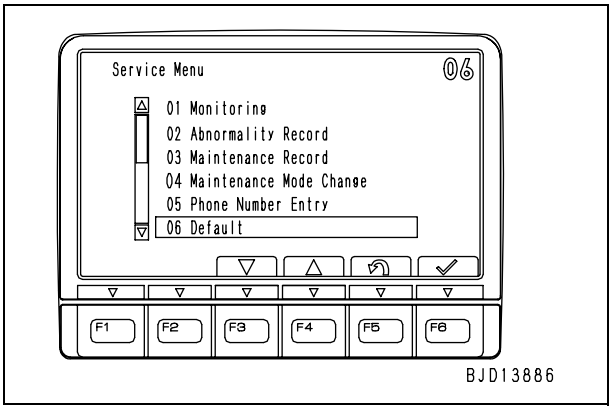

2. Selecting sub menu
   After the "Default" screen is displayed, select "04 Camera" with the function switches or numeral input switches.
   ★ Select this item similarly to an item on the "Service Menu" screen.

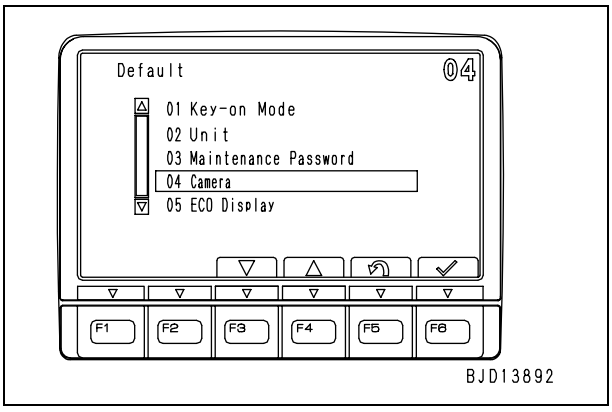

3. Selecting camera setting
   After the "Camera" screen is displayed, select the setting with the function switches.
   - OFF: Camera is not connected
   - Original image: Image of connected camera is displayed in original position (as in mirror, used as back monitor)
   - Reverse image: Image of connected camera is displayed in reverse position (as seen directly, used as front or side monitor)
   - [F3]: Move to left item
   - [F4]: Move to right item
   - [F5]: Cancel setting before confirmation and return to Default screen
   - [F6]: Confirm selection in each line

   ★ After "Camera" screen is displayed, camera 1 can be always set. When 2 or more cameras are connected, if camera 1 is set, the screen changes to setting of camera 2 automatically.
   ★ After confirming the setting of each line with [F6], return to the Default screen with [F5], and the setting is effective.
   ★ If a camera is connected but not set normally with this function, the graphic mark of camera is not displayed at [F3] in the operator mode. Accordingly, the image of the camera cannot be used.
   ★ If 2 or more cameras are connected, be sure to set the use of them from camera 1 in order.
   ★ The function of displaying 2 images simultaneously is effective when use of camera 1 and camera 2 is set.
   ★ When a camera is installed, check that the displayed image is not inverted horizontally in the operator mode.

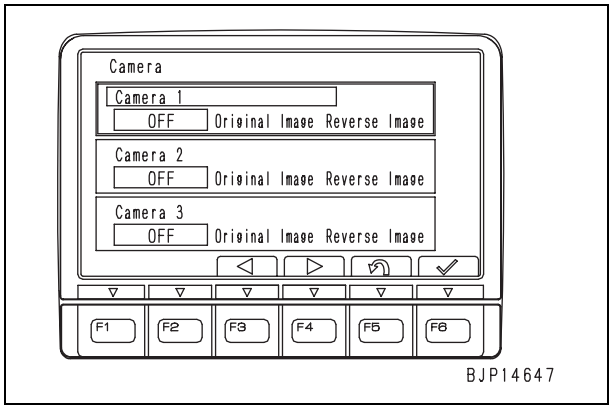

Default setting (Setting of ECO display)

Check or change various settings related to the machine monitor and machine by initialization.
The ECO display setting function is used to set the display of the ECO gauge.

1. Selecting menu
   Select "06 Default" on the "Service Menu" screen.

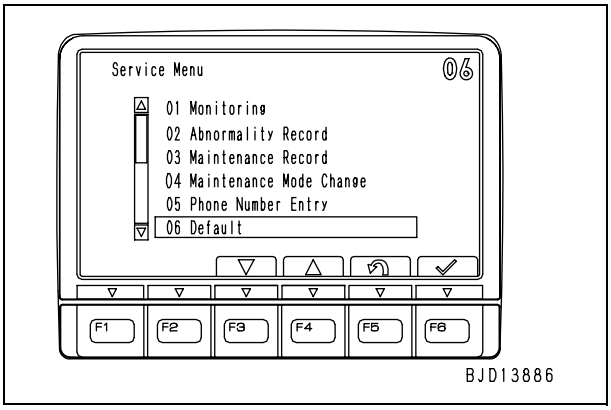

2. Selecting sub menu
   After the "Default" screen is displayed, select "05 ECO Display" with the function switches or numeral input switches.
   ★ Select this item similarly to an item on the "Service Menu" screen.

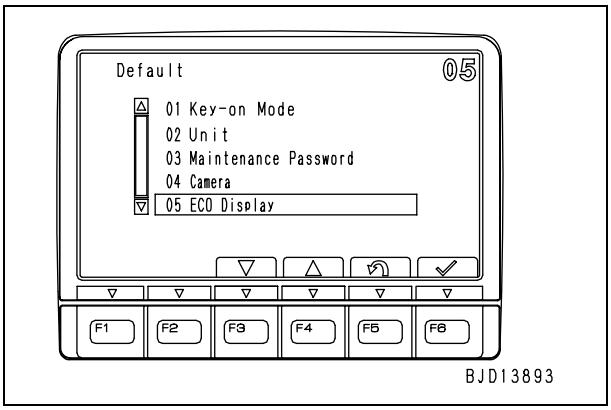

3. Selecting display setting
   After the "ECO Display" screen is displayed, select the setting with the function switches.
   - ON: Display ECO
   - OFF: Do not display ECO
   - [F3]: Move to left item
   - [F4]: Move to right item
   - [F5]: Cancel selection and return to default screen
   - [F6]: Confirm selection and return to default screen

★ If ECO display is turned ON, ECO is displayed when the screen changes to the ordinary screen.

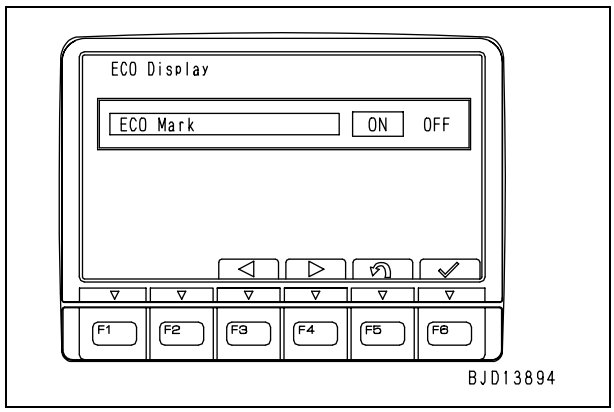

★ Display of ECO gauge (a)

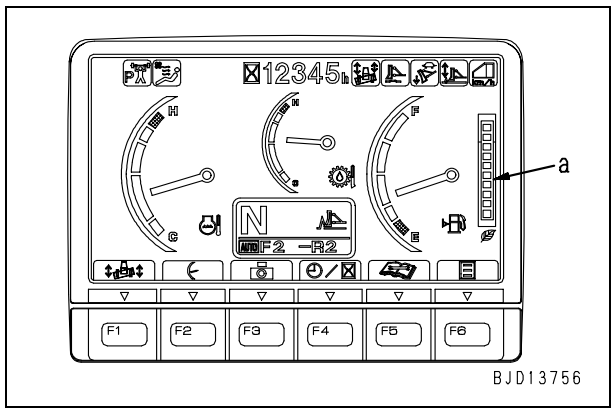

Adjustment

The operator can adjust various items related to the machine with the machine monitor.
When using an adjustment item, select it according to the following procedure.

1. Selecting menu
   Select "07 Adjustment" on the "Service Menu" screen.

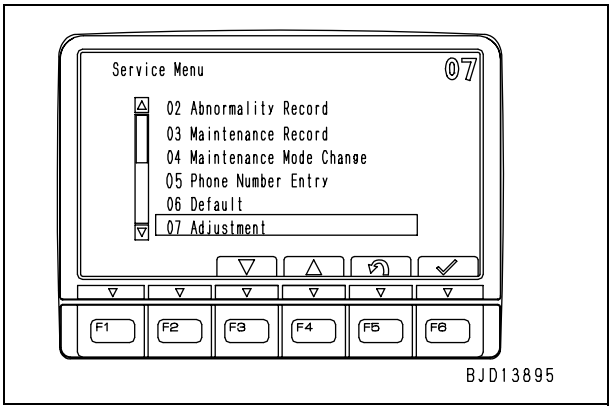

2. Selecting adjustment item
   After the "Adjustment" screen is displayed, input the 4-digit adjustment ID of the adjustment item to be used with the numeral input switches.
   - [F5]: Cancel adjustment and return to Service menu screen
   - [F6]: Confirm input adjustment ID and go to Adjustment screen

   ★ For the adjustment ID's and their adjustment items, see the adjustment items table.

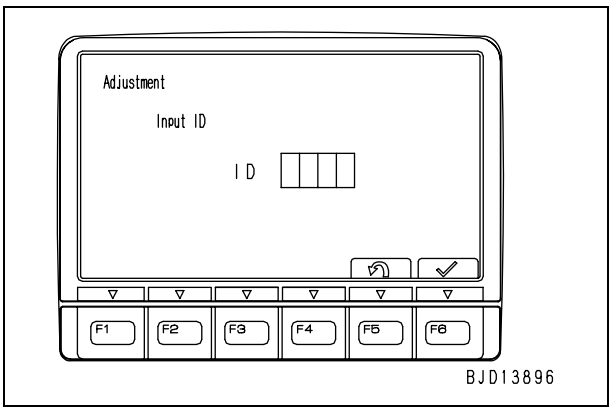

   ★ If the input adjustment ID is incorrect, the message of "No ready Adjustment" is displayed and the ID input screen does not change (Another ID can be input again with the numeral input switches while this screen is displayed).

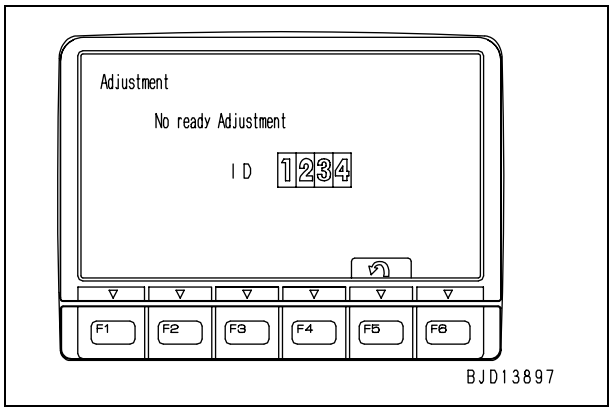

3. Displaying adjustment screen
   After the "Adjustment" screen for the adjustment ID is displayed, you can start adjustment.
   ★ In the figure, adjustment ID [0002] is selected and displayed as an example.
   ★ "000", "00", and "0" on the left of the adjustment ID must be filled but they are not displayed on the adjustment screen.
   ★ The functions given to function switches [F3] – [F6] depend on the adjustment item.
   ★ For the method of operating each adjustment item, see the explanation of its adjustment ID.

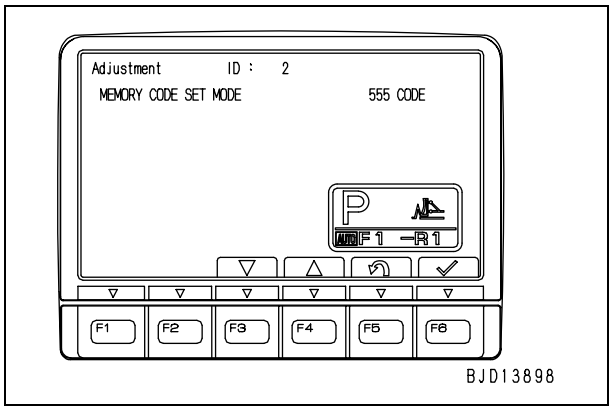

Adjustment items table

Adjustment ID	Adjustment item	Remarks
0002	Power train controller initialization	
0004	Work equipment specification setting	
0005	Brake pedal potentiometer initial correction	
0007	Engine decelerator cutting	Resetting auto-decelerating function
0009	Pitch angle sensor initial correction	
0010	Fan 70% mode	
0031	Work equipment controller initialization	
0530	Stall mode	Recommended mode of torque converter stall
0910	Load record check mode	
1005	Fan 100% mode	
1012	Steering lever neutral position adjustment	
1013	Steering lever leftmost position adjustment	
1014	Steering lever rightmost position adjustment	
1015	Right brake oil pressure offset	
1016	Left brake oil pressure offset	
2021	Power train controller voltage check mode	
2022	Work equipment controller voltage check mode	
2222	HSS min. current setting mode	
6001	R1 reverse slow set speed	Fine adjustment of reverse slow mode
6002	R2 reverse slow set speed	Fine adjustment of reverse slow mode
6003	R3 reverse slow set speed	Fine adjustment of reverse slow mode
7842	Transmission clutch IP automatic initial correction	
7843	Transmission clutch IP manual initial correction	
7845	Transmission clutch IP learning display	
8000	Blade lift lever neutral position adjustment	
8001	Blade lift lever max. raising position adjustment	
8002	Blade lift lever max. lowering position adjustment	
8003	Blade tilt lever neutral position adjustment	
8004	Blade tilt lever rightmost position adjustment	
8005	Blade tilt lever leftmost position adjustment	
8006	Ripper lift lever neutral position adjustment	
8007	Ripper lift lever max. raising position adjustment	
8008	Ripper lift lever max. lowering position adjustment	
8009	Ripper tilt lever neutral position adjustment	
8010	Ripper tilt lever max. IN position adjustment	
8011	Ripper tilt lever max. BACK position adjustment	
8020	Blade raising current correction	Fine adjustment with blade fine control mode OFF
8021	Blade lowering current correction	Fine adjustment with blade fine control mode OFF
8022	Blade raising current correction (Fine control mode)	Fine adjustment with blade fine control mode ON
8023	Blade lowering current correction (Fine control mode)	Fine adjustment with blade fine control mode ON
8024	Blade tilting left current correction	
8025	Blade tilting right current correction	
9995	Control brake release mode	Control brake: Brake ECMV (Right and left)
9996	Sudden stop prevent valve operation mode	
9997	High idle cut mode	
9998	Max. gear speed setting mode	

Adjustment ID: **0002** (Power train controller initialization)

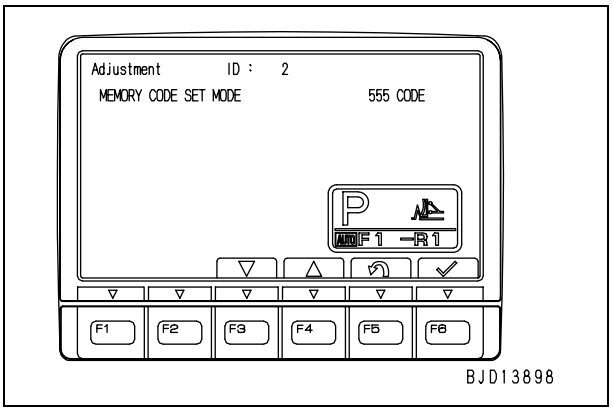

- This adjustment code is used to initialize the specification code recognized by the power train controller and the set values of the memory in the controller.

★ After the power train controller is replaced, be sure to carry out this adjustment once.

- Functions of function switches
  [F3]: Unused
  [F4]: Unused
  [F5]: Return to adjustment item selecting screen (ID inputting screen)
  [F6]: Save setting

- Operating method:
  1) Press [F6] and check that the alarm buzzer sounds.
  2) Check that the displayed specification code [CODE] has changed from [5x5] to [555].

  ★ If specification code [555] is not displayed, the controller wiring harness or the controller unit may be defective.

  ★ Even if this adjustment code is turned off, the setting is effective.

Adjustment ID: **0004** (Work equipment specification setting)

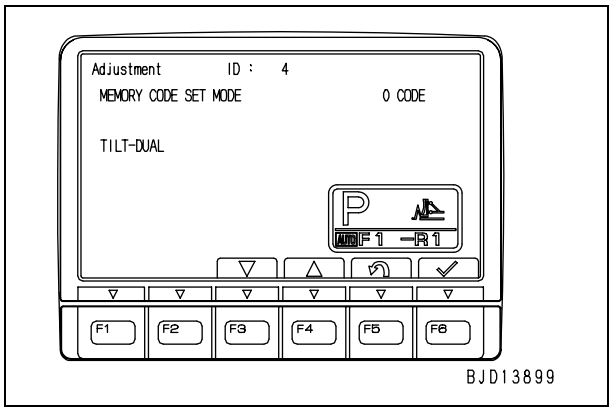

- This adjustment code is used to make the work equipment controller recognize the type of the work equipment.

★ After the work equipment controller is replaced, be sure to carry out this adjustment once.

- Functions of function switches
  [F3]: Increase specification value [CODE]
  [F4]: Decrease specification value [CODE]
  [F5]: Return to adjustment item selecting screen (ID inputting screen)
  [F6]: Save setting

- Operating method:
  1) Press [F3] or [F4] to select the specification value [CODE] of the work equipment concerned.

CODE	Type of work equipment
0	Dual tiltdozer
1	Single tiltdozer
2	Mechanical dozer

  2) Press [F6] and check that the alarm buzzer sounds.

  ⚠ **If the specification of the work equipment is different from the setting in the controller, the work equipment may move unexpectedly or an error may be made. Accordingly, be sure to match the controller to the work equipment.**

  ★ Even if this adjustment code is turned off, the setting is effective.

Adjustment ID: **0005** (Brake pedal potentiometer initial correction)

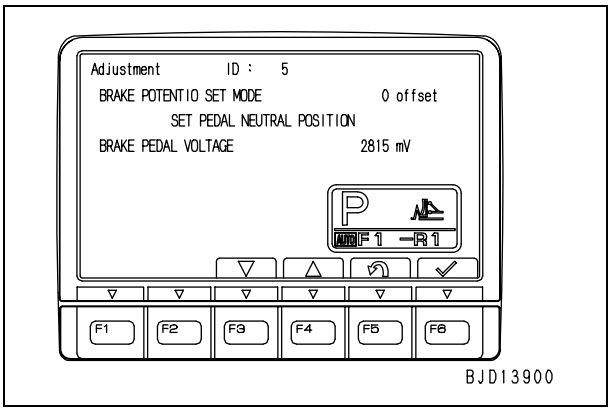

- This adjustment code is used to make the power train controller recognize the zero point of the brake pedal potentiometer.

★ After the power train controller or brake pedal potentiometer is replaced or the brake pedal linkage is disconnected and connected, be sure to carry out this adjustment once.

- Functions of function switches
  [F3]: Unused
  [F4]: Unused
  [F5]: Return to adjustment item selecting screen (ID inputting screen)
  [F6]: Save corrected value

- Operating method:
  1) Check that the brake pedal is in the neutral position (it is not pressed at all) and keep it in that position.
  2) Press [F6] and check that the alarm buzzer sounds.

  ★ Even if the adjustment is carried out, the displayed value does not change.
  ★ Even if this adjustment code is turned off, the correction is effective.
  ★ This adjustment code is used to make the controller recognize the zero point of the potentiometer. It is not used to adjust the braking force.

Adjustment ID: **0007** (Engine decelerator cutting)

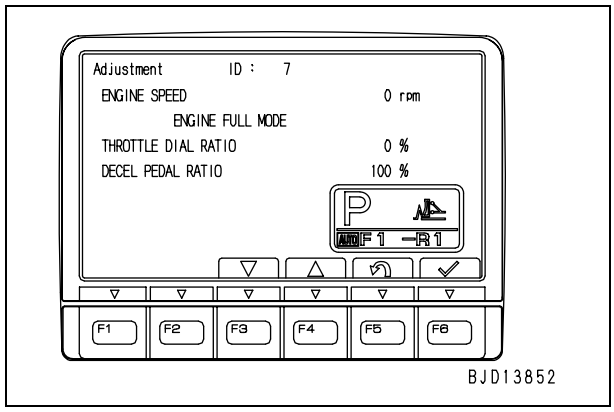

- This adjustment code is used to stop the auto-deceleration function of the engine and check the high idle speed of the engine unit.

★ The engine can be driven and tested with the auto-deceleration reset only while this adjustment code is selected.
★ Use this adjustment code for testing, adjusting, or troubleshooting when necessary.

- Functions of function switches
  [F3]: Unused
  [F4]: Unused
  [F5]: Return to adjustment item selecting screen (ID inputting screen)
  [F6]: Unused

- Operating method:
  When this adjustment code is displayed, its function is effective and the auto-deceleration function is stopped.

  ★ After this adjustment code is turned OFF, its function is ineffective.

Adjustment ID: **0009** (Pitch angle sensor initial correction)

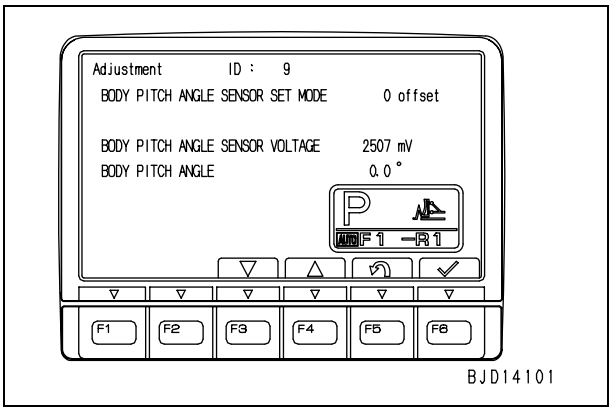

- This adjustment code is used to make the power train controller recognize the zero point of the pitch angle sensor and to correct the installation error.

★ After the power train controller is replaced or the pitch angle sensor is removed and installed or replaced, be sure to carry out this adjustment once.

- Functions of function switches
  [F3]: Unused
  [F4]: Unused
  [F5]: Return to adjustment item selecting screen (ID inputting screen)
  [F6]: Save corrected value

- Operating method:
  1) Check that the machine is level.
  2) Press [F6] and check that the alarm buzzer sounds.

  ★ If adjustment is carried out, displayed item [BODY PITCH ANGLE] changes to [0.0 °] (The other displayed items do not change).

  ★ Even if this adjustment code is turned off, the correction is effective.

Adjustment ID: **0010** (Fan 70% mode)

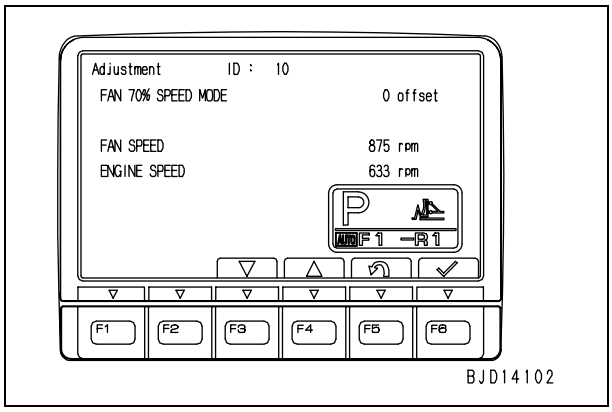

- This adjustment code is used to set the cooling fan speed to about 70% forcibly.

★ Use this adjustment code for testing, adjusting, or troubleshooting when necessary.

- Functions of function switches
  [F3]: Increase adjustment value [FAN 70% SPEED MODE]
  [F4]: Decrease adjustment value [FAN 70% SPEED MODE]
  [F5]: Return to adjustment item selecting screen (ID inputting screen)
  [F6]: Unused

- Operating method:
  When this adjustment code is displayed, its function is effective and the cooling fan speed is controlled to about 70% of the maximum speed.

  ★ After this adjustment code is turned OFF, its function is ineffective.

Adjustment ID: **0031** (Work equipment controller initialization)

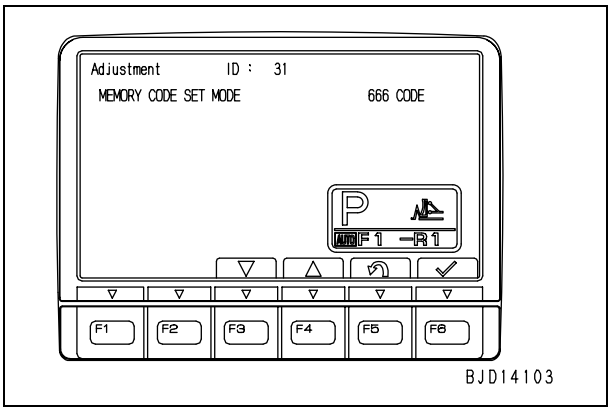

- This adjustment code is used to initialize the specification code recognized by the work equipment controller and the set values of the memory in the controller.

★ After the work equipment controller is replaced, be sure to carry out this adjustment once.

- Functions of function switches
  [F3]: Unused
  [F4]: Unused
  [F5]: Return to adjustment item selecting screen (ID inputting screen)
  [F6]: Save setting

- Operating method:
  1) Press [F6] and check that the alarm buzzer sounds.
  2) Check that the displayed specification code [CODE] has changed from [6x6] to [666].
  ★ If specification code [666] is not displayed, the controller wiring harness or the controller unit may be defective.
  ★ Even if this adjustment code is turned off, the setting is effective.

Adjustment ID: **0530** (Stall mode)

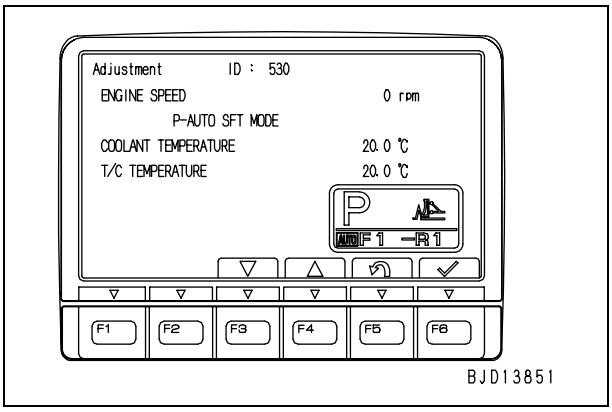

- This adjustment code is used to set the fan speed in the 100% mode automatically and make it possible to set the preset (gear speed at start) to [F3-R3] to stall the torque converter.
  ★ The preset (gear speed at start) can be set to [F3-R3] only while this adjustment code is selected.
  ★ Use this adjustment code for testing, adjusting, or troubleshooting when necessary.

- Functions of function switches
  [F3]: Unused
  [F4]: Unused
  [F5]: Return to adjustment item selecting screen (ID inputting screen)
  [F6]: Unused

- Mode setting information within screen
  [P-AUTO SFT MODE]:
  Automatic gearshift in P mode
  [E-AUTO SFT MODE]:
  Automatic gearshift in E mode
  [P-MANUAL SFT MODE]:
  Manual gearshift in P mode
  [E-MANUAL SFT MODE]:
  Manual gearshift in E mode

- Operating method:
  When this adjustment code is displayed, its function is effective and the preset (gear speed at start) is set to [F3-R3].

  ⚠ **This adjustment code does not stall the torque converter automatically. Accordingly, operate the levers and pedals securely when stalling the torque converter (For the procedure for stalling the torque converter, see Measuring engine speed).**

  ★ After this adjustment code is turned OFF, its function is ineffective.

Adjustment ID: **0910** (Load record check mode)

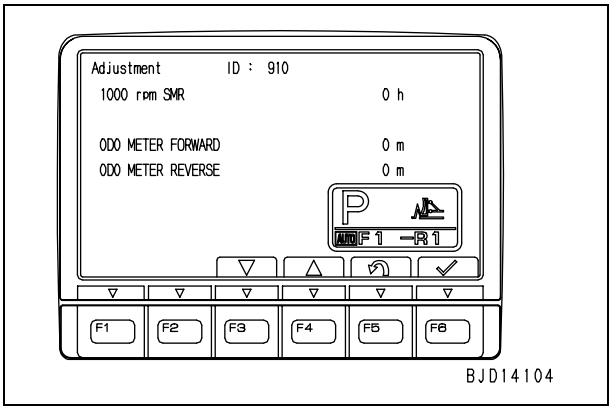

- This adjustment code is used to check the load on the machine, odometer, and reverse odometer.

★ Use this adjustment code for testing, adjusting, or troubleshooting when necessary.

- Functions of function switches
  [F3]: Unused
  [F4]: Unused
  [F5]: Return to adjustment item selecting screen (ID inputting screen)
  [F6]: Unused

- Mode setting information within screen
  [1000 rpm SMR]: Time displayed by service meter in which engine speed was above 1,000 rpm
  [ODO METER FORWARD]: Total forward travel distance
  [ODO METER REVERSE]: Total reverse travel distance

- Operating method:
  When this adjustment code is displayed, its function is effective and the load on the machine, odometer, and reverse odometer are displayed simultaneously.
  ★ The data cannot be reset.
  ★ After this adjustment code is turned OFF, its function is ineffective.

Adjustment ID: **1005** (Fan 100% mode)

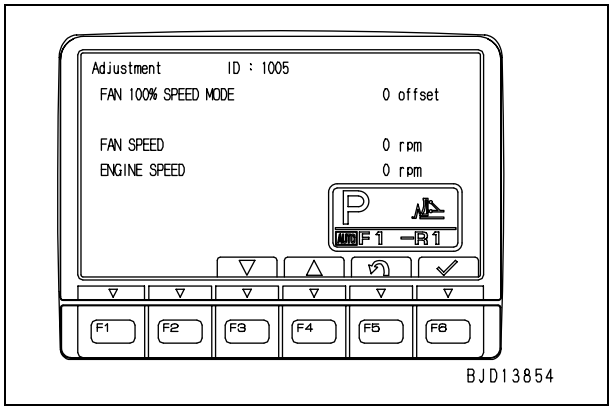

- This adjustment code is used to set the cooling fan speed to about 100% forcibly. It is also used to set the adjustment value of the maximum speed.

★ Use this adjustment code for testing, adjusting, or troubleshooting when necessary.

- Functions of function switches
  [F3]: Increase adjustment value [FAN 100% SPEED MODE]
  [F4]: Decrease adjustment value [FAN 100% SPEED MODE]
  [F5]: Return to adjustment item selecting screen (ID inputting screen)
  [F6]: Save adjustment value

- Operating method:
  ★ When this adjustment code is displayed, its function is effective and the cooling fan speed is controlled to about 100% of the maximum speed.
  1) Increase or decrease the adjustment value by pressing [F3] or [F4].
  2) When confirming the adjustment value, press [F6] and check that the alarm buzzer sounds.
  ★ After this adjustment code is turned OFF, its function is ineffective but the set adjustment value is effective.

Adjustment ID: **1012** (Steering lever neutral position adjustment)

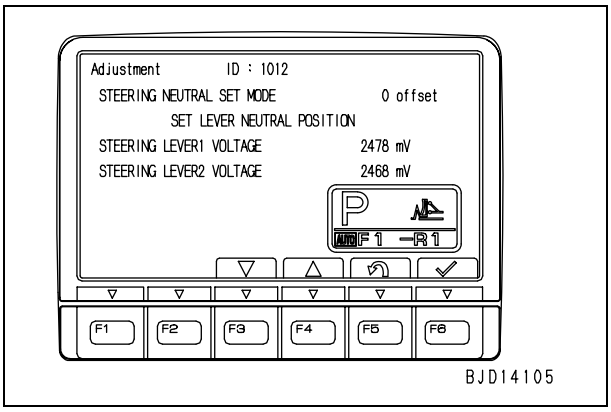

- This adjustment code is used to make the power train controller recognize the neutral position of the steering potentiometer of the PCCS lever.

★ After the power train controller or PCCS lever is replaced, be sure to carry out this adjustment once.

- Functions of function switches
  [F3]: Unused
  [F4]: Unused
  [F5]: Return to adjustment item selecting screen (ID inputting screen)
  [F6]: Save adjustment value

- Operating method:
  1) Check that the PCCS lever is in the neutral position of the steering direction and keep it in that position.
  2) Press [F6] and check that the alarm buzzer sounds.
  ★ Even if the adjustment is carried out, the displayed value does not change.
  ★ Even if this adjustment code is turned off, the adjustment is effective.
  ★ This adjustment code is used to make the controller recognize the neutral position of the potentiometer. It is not used to adjust the steering force.

Adjustment ID: **1013** (Steering lever leftmost position adjustment)

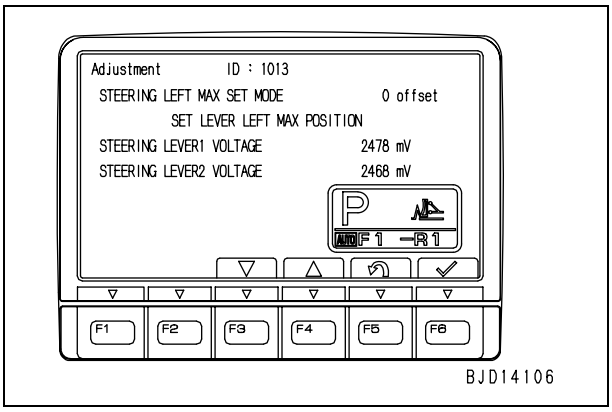

- This adjustment code is used to make the power train controller recognize the leftmost position of the steering potentiometer of the PCCS lever.

★ After the power train controller or PCCS lever is replaced, be sure to carry out this adjustment once.

- Functions of function switches
  [F3]: Unused
  [F4]: Unused
  [F5]: Return to adjustment item selecting screen (ID inputting screen)
  [F6]: Save adjustment value

- Operating method:
  1) Operate the PCCS lever to the left stroke end of the steering direction and keep it in that position.
  2) Press [F6] and check that the alarm buzzer sounds.
  ★ Even if the adjustment is carried out, the displayed value does not change.
  ★ Even if this adjustment code is turned off, the adjustment is effective.
  ★ This adjustment code is used to make the controller recognize the leftmost position of the potentiometer. It is not used to adjust the steering force.

Adjustment ID: **1014** (Steering lever rightmost position adjustment)

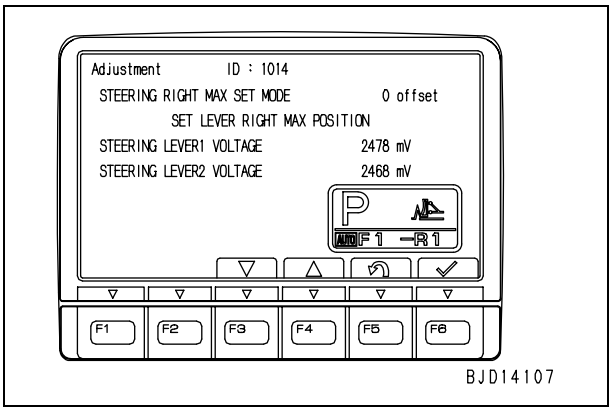

- This adjustment code is used to make the power train controller recognize the rightmost position of the steering potentiometer of the PCCS lever.

★ After the power train controller or PCCS lever is replaced, be sure to carry out this adjustment once.

- Functions of function switches
  [F3]: Unused
  [F4]: Unused
  [F5]: Return to adjustment item selecting screen (ID inputting screen)
  [F6]: Save adjustment value

- Operating method:
  1) Operate the PCCS lever to the right stroke end of the steering direction and keep it in that position.
  2) Press [F6] and check that the alarm buzzer sounds.
  ★ Even if the adjustment is carried out, the displayed value does not change.
  ★ Even if this adjustment code is turned off, the adjustment is effective.
  ★ This adjustment code is used to make the controller recognize the rightmost position of the potentiometer. It is not used to adjust the steering force.

Adjustment ID: **1015** (Right brake oil pressure offset)

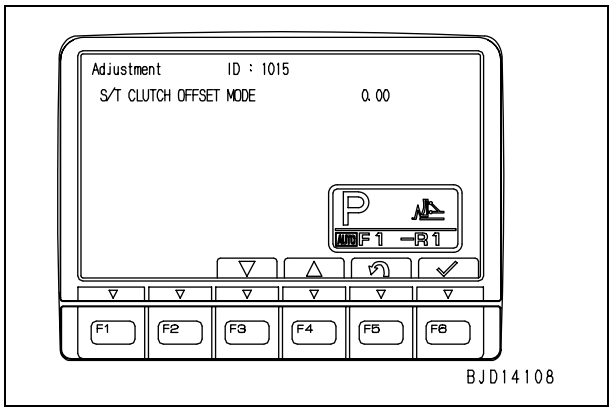

- This adjustment code is used to adjust the right brake oil pressure manually.

★ Use this adjustment code for work when necessary.

- Functions of function switches
  [F3]: Increase adjustment value
  [F4]: Decrease adjustment value
  [F5]: Return to adjustment item selecting screen (ID inputting screen)
  [F6]: Save adjustment value

- Information displayed on screen
  The offset oil pressure is displayed and the adjustment value is increased or decreased by 0.1 kg/cm² (The value displayed on the screen is multiplied by 100).
  ★ The default adjustment value is 0 kg/cm².
  ★ The adjustment range is -3 – 3 kg/cm².

- Operating method:
  1) Increase or decrease the adjustment value by pressing [F3] or [F4].
  2) Press [F6] and check that the alarm buzzer sounds.
  ★ If the oil pressure has been adjusted, it is displayed. It can be adjusted again within the adjustment range, however.
  ★ It is not necessary to operate the brake during adjustment. After finishing adjustment, however, operate the brake and check that there is not a problem in the actual brake performance.
  ★ Even if this adjustment code is turned off, the adjustment is effective.

Adjustment ID: **1016**
(Left brake oil pressure offset)

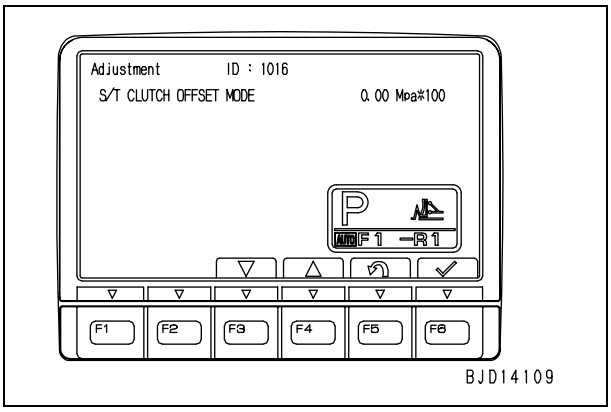

- This adjustment code is used to adjust the left brake oil pressure manually.

★ Use this adjustment code for work when necessary.

- Functions of function switches
  [F3]: Increase adjustment value
  [F4]: Decrease adjustment value
  [F5]: Return to adjustment item selecting screen (ID inputting screen)
  [F6]: Save adjustment value

- Information displayed on screen
  The offset oil pressure is displayed and the adjustment value is increased or decreased by 0.1 kg/cm² (The value displayed on the screen is multiplied by 100).
  ★ The default adjustment value is 0 kg/cm².
  ★ The adjustment range is -3 – 3 kg/cm².

- Operating method
  1) Increase or decrease the adjustment value by pressing [F3] or [F4].
  2) Press [F6] and check that the alarm buzzer sounds.
  ★ It is not necessary to operate the brake during adjustment. After finishing adjustment, however, operate the brake and check that there is not a problem in the actual brake performance.
  ★ If the oil pressure has been adjusted, it is displayed. It can be adjusted again within the adjustment range, however.
  ★ Even if this adjustment code is turned off, the adjustment is effective.

Adjustment ID: **2021** (Power train controller voltage check mode)

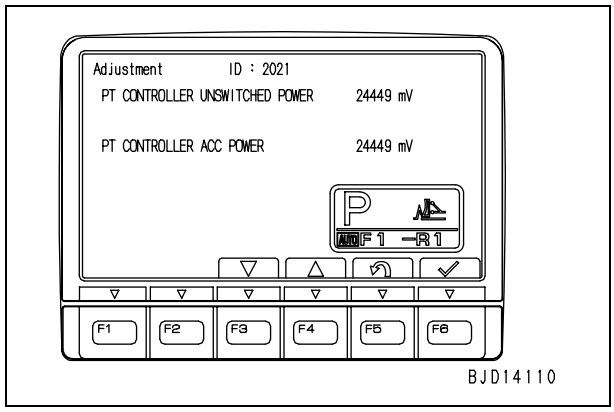

- This adjustment code is used to check the constant power supply voltage and switch power supply voltage applied to the power train controller.

★ Use this adjustment code for testing, adjusting, or troubleshooting when necessary.

- Functions of function switches
  [F3]: Unused
  [F4]: Unused
  [F5]: Return to adjustment item selecting screen (ID inputting screen)
  [F6]: Unused

- Information displayed on screen
  [PT CONTROLLER UNSWITCH POWER]:
  Constant power supply voltage
  [PT CONTROLLER ACC POWER]:
  Switch power supply voltage

- Operating method:
  When this adjustment code is displayed, its function is effective and the constant power supply voltage and switch power supply voltage are displayed simultaneously.
  ★ After this adjustment code is turned OFF, its function is ineffective.

Adjustment ID: **2022** (Work equipment controller voltage check mode)

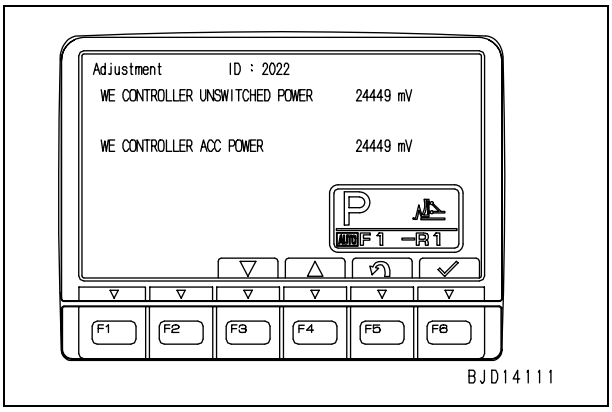

- This adjustment code is used to check the constant power supply voltage and switch power supply voltage applied to the work equipment controller.

★ Use this adjustment code for testing, adjusting, or troubleshooting when necessary.

- Functions of function switches
  [F3]: Unused
  [F4]: Unused
  [F5]: Return to adjustment item selecting screen (ID inputting screen)
  [F6]: Unused

- Information displayed on screen
  [WE CONTROLLER UNSWITCH POWER]:
  Constant power supply voltage
  [WE CONTROLLER ACC POWER]:
  Switch power supply voltage

- Operating method:
  When this adjustment code is displayed, its function is effective and the constant power supply voltage and switch power supply voltage are displayed simultaneously.
  ★ After this adjustment code is turned OFF, its function is ineffective.

Adjustment ID: **2222** (HSS min. current setting mode)

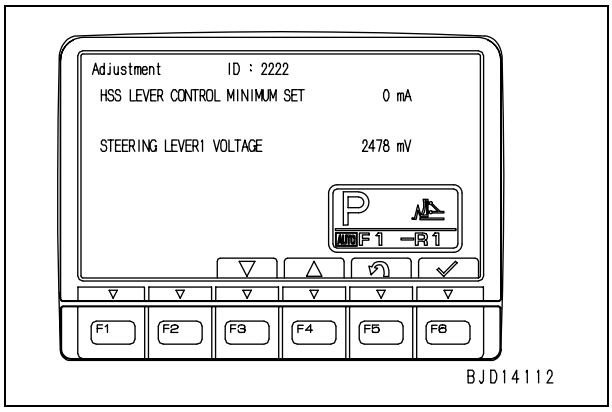

- This adjustment code is used to adjust the turning radius to start steering the machine when the steering feel is different by the steering direction.

★ Use this adjustment code for work when necessary.

- Functions of function switches
  [F3]: Unused
  [F4]: Unused
  [F5]: Return to adjustment item selecting screen (ID inputting screen)
  [F6]: Save adjustment value

- Operating method
  1) Set the parking brake lever in the free position.
  2) Tilt the PCCS lever to a right or left position at which the current to be set is indicated and hold it at that position.
     - If the lever is tilted to the left, the current becomes negative.
     - If the lever is tilted to the right, the current becomes positive.
  3) Press [F6] and check that the alarm buzzer sounds.

  ★ The current (mA) varies in the range from -350 (left end) to 350 (right end).
  ★ As the set current is increased in the positive or negative direction, the turning radius to start steering is reduced more (the machine is steered more quickly).
  ★ It is not necessary to steer the machine during adjustment. After finishing adjustment, however, steer the machine and check that there is not a problem in the actual steering feel.
  ★ The following figure shows an example of reducing the set current for the left steering to increase the turning radius.

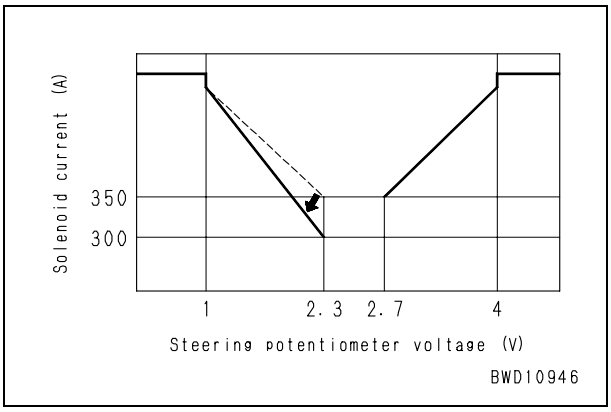

★ Even if this adjustment code is turned off, the adjustment is effective.

Adjustment ID: **6001** (R1 reverse slow set speed)

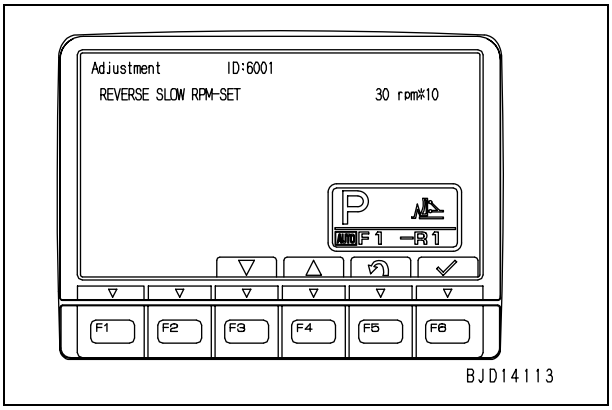

- This adjustment code is used to adjust the engine speed applied to travel at gear speed R1 with the reverse slow mode ON.

★ Use this adjustment code for work when necessary.

- Functions of function switches
  [F3]: Increase adjustment value
  [F4]: Decrease adjustment value
  [F5]: Return to adjustment item selecting screen (ID inputting screen)
  [F6]: Save adjustment value

- Information displayed on screen
  The speed reduced from the high idle speed (2,050 rpm) is displayed and the adjustment value is increased or decreased by 50 rpm (The value displayed on the screen is multiplied by 1/10).
  ★ The default adjustment value is 300 rpm (Displayed value: 30).
  (Default setting: 2,050 – 300 = 1,850 rpm)

- Operating method
  1) Increase or decrease the adjustment value by pressing [F3] or [F4].
  2) Press [F6] and check that the alarm buzzer sounds.
  ★ If the engine speed has been adjusted, it is displayed. It can be adjusted again within the adjustment range, however.
  ★ It is not necessary to drive the machine during adjustment. After finishing adjustment, however, drive the machine at R1 with the reverse slow mode ON and check that there is not a problem in the actual travel speed.
  ★ Even if this adjustment code is turned off, the adjustment is effective.

Adjustment ID: **6002** (R2 reverse slow set speed)

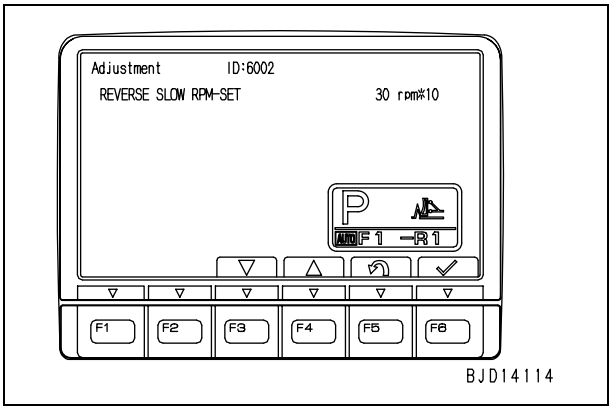

- This adjustment code is used to adjust the engine speed applied to travel at gear speed R2 with the reverse slow mode ON.

★ Use this adjustment code for work when necessary.

- Functions of function switches
  [F3]: Increase adjustment value
  [F4]: Decrease adjustment value
  [F5]: Return to adjustment item selecting screen (ID inputting screen)
  [F6]: Save adjustment value

- Information displayed on screen
  The speed reduced from the high idle speed (2,050 rpm) is displayed and the adjustment value is increased or decreased by 50 rpm (The value displayed on the screen is multiplied by 1/10).
  ★ The default adjustment value is 300 rpm (Displayed value: 30).
  (Default setting: 2,050 – 300 = 1,850 rpm)

- Operating method
  1) Increase or decrease the adjustment value by pressing [F3] or [F4].
  2) Press [F6] and check that the alarm buzzer sounds.
  ★ If the engine speed has been adjusted, it is displayed. It can be adjusted again within the adjustment range, however.
  ★ It is not necessary to drive the machine during adjustment. After finishing adjustment, however, drive the machine at R2 with the reverse slow mode ON and check that there is not a problem in the actual travel speed.
  ★ Even if this adjustment code is turned off, the adjustment is effective.

Adjustment ID: **6003** (R3 reverse slow set speed)

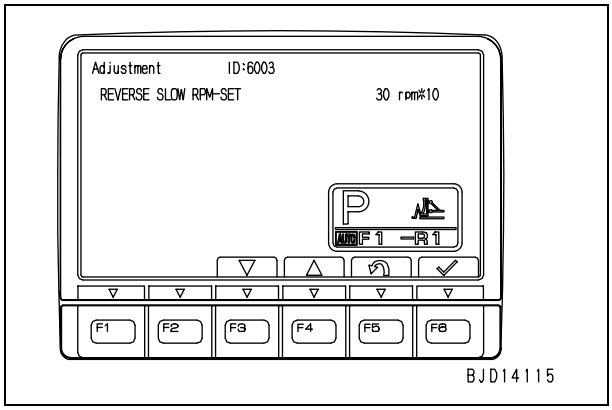

- This adjustment code is used to adjust the engine speed applied to travel at gear speed R3 with the reverse slow mode ON.

★ Use this adjustment code for work when necessary.

- Functions of function switches
  [F3]: Increase adjustment value
  [F4]: Decrease adjustment value
  [F5]: Return to adjustment item selecting screen (ID inputting screen)
  [F6]: Save adjustment value

- Information displayed on screen
  The speed reduced from the high idle speed (2,050 rpm) is displayed and the adjustment value is increased or decreased by 50 rpm (The value displayed on the screen is multiplied by 1/10).
  ★ The default adjustment value is 300 rpm (Displayed value: 30).
  (Default setting: 2,050 – 300 = 1,850 rpm)

- Operating method
  1) Increase or decrease the adjustment value by pressing [F3] or [F4].
  2) Press [F6] and check that the alarm buzzer sounds.
  ★ If the engine speed has been adjusted, it is displayed. It can be adjusted again within the adjustment range, however.
  ★ It is not necessary to drive the machine during adjustment. After finishing adjustment, however, drive the machine at R3 with the reverse slow mode ON and check that there is not a problem in the actual travel speed.
  ★ Even if this adjustment code is turned off, the adjustment is effective.

Adjustment ID: **7842** (Transmission clutch IP automatic initial correction)

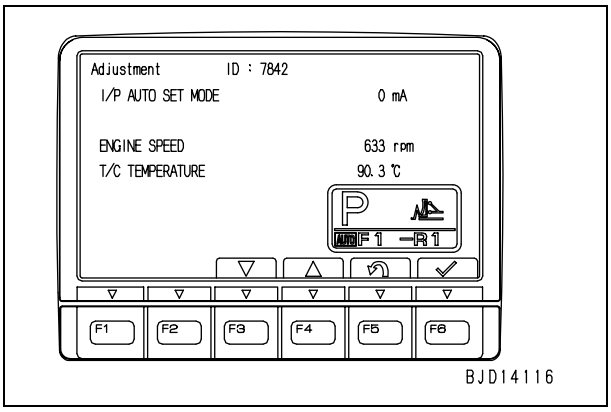

- This adjustment code is used to make the power train controller recognize the mechanical condition of the transmission.

★ After the power train controller or transmission is replaced, be sure to carry out this adjustment once.

- Functions of function switches
  [F3]: Unused
  [F4]: Unused
  [F5]: Return to adjustment item selecting screen (ID inputting screen)
  [F6]: Save adjustment value

- Conditions for correction work
  1) [ENGINE SPEED]: 1,700 – 1,950 rpm
  2) [T/C TEMPERATURE]: 65 – 85 °C
  3) Parking brake lever: LOCK position
  ★ When using this adjustment code, keep the above conditions (In particular, increase the power train oil temperature sufficiently before starting adjustment).

- Operating method:
  1) Start the engine and keep its speed in the specified range of condition with the fuel control dial.
  2) Press [F6] and start the correction work and check that [1ST CLUTCH] is displayed newly on the screen.
  3) If [END OF TEACHING] is displayed on the screen, press [F6]. If the alarm buzzer sounds at this time, correction work is completed.
  ★ The machine does not move during the correction work.
  ★ Even if this adjustment code is turned off, the correction is effective.

Adjustment ID: **7843** (Transmission clutch IP manual initial correction)

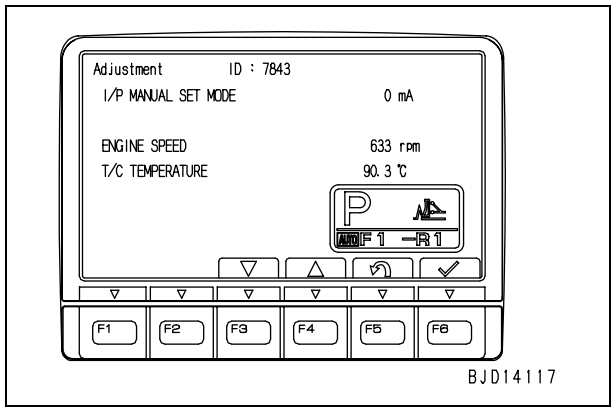

- This adjustment code is used to carry out correction manually when the correction is not carried out normally by the operation of IP automatic correction (Adjustment ID: **7842**).

★ Use this adjustment code after the IP correction work, if necessary.

- Functions of function switches
  [F3]: Increase adjustment value
  [F4]: Decrease adjustment value
  [F5]: Return to adjustment item selecting screen (ID inputting screen)
  [F6]: Save adjustment value
  ★ If [F2] is pressed while [F1] is pressed, all the correction values are set to 0.

- Functions of shift-up and shift-down switches
  You can select a clutch to be corrected manually with the shift-up and shift-down switches.

- Conditions for correction work
  Same as the conditions for IP automatic correction (Adjustment ID: **7842**).

- Operating method:
  1) Start the engine and keep its speed in the specified range of condition with the fuel control dial.
  2) Select a clutch to be corrected manually with the shift-up or shift-down switches.
  3) Increase or decrease the adjustment value by pressing [F3] or [F4].
  4) Press [F6] and check that the alarm buzzer sounds.
  ★ The machine does not move during the correction work.
  ★ Even if this adjustment code is turned off, the correction is effective.

Adjustment ID: **7845** (Transmission clutch IP learning display)

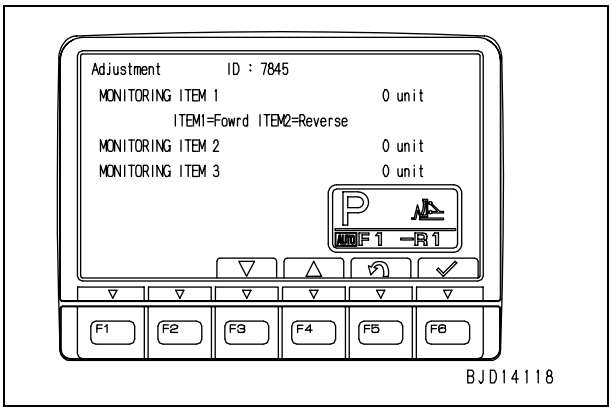

- This adjustment code is used to check the information of correction made by the operation of IP automatic correction (Adjustment ID: **7842**) or IP manual correction (Adjustment ID: **7843**).

★ Use this adjustment code for testing, adjusting, or troubleshooting when necessary.

- Functions of function switches
  [F3]: Change display
  [F4]: Change display
  [F5]: Return to adjustment item selecting screen (ID inputting screen)
  [F6]: Unused

- Operating method
  When this adjustment code is displayed, its function is effective and the correction information is displayed.
  ★ After this adjustment code is turned OFF, its function is ineffective.

Adjustment ID: **8000** (Blade lift lever neutral position adjustment)

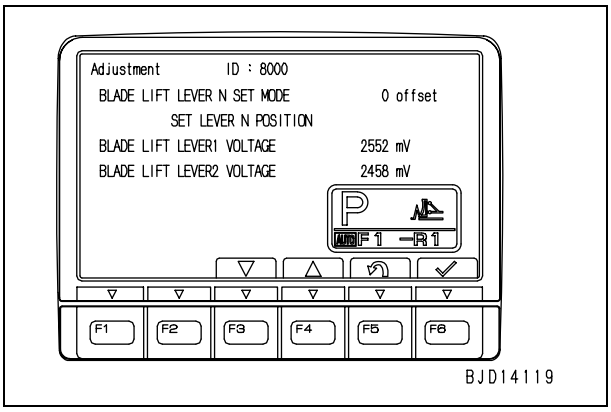

- This adjustment code is used to make the work equipment controller recognize the neutral position of the lift potentiometer of the blade control lever.

★ After the work equipment controller or blade control lever is replaced, be sure to carry out this adjustment once.

- Functions of function switches
  [F3]: Unused
  [F4]: Unused
  [F5]: Return to adjustment item selecting screen (ID inputting screen)
  [F6]: Save adjustment value

- Operating method
  1) Check that the blade control lever is in the neutral position of the lifting direction and keep it in that position.
  2) Press [F6] and check that the alarm buzzer sounds.
  ★ Even if the adjustment is carried out, the displayed value does not change.
  ★ Even if this adjustment code is turned off, the adjustment is effective.
  ★ This adjustment code is used to make the controller recognize the neutral position of the potentiometer. It is not used to adjust the sensitivity of the blade control lever (For adjustment of the sensitivity of the blade control lever in the lifting direction, carry out adjustment codes **8020** – **8023**).

Adjustment ID: **8001** (Blade lift lever max. raising position adjustment)

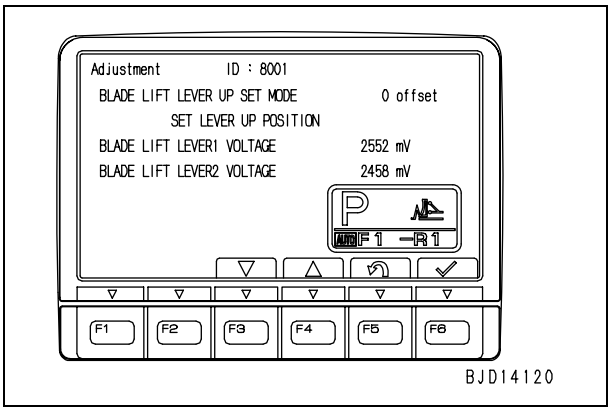

- This adjustment code is used to make the work equipment controller recognize the maximum raising position of the lift potentiometer of the blade control lever.

★ After the work equipment controller or blade control lever is replaced, be sure to carry out this adjustment once.

- Functions of function switches
  [F3]: Unused
  [F4]: Unused
  [F5]: Return to adjustment item selecting screen (ID inputting screen)
  [F6]: Save adjustment value

- Operating method
  1) Operate the blade control lever to the raising stroke end of the lifting direction and keep it in that position.
  2) Press [F6] and check that the alarm buzzer sounds.
  ★ Even if the adjustment is carried out, the displayed value does not change.
  ★ Even if this adjustment code is turned off, the adjustment is effective.
  ★ This adjustment code is used to make the controller recognize the maximum raising position of the potentiometer. It is not used to adjust the sensitivity of the blade control lever (For adjustment of the sensitivity of the blade control lever in the lifting direction, carry out adjustment codes **8020** – **8023**).

Adjustment ID: **8002** (Blade lift lever max. lowering position adjustment)

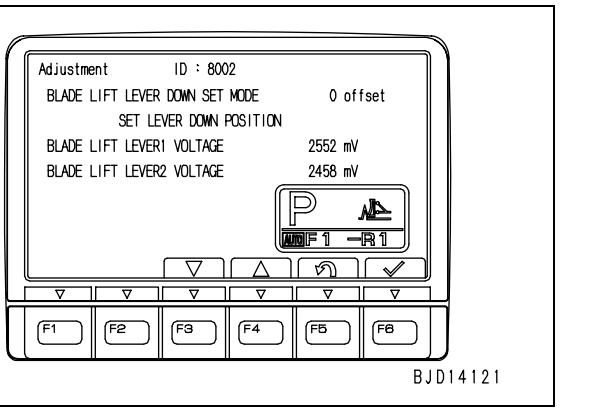

- This adjustment code is used to make the work equipment controller recognize the maximum lowering position of the lift potentiometer of the blade control lever.

★ After the work equipment controller or blade control lever is replaced, be sure to carry out this adjustment once.

- Functions of function switches
  [F3]: Unused
  [F4]: Unused
  [F5]: Return to adjustment item selecting screen (ID inputting screen)
  [F6]: Save adjustment value

- Operating method
  1) Operate the blade control lever to the lowering stroke end of the lifting direction and keep it in that position.
  2) Press [F6] and check that the alarm buzzer sounds.
  ★ Even if the adjustment is carried out, the displayed value does not change.
  ★ Even if this adjustment code is turned off, the adjustment is effective.
  ★ This adjustment code is used to make the controller recognize the maximum lowering position of the potentiometer. It is not used to adjust the sensitivity of the blade control lever (For adjustment of the sensitivity of the blade control lever in the lifting direction, carry out adjustment codes **8020** – **8023**).

Adjustment ID: **8003** (Blade tilt lever neutral position adjustment)

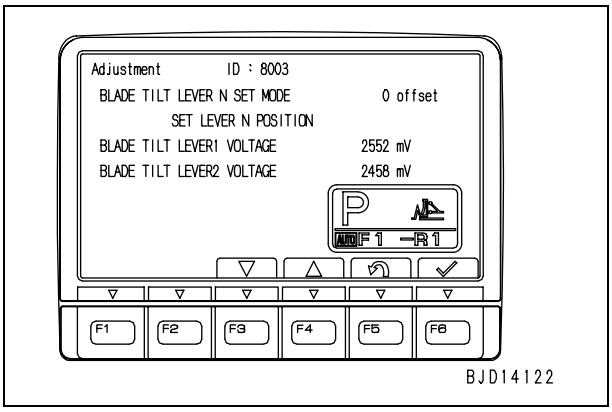

- This adjustment code is used to make the work equipment controller recognize the neutral position of the tilt potentiometer of the blade control lever.

★ After the work equipment controller or blade control lever is replaced, be sure to carry out this adjustment once.

- Functions of function switches
  [F3]: Unused
  [F4]: Unused
  [F5]: Return to adjustment item selecting screen (ID inputting screen)
  [F6]: Save adjustment value

- Operating method
  1) Check that the blade control lever is in the neutral position of the tilting direction and keep it in that position.
  2) Press [F6] and check that the alarm buzzer sounds.
  ★ Even if the adjustment is carried out, the displayed value does not change.
  ★ Even if this adjustment code is turned off, the adjustment is effective.
  ★ This adjustment code is used to make the controller recognize the neutral position of the potentiometer. It is not used to adjust the sensitivity of the blade control lever (For adjustment of the sensitivity of the blade control lever in the tilting direction, carry out adjustment codes **8024** and **8025**).

Adjustment ID: **8004** (Blade tilt lever rightmost position adjustment)

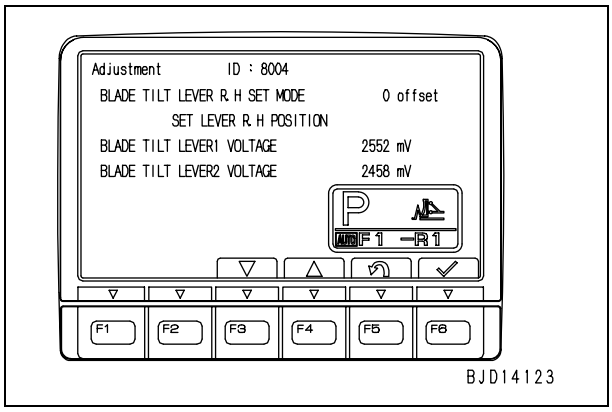

- This adjustment code is used to make the work equipment controller recognize the rightmost position of the tilt potentiometer of the blade control lever.

★ After the work equipment controller or blade control lever is replaced, be sure to carry out this adjustment once.

- Functions of function switches
  [F3]: Unused
  [F4]: Unused
  [F5]: Return to adjustment item selecting screen (ID inputting screen)
  [F6]: Save adjustment value

- Operating method
  1) Operate the blade control lever to the right stroke end of the tilting direction and keep it in that position.
  2) Press [F6] and check that the alarm buzzer sounds.
  ★ Even if the adjustment is carried out, the displayed value does not change.
  ★ Even if this adjustment code is turned off, the adjustment is effective.
  ★ This adjustment code is used to make the controller recognize the rightmost position of the potentiometer. It is not used to adjust the sensitivity of the blade control lever (For adjustment of the sensitivity of the blade control lever in the tilting direction, carry out adjustment codes **8024** and **8025**).

Adjustment ID: **8005** (Blade tilt lever leftmost position adjustment)

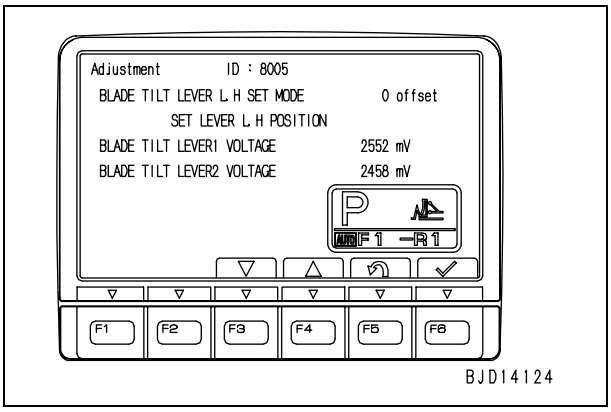

- This adjustment code is used to make the work equipment controller recognize the leftmost position of the tilt potentiometer of the blade control lever.

★ After the work equipment controller or blade control lever is replaced, be sure to carry out this adjustment once.

- Functions of function switches
  [F3]: Unused
  [F4]: Unused
  [F5]: Return to adjustment item selecting screen (ID inputting screen)
  [F6]: Save adjustment value

- Operating method
  1) Operate the blade control lever to the left stroke end of the tilting direction and keep it in that position.
  2) Press [F6] and check that the alarm buzzer sounds.
  ★ Even if the adjustment is carried out, the displayed value does not change.
  ★ Even if this adjustment code is turned off, the adjustment is effective.
  ★ This adjustment code is used to make the controller recognize the leftmost position of the potentiometer. It is not used to adjust the sensitivity of the blade control lever (For adjustment of the sensitivity of the blade control lever in the tilting direction, carry out adjustment codes **8024** and **8025**).

Adjustment ID: **8006** (Ripper lift lever neutral position adjustment)

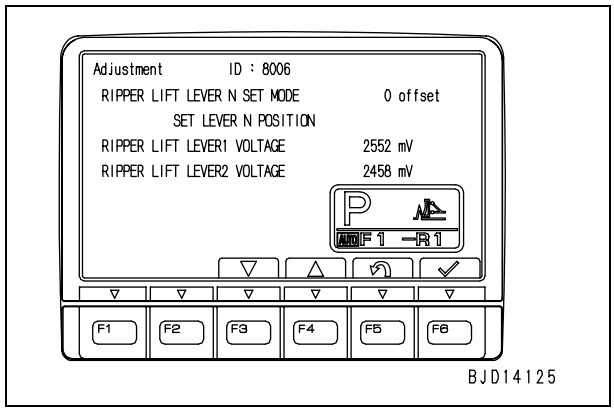

- This adjustment code is used to make the work equipment controller recognize the neutral position of the lift potentiometer of the ripper control lever.

★ After the work equipment controller or ripper control lever is replaced, be sure to carry out this adjustment once.

- Functions of function switches
  [F3]: Unused
  [F4]: Unused
  [F5]: Return to adjustment item selecting screen (ID inputting screen)
  [F6]: Save adjustment value

- Operating method
  1) Check that the ripper control lever is in the neutral position of the lifting direction and keep it in that position.
  2) Press [F6] and check that the alarm buzzer sounds.
  ★ Even if the adjustment is carried out, the displayed value does not change.
  ★ Even if this adjustment code is turned off, the adjustment is effective.
  ★ This adjustment code is used to make the controller recognize the neutral position of the potentiometer. It is not used to adjust the sensitivity of the ripper control lever.

Adjustment ID: **8007** (Ripper lift lever max. raising position adjustment)

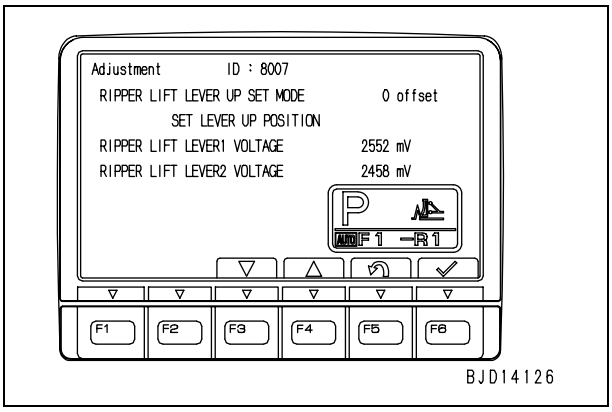

- This adjustment code is used to make the work equipment controller recognize the maximum raising position of the lift potentiometer of the ripper control lever.

★ After the work equipment controller or ripper control lever is replaced, be sure to carry out this adjustment once.

- Functions of function switches
  [F3]: Unused
  [F4]: Unused
  [F5]: Return to adjustment item selecting screen (ID inputting screen)
  [F6]: Save adjustment value

- Operating method
  1) Operate the ripper control lever to the raising stroke end of the lifting direction and keep it in that position.
  2) Press [F6] and check that the alarm buzzer sounds.
  ★ Even if the adjustment is carried out, the displayed value does not change.
  ★ Even if this adjustment code is turned off, the adjustment is effective.
  ★ This adjustment code is used to make the controller recognize the maximum raising position of the potentiometer. It is not used to adjust the sensitivity of the ripper control lever.

Adjustment ID: **8008** (Ripper lift lever max. lowering position adjustment)

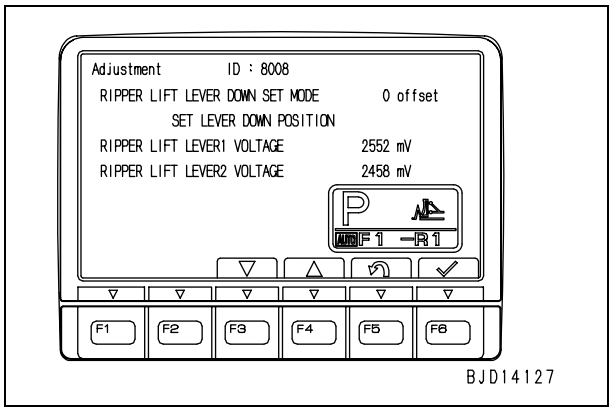

- This adjustment code is used to make the work equipment controller recognize the maximum lowering position of the lift potentiometer of the ripper control lever.

★ After the work equipment controller or ripper control lever is replaced, be sure to carry out this adjustment once.

- Functions of function switches
  [F3]: Unused
  [F4]: Unused
  [F5]: Return to adjustment item selecting screen (ID inputting screen)
  [F6]: Save adjustment value

- Operating method
  1) Operate the ripper control lever to the lowering stroke end of the lifting direction and keep it in that position.
  2) Press [F6] and check that the alarm buzzer sounds.
  ★ Even if the adjustment is carried out, the displayed value does not change.
  ★ Even if this adjustment code is turned off, the adjustment is effective.
  ★ This adjustment code is used to make the controller recognize the maximum lowering position of the potentiometer. It is not used to adjust the sensitivity of the ripper control lever.

Adjustment ID: **8009** (Ripper tilt lever neutral position adjustment)

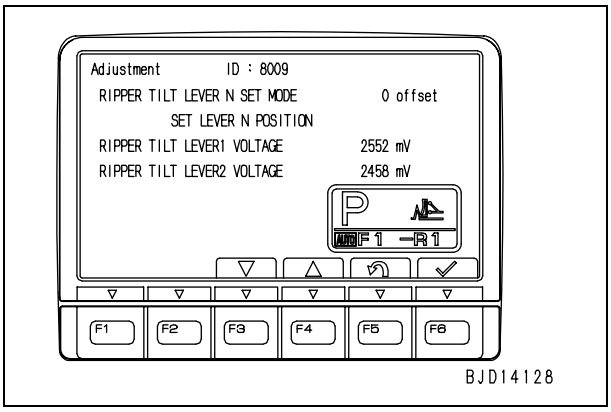

- This adjustment code is used to make the work equipment controller recognize the neutral position of the tilt potentiometer of the ripper control lever.

★ After the work equipment controller or ripper control lever is replaced, be sure to carry out this adjustment once.

- Functions of function switches
  [F3]: Unused
  [F4]: Unused
  [F5]: Return to adjustment item selecting screen (ID inputting screen)
  [F6]: Save adjustment value

- Operating method
  1) Check that the ripper control lever is in the neutral position of the tilting direction and keep it in that position.
  2) Press [F6] and check that the alarm buzzer sounds.
  ★ Even if the adjustment is carried out, the displayed value does not change.
  ★ Even if this adjustment code is turned off, the adjustment is effective.
  ★ This adjustment code is used to make the controller recognize the neutral position of the potentiometer. It is not used to adjust the sensitivity of the ripper control lever.

Adjustment ID: **8010** (Ripper tilt lever max. IN position adjustment)

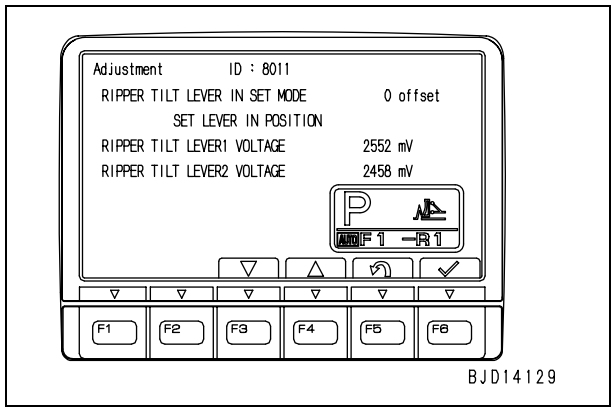

- This adjustment code is used to make the work equipment controller recognize the maximum IN position of the tilt potentiometer of the ripper control lever.

★ After the work equipment controller or ripper control lever is replaced, be sure to carry out this adjustment once.

- Functions of function switches
  [F3]: Unused
  [F4]: Unused
  [F5]: Return to adjustment item selecting screen (ID inputting screen)
  [F6]: Save adjustment value

- Operating method
  1) Operate the ripper control lever to the IN stroke end of the tilting direction and keep it in that position.
  2) Press [F6] and check that the alarm buzzer sounds.
  ★ Even if the adjustment is carried out, the displayed value does not change.
  ★ Even if this adjustment code is turned off, the adjustment is effective.
  ★ This adjustment code is used to make the controller recognize the maximum IN position of the potentiometer. It is not used to adjust the sensitivity of the ripper control lever.

Adjustment ID: **8011** (Ripper tilt lever max. BACK position adjustment)

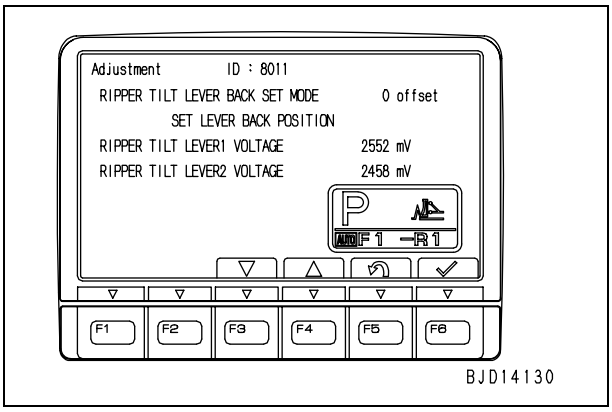

- This adjustment code is used to make the work equipment controller recognize the maximum BACK position of the tilt potentiometer of the ripper control lever.

★ After the work equipment controller or ripper control lever is replaced, be sure to carry out this adjustment once.

- Functions of function switches
  [F3]: Unused
  [F4]: Unused
  [F5]: Return to adjustment item selecting screen (ID inputting screen)
  [F6]: Save adjustment value

- Operating method
  1) Operate the ripper control lever to the BACK stroke end of the tilting direction and keep it in that position.
  2) Press [F6] and check that the alarm buzzer sounds.
  ★ Even if the adjustment is carried out, the displayed value does not change.
  ★ Even if this adjustment code is turned off, the adjustment is effective.
  ★ This adjustment code is used to make the controller recognize the maximum BACK position of the potentiometer. It is not used to adjust the sensitivity of the ripper control lever.

Adjustment ID: **8020** (Blade raising current correction)

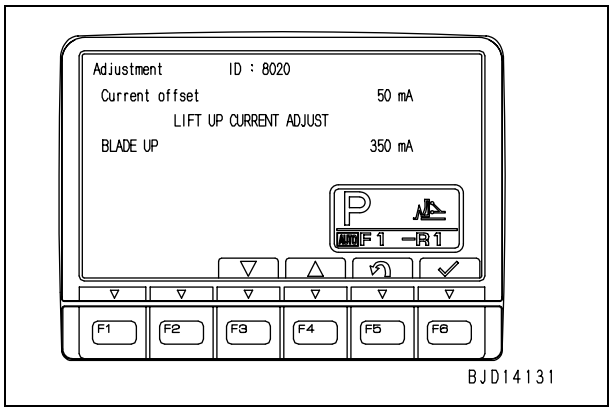

- This adjustment code is used to adjust the sensitivity of start of blade when the blade control lever is moved in the raising position with the blade fine mode OFF.

★ Use this adjustment code for work when necessary.

- Functions of function switches
  [F3]: Increase adjustment value [Current offset]
  [F4]: Decrease adjustment value [Current offset]
  [F5]: Return to adjustment item selecting screen (ID inputting screen)
  [F6]: Save adjustment value

- Operating method
  1) Increase or decrease the adjustment value by pressing [F3] or [F4].
  2) Press [F6] and check that the alarm buzzer sounds.
  ★ If the engine speed has been adjusted, it is displayed. It can be adjusted repeatedly, however.
  ★ It is not necessary to move the blade during adjustment. After finishing adjustment, however, raise the blade and check that there is not a problem in the actual operation feel (Check with the blade fine control mode OFF).
  ★ Even if this adjustment code is turned off, the adjustment is effective.

Adjustment ID: **8021** (Blade lowering current correction)

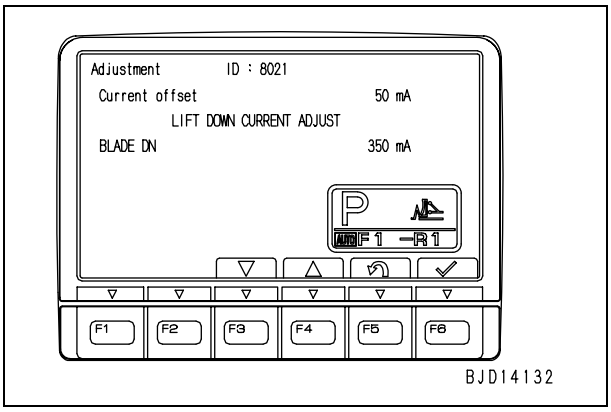

- This adjustment code is used to adjust the sensitivity of start of blade when the blade control lever is moved in the lowering position with the blade fine mode OFF.

★ Use this adjustment code for work when necessary.

- Functions of function switches
  [F3]: Increase adjustment value [Current offset]
  [F4]: Decrease adjustment value [Current offset]
  [F5]: Return to adjustment item selecting screen (ID inputting screen)
  [F6]: Save adjustment value

- Operating method
  1) Increase or decrease the adjustment value by pressing [F3] or [F4].
  2) Press [F6] and check that the alarm buzzer sounds.
  ★ If the engine speed has been adjusted, it is displayed. It can be adjusted repeatedly, however.
  ★ It is not necessary to move the blade during adjustment. After finishing adjustment, however, lower the blade and check that there is not a problem in the actual operation feel (Check with the blade fine control mode OFF).
  ★ Even if this adjustment code is turned off, the adjustment is effective.

Adjustment ID: **8022** (Blade raising current correction (Fine control mode))

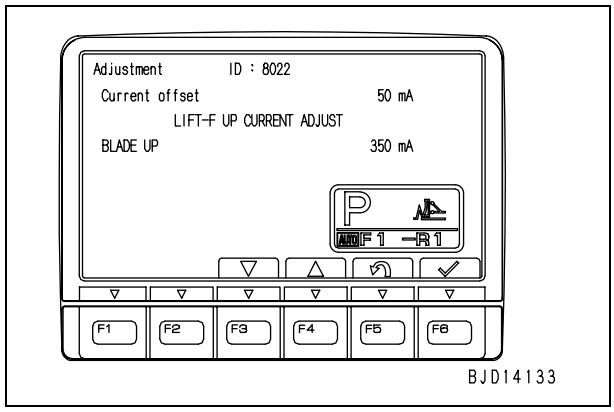

- This adjustment code is used to adjust the sensitivity of start of blade when the blade control lever is moved in the raising position with the blade fine mode ON.

★ Use this adjustment code for work when necessary.

- Functions of function switches
  [F3]: Increase adjustment value [Current offset]
  [F4]: Decrease adjustment value [Current offset]
  [F5]: Return to adjustment item selecting screen (ID inputting screen)
  [F6]: Save adjustment value

- Operating method
  1) Increase or decrease the adjustment value by pressing [F3] or [F4].
  2) Press [F6] and check that the alarm buzzer sounds.
  ★ If the engine speed has been adjusted, it is displayed. It can be adjusted repeatedly, however.
  ★ It is not necessary to move the blade during adjustment. After finishing adjustment, however, raise the blade and check that there is not a problem in the actual operation feel (Check with the blade fine control mode ON).
  ★ Even if this adjustment code is turned off, the adjustment is effective.

Adjustment ID: **8023** (Blade lowering current correction (Fine control mode))

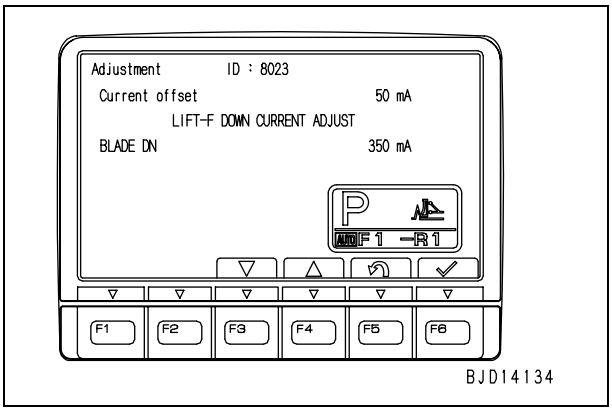

- This adjustment code is used to adjust the sensitivity of start of blade when the blade control lever is moved in the lowering position with the blade fine mode ON.

★ Use this adjustment code for work when necessary.

- Functions of function switches
  [F3]: Increase adjustment value [Current offset]
  [F4]: Decrease adjustment value [Current offset]
  [F5]: Return to adjustment item selecting screen (ID inputting screen)
  [F6]: Save adjustment value

- Operating method
  1) Increase or decrease the adjustment value by pressing [F3] or [F4].
  2) Press [F6] and check that the alarm buzzer sounds.
  ★ If the engine speed has been adjusted, it is displayed. It can be adjusted repeatedly, however.
  ★ It is not necessary to move the blade during adjustment. After finishing adjustment, however, lower the blade and check that there is not a problem in the actual operation feel (Check with the blade fine control mode ON).
  ★ Even if this adjustment code is turned off, the adjustment is effective.

Adjustment ID: **8024** (Blade tilting left current correction)

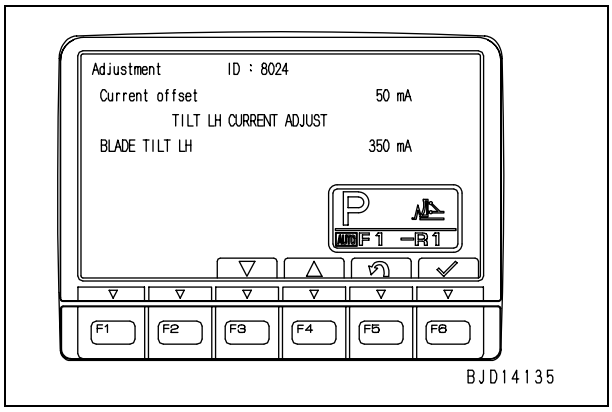

- This adjustment code is used to adjust the sensitivity of start of blade when the blade control lever is moved in the tilting left position.

★ Use this adjustment code for work when necessary.

- Functions of function switches
  [F3]: Increase adjustment value [Current offset]
  [F4]: Decrease adjustment value [Current offset]
  [F5]: Return to adjustment item selecting screen (ID inputting screen)
  [F6]: Save adjustment value

- Operating method
  1) Increase or decrease the adjustment value by pressing [F3] or [F4].
  2) Press [F6] and check that the alarm buzzer sounds.
  ★ If the engine speed has been adjusted, it is displayed. It can be adjusted repeatedly, however.
  ★ It is not necessary to move the blade during adjustment. After finishing adjustment, however, tilt the blade to the left and check that there is not a problem in the actual operation feel.
  ★ Even if this adjustment code is turned off, the adjustment is effective.

Adjustment ID: **8025** (Blade tilting right current correction)

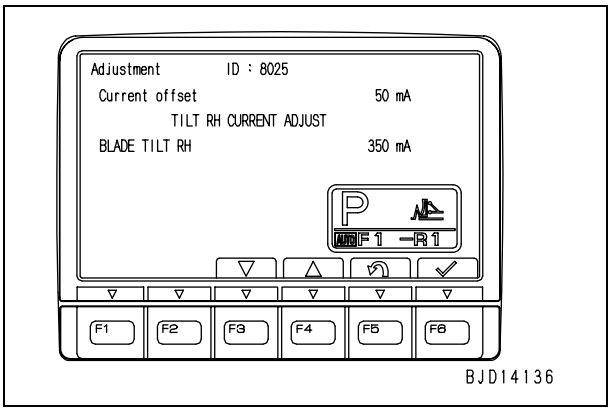

- This adjustment code is used to adjust the sensitivity of start of blade when the blade control lever is moved in the tilting right position.

★ Use this adjustment code for work when necessary.

- Functions of function switches
  [F3]: Increase adjustment value [Current offset]
  [F4]: Decrease adjustment value [Current offset]
  [F5]: Return to adjustment item selecting screen (ID inputting screen)
  [F6]: Save adjustment value

- Operating method
  1) Increase or decrease the adjustment value by pressing [F3] or [F4].
  2) Press [F6] and check that the alarm buzzer sounds.
  ★ If the engine speed has been adjusted, it is displayed. It can be adjusted repeatedly, however.
  ★ It is not necessary to move the blade during adjustment. After finishing adjustment, however, tilt the blade to the right and check that there is not a problem in the actual operation feel.
  ★ Even if this adjustment code is turned off, the adjustment is effective.

Adjustment ID: **9995** (Control brake release mode)

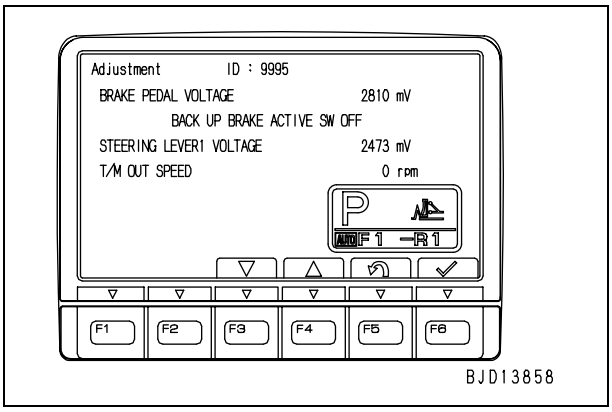

- This adjustment code is used to release the control brake (right and left brake ECMV) to check the operation of the backup brake (brake pedal solenoid valve).

★ Use this adjustment code for testing, adjusting, or troubleshooting when necessary.

- Functions of function switches
  [F3]: Unused
  [F4]: Unused
  [F5]: Return to adjustment item selecting screen (ID inputting screen)
  [F6]: Unused

- Operating method
  When this adjustment code is displayed, its function is effective and the control brake (right and left brake ECMV) is kept released.
  ★ After this adjustment code is turned OFF, its function is ineffective.

Adjustment ID: **9996** (Sudden stop prevent valve operation mode)

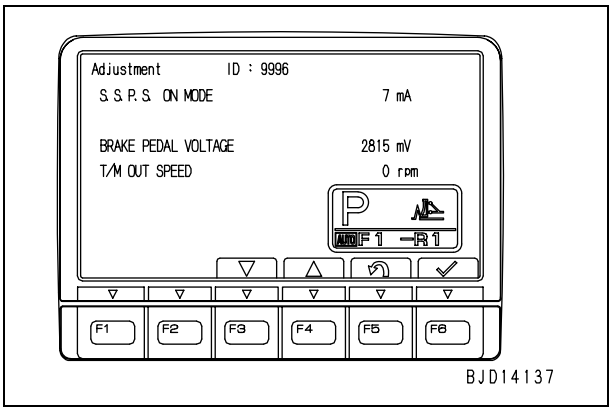

- This adjustment code is used to stop the sudden stop prevent solenoid valve and right and left brake ECMV to check the operation of the sudden stop prevent valve.

★ Use this adjustment code for testing, adjusting, or troubleshooting when necessary.

- Functions of function switches
  [F3]: Unused
  [F4]: Unused
  [F5]: Return to adjustment item selecting screen (ID inputting screen)
  [F6]: Unused

- Operating method
  When this adjustment code is displayed, its function is effective and the sudden stop prevent solenoid valve and right and left brake ECMV are kept stopped.
  ★ After this adjustment code is turned OFF, its function is ineffective.

Adjustment ID: **9997** (High idle cut mode)

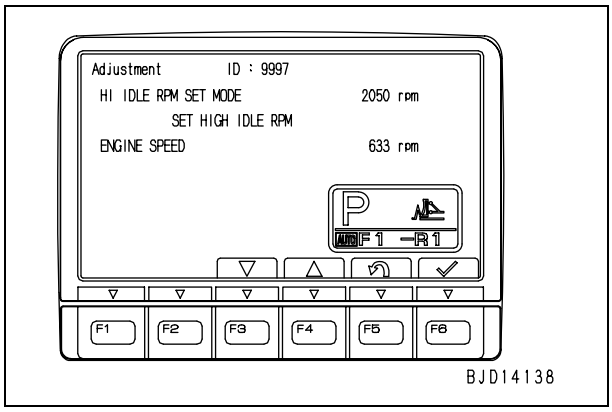

- This adjustment code is used to limit the high idle speed.

★ Use this adjustment code for work when necessary.

- Functions of function switches
  [F3]: Increase adjustment value [HIGH IDLE RPM SET MODE]
  [F4]: Decrease adjustment value [HIGH IDLE RPM SET MODE]
  [F5]: Return to adjustment item selecting screen (ID inputting screen)
  [F6]: Save adjustment value

- Operating method
  1) Increase or decrease the adjustment value by pressing [F3] or [F4].
  2) Press [F6] and check that the alarm buzzer sounds.
  ★ When resetting the limitation of the high idle speed, set the adjustment value to the original high idle speed (2,050 rpm).
  ★ Even if this adjustment code is turned off, the adjustment is effective.

Adjustment ID: **9998** (Max. gear speed setting mode)

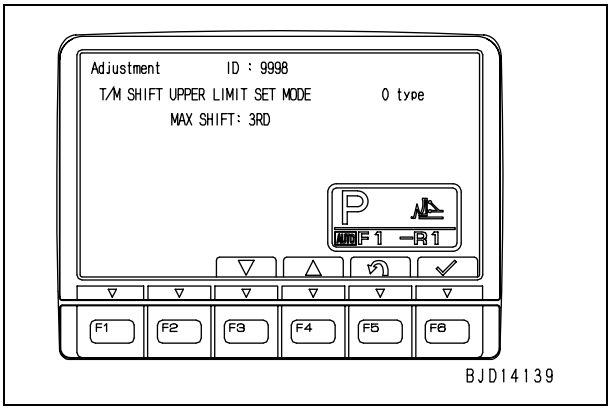

- This adjustment code is used to limit the maximum transmission gear speed.
- The limited gear speed is applied in both automatic gearshift mode and manual gearshift mode.

★ Use this adjustment code for work when necessary.

- Functions of function switches
  [F3]: Increase adjustment value [MAX SHIFT]
  [F4]: Decrease adjustment value [MAX SHIFT]
  [F5]: Return to adjustment item selecting screen (ID inputting screen)
  [F6]: Save adjustment value

- Operating method
  1) Increase or decrease the adjustment value by pressing [F3] or [F4].
  2) Press [F6] and check that the alarm buzzer sounds.

  ★ When resetting the limitation of the maximum gear speed, set the adjustment value to the maximum gear speed (3RD).

  ★ Even if this adjustment code is turned off, the adjustment is effective.

Pm Clinic

The machine monitor can check the condition of the machine without connecting testing tools to assist the Pm Clinic and other periodic inspections.

1. Selecting menu
   Select "08 PM CLINIC" on the Service menu screen.

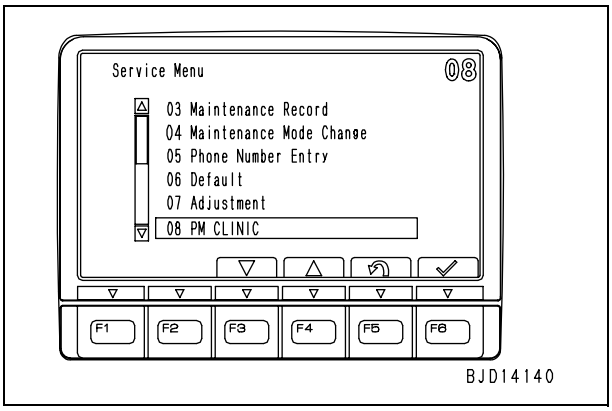

2. Information displayed on Pm Clinic screen
   The Pm Clinic function displays the following information on 2 pages.
   - 1st screen

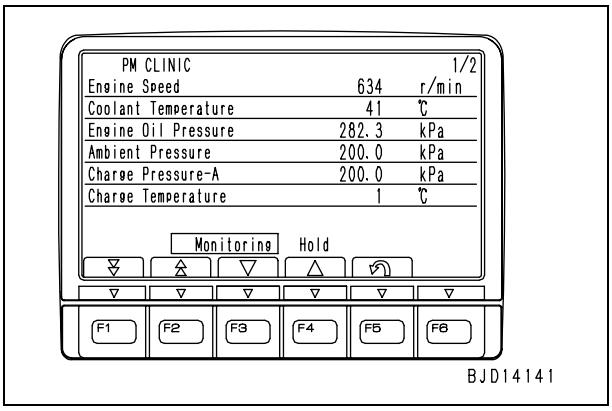

   - 2nd screen

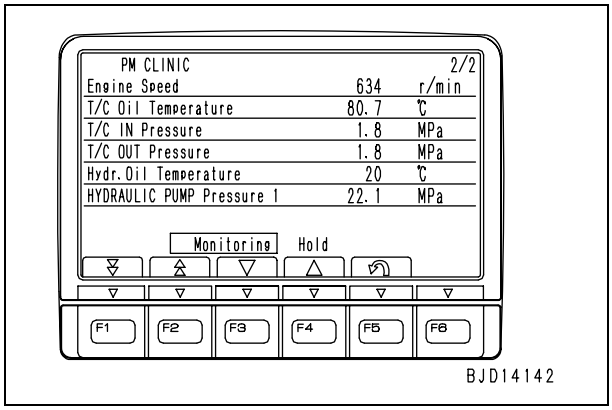

   - [F1]: Change screen
   - [F2]: Change screen
   - [F3]: Reset holding
   - [F4]: Hold (displayed data)
   - [F5]: Return to service menu screen

3. Holding displayed information
   The displayed information can be held and released with [F3] and [F4].

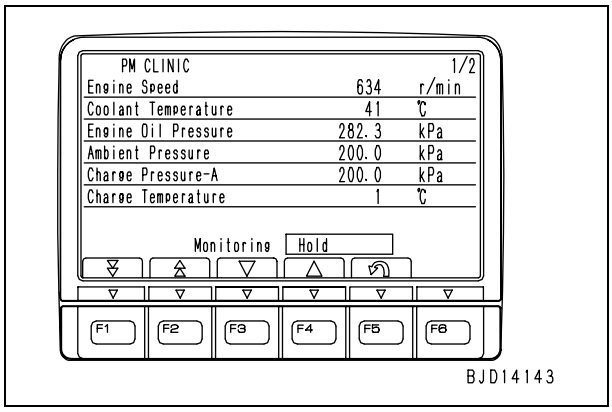

Cylinder Cut-Out operation

The operator can perform Cylinder Cut-Out operation with the machine monitor.
Reduced cylinder mode operation means to run the engine with 1 or more fuel injectors disabled electrically to reduce the number of effective cylinders. This operation is used to find out a cylinder which does not output power normally (combustion in it is abnormal).

1. Selecting menu
   Select "09 Cylinder Cut-Out" on the "Service Menu" screen.

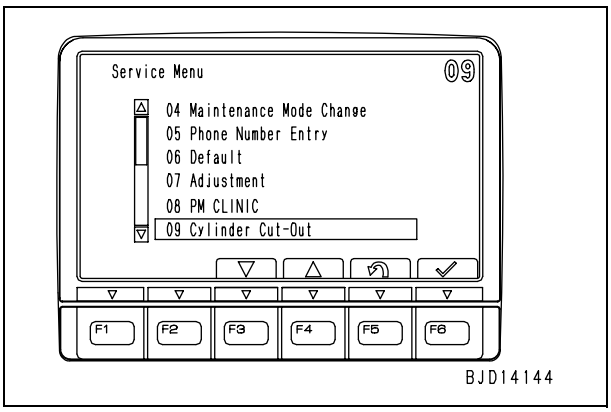

2. Selecting cylinder to be disabled
   After the "Cylinder Cut-Out" screen is displayed, select a cylinder to be disabled with the function switches.
   - [F1]: Move selection mark (▽) to left
   - [F2]: Move selection mark (▽) to right
   - [F3]: Reset holding
   - [F4]: Hold
   - [F5]: Return to service menu screen
   - [F6]: Confirm selection
   - ★ This operation may be performed while the engine is running.
   - ★ When [F6] is pressed, if background (a) of the selected cylinder No. becomes white, the cylinder is disabled.
   - ★ If the machine monitor disables a cylinder but the engine controller cannot disable that cylinder, the background of the cylinder No. becomes yellow.
   - ★ One or more cylinders can be disabled.

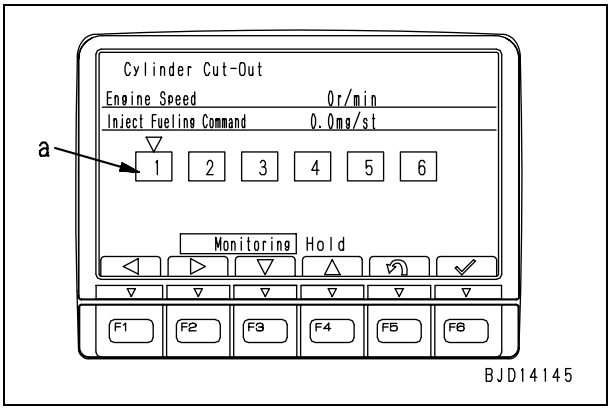

3. Resetting disabled cylinder
   When changing a cylinder to be disabled or when reduced cylinder mode operation is finished, select a disabled cylinder to be reset with the function switches.
   - ★ This operation may be performed while the engine is running.
   - ★ When [F6] is pressed, if background (a) of the selected cylinder No. becomes light blue, the cylinder is reset.
   - ★ If the machine monitor rests a disabled cylinder but the engine controller cannot reset that disabled cylinder, the background of the cylinder No. becomes red.
   - ★ The reduced cylinder mode operation is not automatically reset after the screen returns to the operator mode. Accordingly, be sure to perform the resetting operation after the reduced cylinder mode operation is finished.

4. Function of holding displayed information
   If [F4] is pressed during the reduced cylinder mode operation, the displayed information is newly held (c) (The real-time information is kept displayed on the left side).
   - ★ While the information is held, if [F3] is pressed, the holding function is reset.
   - ★ The holding function is effective, regardless of setting of the reduced cylinder mode operation.

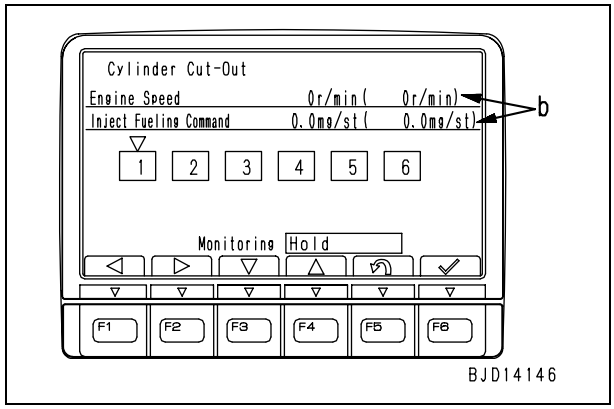

[Reference]

- If a normally operating cylinder is disabled, the following phenomena occur.
  1) Lowering of engine speed
  2) Increase of final injection rate command (quantity)
- If the engine is running near the high idle, however, the engine speed may not lower for the reason of engine control.
- In this case, lower the engine speed with the fuel control dial and judge by increase of the injection rate command.

Display of No Injection

If the engine is operated after long storage of the machine, it may be worn or damaged because of insufficient lubrication with oil. To prevent this, the function to lubricate the engine before starting it by cranking it without injecting fuel is installed.
Set the No Injection while the engine is stopped.

1. Selecting menu
   Select "10 No Injection" on the "Service Menu" screen.

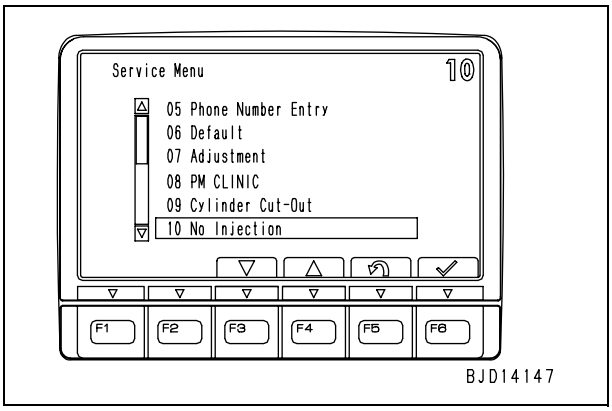

2. Displaying check screen
   If the "No Injection" screen is displayed, the machine monitor asks the operator if no-injection cranking should be performed. Answer with the function switch.
   - [F5]: Do not perform (Return to Service menu screen)
   - [F6]: Perform
   - ★ While the screen is changing to the following screen, the screen of "Communication between controllers is being checked" is displayed.

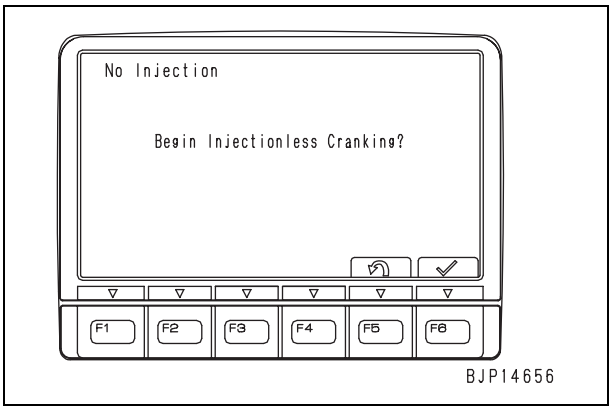

3. Starting no-injection cranking
   If no-injection cranking (Fuel injection in no cylinders) becomes effective, that is displayed on the screen. Under this condition, crank the engine with the starting motor.
   - ★ While the screen is changing to the following screen, the screen of "Setting is being prepared" is displayed.
   - ★ Limit the cranking time to 20 seconds to protect the starting motor.

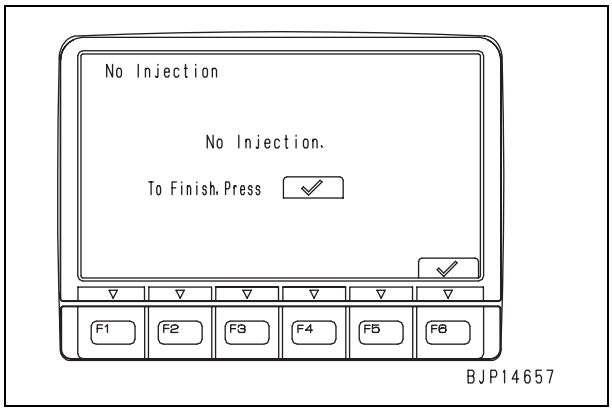

4. Finishing no-injection cranking
   After completing the no-injection cranking operation, press [F6], and finish of no-injection cranking is displayed and the screen returns to the "Service Menu" screen automatically.

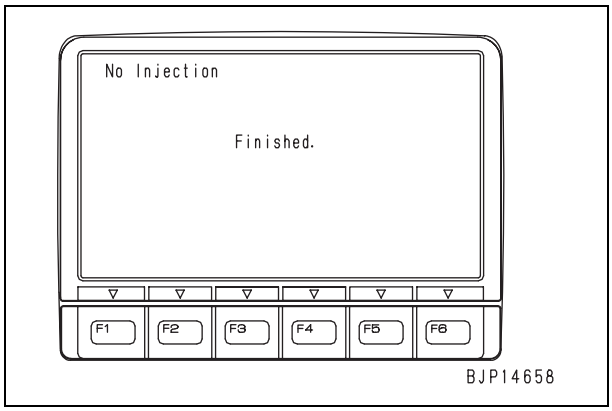

5. Prohibiting no-injection cranking
   If the operator tries to perform the no-injection cranking while the engine is running, the message that the engine is running is displayed and the no-injection cranking is not set effective.
   - ★ This function can be selected even while the engine is running. If the no-injection cranking is performed, however, the message of "Engine is running" is displayed on the screen.

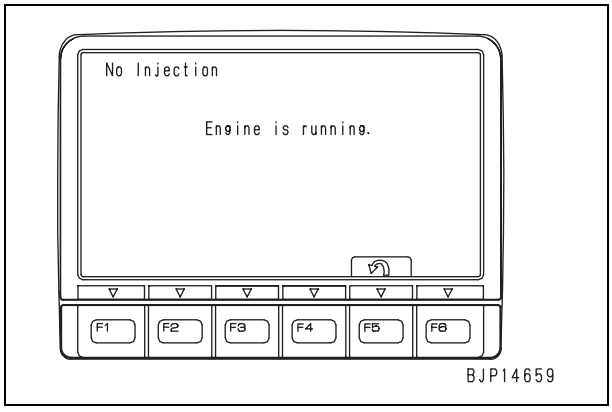

Display of Fuel Consumption

This function calculates the hourly fuel consumption from the actual fuel consumption in a measuring period and indicates it.

1. Selecting menu
   Select "11 Fuel Consumption" on the "Service Menu" screen.

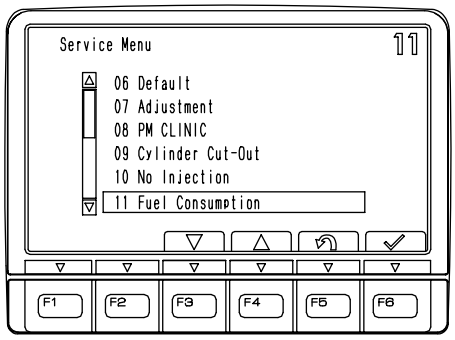

BJD14148

2. Starting measurement
   After the screen of "Fuel Consumption" is displayed, start measurement with the function switches.
   - [F1]: Start
   - [F2]: Clear
   - [F5]: Return to Service menu screen

   ★ When the screen of "Fuel Consumption" is displayed, if a data is indicated, it is the data of the previous measurement. This data is not an obstacle to new measurement and can be deleted by pressing [F2].

   ★ If [F1] is pressed, the data is displayed on the starting date and time side and measurement starts.

   ★ The display unit of the fuel changes according to the unit set with the initialization (unit setting) function.
   SI and meter: ℓ/h,
   inch: gal/h

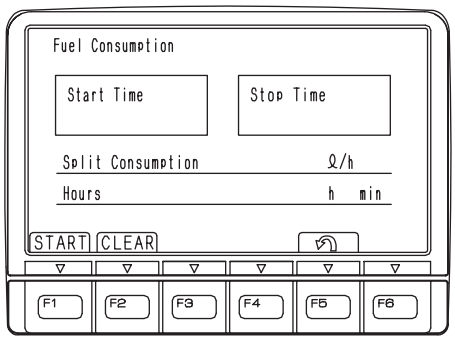

BJP14660

3. Display and function during measurement
   Clock mark (a) flashes during measurement.

   ★ While the fuel consumption is being measured, the operator can work with the operator mode and other functions. Measurement is not finished until this screen is displayed again and [F1] is pressed (Even if the starting switch is turned OFF, this function is kept effective, although fuel consumption is measured only while the engine is running).

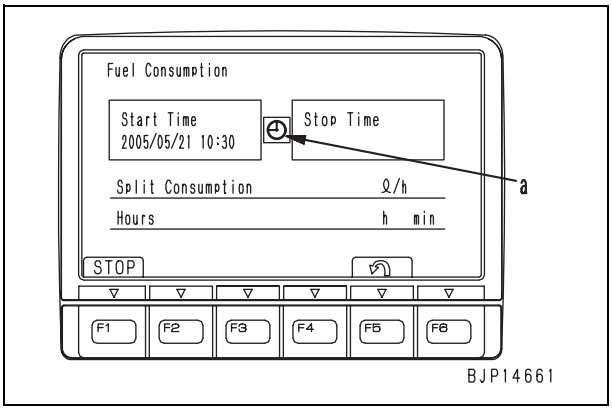

BJP14661

4. Finishing measurement
   Press [F1], and measurement is finished and the data are displayed on the finishing date and time side.

5. Displaying fuel consumption
   If the measurement is finished, the hourly fuel consumption calculated from the fuel consumption calculated by the engine controller and the elapsed time are displayed.

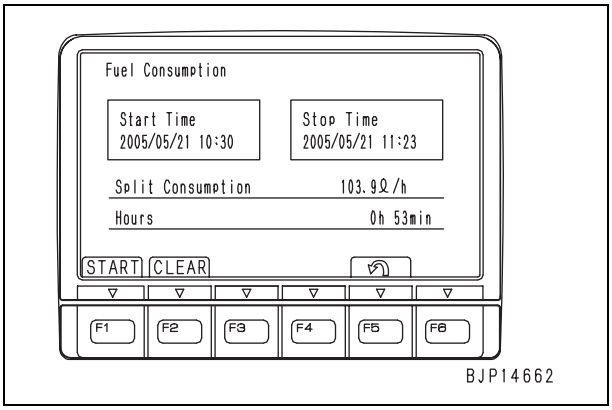

BJP14662

Display of KOMTRAX Settings (Terminal Status)

The setting condition and operating condition of KOMTRAX can be checked with "KOMTRAX Settings".
Terminal Status is used to check the setting condition of the KOMTRAX terminal.

1. Selecting menu
   Select "12 KOMTRAX Settings" on the "Service Menu" screen.

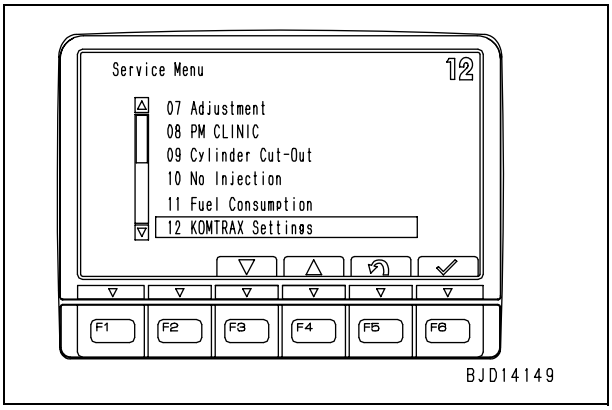

2. Selecting sub menu
   After the "KOMTRAX Settings" screen is displayed, select "01 Terminal Status" with the function switches or numeral input switches.
   ★ Select this item similarly to an item on the "Service Menu" screen.

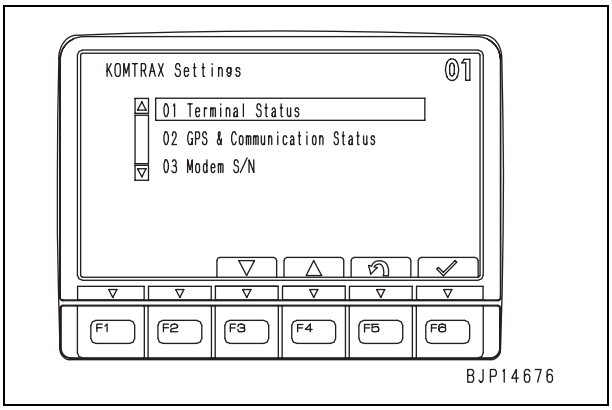

3. Contents of Terminal Status
   On the "Terminal Status" screen, the following items are displayed.
   - Terminal Type: Model name of KOMTRAX communication MODEM
   - KOMTRAX communication: Executing condition of KOMTRAX communication
   - GMT time: Greenwich Meant Time (+ 9 hours in Japan)
   - [F5]: Return to KOMTRAX Settings screen

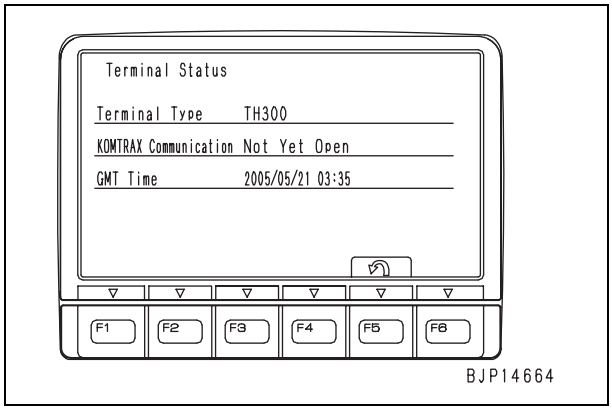

Display of KOMTRAX Settings (GPS & Communication Status)

The setting condition and operating condition of KOMTRAX can be checked with KOMTRAX Settings.
Condition of positioning and communication is used to check the condition of positioning and communication of the KOMTRAX terminal.

1. Selecting menu
   Select "12 KOMTRAX Settings" on the "Service Menu" screen.

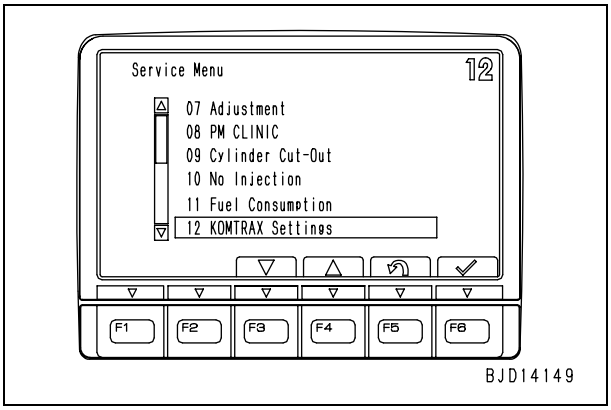

2. Selecting sub menu
   After the Display of "KOMTRAX Settings" screen is displayed, select "02 GPS & Communication Status" with the function switches or numeral input switches.
   ★ Select this item similarly to an item on the "Service Menu" screen.

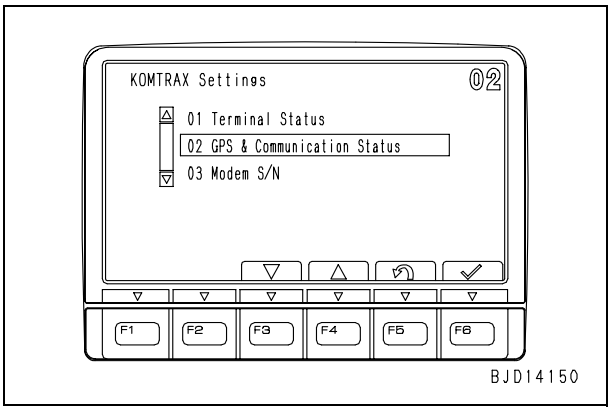

3. Contents of display of condition of positioning and communication
   On the screen of "GPS & Communication Status", the following items are displayed.
   - Positioning: Positioning condition of GPS
   - Communication: Communication environment of communication MODEM and connecting condition of communication MODEM
   - Number of message not yet sent: Number of mails in machine monitor not yet sent
   - [F5]: Return to KOMTRAX Settings screen

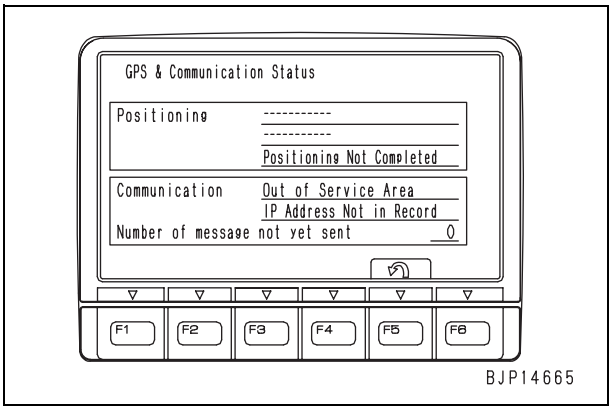

Display of KOMTRAX Settings

The setting condition and operating condition of KOMTRAX can be checked with KOMTRAX Settings.
MODEM S/N is used to check the serial No. of the KOMTRAX communication MODEM.

1. Selecting menu
   Select "12 KOMTRAX Settings" on the "Service Menu" screen.

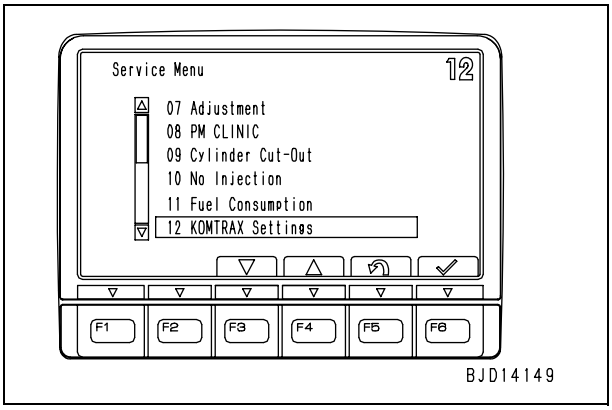

2. Selecting sub menu
   After the Display of "KOMTRAX Settings" screen is displayed, select "03 Modem S/N" with the function switches or numeral input switches.
   ★ Select this item similarly to an item on the "Service Menu" screen.

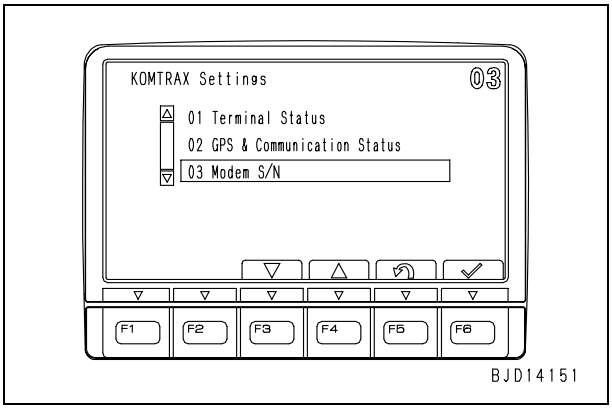

3. Contents of display of MODEM S/N
   The serial No. of KOMTRAX communication MODEM is displayed.
   - [F5]: Return to KOMTRAX Settings screen

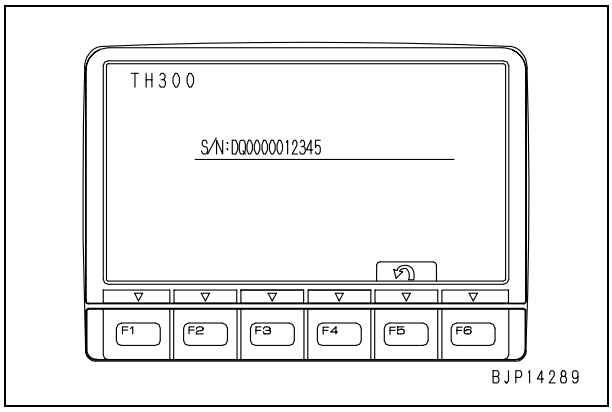

Display of Service Message

Special messages for the serviceman sent from the KOMTRAX base station (a distributor, etc.) can be checked with this function.
If there is setting in a message, a return mail can be sent by using numeral input switches.

1. Operation to display menu
   Select "13 Service Message" on the "Service Menu" screen.

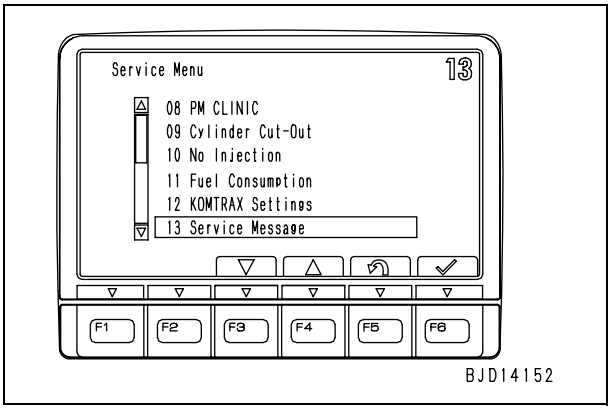

2. Display of message (Read-only)
   If there is a message, its contents are displayed. If there is not a message, "No message" is displayed.
   - [F5]: Return to service menu screen
   - ★ This message is different from a message transmitted to the operator in the operator mode.
   - ★ Since this message is special for the serviceman, the message monitor is not displayed when it is received as in the operator mode.

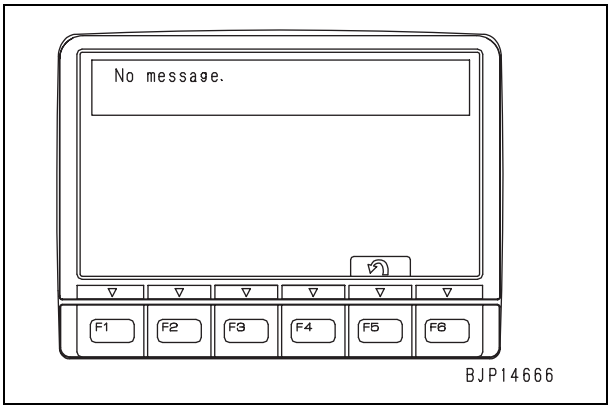

3. Display of message (with return mail function)
   If a box to enter a value with the numeral keys is displayed under the message, enter a proper number with the numeral input switches and function switches and confirm it, and the information is returned to the KOMTRAX base station.
   - [F5]: Return to service menu screen
   - [F6]: Confirm and return input value
   - ★ This message is different from a message transmitted to the operator in the operator mode.
   - ★ Since this message is special for the serviceman, the message monitor is not displayed when it is received as in the operator mode.

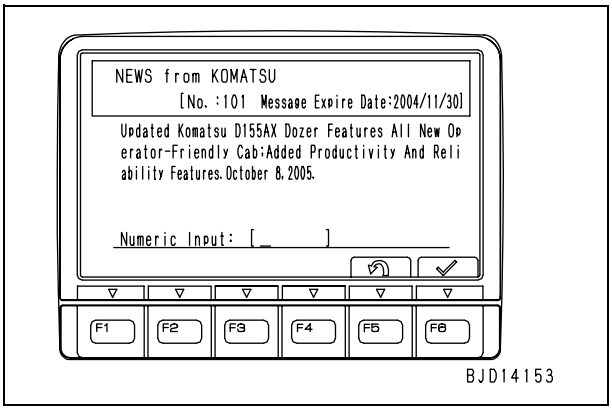

D155AX-6 Bulldozer

Form No. SEN00681-01

© 2006 KOMATSU
All Rights Reserved
Printed in Japan 05-06 (02)

BULLDOZER

D155AX-6

Machine model	Serial number
D155AX-6	80001 and up

30 Testing and adjusting

Testing and adjusting, Part 4

Testing and adjusting, Part 4 2
Handling of power supply circuit of engine controller 2
Preparation work for troubleshooting of electrical system 3
Pm Clinic 5

Testing and adjusting, Part 4

Handling of power supply circuit of engine controller

1. Before disconnecting or connecting a connector between the engine controller and engine, be sure to turn the starting switch OFF.

2. If a T-adapter is inserted in or connected to a connector between the engine controller and engine for troubleshooting, do not start the engine.
   ★ You may turn the starting switch to the OFF or ON position but must not turn it to the START position.

Preparation work for troubleshooting of electrical system

★ When carrying out troubleshooting of an electric circuit related to the machine monitor, engine controller, power train controller, or work equipment controller, expose the related connectors according to the following procedure.

1. Machine monitor

1) Remove the 4 mounting bolts each from covers (1) and (2) and remove those covers.
2) Remove the 4 mounting bolts each from covers (3) and (4) and remove those covers together with the foot rest.
★ The 2 bolts on the front window side of the foot rest are used as the cover mounting bolts, too.
3) Remove the 4 mounting bolts of machine monitor (5) and pull out machine monitor (5) and switch cover together toward the operator's seat.

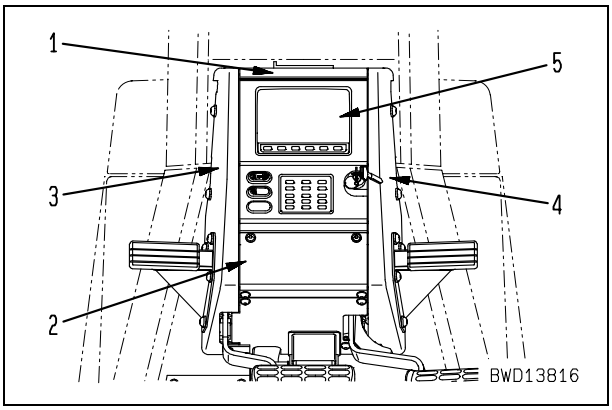

4) Insert or connect troubleshooting T-adapters in or to connectors **CM01**, **CM02**, and **CM03** of machine monitor (5).
★ **AT11** is for the GPS antenna.
★ If a camera is installed, **CM05** is also wired.

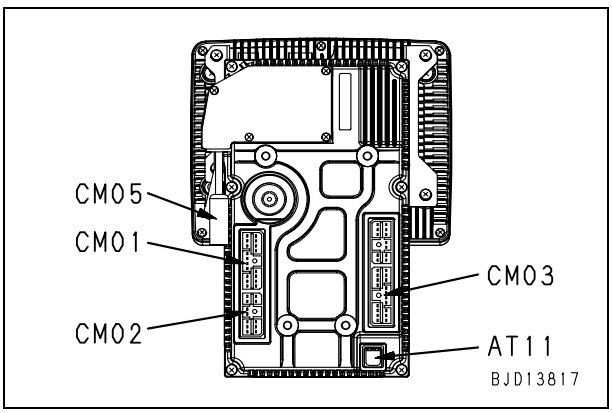

2. Engine controller

1) Open the left engine side cover and left mudguard.
2) Remove the mounting bolts and cover (6).

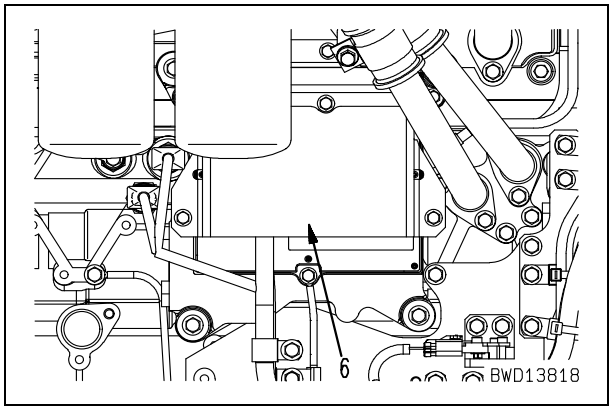

3) Insert or connect troubleshooting T-adapters in or to connectors **EGC1**, **EGC2**, and **EGC3** of engine controller (7).
★ Since connectors **EGC1** and **EGC2** are fixed with screws, loosen those screws before disconnecting.
★ When returning connectors **EGC1** and **EGC2**, tighten the screws to the specified torque.
Screw: **3 ± 1 Nm {0.3 ± 0.1 kgm}**

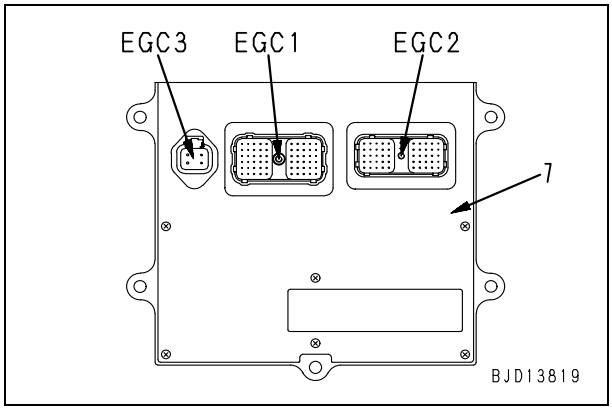

3. Power train controller

1) Remove the inside lower cover of the left console.
   ★ This cover is installed on the opposite side of the work equipment controller.
2) Insert or connect troubleshooting T-adapters in or to connectors **STC1**, **STC2**, and **STC3** of power train controller (8).
   ★ Since the connectors are fixed with screws, loosen those screws before disconnecting.
   ★ When returning the connectors, tighten the screws to the specified torque.
   Screw: **2.83 ± 0.28 Nm {0.288 ± 0.028 kgm}**

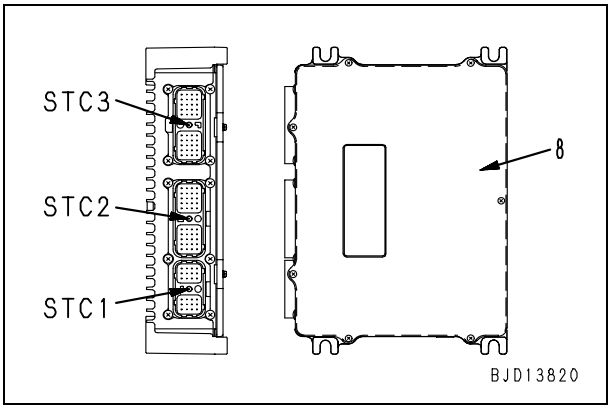

4. Work equipment controller

1) Remove the inside lower cover (9) of the left console.
   ★ This cover is installed on the opposite side of the work equipment controller.

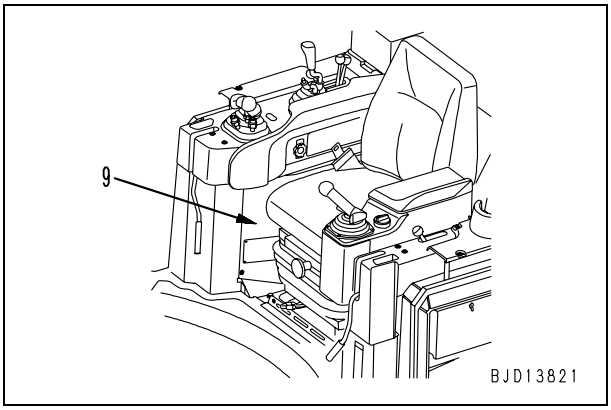

2) Insert or connect troubleshooting T-adapters in or to connectors **WEC1**, **WEC2**, and **WEC3** of work equipment controller (10).
   ★ Since the connectors are fixed with screws, loosen those screws before disconnecting.
   ★ When returning the connectors, tighten the screws to the specified torque.
   Screw: **2.83 ± 0.28 Nm {0.288 ± 0.028 kgm}**

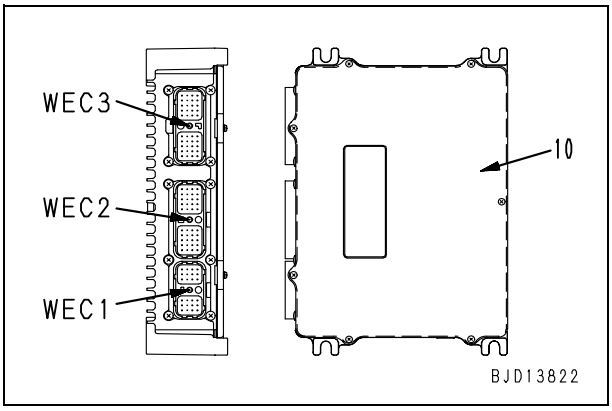

Pm Clinic

Machine model	Serial No.	Service meter
D155AX-6		h
User's name	Date of execution	Inspector
	/ /	

Specifications		
Blade	Rear attachment	Shoe width
☐ Σ blade ☐ Semi-U blade ☐ Full-U blade ☐	☐ Multi-shank ripper ☐ Variable giant ripper ☐ Counterweight (kg) ☐	☐ 560 mm ☐ ☐ 610 mm ☐ 660 mm ☐ 710 mm

Working condition			
Quarry/Mining	Construction	Type of soil (Specific gravity:)	Contents of work
☐ Coal ☐ Gold ☐ Limestone ☐	☐ Construction/Civil engineering ☐ Road ☐ Tunnel ☐	☐ Rock ☐ Gravel ☐ Sand ☐ Clay	☐ Dozing % ☐ Side cutting % ☐ Ripping % ☐ Travel %

Check of oil and coolant levels		
☐ Engine coolant level ☐ Engine oil level ☐ Hydraulic oil level	When necessary ☐ Damper case oil level ☐ Power train oil level	☐ Final drive oil level ☐

Engine coolant temperature	Power train oil temperature	Ambient temperature	Altitude
Max. range: Following figure (Left)	Max. range: Following figure (Right)	Max. °C/Min. °C	m

Operator's opinion	Result of visual inspection

Fault history of mechanical system				Fault history of electrical system			
AA10NX	times/1st time	h/last	h		times/1st time	h/last	h
AB00MA	times/1st time	h/last	h		times/1st time	h/last	h
B@BAZG	times/1st time	h/last	h		times/1st time	h/last	h
B@BCNS	times/1st time	h/last	h		times/1st time	h/last	h
B@BCZK	times/1st time	h/last	h		times/1st time	h/last	h
B@CENS	times/1st time	h/last	h		times/1st time	h/last	h
B@HANS	times/1st time	h/last	h		times/1st time	h/last	h
CA234	times/1st time	h/last	h		times/1st time	h/last	h

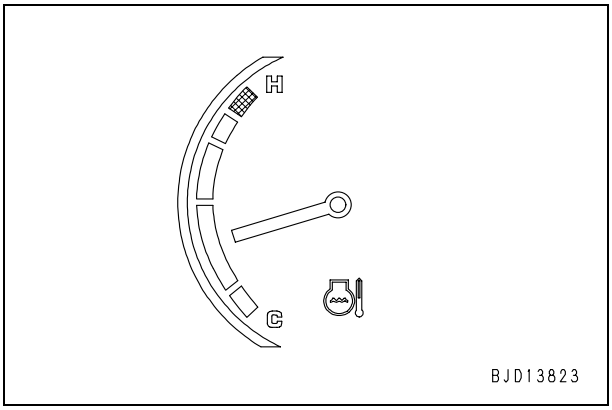

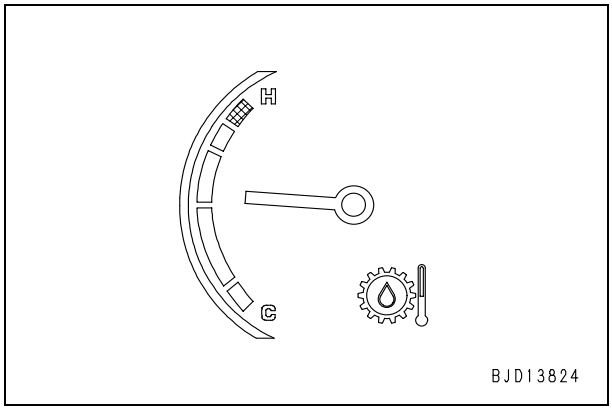

Check positions/Method 1

ENGINE

1 Engine speed

2 Boost pressure

5 Engine oil pressure

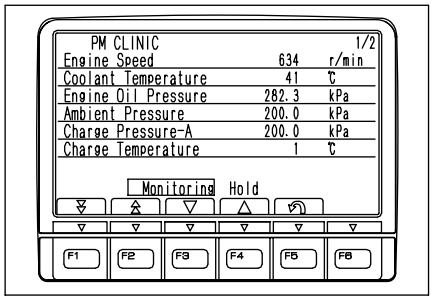

4 Blow-by pressure

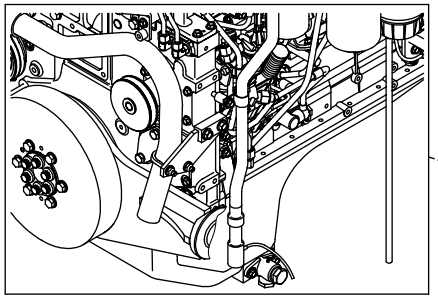

:Oil pressure
:Air (Gas)
:Electricity

Surface temperature sensor for measuring outside temperature

Engine

4 Adapter nozzle

3

Blow-by gauge

Thermometer

3 Exhaust gas temperature

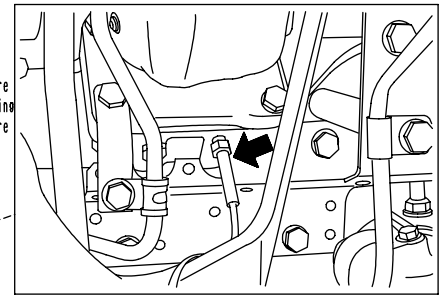

FAN

1 Fan speed

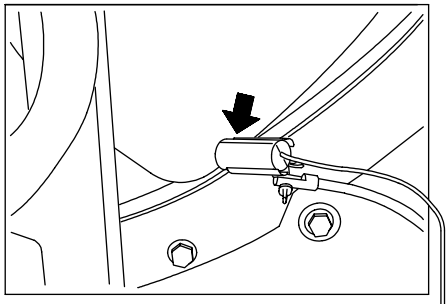

Tachometer

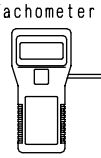

2 Fan circuit pressure

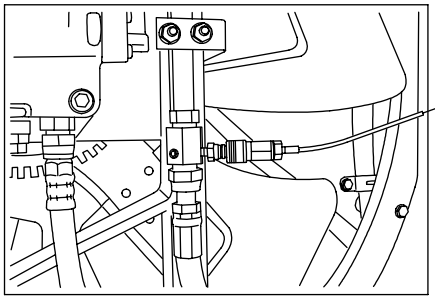

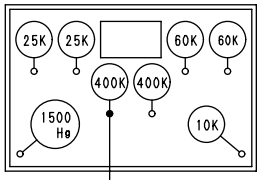

BJD14154

Check positions/Method 2

TORQUE CONVERTER

1 Inlet pressure
2 Outlet pressure
3 Lock-up clutch pressure (LU)
4 Stator clutch pressure (SC)

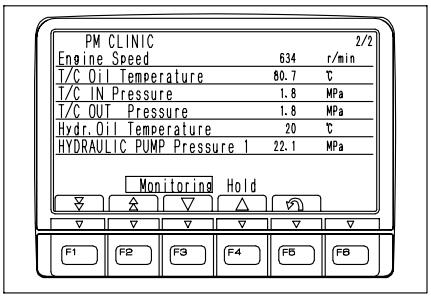

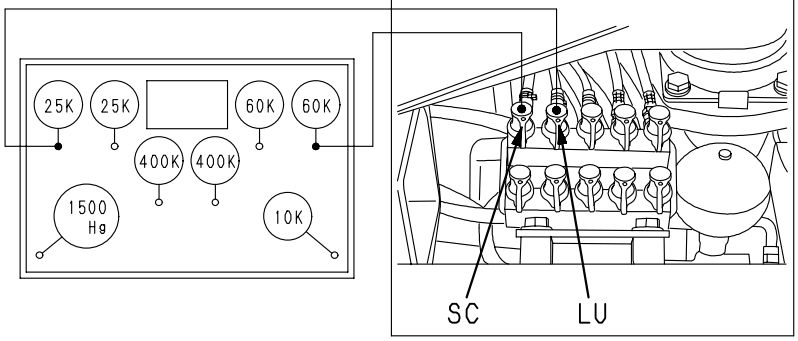

TRANSMISSION

1 Main relief pressure (TM)
2 F clutch pressure (F)
3 R clutch pressure (R)
4 1st clutch pressure (1ST)
5 2nd clutch pressure (2ND)
6 3rd clutch pressure (3RD)

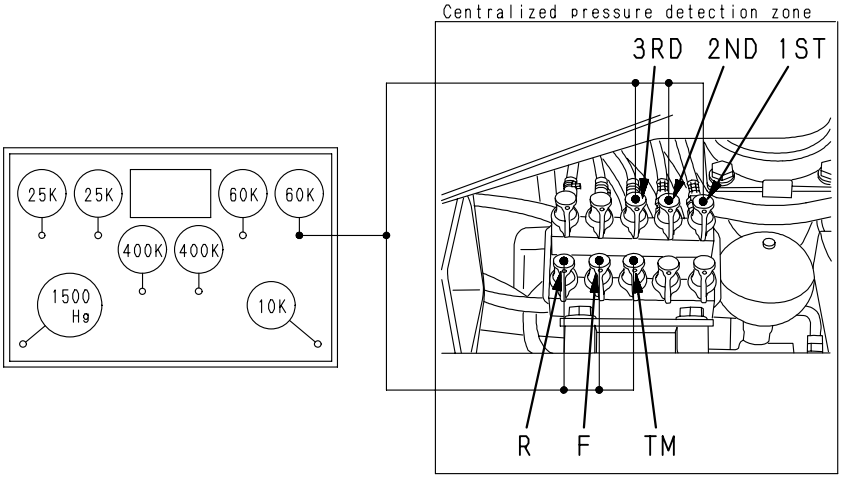

BRAKE

1 Right brake
2 Left brake

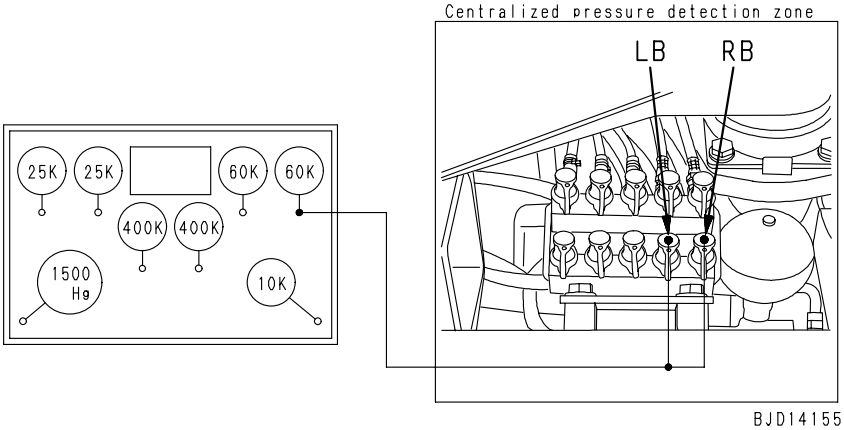

BJD14155

Check positions/Method 3

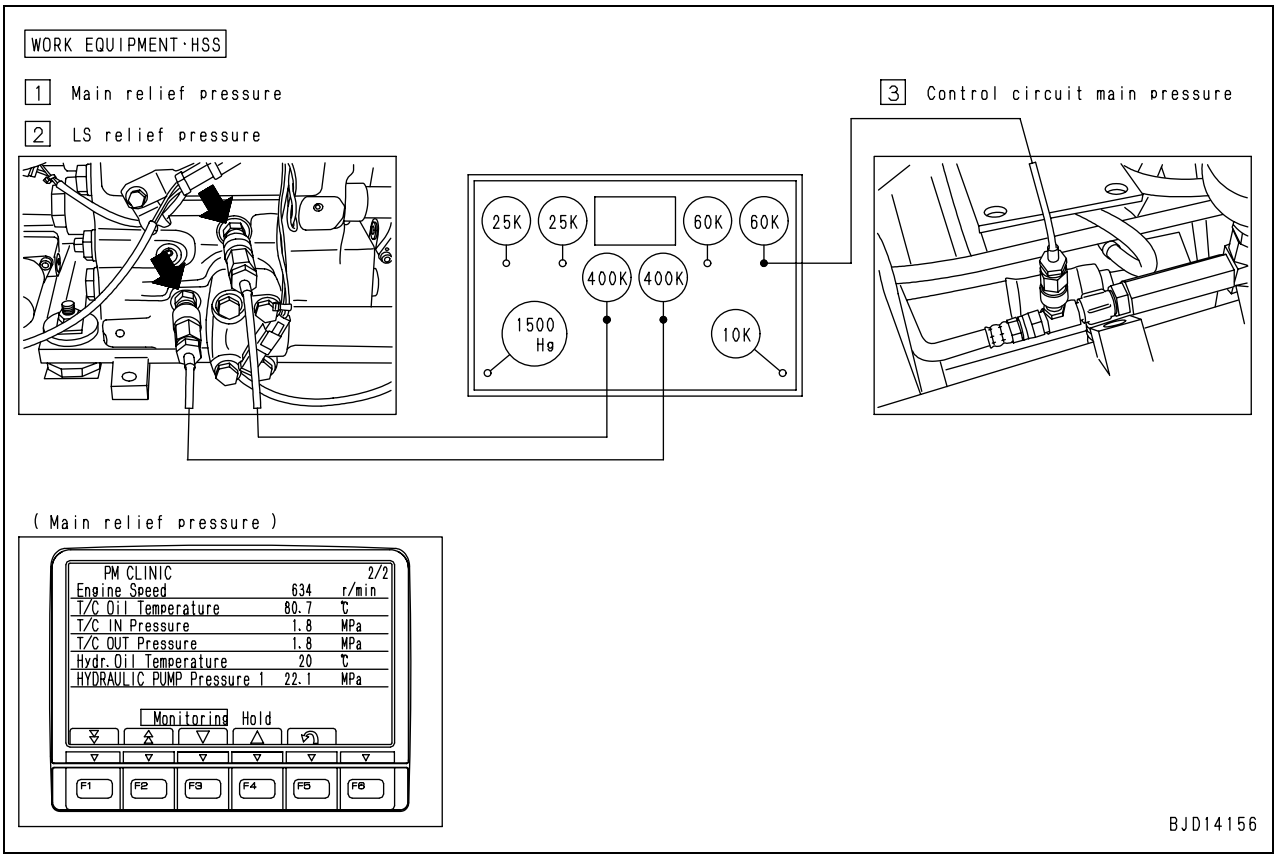

Pm Clinic check sheet

Machine model	Serial No.	Service meter	User's name	Date of execution	Inspector
D155AX-6					

1. Engine

Item		Measurement condition		Unit	Standard value for new machine	Service limit value	Measurement result	Accepted	Rejected
Engine	Engine speed	Low idling		rpm	715 – 765	715 – 765			
		High idle	Without deceleration (Adjustment: 0007)		2,000 – 2,100	2,000 – 2,100			
			Normal (Deceleration)		1,825 – 1,925	1,825 – 1,925			
			Decelerator pedal		825 – 925	825 – 925			
		F3 stall			1,560 – 1,660	1,450			
		F3 stall + Ripper raise relieve			1,500 – 1,600	1,395			
	Boost pressure	F3 stall		kPa {mmHg}	Min. 117 {Min. 880}	100 {750}			
	Exhaust temperature	Ambient temperature		°C	—	—		—	—
		F3 stall			660	700			
	Blow-by pressure	F3 stall		kPa {mmH$_2$O}	Max. 2.94 {Max. 300}	3.92 {400}			
	Engine oil pressure	High idle		MPa {kg/cm^2}	Min. 034 {Min. 3.5}	0.21 {2.1}			
		Low idle			Min. 010 {Min. 1.0}	0.08 {0.8}			

2. Cooling fan

Item		Measurement condition		Unit	Standard value for new machine	Service limit value	Measurement result	Accepted	Rejected
Fan	Speed	Adjustment: 1005	Low idle	rpm	—	—		—	—
			High idle		1,200 – 1,300	1,200 – 1,300			
	Circuit pressure		High idle	MPa {kg/cm^2}					

3. Power train oil pressure

⚠ Measure each transmission clutch pressure only while the engine is running at low speed for safety.

Item		Measurement condition		Unit	Standard value for new machine	Service limit value	Measurement result	Accepted	Rejected
Torque converter	Inlet pressure	Monitoring: 32601	Low idle	MPa {kg/cm²}	0.05 – 0.49 {0.5 – 5.0}	0.05 – 0.49 {0.5 – 5.0}			
			High idle		Max. 1.0 {Max. 10.0}	Max. 1.0 {Max. 10.0}			
	Outlet pressure	Monitoring: 32603	Low idle		0.05 – 0.29 {0.5 – 3.0}	0.05 – 0.29 {0.5 – 3.0}			
			High idle		0.29 – 0.69 {3.0 – 7.0}	0.29 – 0.69 {3.0 – 7.0}			
	Lockup clutch pressure	Automatic gear-shift mode Gear speed: F1 Travel with no load	Low idle		1.12 – 1.52 {11.5 – 15.5}	1.12 – 1.52 {11.5 – 15.5}			
			High idle		1.12 – 1.52 {11.5 – 15.5}	1.12 – 1.52 {11.5 – 15.5}			
	Stator clutch pressure	Gear speed: P/N	Low idle		2.45 – 2.85 {25.0 – 29.0}	2.45 – 2.85 {25.0 – 29.0}			
			High idle		2.45 – 2.85 {25.0 – 29.0}	2.45 – 2.85 {25.0 – 29.0}			

Item		Measurement condition		Unit	Standard value for new machine	Service limit value	Measurement result	Accepted	Rejected
Transmission	Main relief pressure	Gear speed: P/N	Low idle	MPa {kg/cm²}	2.81 – 3.11 {28.7 – 31.7}	Min. 2.62 {Min. 26.7}			
			High idle		3.04 – 3.33 {31.0 – 34.0}	Min. 2.84 {Min. 29.0}			
	F clutch pressure	Gear speed: F3 Brake: Applied	Low idle		2.45 – 2.75 {25.0 – 28.0}	Min. 2.26 {Min. 23.0}			
	R clutch pressure	Gear speed: R3 Brake: Applied	Low idle		2.65 – 2.94 {27.0 – 30.0}	Min. 2.45 {Min. 25.0}			
	1st clutch pressure	Gear speed: F1 Brake: Applied	Low idle		2.81 – 3.11 {28.7 – 31.7}	Min. 2.62 {Min. 26.7}			
	2nd clutch pressure	Gear speed: F2 Brake: Applied	Low idle		2.60 – 2.89 {26.5 – 29.5}	Min. 2.40 {Min. 24.5}			
	3rd clutch pressure	Gear speed: F3 Brake: Applied	Low idle		2.81 – 3.11 {28.7 – 31.7}	Min. 2.62 {Min. 26.7}			

Item		Measurement condition		Unit	Standard value for new machine	Service limit value	Measurement result	Accepted	Rejected
Brake	Right brake pressure	Gear speed: N Brake: Released	Low idle	MPa {kg/cm²}	2.46 – 3.04 {25.0 – 31.0}	2.16 {22.0}			
			High idle		2.46 – 3.04 {25.0 – 31.0}	2.16 {22.0}			
	Left brake pressure	Gear speed: N Brake: Released	Low idle		2.46 – 3.04 {25.0 – 31.0}	2.16 {22.0}			
			High idle		2.46 – 3.04 {25.0 – 31.0}	2.16 {22.0}			
	Brake performance	F2 stall, high idle			Machine must not move.				

4. Work equipment/HSS oil pressure

Item		Measurement condition		Unit	Standard value for new machine	Service limit value	Measurement result	Accepted	Rejected
Work equipment/HSS oil pressure	Unload pressure	Work equipment control lever: All levers in neutral	High idle	MPa {kg/cm²}	2.45 – 3.82 {25 – 39}	2.45 – 3.82 {25 – 39}			
	Work equipment relief pressure	Cylinder stroke end relief	High idle		26.0 – 29.0 {265 – 295}	26.0 – 29.0 {265 – 295}			
	Work equipment LS relief pressure		High idle		24.0 – 26.0 {245 – 265}	24.0 – 26.0 {245 – 265}			
	HSS relief pressure	Brake: Applied Steering: Relieved	High idle		38.2 – 41.5 {390 – 425}	38.2 – 41.5 {390 – 425}			
	HSS LS relief pressure		High idle		36.2 – 38.1 {369 – 389}	36.2 – 38.1 {369 – 389}			
	Control circuit basic pressure	Work equipment control lever: All levers in neutral	High idle		3.97 – 4.46 {40.5 – 45.5}	3.97 – 4.46 {40.5 – 45.5}			

5. Work equipment speed

Item		Measurement condition	Unit	Standard value for new machine	Service limit value	Measurement result	Accepted	Rejected
Work equipment speed	Blade raise	High idle	sec	3.0 – 4.0	3.0 – 4.0			
	Blade left tilt	High idle		1.8 – 2.8	3.1			
	Ripper lower	High idle		1.5 – 2.5	3.5			
	Ripper tilt in	High idle		4.5 – 5.5	6.2			

6. Hydraulic drift of work equipment

Item		Measurement condition	Unit	Standard value for new machine	Service limit value	Measurement result	Accepted	Rejected
Hydraulic drift	Hydraulic oil temperature	Engine: Stopped Blade lift: 15 minutes Ripper lift: 5 minutes	°C	—	—		—	—
	Hydraulic drift of blade lift		mm	Max. 50	200			
	Hydraulic drift of ripper lift		mm	Max. 50	70			

7. Final drive

Item		Measurement condition	Unit	Standard value for new machine	Service limit value	Measurement result	Accepted	Rejected
FD	Final drive	Engine: Stopped	—	There must not abnormally much metal dust.				

8. Repair record (Must be filled in)

Date	Service meter	Repair record	Date	Service meter	Repair record
/ /	h		/ /	h	
/ /	h		/ /	h	
/ /	h		/ /	h	
/ /	h		/ /	h	
/ /	h		/ /	h	

Pm Clinic undercarriage check sheet

Machine model	Serial No.	Service meter	User's name	Date of execution	Inspector
D155AX-6					

1. Bushing temperature

Item		Measurement condition		Measurement result	Accepted	Rejected
Under-carriage	Bushing temperature	Measure just after work.	Left side of machine			
			Right side of machine			

Left side of machine

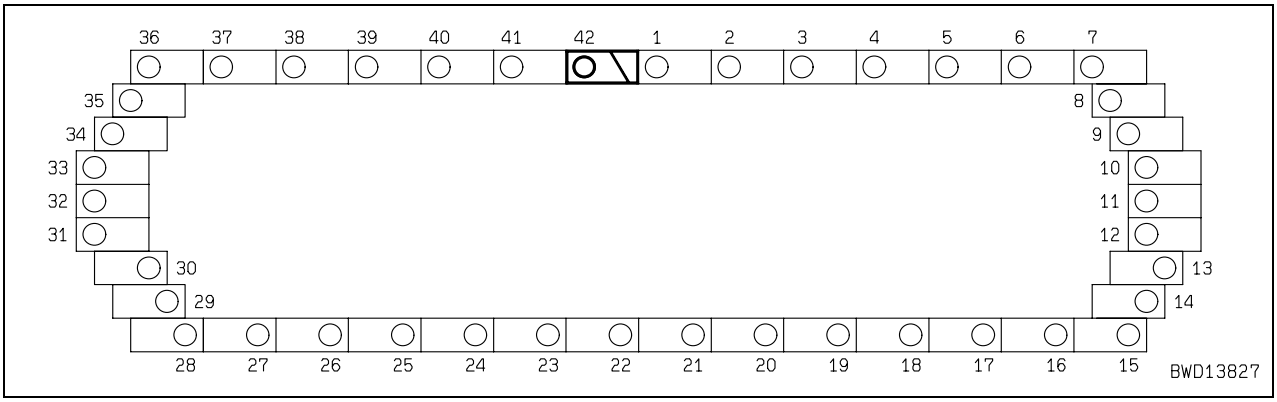

★ Symbols to be entered in check drawing
H : Hot (You cannot keep touching, Very hot, Min. 50 °C)
W : Warm (Lukewarm, warmer than link, Approx. 35 °C)
C : Normal temperature: Same as link temperature

Right side of machine

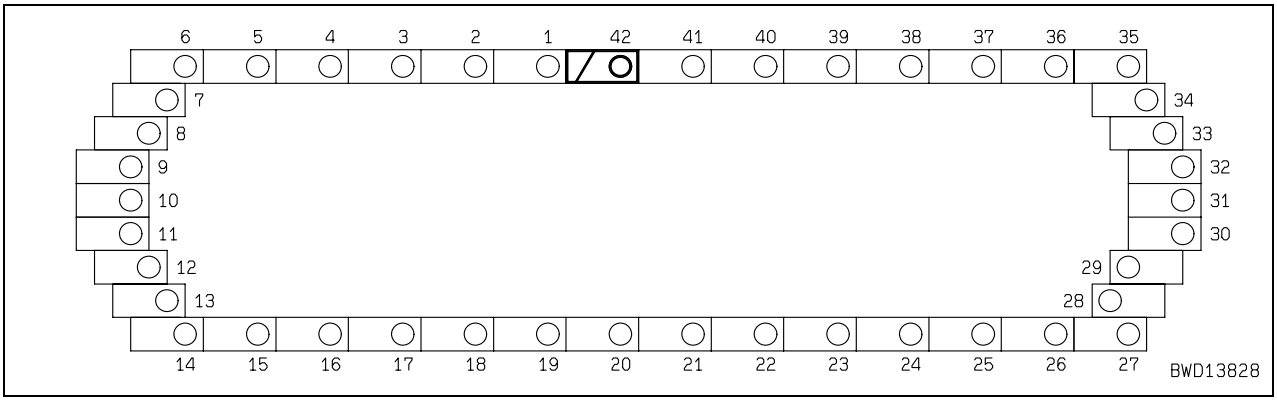

★ Symbols to be entered in check drawing
H : Hot (You cannot keep touching, Very hot, Min. 50 °C)
W : Warm (Lukewarm, warmer than link, Approx. 35 °C)
C : Normal temperature: Same as link temperature

Item		Measurement condition		Unit	Clearance limit	Pin No.	Measure-ment result	Accepted	Rejected
Undercarriage	Opening of track link	Measure dimension (a).	Left side of machine	mm	1.4 (Each side)				
			Right side of machine		1.4 (Each side)				

Opening of track link (a)

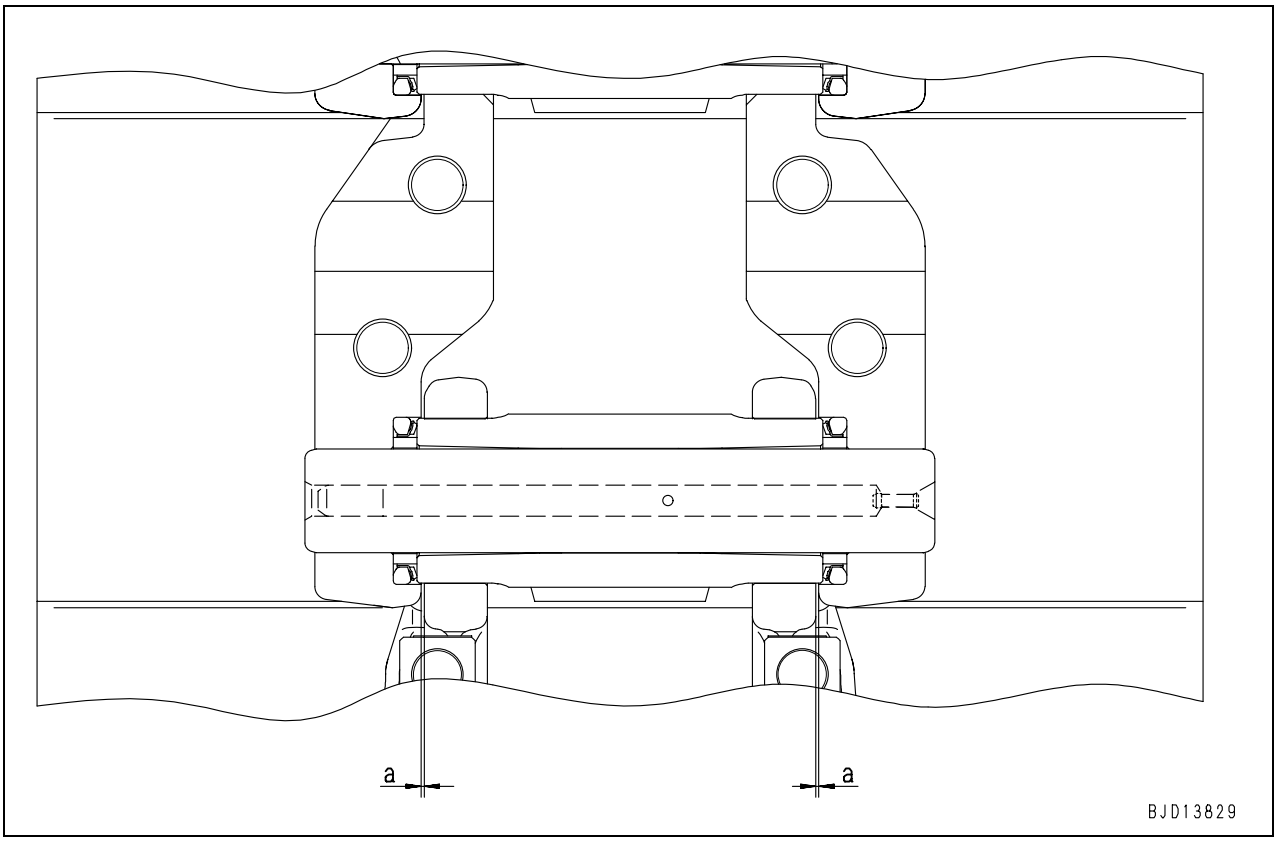

D155AX-6 Bulldozer

Form No. SEN00682-01

© 2006 KOMATSU
All Rights Reserved
Printed in Japan 05-06 (02)

BULLDOZER

D155AX-6

Machine model	Serial number
D155AX-6	80001 and up

40 Troubleshooting

General information on troubleshooting

General information on troubleshooting 2
Points to remember when troubleshooting 2
Sequence of events in troubleshooting 3
Check before troubleshooting 4
Classification and procedures for troubleshooting 5
Connector pin Nos. and connection table 8
T-boxes and T-adapters table 31

General information on troubleshooting

Points to remember when troubleshooting

- ⚠ **Stop the machine in a level ground, and check that the lock pin, blocks, and parking brake are securely fitted.**
- ⚠ **When carrying out the operation with two or more workers, keep strictly to the agreed signals, and do not allow any unauthorized person to come near.**
- ⚠ **If the radiator cap is removed when the engine is hot, hot coolant may spurt out and cause burns, so wait for the engine to cool down before starting troubleshooting.**
- ⚠ **Be extremely careful not to touch any hot parts or to get caught in any rotating parts.**
- ⚠ **When disconnecting wiring, always disconnect the negative (–) terminal of the battery first.**
- ⚠ **When removing the plug or cap from a location which is under pressure from oil, water, or air, always release the internal pressure first. When installing measuring equipment, be sure to connect it properly.**

The aim of troubleshooting is to pinpoint the basic cause of the failure, to carry out repairs swiftly, and to prevent reoccurrence of the failure.
When carrying out troubleshooting, and important point is of course to understand the structure and function. However, a short cut to effective troubleshooting is to ask the operator various questions to form some idea of possible causes of the failure that would produce the reported symptoms.

1. When carrying out troubleshooting, do not hurry to disassemble the components.
   If components are disassembled immediately any failure occurs:
   - Parts that have no connection with the failure or other unnecessary parts will be disassembled.
   - It will become impossible to find the cause of the failure.

   It will also cause a waste of manhours, parts, or oil or grease, and at the same time, will also lose the confidence of the user or operator.
   For this reason, when carrying out troubleshooting, it is necessary to carry out thorough prior investigation and to carry out troubleshooting in accordance with the fixed procedure.
2. Points to ask user or operator
   1) Have any other problems occurred apart from the problem that has been reported?
   2) Was there anything strange about the machine before the failure occurred?
   3) Did the failure occur suddenly, or were there problems with the machine condition before this?
   4) Under what conditions did the failure occur?
   5) Had any repairs been carried out before the failure?
      When were these repairs carried out?
   6) Has the same kind of failure occurred before?
3. Check before troubleshooting
   1) Check the oil level
   2) Check for any external leakage of oil from the piping or hydraulic equipment.
   3) Check the travel of the control levers.
   4) Check the stroke of the control valve spool.
   5) Other maintenance items can be checked externally, so check any item that is considered to be necessary.
4. Confirming failure
   - Confirm the extent of the failure yourself, and judge whether to handle it as a real failure or as a problem with the method of operation, etc.
     - ★ When operating the machine to reenact the troubleshooting symptoms, do not carry out any investigation or measurement that may make the problem worse.
5. Troubleshooting
   - Use the results of the investigation and inspection in Items 2 – 4 to narrow down the causes of failure, then use the troubleshooting flowchart to locate the position of the failure exactly.
     - ★ The basic procedure for troubleshooting is as follows.
       1) Start from the simple points.
       2) Start from the most likely points.
       3) Investigate other related parts or information.
6. Measures to remove root cause of failure
   - Even if the failure is repaired, if the root cause of the failure is not repaired, the same failure will occur again.
     To prevent this, always investigate why the problem occurred. Then, remove the root cause.

Sequence of events in troubleshooting

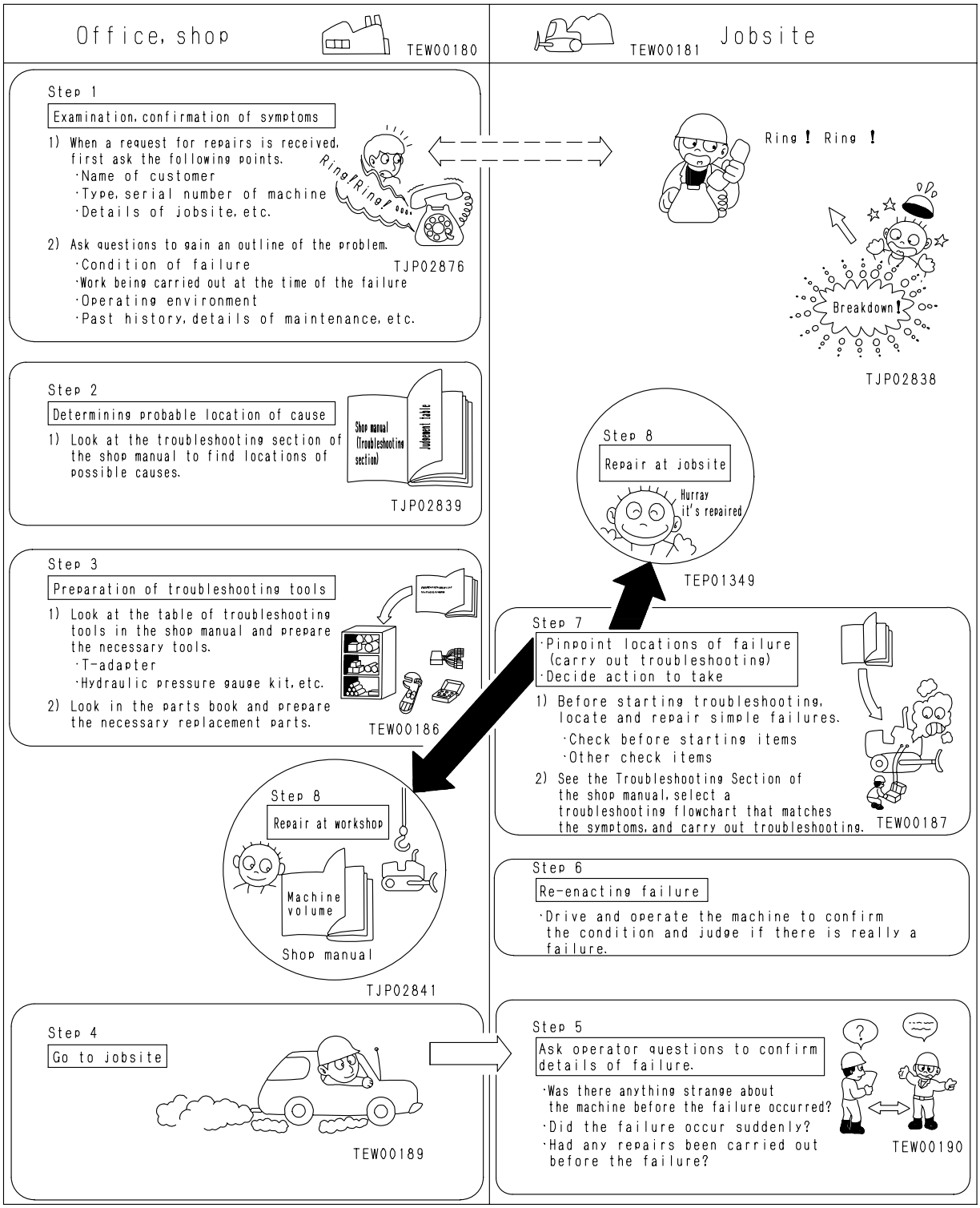

9JS04889

Check before troubleshooting

	Item	Criterion	Remedy
Lubricating oil/Coolant	1. Check of level and type of fuel	—	Add fuel
	2. Check of fuel for foreign matter	—	Clean and drain
	3. Check of hydraulic oil level	Between H – L	Add oil
	4. Check of damper case oil level	Between H – L	Add oil
	5. Check of power train oil level	Between H – L	Add oil
	6. Check of level and type of engine oil (in oil pan)	Between H – L	Add oil
	7. Check of coolant level (in sub tank)	Between FULL - LOW	Add coolant
	8. Check of dust indicator for clogging	Out of red range	Clean or replace
	9. Check of brake pedal stroke	—	Adjust
Hydraulic/ Mechanical equipment	1. Check for abnormal noise/smell	—	Repair
	2. Check for oil leakage	—	Repair
	3. Bleeding air	—	Bleed air
Electrical equipment	1. Check of battery terminals and wiring for looseness and corrosion	—	Retighten or replace
	2. Check of alternator terminals and wiring for looseness and corrosion	—	Retighten or replace
	3. Check of starting motor terminals and wiring for looseness and corrosion	—	Retighten or replace
	4. Check of battery voltage (with engine stopped)	20 – 30 V	Charge or replace
	5. Check of electrolyte level	Between H – L	Add or replace
	6. Check of wires for discoloration, burn, and removal of cover	—	Repair or replace
	7. Check for released wire clamp and drooping wire	—	Repair
	8. Check of wires for wetness (Check connectors and terminals for wetness, in particular)	—	Dry
	9. Check circuit breaker for turning OFF and fuse for disconnection and corrosion	—	Replace
	10. Check of alternator voltage (while engine speed is at middle or higher)	After operating for several minutes: 27.5 – 29.5 V	Replace
	11. Check of battery relay for operating sound (when starting switch is turned ON or OFF)	—	Replace

Classification and procedures for troubleshooting

Classification for troubleshooting

Type	Contents
Display of code	Troubleshooting by failure code
E mode	Troubleshooting for electrical system
H mode	Troubleshooting for hydraulic and mechanical system
S mode	Troubleshooting for engine

Procedure for troubleshooting

If a phenomenon looking like a trouble occurs in the machine, select a proper troubleshooting No. according to the following procedure, and then go to the corresponding troubleshooting section.

1. **Procedure for troubleshooting to be taken when action code and failure code are displayed on machine monitor:**
   If a action code and a failure code are displayed on the machine monitor, carry out the troubleshooting for the corresponding "**Display of code**" according to the displayed failure code.

2. **When electrical system failure code or mechanical system failure code is recorded in fault history:**
   If a action code and a failure code are not displayed on the machine monitor, check for a mechanical system failure code and an electrical system failure code with the fault history function of the machine monitor.
   If a failure code is recorded, carry out troubleshooting for the corresponding "**Display of code**" according to that code.
   - ★ If an electrical system failure code is recorded, delete all the codes and reproduce them, and then see if the trouble is still detected.
   - ★ A failure code of the mechanical system cannot be deleted.
   - ★ If a trouble is displayed in the air conditioner fault history or heater fault history by the fault history function, carry out the corresponding troubleshooting in "**E mode**".

3. **When action code or failure code is not displayed and no failure code is recorded in fault history:**
   If a action code or a failure code is not displayed on the machine monitor and no failure code is recorded in the fault history, a trouble that the machine cannot find out by itself may have occurred in the electrical system or hydraulic and mechanical system.
   In this case, check the phenomenon looking like a trouble again and select the same phenomenon from the table of "Phenomena looking like troubles and troubleshooting Nos.", and then carry out troubleshooting corresponding to that phenomenon in the "**E mode**", "**H mode**", or "**S mode**".

Phenomena looking like troubles and troubleshooting Nos.

No.	Phenomena looking like troubles	Troubleshooting			
		Display of code	**E mode**	**H mode**	**S mode**
Phenomena related to action code/failure code					
1	Action code and failure code are displayed on machine monitor	According to displayed code			
2	When fault history is checked, failure code is displayed in mechanical system fault history				
3	When fault history is checked, failure code is displayed in electrical system fault history				
4	When fault history is checked, failure code is displayed in air conditioner or heater fault history		E-20		
Phenomena related to engine					
5	Starting performance is poor				S-1
6	Engine does not start		E-3		S-2
7	Engine does not pick up smoothly				S-3
8	Engine stops during operation				S-4
9	Engine does not rotate smoothly				S-5
10	Engine lacks output (or lacks power)				S-6
11	Exhaust smoke is black (incomplete combustion)				S-7
12	Oil consumption is excessive (or exhaust smoke is blue)				S-8
13	Oil is contaminated badly				S-9
14	Fuel consumption is excessive				S-10
15	Oil is in coolant (or coolant spurts back or coolant level goes down)				S-11
16	Oil pressure drops				S-12
17	Oil level rises (Entry of coolant/fuel)				S-13
18	Coolant temperature becomes too high (overheating)				S-14
19	Abnormal noise is made				S-15
20	Vibration is excessive				S-16
21	Preheater does not operate		E-4		
Phenomena related to power train					
22	Power is low (Drawbar pull is low)			H-1	
23	Machine does not travel (at 2nd or 3rd gear speed)			H-2	
24	Machine does not start at any gear speed			H-3	
25	Machine can travel only forward or in reverse			H-4	
26	When gear speed or travel direction is changed, time lag is large			H-5	
27	Machine cannot be steered (Machine does not turn right or left)			H-6	
28	Steering speed or steering force is low			H-7	
29	Brake does not work			H-8	
30	Power train oil is overheated			H-9	
31	Abnormal sound comes out from around HSS pump or HSS motor			H-10	
Phenomena related to work equipment					
32	Speed of all work equipment is low			H-11	
33	No work equipment moves			H-12	
34	Blade lift speed or power is low			H-13	
35	Blade tilt speed or power is low			H-14	

No.	Phenomena looking like troubles	Troubleshooting			
		Display of code	**E mode**	**H mode**	**S mode**
36	Ripper lift speed or power is low			H-15	
37	Ripper tilt speed or power is low			H-16	
38	Hydraulic drift of blade lift is large			H-17	
39	Hydraulic drift of blade tilt is large			H-18	
40	Hydraulic drift of ripper lift is large			H-19	
41	Ripper pin puller cylinder does not operate			H-20	
42	Blade does not pitch			H-21	
43	Abnormal sound comes out from around work equipment pump			H-22	
Phenomena related to machine monitor					
44	When starting switch turned ON, machine monitor displays nothing		E-1		
45	When starting switch turned ON (before starting engine), basic check item (radiator coolant level) lights up		E-2		
46	Precaution item lights up while engine is running		E-5		
47	Emergency stop item lights up while engine is running		E-6		
48	Engine coolant temperature gauge does not indicate normally		E-7		
49	Fuel level gauge does not indicate normally		E-8		
50	Power train oil temperature gauge (multi-gauge) does not indicate normally		E-9		
51	Hydraulic temperature gauge (multi-gauge) does not indicate normally		E-10		
52	Contents of display by machine monitor are different from applicable machine		E-11		
53	Machine monitor does not display some items		E-12		
54	Function switch does not work		E-13		
55	Operation mode does not change		E-14		
56	Gearshift mode does not change		E-15		
57	Customize function does not operate normally		E-16		
58	Customize memory function does not normally		E-17		
59	Float mode does not change		E-18		
60	Alarm buzzer cannot be stopped		E-19		
61	Air conditioner does not operate normally		E-20		
62	When starting switch is turned OFF, service meter is not displayed		E-21		
63	Machine monitor cannot be set in service mode		E-22		
64	Ripper pin puller cylinder does not operate		E-23		
65	Backup alarm does not sound or does not stop		E-24		
66	Headlamp, rear lamp, and ripper point lamp do not light up		E-25		
67	Windshield wiper and window washer do not operate		E-26		
Other phenomena					
68	KOMTRAX system does not operate normally		E-27		

Connector pin Nos. and connection table

★ The male and female mean the pin and jack respectively. The plug and receptacle mean the shapes of the housing.

Total number of pins	X type connector		
	Male (Housing: Receptacle)	Female (Housing: Plug)	Part No. of T-adapter
1	Part No.: 08055-00181	Part No.: 08055-00191	799-601-7010
2	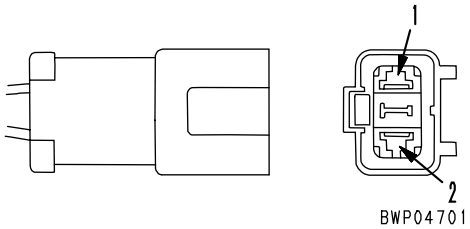	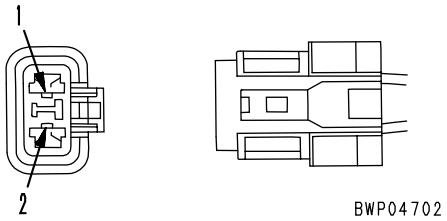	799-601-7020
	Part No.: 08055-00282	Part No.: 08055-00292	
3	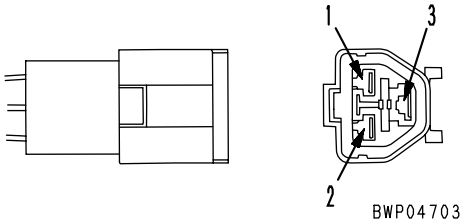	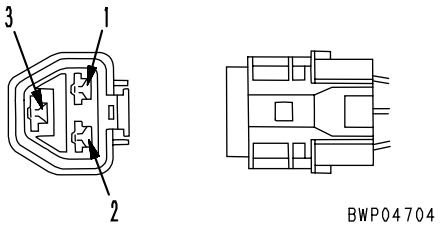	799-601-7030
	Part No.: 08055-00381	Part No.: 08055-00391	
4	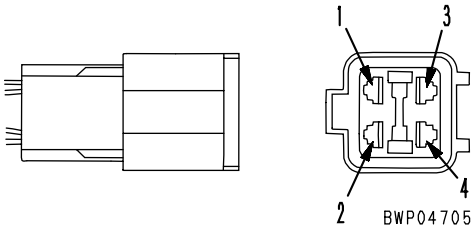	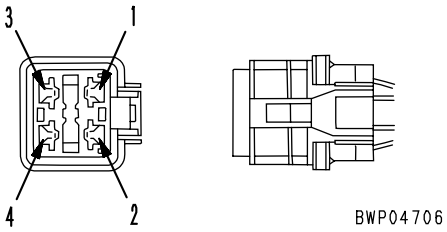	799-601-7040
	Part No.: 08055-00481	Part No.: 08055-00491	
—	Part No. of terminal: 79A-222-3370 • Wire size: 0.85 • Grommet: Black • Quantity: 20 pieces	Part No. of terminal: 79A-222-3390 • Wire size: 0.85 • Grommet: Black • Quantity: 20 pieces	—
—	Part No. of terminal: 79A-222-3380 • Wire size: 2.0 • Grommet: Red • Quantity: 20 pieces	Part No. of terminal: 79A-222-3410 • Wire size: 2.0 • Grommet: Red • Quantity: 20 pieces	—

Total number of pins	SWP type connector		
	Male (Housing: Receptacle)	Female (Housing: Plug)	Part No. of T-adapter
6	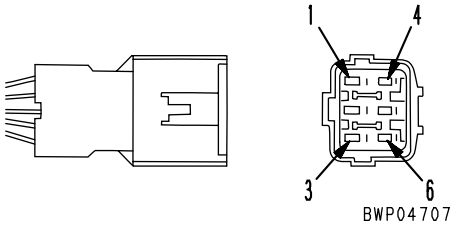	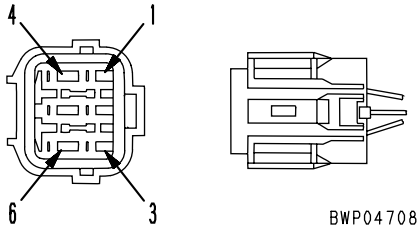	799-601-7050
	Part No.: 08055-10681	Part No.: 08055-10691	
8	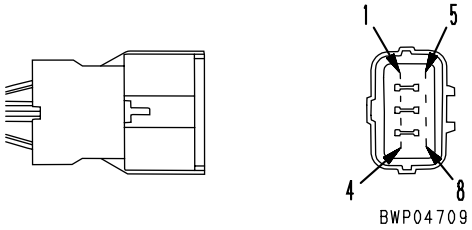	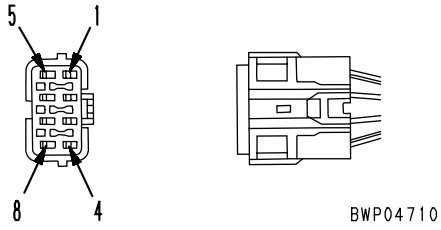	799-601-7060
	Part No.: 08055-10881	Part No.: 08055-10891	
12	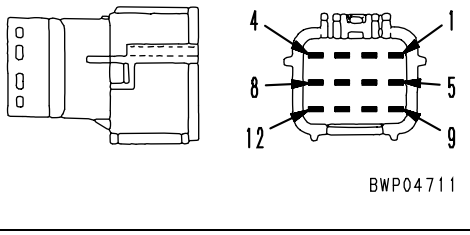	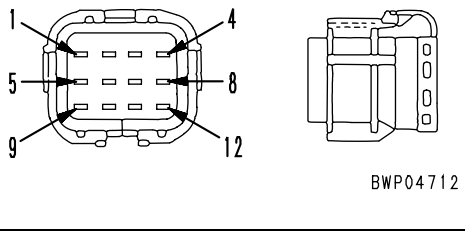	799-601-7310
	Part No.: 08055-11281	Part No.: 08055-11291	
14	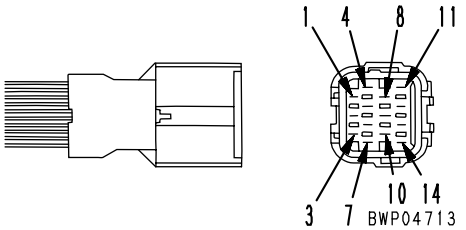	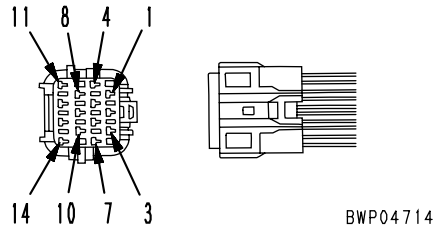	799-601-7070
	Part No.: 08055-11481	Part No.: 08055-11491	

Total number of pins	SWP type connector		
	Male (Housing: Receptacle)	Female (Housing: Plug)	Part No. of T-adapter
16	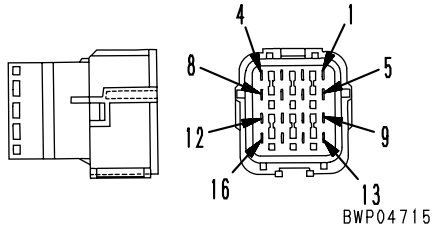	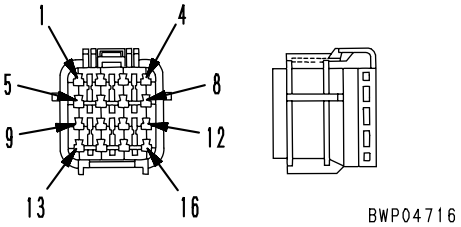	799-601-7320
	Part No.: 08055-11681	Part No.: 08055-11691	
—	Part No. of terminal: • Wire size: 0.85 • Grommet: Black • Quantity: 20 pieces	Part No. of terminal: • Wire size: 0.85 • Grommet: Black • Quantity: 20 pieces	—
—	Part No. of terminal: • Wire size: 1.25 • Grommet: Red • Quantity: 20 pieces	Part No. of terminal: • Wire size: 1.25 • Grommet: Red • Quantity: 20 pieces	—

Total number of pins	M type connector		
	Male (Housing: Receptacle)	Female (Housing: Plug)	Part No. of T-adapter
1	Part No.: 08056-00171	Part No.: 08056-00181	799-601-7080
2	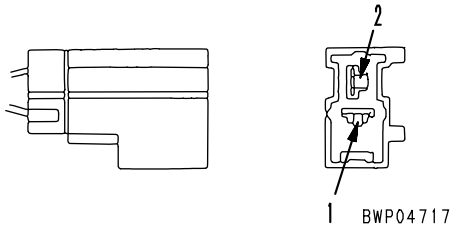 BWP04717	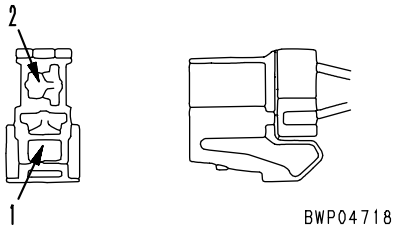 BWP04718	799-601-7090
	Part No.: 08056-00271	Part No.: 08056-00281	
3	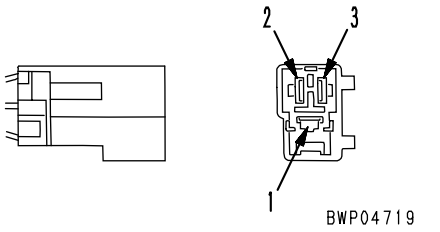 BWP04719	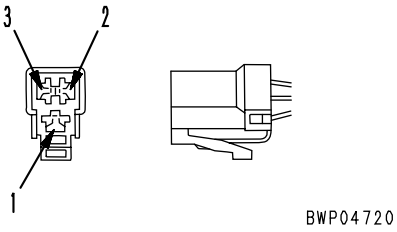 BWP04720	799-601-7110
	Part No.: 08056-00371	Part No.: 08056-00381	
4	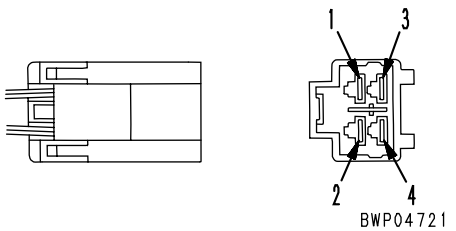 BWP04721	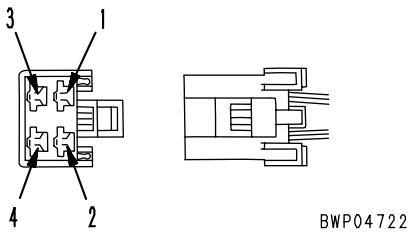 BWP04722	799-601-7120
	Part No.: 08056-00471	Part No.: 08056-00481	
6	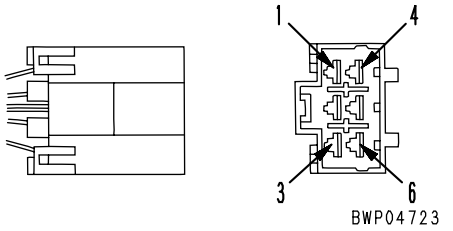 BWP04723	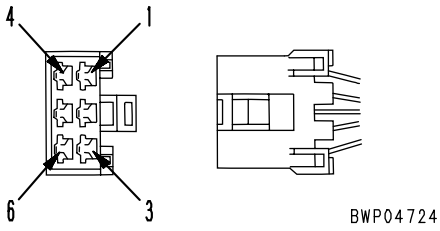 BWP04724	799-601-7130
	Part No.: 08056-00671	Part No.: 08056-00681	
8	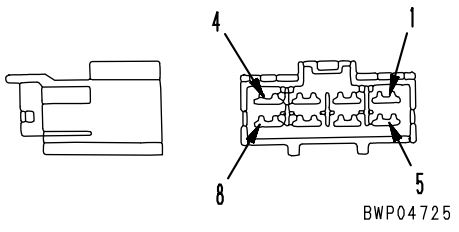 BWP04725	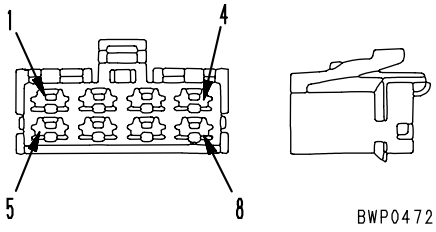 BWP04726	799-601-7340
	Part No.: 08056-00871	Part No.: 08056-00881	

Total number of pins	S type connector		
	Male (Housing: Receptacle)	Female (Housing: Plug)	Part No. of T-adapter
8	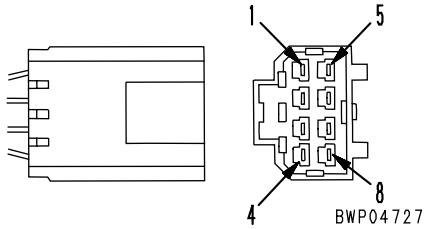	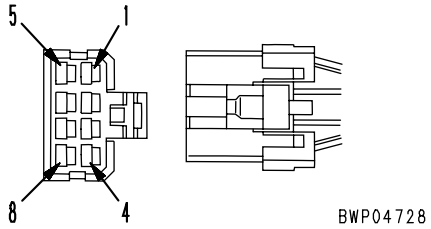	799-601-7140
	Part No.: 08056-10871	Part No.: 08056-10881	
10 (White)	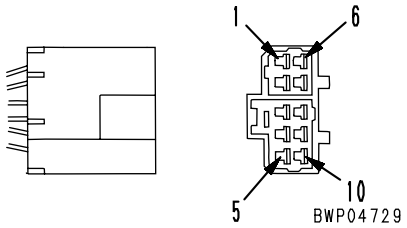	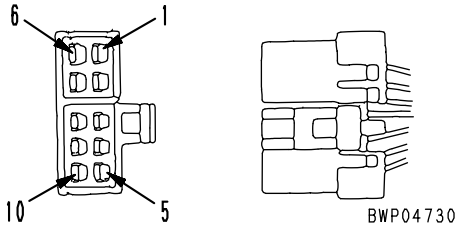	799-601-7150
	Part No.: 08056-11071	Part No.: 08056-11081	
12 (White)	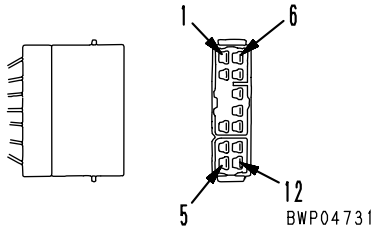	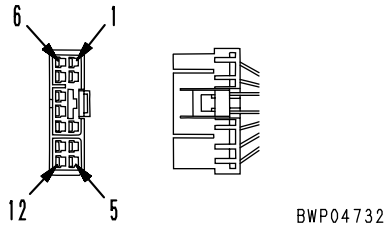	799-601-7350
	Part No.: 08056-11271	Part No.: 08056-11281	
16 (White)	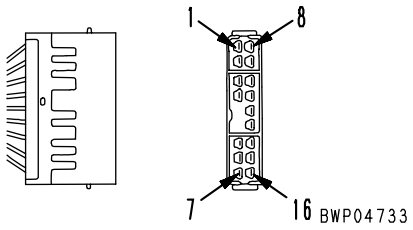	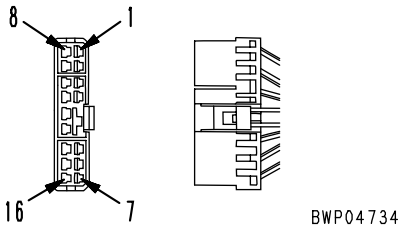	799-601-7330
	Part No.: 08056-11671	Part No.: 08056-11681	

Total number of pins	S type connector		
	Male (Housing: Receptacle)	Female (Housing: Plug)	Part No. of T-adapter
10 (Blue)	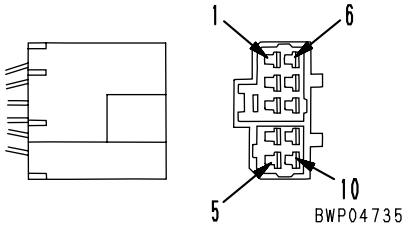	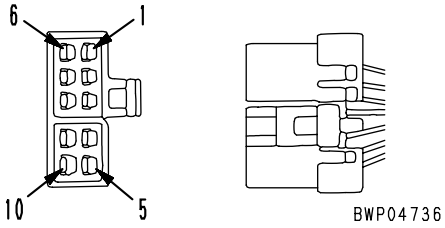	—
	—	—	
12 (Blue)	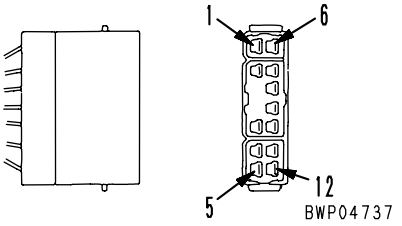	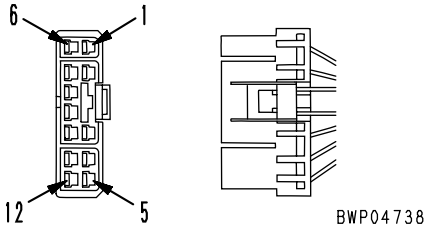	799-601-7160
	Part No.: 08056-11272	Part No.: 08056-11282	
16 (Blue)	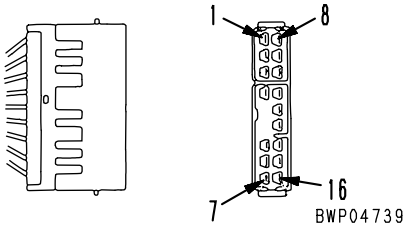	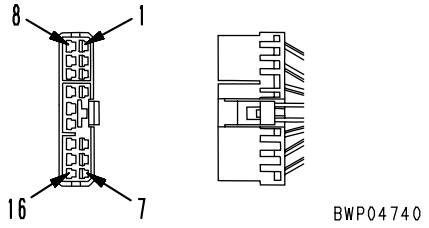	799-601-7170
	Part No.: 08056-11672	Part No.: 08056-11682	

Total number of pins	MIC type connector		
	Male (Housing: Receptacle)	Female (Housing: Plug)	Part No. of T-adapter
7	Part No. of body: 79A-222-2640 (Quantity: 5 pieces)	Part No. of body: 79A-222-2630 (Quantity: 5 pieces)	—
11	Part No. of body: 79A-222-2680 (Quantity: 5 pieces)	Part No. of body: 79A-222-2670 (Quantity: 5 pieces)	—
5	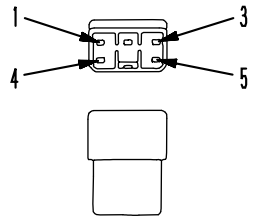 BWP04741	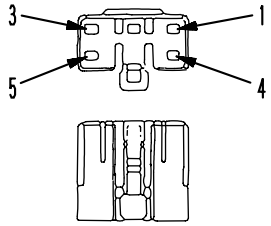 BWP04742	799-601-2710
	Part No. of body: 79A-222-2620 (Quantity: 5 pieces)	Part No. of body: 79A-222-2610 (Quantity: 5 pieces)	
9	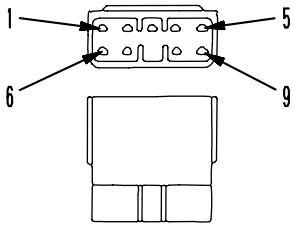 BWP04743	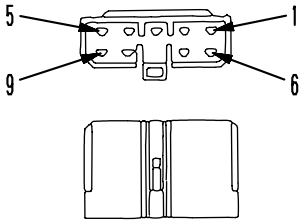 BWP04744	799-601-2950
	Part No. of body:79A-222-2660 (Quantity: 5 pieces)	Part No. of body:79A-222-2650 (Quantity: 5 pieces)	
13	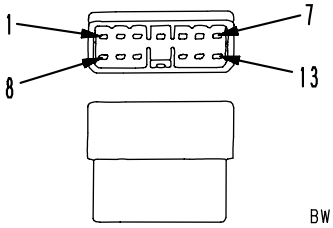 BWP04745	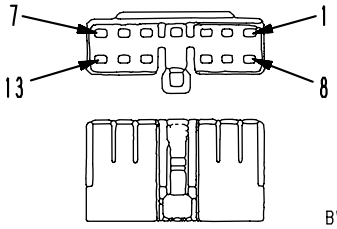 BWP04746	799-601-2720
	Part No. of body: 79A-222-2710 (Quantity: 2 pieces)	Part No. of body: 79A-222-2690 (Quantity: 2 pieces)	

Total number of pins	MIC type connector		
	Male (Housing: Receptacle)	Female (Housing: Plug)	Part No. of T-adapter
17	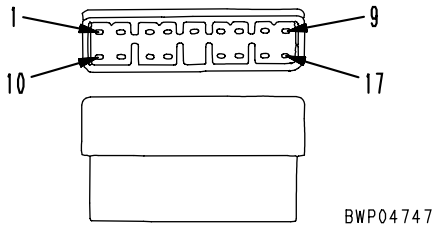	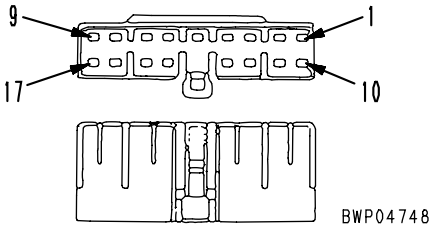	799-601-2730
	Part No. of body: 79A-222-2730 (Quantity: 2 pieces)	Part No. of body: 79A-222-2720 (Quantity: 2 pieces)	
21	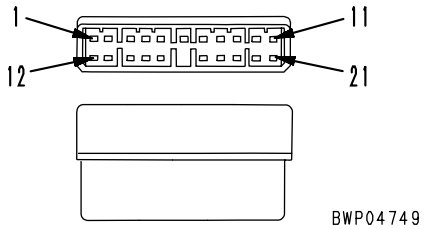	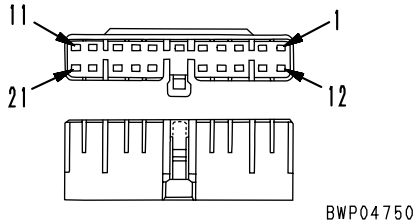	799-601-2740
	Part No. of body: 79A-222-2750 (Quantity: 2 pieces)	Part No. of body: 79A-222-2740 (Quantity: 2 pieces)	
	Part No. of body: 79A-222-2770 (Quantity: 50 pieces)	Part No. of body: 79A-222-2760 (Quantity: 50 pieces)	—

Total number of pins	AMP040 type connector		
	Male (Housing: Receptacle)	Female (Housing: Plug)	Part No. of T-adapter
8	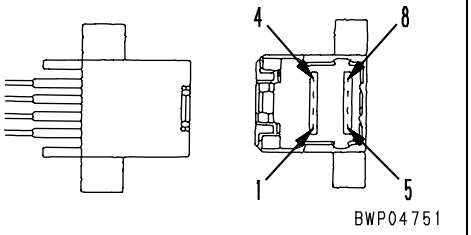	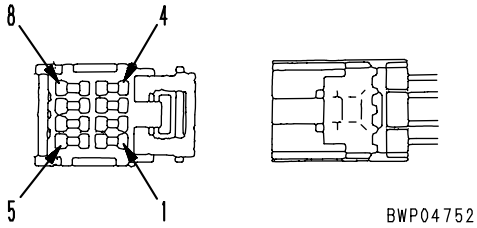	799-601-7180
	—	Part No. of housing: 79A-222-3430 (Quantity: 5 pieces)	
12	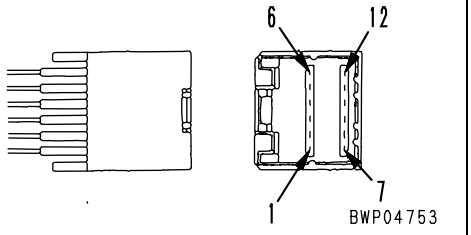	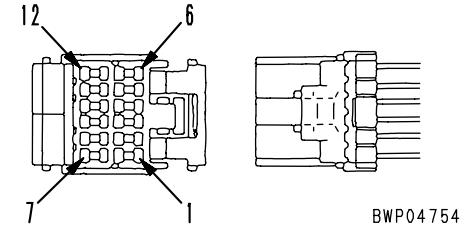	799-601-7190
	—	Part No. of housing: 79A-222-3440 (Quantity: 5 pieces)	
16	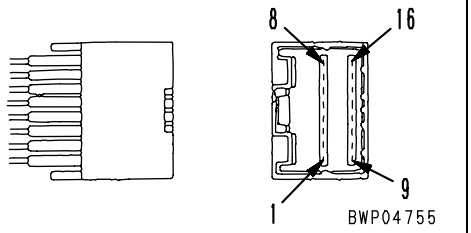	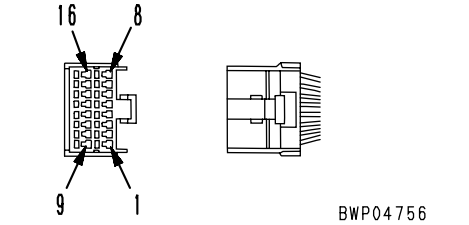	799-601-7210
	—	Part No. of housing: 79A-222-3450 (Quantity: 5 pieces)	
20	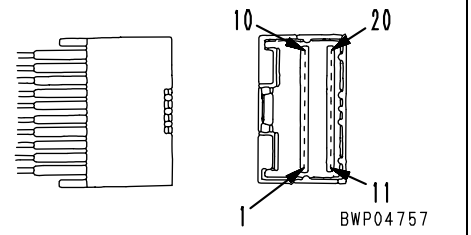	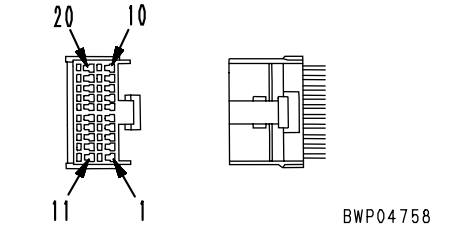	799-601-7220
	—	Part No. of housing: 79A-222-3460 (Quantity: 5 pieces)	

★ Part No. of terminal: 79A-222-3470 (Not related to number of poles)

Total number of pins	AMP070 type connector		
	Male (Housing: Receptacle)	Female (Housing: Plug)	Part No. of T-adapter
10	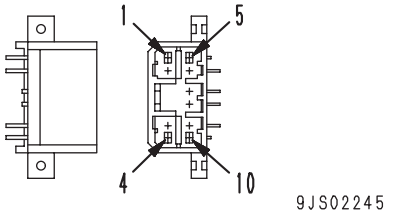	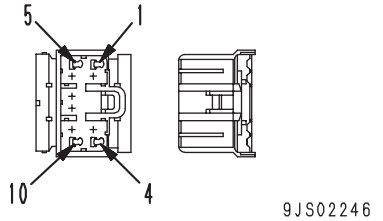	799-601-7510
	—	Part No.: 7821-92-7330	
12	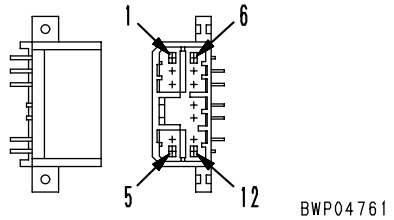	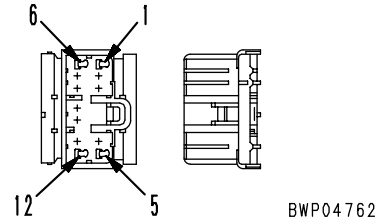	799-601-7520
	—	Part No.: 7821-92-7340	
14	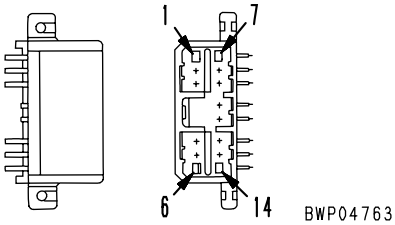	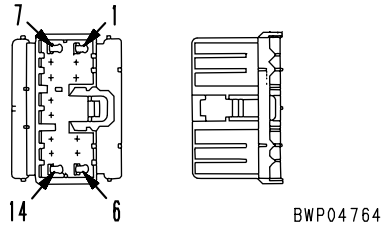	799-601-7530
	—	Part No.: 7821-92-7350	
18	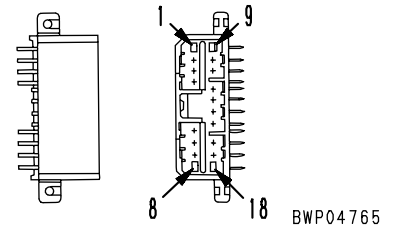	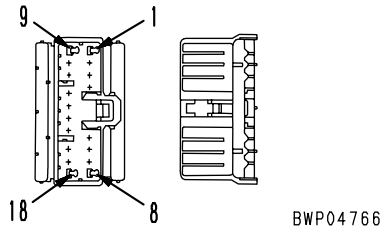	799-601-7540
	—	Part No.: 7821-92-7360	
20	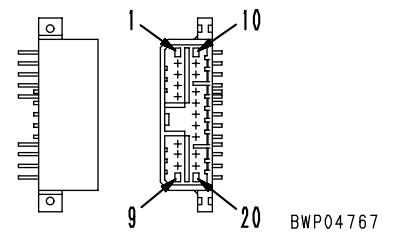	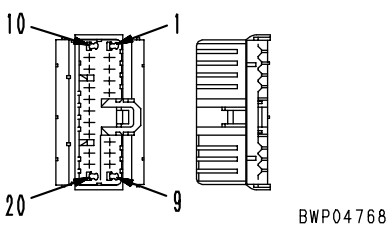	799-601-7550
	—	Part No.: 7821-92-7370	

Total number of pins	L type connector		
	Male (Housing: Receptacle)	Female (Housing: Plug)	Part No. of T-adapter
2	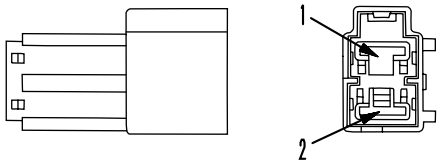 BWP04769	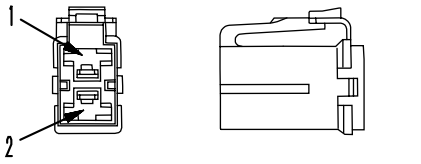 BWP04770	—
	—	—	

Total number of pins	PA type connector		
	Male (Housing: Receptacle)	Female (Housing: Plug)	Part No. of T-adapter
9	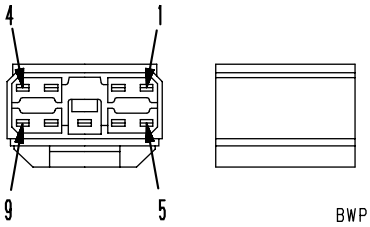 BWP04771	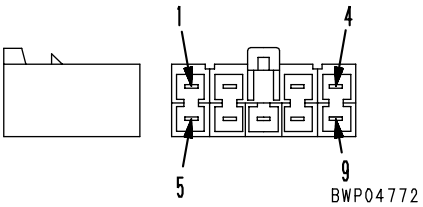 BWP04772	—
	—	—	

Total number of pins	BENDIX (MS) type connector		
	Male (Housing: Receptacle)	Female (Housing: Plug)	Part No. of T-adapter
10	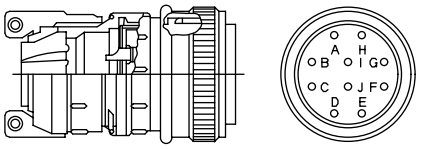 BWP04773	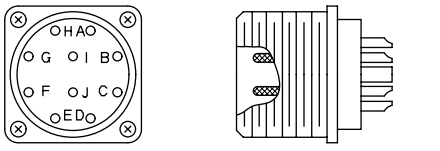 BWP04774	799-601-3460
	—	—	

Total number of pins	KES 1 (For automobile) type connector		
	Male (Housing: Receptacle)	Female (Housing: Plug)	Part No. of T-adapter.
2	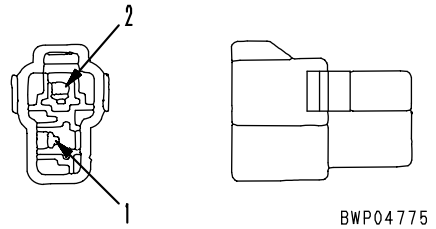	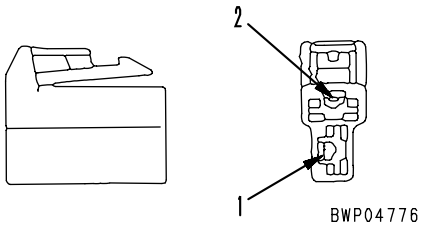	—
	Part No.: 08027-10210 (Natural color) 08027-10220 (Black)	Part No.: 08027-10260 (Natural color) 08027-10270 (Black)	
3	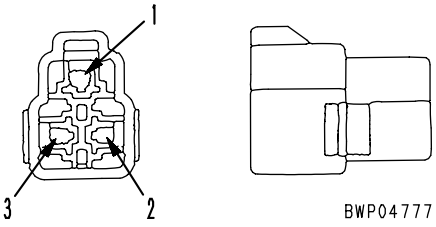	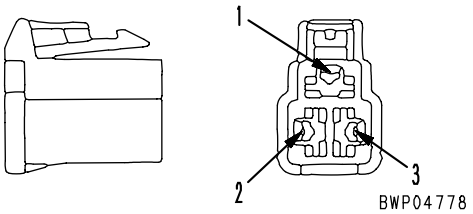	—
	Part No.:08027-10310	Part No.:08027-10360	
4	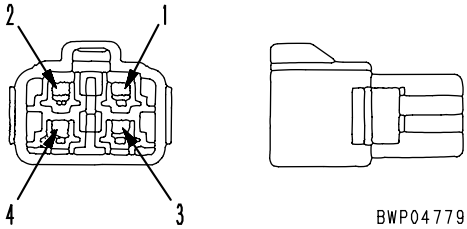	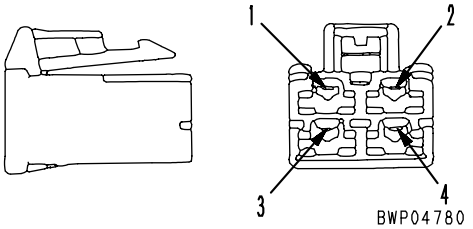	—
	Part No.: 08027-10410 (Natural color) 08027-10420 (Black)	Part No.: 08027-10460 (Natural color) 08027-10470 (Black)	
6	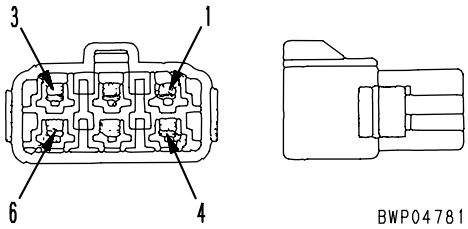	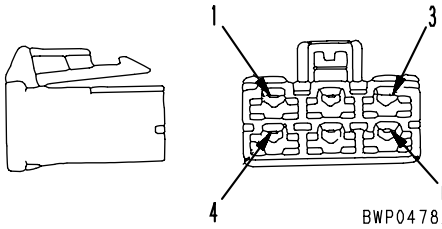	—
	Part No.: 08027-10610 (Natural color) 08027-10620 (Black)	Part No.: 08027-10660 (Natural color) 08027-10670 (Black)	

Total number of pins	KES 1 (For automobile) type connector		
	Male (Housing: Receptacle)	Female (Housing: Plug)	Part No. of T-adapter
8	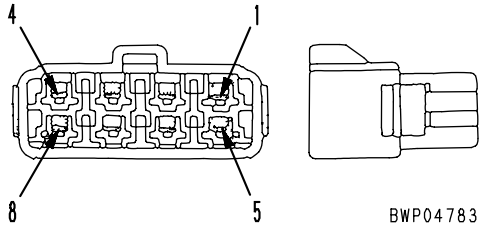	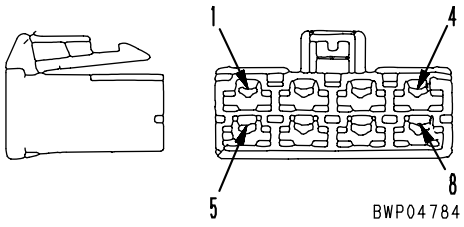	—
	Part No.: 08027-10810 (Natural color) 08027-10820 (Black)	Part No.: 08027-10860 (Natural color) 08027-10870 (Black)	

Total number of pins	Connector for relay (Receptacle)		
	Male (Housing: Receptacle)	Female (Housing: Plug)	Part No. of T-adapter
5	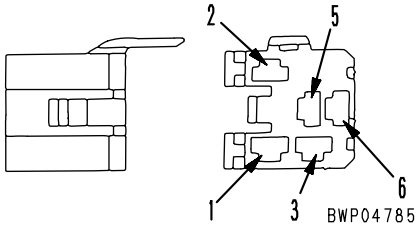	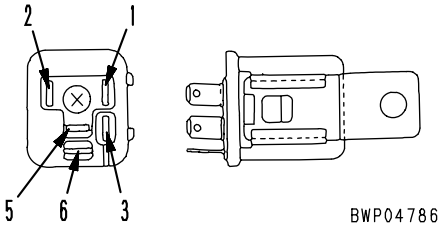	799-601-7360
	—	—	
6	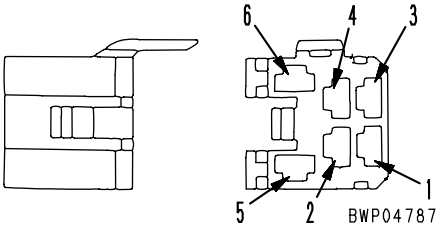	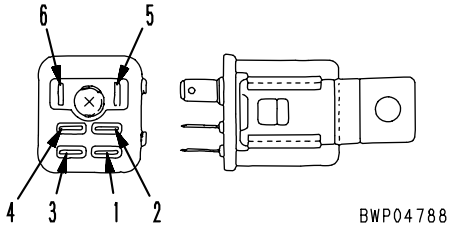	799-601-7370
	—	—	

Total number of pins	F type connector		
	Male (Housing: Receptacle)	Female (Housing: Plug)	Part No. of T-adapter
4	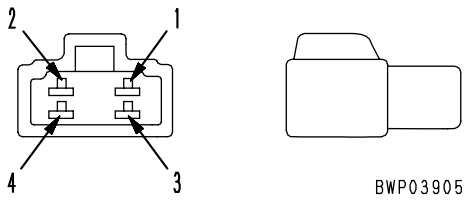	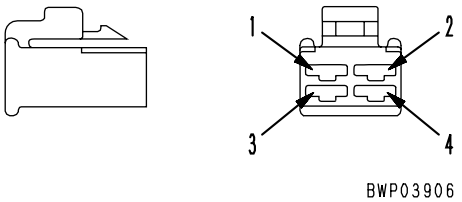	—
	—	—	

[Pin No. is printed on connector (wire insertion side), too.]

Type (shell size code)	HD30 Series connector		
	Body (Plug)	Body (Receptacle)	Part No. of T-adapter
18-8 (1)	Pin (Male terminal)	Pin (Female termial)	799-601-9210
	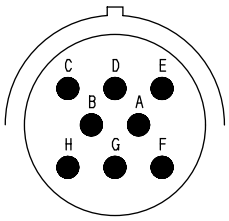 BWP05001	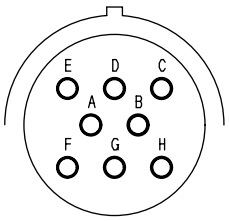 BWP05002	
	Part No.: 08191-11201, 08191-11202, 08191-11205, 08191-11206	Part No.: 08191-14101, 08191-14102, 08191-14105, 08191-14106	
	Pin (Female termial)	Pin (Male terminal)	799-601-9210
	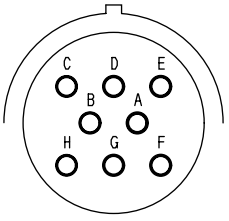 BWP05003	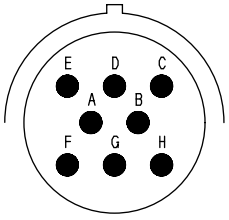 BWP05004	
	Part No.: 08191-12201, 08191-12202, 08191-12205, 08191-12206	Part No.: 08191-13101, 08191-13102, 08191-13105, 08191-13106	
18-14 (2)	Pin (Male terminal)	Pin (Female termial)	799-601-9220
	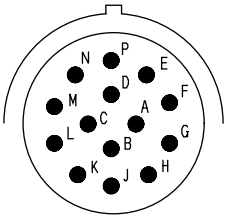 BWP05005	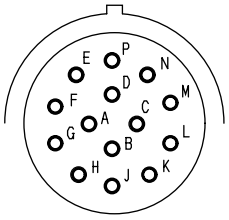 BWP05006	
	Part No.: 08191-21201, 08191-12202, 08191-21205, 08191-12206	Part No.: 08191-24101, 08191-24102, 08191-24105, 08191-24106	
	Pin (Female termial)	Pin (Male terminal)	799-601-9220
	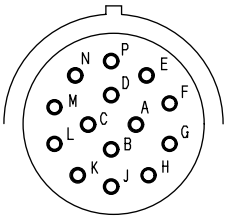 BWP05007	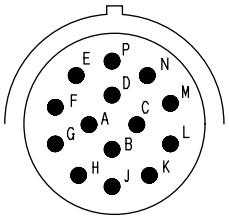 BWP05008	
	Part No.: 08191-22201, 08191-22202, 08191-22205, 08191-22206	Part No.: 08191-23101, 08191-23102, 08191-23105, 08191-23106	

[Pin No. is printed on connector (wire insertion side), too.]

Type (shell size code)	HD30 Series connector		
	Body (Plug)	Body (Receptacle)	Part No. of T-adapter
18-20 (3)	Pin (Male terminal)	Pin (Female terminal)	799-601-9230
	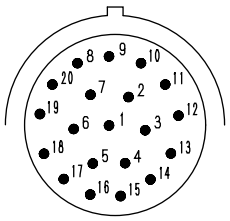 BWP05009	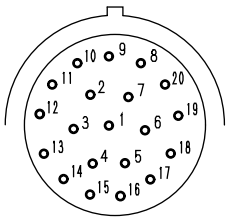 BWP05010	
	Part No.:08191-31201, 08191-31202	Part No.:08191-34101, 08191-34102	
	Pin (Female terminal)	Pin (Male terminal)	799-601-9230
	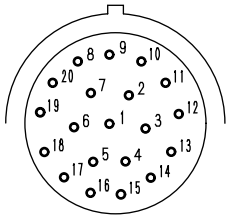 BWP05011	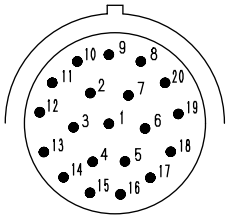 BWP05012	
	Part No.:08191-32201, 08191-32202	Part No.:08191-33101, 08191-33102	
18-21 (4)	Pin (Male terminal)	Pin (Female terminal)	799-601-9240
	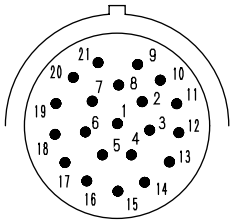 BWP05013	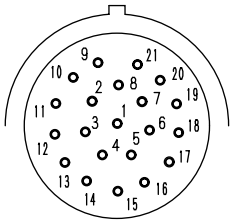 BWP05014	
	Part No.:08191-41201, 08191-42202	Part No.:08191-44101, 08191-44102	
	Pin (Female terminal)	Pin (Male terminal)	799-601-9240
	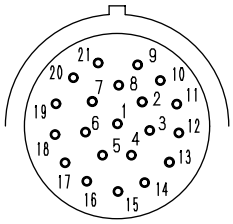 BWP05015	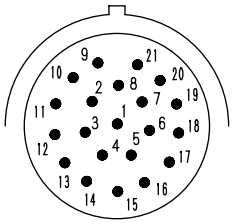 BWP05016	
	Part No.:08191-42201, 08191-42202	Part No.:08191-43101, 08191-43102	

[Pin No. is printed on connector (wire insertion side), too.]

Type (shell size code)	HD30 Series connector		
	Body (Plug)	Body (Receptacle)	Part No. of T-adapter
24-9 (5)	Pin (male terminal)	Pin (Female terminal)	799-601-9250
	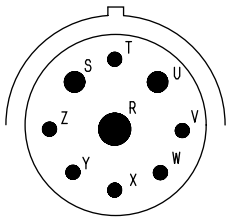 BWP05017	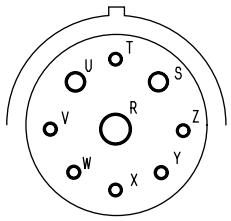 BWP05018	
	Part No.:08191-51201, 08191-51202	Part No.:08191-54101, 08191-54102	
	Pin (Female terminal)	Pin (Male terminal)	799-601-9250
	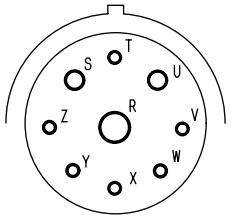 BWP05019	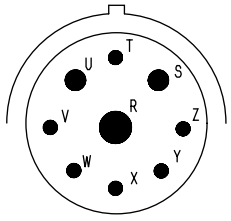 BWP05020	
	Part No.:08191-52201, 08191-52202	Part No.:08191-53101, 08191-53102	
24-16 (6)	Pin (Male terminal)	Pin (Female terminal)	799-601-9260
	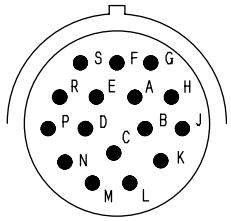 BWP05021	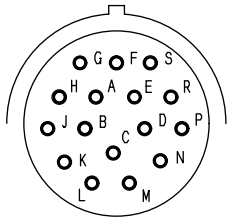 BWP05022	
	Part No.: 08191-61201, 08191-62202, 08191-61205, 08191-62206	Part No.: 08191-64101, 08191-64102, 08191-64105, 08191-64106	
	Pin (Female terminal)	Pin (Male terminal)	799-601-9260
	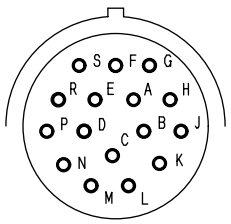 BWP05023	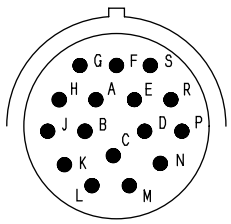 BWP05024	
	Part No.: 08191-62201, 08191-62202, 08191-62205, 08191-62206	Part No.: 08191-63101, 08191-63102, 08191-63105, 08191-63106	

[Pin No. is printed on connector (wire insertion side), too.]

Type (shell size code)	HD30 Series connector		
	Body (Plug)	Body (Receptacle)	Part No. of T-adapter
24-21 (7)	Pin (Male terminal)	Pin (Female terminal)	799-601-9270
	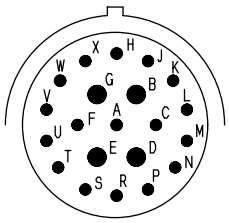 BWP05025	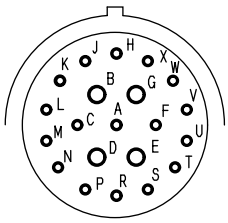 BWP05026	
	Part No.: 08191-71201, 08191-71202, 08191-71205, 08191-71206	Part No.: 08191-74101, 08191-74102, 08191-74105, 08191-74106	
	Pin (Female terminal)	Pin (Male terminal)	799-601-9270
	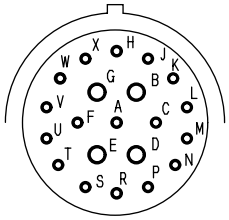 BWP05027	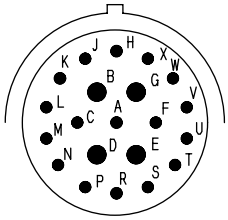 BWP05028	
	Part No.: 08191-72201, 08191-72202, 08191-72205, 08191-72206	Part No.: 08191-73101, 08191-73102, 08191-73105, 08191-73106	
24-23 (8)	Pin (Male terminal)	Pin (Female terminal)	799-601-9280
	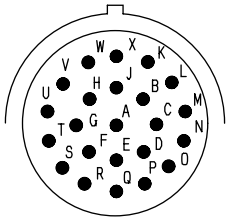 BWP05029	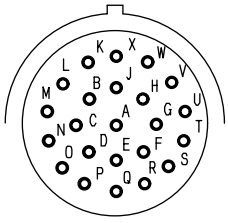 BWP05030	
	Part No.: 08191-81201, 08191-81202 08191-81203, 08191-81204 08191-81205, 08191-80206	Part No.: 08191-84101, 08191-84102 08191-84103, 08191-84104 08191-84105, 08191-84106	
	Pin (Female terminal)	Pin (Male terminal)	799-601-9280
	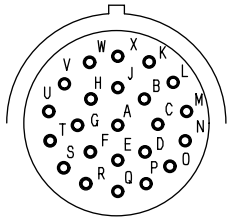 BWP05031	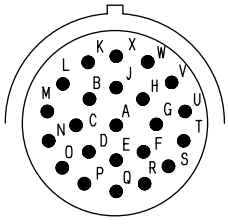 BWP05032	
	Part No.: 08191-82201, 08191-82202 08191-82203, 08191-82204 08191-82205, 08191-82206	Part No.: 08191-83101, 08191-83102 08191-83103, 08191-83104 08191-83105, 08191-83106	

[Pin No. is printed on connector (wire insertion side), too.]

<table>
<tr><td rowspan="2">Type (shell size code)</td><td colspan="3">HD30 Series connector</td></tr>
<tr><td>Body (Plug)</td><td>Body (Receptacle)</td><td>Part No. of T-adapter.</td></tr>
<tr><td rowspan="4">24-31 (9)</td><td>Pin (Male terminal)</td><td>Pin (Female terminal)</td><td rowspan="2">799-601-9290</td></tr>
<tr><td> 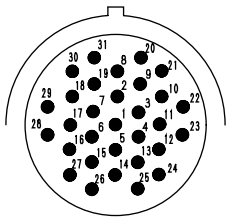
BWP05033</td><td> 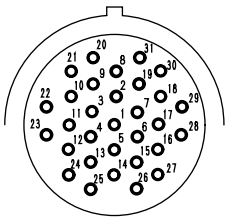
BWP05034</td></tr>
<tr><td>Part No.: 08191-91203, 08191-91204, 08191-91205, 08191-91206</td><td>Part No.: 08191-94103, 08191-94104, 08191-94105, 08191-94106</td></tr>
<tr><td>Pin (Female terminal)</td><td>Pin (Male terminal)</td><td rowspan="2">799-601-9290</td></tr>
<tr><td> 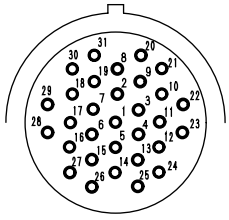
BWP05035</td><td> 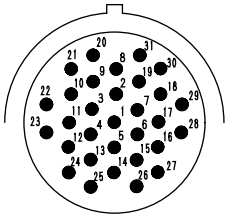
BWP05036</td></tr>
<tr><td>Part No.: 08191-92203, 08191-92204, 08191-92205, 08191-92206</td><td>Part No.: 08191-93103, 08191-93104, 08191-93105, 08191-93106</td></tr>
</table>

[Pin No. is printed on connector (wire insertion side), too.]

Total number of pins	DT Series connector		
	Body (Plug)	Body (Receptacle)	Part No. of T-adapter
2	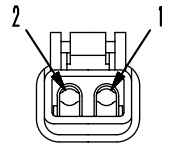 BWP05037	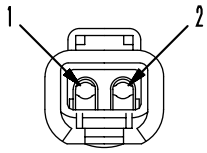 BWP05038	799-601-9020
	Part No.: 08192-12200 (Normal type) 08192-22200 (Fine wire type)	Part No.: 08192-12100 (Normal type) 08192-22100 (Fine wire type)	
3	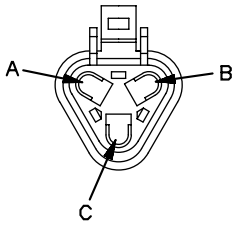 BWP05039	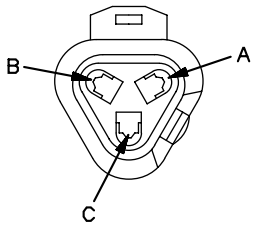 BWP05040	799-601-9030
	Part No.: 08192-13200 (Normal type) 08192-23200 (Fine wire type)	Part No.: 08192-13100 (Normal type) 08192-23100 (Fine wire type)	
4	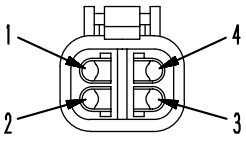 BWP05041	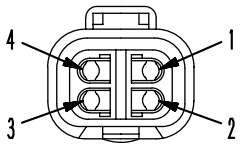 BWP05042	799-601-9040
	Part No.: 08192-14200 (Normal type) 08192-24200 (Fine wire type)	Part No.: 08192-14100 (Normal type) 08192-24100 (Fine wire type)	
6	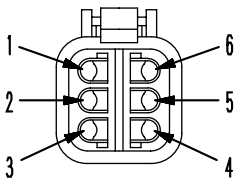 BWP05043	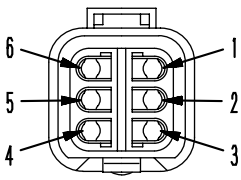 BWP05044	799-601-9050
	Part No.: 08192-16200 (Normal type) 08192-26200 (Fine wire type)	Part No.: 08192-16100 (Normal type) 08192-26100 (Fine wire type)	

[Pin No. is printed on connector (wire insertion side), too.]

Total number of pins	DT Series connector		
	Body (Plug)	Body (Receptacle)	Part No. of T-adapter
8	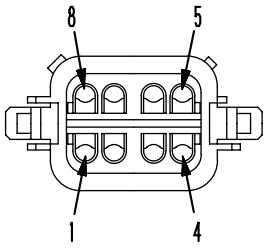 BWP05045	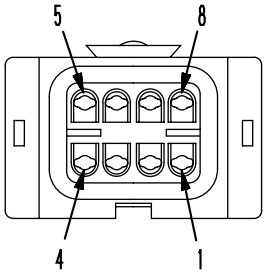 BWP05046	Body color (Gray): 799-601-9060 Body color (Black): 799-601-9070 Body color (Green): 799-601-9080 Body color (Brown): 799-601-9090
	Part No.: 08192-1820☐ (Normal type) 08192-2820☐ (Fine wire type)	Part No.: 08192-1810☐ (Normal type) 08192-2810☐ (FIne wire type)	
12	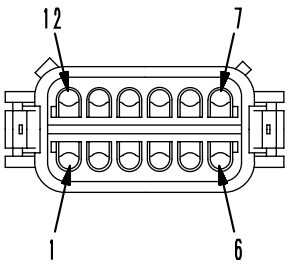 BWP05047	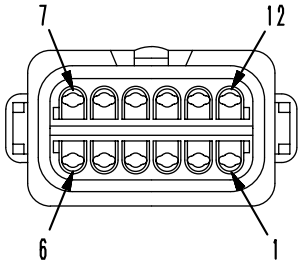 BWP05048	Body color (Gray): 799-601-9110 Body color (Black): 799-601-9120 Body color (Green): 799-601-9130 Body color (Brown): 799-601-9140
	Part No.: 08192-1920☐ (Normal type) 08192-2920☐ (Fine wire type)	Part No.: 08192-1910☐ (Normal type) 08192-2910☐ (Fine wire type)	

[Pin No. is printed on connector (wire insertion side), too.]

Total number of pins	DTM Series connector		
	Body (Plug)	Body (Receptacle)	Part No. of T-adapter
2	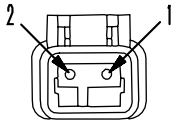 BWP05049	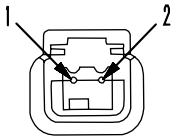 BWP05050	799-601-9010
	Part No.: 08192-02200	Part No.: 08192-02100	

[Pin No. is printed on connector (wire insertion side), too.]

Total number of pins	DTHD Series connector		
	Body (Plug)	Body (Receptacle)	Part No. of T-adapter
1	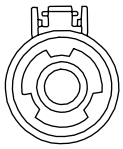 BWP05051	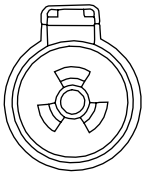 BWP05052	—
	Part No.: 08192-31200 (Contact size#12) 08192-41200 (Contact size #8) 08192-51200 (Contact size #4)	Part No.: 08192-31100 (Contact size#12) 08192-41100 (Contact size #8) 08192-51100 (Contact size #4)	

[Pin No. is printed on connector (wire insertion side), too.]

Total number of pins	DRC26 Series connector		
	Male (Housing: Receptacle)	Female (Housing: Plug)	Part No. of T-adapter
24	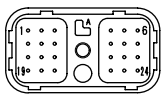 BJD12722	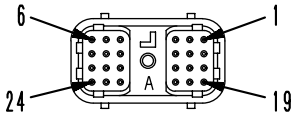 BJD12723	799-601-9360
	—	Part No.:7821-93-3110	
40 (A)	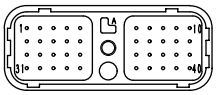 BJD12724	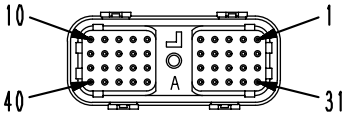 BJD12725	799-601-9350
	—	Part No.:7821-93-3120	
40 (B)	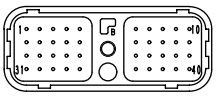 BJD12726	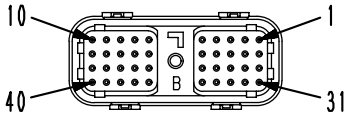 BJD12727	799-601-9350
	—	Part No.:7821-93-3130	

T-boxes and T-adapters table

★ The part Nos. of the T-boxes, T-adapters, and other parts are shown on the leftmost column and the part Nos. of the T-adapter kits are shown on the top line.

Part No.	Part name	Number of pins	Distinction symbol	T-adapter kit																	Out of kit
				799-601-2500	799-601-2700	799-601-2800	799-601-2900	799-601-3000	799-601-5500	799-601-6000	799-601-6500	799-601-7000	799-601-7100	799-601-7400	799-601-7500	799-601-8000	799-601-9000	799-601-9100	799-601-9200	799-601-9300	
799-601-2600	T-box (for ECONO)	21		●		●	●						●	●		●					
799-601-3100	T-box (for MS)	37						●													
799-601-3200	T-box (for MS)	37						●													
799-601-3300	T-box (for ECONO)	24								●											
799-601-3360	• Plate for MS (24-pin)									●											
799-601-3370	• Plate for MS (17-pin)									●											
799-601-3380	• Plate for MS (14-pin)									●											
799-601-3410	Adapter for BENDIX (MS)	24	MS-24P							●	●										
799-601-3420	Adapter for BENDIX (MS)	24	MS-24P							●	●										
799-601-3430	Adapter for BENDIX (MS)	17	MS-17P							●	●										
799-601-3440	Adapter for BENDIX (MS)	17	MS-17P							●	●										
799-601-3450	Adapter for BENDIX (MS)	5	MS-5P						●	●											
799-601-3460	Adapter for BENDIX (MS)	10	MS-10P							●	●										
799-601-3510	Adapter for BENDIX (MS)	5	MS-5S						●	●											
799-601-3520	Adapter for BENDIX (MS)	17	MS-17P						●	●											
799-601-3530	Adapter for BENDIX (MS)	19	MS-19P							●	●										
799-601-2910	Adapter for BENDIX (MS)	14	MS-14P						●	●											
799-601-3470	Case									●											
799-601-2710	Adapter for MIC	5	MIC-5P	●	●		●							●							
799-601-2720	Adapter for MIC	13	MIC-13P	●	●		●							●							
799-601-2730	Adapter for MIC	17	MIC-17P	●	●	●	●						●	●		●					
799-601-2740	Adapter for MIC	21	MIC-21P	●	●	●	●						●	●		●					
799-601-2950	Adapter for MIC	9	MIC-9P									●	●	●		●					
799-601-2750	Adapter for ECONO	2	ECONO2P	●	●																
799-601-2760	Adapter for ECONO	3	ECONO3P	●	●																
799-601-2770	Adapter for ECONO	4	ECONO4P	●	●																
799-601-2780	Adapter for ECONO	8	ECONO8P	●	●																
799-601-2790	Adapter for ECONO	12	ECONO12P	●	●																
799-601-2810	Adapter for DLI	8	DLI-8P	●	●																
799-601-2820	Adapter for DLI	12	DLI-12P	●	●																
799-601-2830	Adapter for DLI	16	DLI-16P	●	●																
799-601-2840	Extension cable (ECONO type)	12	ECONO12P	●	●									●							
799-601-2850	Case			●																	
799-601-4210	Adapter for DRC	50	DRC50																		●
799-601-7010	Adapter for X (T-branch)	1												●		●					
799-601-7020	Adapter for X	2	X2P									●	●	●		●					
799-601-7030	Adapter for X	3	X3P									●	●	●		●					
799-601-7040	Adapter for X	4	X4P									●	●	●		●					
799-601-7050	Adapter for SWP	6	SW6P									●	●	●							
799-601-7060	Adapter for SWP	8	SW8P									●	●	●							
799-601-7310	Adapter for SWP	12	SW12P																		●

Part No.	Part name	Number of pins	Distinction symbol	T-adapter kit																	Out of kit
				799-601-2500	799-601-2700	799-601-2800	799-601-2900	799-601-3000	799-601-5500	799-601-6000	799-601-6500	799-601-7000	799-601-7100	799-601-7400	799-601-7500	799-601-8000	799-601-9000	799-601-9100	799-601-9200	799-601-9300	
799-601-7070	Adapter for SWP	14	SW14P											●		●					
799-601-7320	Adapter for SWP	16	SW16P																		●
799-601-7080	Adapter for M (T-branch)	1												●		●					
799-601-7090	Adapter for M	2	M2P									●	●	●		●					
799-601-7110	Adapter for M	3	M3P									●	●	●		●					
799-601-7120	Adapter for M	4	M4P									●	●	●		●					
799-601-7130	Adapter for M	6	M6P									●	●	●		●					
799-601-7340	Adapter for M	8	M8P																		●
799-601-7140	Adapter for S	8	S8P									●	●	●		●					
799-601-7150	Adapter for S (White)	10	S10P									●	●	●		●					
799-601-7160	Adapter for S (Blue)	12	S12P									●	●	●							
799-601-7170	Adapter for S (Blue)	16	S16P									●	●	●		●					
799-601-7330	Adapter for S (White)	16	S16PW													●					
799-601-7350	Adapter for S (White)	12	S12PW																		●
799-601-7180	Adapter for AMP040	8	A8P											●							
799-601-7190	Adapter for AMP040	12	A12P											●		●					
799-601-7210	Adapter for AMP040	16	A16P									●	●	●		●					
799-601-7220	Adapter for AMP040	20	A20P									●	●	●		●					
799-601-7230	Short connector for X	2										●	●	●		●					
799-601-7240	Case											●	●								
799-601-7270	Case													●							
799-601-7510	Adapter for 070	10	07-10												●						
799-601-7520	Adapter for 070	12	07-12												●						
799-601-7530	Adapter for 070	14	07-14												●						
799-601-7540	Adapter for 070	18	07-18												●						
799-601-7550	Adapter for 070	20	07-20												●						
799-601-7360	Adapter for relay	5	REL-5P																		●
799-601-7370	Adapter for relay	6	REL-6P																		●
799-601-7380	Adapter for JFC	2																			●
799-601-9010	Adapter for DTM	2	DTM2														●		●		
799-601-9020	Adapter for DT	2	DT2														●		●		
799-601-9030	Adapter for DT	3	DT3														●		●		
799-601-9040	Adapter for DT	4	DT4														●		●		
799-601-9050	Adapter for DT	6	DT6														●		●		
799-601-9060	Adapter for DT (Gray)	8	DT8GR														●		●		
799-601-9070	Adapter for DT (Black)	8	DT8B														●		●		
799-601-9080	Adapter for DT (Green)	8	DT8G														●		●		
799-601-9090	Adapter for DT (Brown)	8	DT8BR														●		●		
799-601-9110	Adapter for DT (Gray)	12	DT12GR														●		●		
799-601-9120	Adapter for DT (Black)	12	DT12B														●		●		
799-601-9130	Adapter for DT (Green)	12	DT12G														●		●		
799-601-9140	Adapter for DT	12	DT12BR														●		●		
799-601-9210	Adapter for HD30-18	8	D18-8														●	●			
799-601-9220	Adapter for HD30-18	14	D18-14														●	●			
799-601-9230	Adapter for HD30-18	20	D18-20														●	●			

Part No.	Part name	Number of pins	Distinction symbol	T-adapter kit																Out of kit
				799-601-2500	799-601-2700	799-601-2800	799-601-2900	799-601-3000	799-601-5500	799-601-6000	799-601-6500	799-601-7000	799-601-7100	799-601-7400	799-601-7500	799-601-8000	799-601-9000	799-601-9100	799-601-9200	799-601-9300	
799-601-9240	Adapter for HD30-18	21	D18-21														●	●			
799-601-9250	Adapter for HD30-24	9	D24-9														●	●			
799-601-9260	Adapter for HD30-24	16	D24-16														●	●			
799-601-9270	Adapter for HD30-24	21	D24-21														●	●			
799-601-9280	Adapter for HD30-24	23	D24-23														●	●			
799-601-9290	Adapter for HD30-24	31	D24-31														●	●			
799-601-9310	Plate for HD30 (24-pin)																●	●		●	
799-601-9320	T-box (for DT and HD)	12															●	●		●	
799-601-9330	Case																●				
799-601-9340	Case																	●			
799-601-9350	Adapter for DRC	40	DRC-40																	●	
799-601-9360	Adapter for DRC	24	DRC-24																	●	
799-601-9410	Adapter for engine (CRI-T2)	2	G																		●
799-601-9420	Adapter for engine (CRI-T2) Adapter for engine (CRI-T3)	3	A3																		●
799-601-9430	Adapter for engine (CRI-T2) Adapter for engine (CRI-T3)	2	P																		●
799-601-9440	Adapter for engine (CRI-T2)	3	1,2,3																		●
795-799-5520	Adapter for engine (HPI-T2)	2	S																		●
795-799-5530	Adapter for engine (HPI-T2) Adapter for engine (CRI-T3)	2	C																		●
795-799-5540	Adapter for engine (HPI-T2) Adapter for engine (CRI-T3)	2	A																		●
795-799-5460	Adapter for engine (HPI-T2)	3																			●
795-799-5470	Adapter for engine (HPI-T2)	3																			●
795-799-5480	Adapter for engine (HPI-T2)	3																			●
799-601-4160	Adapter for engine (CRI-T3)	2	OIL																		●
799-601-4340	Adapter for engine (CRI-T3)	2	1,2,3																		●
799-601-4130	Adapter for engine (CRI-T3)	3	FCIN																		●
799-601-4140	Adapter for engine (CRI-T3)	3	FCIG																		●
799-601-4150	Adapter for engine (CRI-T3)	3	FCIB																		●
799-601-4180	Adapter for engine (CRI-T3)	3	FCIP3																		●
799-601-4190	Adapter for engine (CRI-T3)	3	1,2,3																		●
799-601-4240	Adapter for engine (CRI-T3)	3	1,2,3																		●
799-601-4250	Adapter for engine (CRI-T3)	3	1,2,3																		●
799-601-4330	Adapter for engine (CRI-T3)	3	1,2,3																		●
799-601-4230	Adapter for engine (CRI-T3)	4	1,2,3,4																		●
799-601-4260	Adapter for controller (ENG)	4	DTP4																		●
799-601-4210	Adapter for controller (ENG)	50	DRC50																		●
799-601-4220	Adapter for controller (ENG)	60	DRC60																		●
799-601-4280	Box for controller (PUMP)	121																			●
799-601-9720	Adapter for controller (HST)	16	HST16A																		●
799-601-9710	Adapter for controller (HST)	16	HST16B																		●
799-601-9370	Adapter for controller (HST)	26	HST26A																		●

D155AX-6 Bulldozer

Form No. SEN00851-00

© 2006 KOMATSU
All Rights Reserved
Printed in Japan 02-06 (02)

BULLDOZER

D155AX-6

Machine model	Serial number
D155AX-6	80001 and up

40 Troubleshooting

Troubleshooting by failure and error codes, Part 1

Troubleshooting by failure and error codes, Part 1 3
Failure codes table 3
Before carrying out troubleshooting when failure code is displayed 10
Information in troubleshooting table 14
Failure code [1500L0] Transmission clutch: Abnormal 16
Failure code [15SAL1] Forward clutch: Fill high 17
Failure code [15SALH] Forward clutch: Fill low 18
Failure code [15SBL1] Reverse clutch: Fill high 19
Failure code [15SBLH] Reverse clutch: Fill low 20
Failure code [15SEL1] Speed 1st clutch: Fill high 21
Failure code [15SELH] Speed 1st clutch: Fill low 22
Failure code [15SFL1] Speed 2nd clutch: Fill high 23
Failure code [15SFLH] Speed 2nd clutch: Fill low 24
Failure code [15SGL1] Speed 3rd clutch: Fill high 25

Failure code [15SGLH] Speed 3rd clutch: Fill low 26
Failure code [15SJL1] L/U: Fill high 28
Failure code [15SJLH] L/U: Fill low 30
Failure code [2301L1] Right brake: Fill high 32
Failure code [2301LH] Right brake: Fill low 33
Failure code [2302L1] Left brake: Fill high 34
Failure code [2302LH] Left brake: Fill low 35
Failure code [7RFAKA] ECM HOLD RELAY: Disconnection 36
Failure code [AA10NX] Air Cleaner Clogging 38
Failure code [AB00MA] Battery Charge Abnormal 40
Failure code [B@BAZG] Eng Oil Press Low 42
Failure code [B@BCNS] Eng Water Overheat 42
Failure code [B@BCZK] Eng Water Level Low 43
Failure code [B@CENS] T/C Oil Overheat 43
Failure code [B@HANS] Hyd Oil Overheat 44

Troubleshooting by failure and error codes, Part 1

Failure codes table

Action code	Failure code	Trouble (Displayed on screen)	Alarm buzzer	Component in charge	Category of history
E03	1500L0	Transmission clutch: Abnormal	●	P/T	Electrical system
E03	15SAL1	Forward clutch: Fill high	●	P/T	Electrical system
E03	15SALH	Forward clutch: Fill low	●	P/T	Electrical system
E03	15SBL1	Reverse clutch: Fill high	●	P/T	Electrical system
E03	15SBLH	Reverse clutch: Fill low	●	P/T	Electrical system
E03	15SEL1	Speed 1st clutch: Fill high	●	P/T	Electrical system
E03	15SELH	Speed 1st clutch: Fill low	●	P/T	Electrical system
E03	15SFL1	Speed 2nd clutch: Fill high	●	P/T	Electrical system
E03	15SFLH	Speed 2nd clutch: Fill low	●	P/T	Electrical system
E03	15SGL1	Speed 3rd clutch: Fill high	●	P/T	Electrical system
E03	15SGLH	Speed 3rd clutch: Fill low	●	P/T	Electrical system
E02	15SJL1	L/U: Fill high	●	P/T	Electrical system
E02	15SJLH	L/U: Fill low	●	P/T	Electrical system
E04	2301L1	Right brake: Fill high	●	P/T	Electrical system
E04	2301LH	Right brake: Fill low	●	P/T	Electrical system
E04	2302L1	Left brake: Fill high	●	P/T	Electrical system
E04	2302LH	Left brake: Fill low	●	P/T	Electrical system
	7RFAKA	ECM HOLD RELAY: Disconnection		P/T	Electrical system
	AA10NX	Air Cleaner Clogging		MON	Mechanical system
	AB00MA	Battery Charge Abnormal		MON	Mechanical system
	B@BAZG	Eng Oil Press Low	▲	ENG	Mechanical system
	B@BCNS	Eng Water Overheat	▲	ENG	Mechanical system
	B@BCZK	Eng Water Level Low		MON	Mechanical system
	B@CENS	T/C Oil Overheat	▲	P/T	Mechanical system
	B@HANS	Hyd Oil Overheat	▲	MON	Mechanical system
E04	CA111	EMC Critical Internal Failure	●	ENG	Electrical system
E04	CA115	Eng Ne and Bkup Speed Sens Error	●	ENG	Electrical system
E03	CA122	Chg Air Press Sensor High Error	●	ENG	Electrical system
E03	CA123	Chg Air Press Sensor Low Error	●	ENG	Electrical system
E03	CA131	Throttle Sensor High Error	●	ENG	Electrical system
E03	CA132	Throttle Sensor Low Error	●	ENG	Electrical system
E02	CA135	Eng Oil Press Sensor High Error	●	ENG	Electrical system
E02	CA141	Eng Oil Press Sensor Low Error	●	ENG	Electrical system
E02	CA144	Coolant Temp Sens High Error	●	ENG	Electrical system
E02	CA145	Coolant Temp Sens Low Error	●	ENG	Electrical system
E01	CA153	Chg Air Temp Sensor High Error		ENG	Electrical system
E01	CA154	Chg Air Temp Sensor Low Error		ENG	Electrical system
E03	CA187	Sens Supply 2 Volt Low Error	●	ENG	Electrical system

Action code	Failure code	Trouble (Displayed on screen)	Alarm buzzer	Component in charge	Category of history
E03	CA221	Ambient Press Sens High Error	●	ENG	Electrical system
E03	CA222	Ambient Press Sens Low Error	●	ENG	Electrical system
E03	CA227	Sens Supply 2 Volt High Error	●	ENG	Electrical system
E00	CA234	Eng Overspeed		ENG	Mechanical system
E03	CA238	Ne Speed Sens Supply Volt Error	●	ENG	Electrical system
E01	CA263	Fuel Temp Sensor High Error		ENG	Electrical system
E01	CA265	Fuel Temp Sensor Low Error		ENG	Electrical system
E03	CA271	PCV1 Short Error	●	ENG	Electrical system
E03	CA272	PCV1 Open Error	●	ENG	Electrical system
E03	CA273	PCV2 Short Error	●	ENG	Electrical system
E03	CA274	PCV2 Open Error	●	ENG	Electrical system
E03	CA322	Inj #1 (L#1) Open/Short Error	●	ENG	Electrical system
E03	CA323	Inj #5 (L#5) Open/Short Error	●	ENG	Electrical system
E03	CA324	Inj #3 (L#3) Open/Short Error	●	ENG	Electrical system
E03	CA325	Inj #6 (L#6) Open/Short Error	●	ENG	Electrical system
E03	CA331	Inj #2 (L#2) Open/Short Error	●	ENG	Electrical system
E03	CA332	Inj #4 (L#4) Open/Short Error	●	ENG	Electrical system
E04	CA342	Calibration Code Incompatibility	●	ENG	Electrical system
E03	CA351	Injectors Drive Circuit Error	●	ENG	Electrical system
E03	CA352	Sens Supply 1 Volt Low Error	●	ENG	Electrical system
E03	CA386	Sens Supply 1 Volt High Error	●	ENG	Electrical system
E04	CA441	Battery Voltage Low Error	●	ENG	Electrical system
E04	CA442	Battery Voltage High Error	●	ENG	Electrical system
E03	CA449	Rail Press Very High Error	●	ENG	Electrical system
E03	CA451	Rail Press Sensor High Error	●	ENG	Electrical system
E03	CA452	Rail Press Sensor Low Error	●	ENG	Electrical system
E02	CA553	Rail Press High Error	●	ENG	Electrical system
E03	CA554	Rail Press Sensor In Range Error	●	ENG	Electrical system
E02	CA559	Rail Press Low Error	●	ENG	Electrical system
E03	CA689	Eng Ne Speed Sensor Error	●	ENG	Electrical system
E03	CA731	Eng Bkup Speed Sens Phase Error	●	ENG	Electrical system
E04	CA757	All Continuous Data Lost Error	●	ENG	Electrical system
E03	CA778	Eng Bkup Speed Sensor Error	●	ENG	Electrical system
E02	CA1228	EGR Valve Servo Error 1	●	ENG	Electrical system
E03	CA1625	EGR Valve Servo Error 2	●	ENG	Electrical system
E03	CA1626	BP Valve Sol Current High Error	●	ENG	Electrical system
E03	CA1627	BP Valve Sol Current Low Error	●	ENG	Electrical system
E02	CA1628	Bypass Valve Servo Error 1	●	ENG	Electrical system
E03	CA1629	Bypass Valve Servo Error 2	●	ENG	Electrical system
E03	CA1631	BP Valve Pos Sens High Error	●	ENG	Electrical system
E03	CA1632	BP Valve Pos Sens Low Error	●	ENG	Electrical system

Action code	Failure code	Trouble (Displayed on screen)	Alarm buzzer	Component in charge	Category of history
E03	CA1633	KOMNET Datalink Timeout Error	●	ENG	Electrical system
E01	CA1642	EGR Inlet Press Sens Low Error		ENG	Electrical system
E01	CA1653	EGR Inlet Press Sens High Error		ENG	Electrical system
E03	CA2185	Throt Sens Sup Volt High Error	●	ENG	Electrical system
E03	CA2186	Throt Sens Sup Volt Low Error	●	ENG	Electrical system
E03	CA2249	Rail Press Very Low Error	●	ENG	Electrical system
E03	CA2271	EGR Valve Pos Sens High Error	●	ENG	Electrical system
E03	CA2272	EGR Valve Pos Sens Low Error	●	ENG	Electrical system
E03	CA2351	EGR Valve Sol Current High Error	●	ENG	Electrical system
E03	CA2352	EGR Valve Sol Current Low Error	●	ENG	Electrical system
E01	CA2555	Grid Htr Relay Volt Low Error		ENG	Electrical system
E01	CA2556	Grid Htr Relay Volt High Error		ENG	Electrical system
	D110KA	Battery relay: Disconnection		P/T	Electrical system
	D110KB	Battery Relay: Drive Short Circuit		P/T	Electrical system
E02	D130KA	Neutral relay: Disconnection	●	P/T	Electrical system
E02	D130KB	Neutral relay: Short circuit	●	P/T	Electrical system
E01	D161KA	Back-up alarm relay: Disconnection		P/T	Electrical system
E01	D161KB	Back-up alarm relay: Short circuit		P/T	Electrical system
	D190KA	ACC signal relay: Disconnection		P/T	Electrical system
	D190KB	ACC signal relay: Short circuit		P/T	Electrical system
E03	D5ZKKX	Throttle Dial: Out of normal range	●	P/T	Electrical system
E03	DAFRKR	CAN Disconnection	●	MON	Electrical system
E03	DB2RKR	CAN Disconnection	●	ENG	Electrical system
E04	DB90KK	WE controller: Source voltage reduction	●	W/E	Electrical system
E03	DB90KR	PT controller: Can communication lost	●	P/T	Electrical system
E01	DB90KT	WE controller: Abnormality in controller		W/E	Electrical system
E03	DB95KK	WE controller: Source voltage reduction	●	W/E	Electrical system
E03	DB97KK	WE controller: Source voltage reduction	●	W/E	Electrical system
E04	DB99KQ	WE controller: Type select signal	●	W/E	Electrical system
E03	DB9RKR	WE controller: Can communication lost	●	W/E	Electrical system
E03	DBE0KK	PT controller: Source voltage reduction	●	P/T	Electrical system
E01	DBE0KT	PT controller: Abnormality in controller		P/T	Electrical system
E02	DBE6KK	PT controller: Source voltage reduction	●	P/T	Electrical system
E02	DBE7KK	PT controller: Source voltage reduction	●	P/T	Electrical system
E04	DBE9KQ	PT controller: Type select signal	●	P/T	Electrical system
E02	DD12KA	Shift up Sw: Disconnection	●	P/T	Electrical system
E02	DD12KB	Shift up Sw: Short circuit	●	P/T	Electrical system
E02	DD13KA	Shift down Sw: Disconnection	●	P/T	Electrical system
E02	DD13KB	Shift down Sw: Short circuit	●	P/T	Electrical system
E03	DD14KA	Parking lever Sw: Disconnection	●	P/T	Electrical system
E03	DD14KB	Parking lever Sw: Short circuit	●	P/T	Electrical system

Action code	Failure code	Trouble (Displayed on screen)	Alarm buzzer	Component in charge	Category of history
E02	DDDDKA	Back up brake Sw: Disconnection	●	P/T	Electrical system
E02	DDDDKB	Back up brake Sw: Short circuit	●	P/T	Electrical system
E02	DDDDKX	Back up brake Sw: Signal mismatch	●	P/T	Electrical system
E02	DDN7KA	WEQ Knob Sw (down): Disconnection	●	W/E	Electrical system
E02	DDN7KB	WEQ Knob Sw (down): Short circuit	●	W/E	Electrical system
E01	DDN9KA	WEQ Knob Sw (up): Disconnection		W/E	Electrical system
E01	DDN9KB	WEQ Knob Sw (up): Short circuit		W/E	Electrical system
E03	DDNLKA	Weq lock Sw: Disconnection	●	W/E	Electrical system
E03	DDNLKB	Weq lock Sw: Short circuit	●	W/E	Electrical system
E02	DDTSL1	S/C: Fill high	●	P/T	Electrical system
E02	DDTSLH	S/C: Fill low	●	P/T	Electrical system
E03	DFA4KX	BL lever 1: Out of normal range	●	W/E	Electrical system
E03	DFA4KZ	BL lever: Disconnection or short circuit	●	W/E	Electrical system
E03	DFA4L8	BL lever: Signal mismatch	●	W/E	Electrical system
E03	DFA5KA	BL lever 1: Disconnection	●	W/E	Electrical system
E03	DFA5KB	BL lever 1: Short circuit	●	W/E	Electrical system
E03	DFA6KA	BL lever 2: Disconnection	●	W/E	Electrical system
E03	DFA6KB	BL lever 2: Short circuit	●	W/E	Electrical system
E03	DFA7KX	BT lever 1: Out of normal range	●	W/E	Electrical system
E03	DFA7KZ	BT lever: Disconnection or short circuit	●	W/E	Electrical system
E03	DFA7L8	BT lever: Signal mismatch	●	W/E	Electrical system
E03	DFA8KA	BT lever 1: Disconnection	●	W/E	Electrical system
E03	DFA8KB	BT lever 1: Short circuit	●	W/E	Electrical system
E03	DFA9KA	BT lever 2: Disconnection	●	W/E	Electrical system
E03	DFA9KB	BT lever 2: Short circuit	●	W/E	Electrical system
E03	DFAAKX	RL lever 1: Out of normal range	●	W/E	Electrical system
E03	DFAAKZ	RL lever: Disconnection or short circuit	●	W/E	Electrical system
E03	DFAAL8	RL lever: Signal mismatch	●	W/E	Electrical system
E03	DFABKA	RL lever 1: Disconnection	●	W/E	Electrical system
E03	DFABKB	RL lever 1: Short circuit	●	W/E	Electrical system
E03	DFACKA	RL lever 2: Disconnection	●	W/E	Electrical system
E03	DFACKB	RL lever 2: Short circuit	●	W/E	Electrical system
E03	DFADKX	RT lever 1: Out of normal range	●	W/E	Electrical system
E03	DFADKZ	RT lever: Disconnection or short circuit	●	W/E	Electrical system
E03	DFADL8	RT lever: Signal mismatch	●	W/E	Electrical system
E03	DFAEKA	RT lever 1: Disconnection	●	W/E	Electrical system
E03	DFAEKB	RT lever 1: Short circuit	●	W/E	Electrical system
E03	DFAFKA	RT lever 2: Disconnection	●	W/E	Electrical system
E03	DFAFKB	RT lever 2: Short circuit	●	W/E	Electrical system
E01	DGT1KA	T/C oil temp sensor: Abnormal		P/T	Electrical system
E01	DGT1KX	T/C oil temp sensor abnormal		P/T	Electrical system

Action code	Failure code	Trouble (Displayed on screen)	Alarm buzzer	Component in charge	Category of history
	DH21KA	WEQ pressure sensor: Disconnection		W/E	Electrical system
	DH21KB	WEQ pressure sensor: Short circuit		W/E	Electrical system
E02	DHT5KA	T/C in-pressure sensor: Disconnection	●	P/T	Electrical system
E02	DHT5KB	T/C in-pressure sensor: Short circuit	●	P/T	Electrical system
E02	DHT7KA	T/C out-pressure sensor: Disconnection	●	P/T	Electrical system
E02	DHT7KB	T/C out-pressure sensor: Short circuit	●	P/T	Electrical system
E03	DK10KX	Fuel control Dial: Out of normal range	●	ENG	Electrical system
E03	DK30KA	ST lever 1: Disconnection	●	P/T	Electrical system
E03	DK30KB	ST lever 1: Short circuit	●	P/T	Electrical system
E04	DK30KX	ST lever 1: Out of normal range	●	P/T	Electrical system
E04	DK30KZ	ST lever: Disconnection or short circuit	●	P/T	Electrical system
E03	DK30L8	ST lever: Signal mismatch	●	P/T	Electrical system
E03	DK31KA	ST lever 2: Disconnection	●	P/T	Electrical system
E03	DK31KB	ST lever 2: Short circuit	●	P/T	Electrical system
E03	DK40KA	Brake potentiometer: Disconnection	●	P/T	Electrical system
E03	DK40KB	Brake potentiometer: Short circuit	●	P/T	Electrical system
E04	DK55KX	FR lever: Out of normal range	●	P/T	Electrical system
E04	DK55KZ	FR lever: Disconnection or short circuit	●	P/T	Electrical system
E03	DK55L8	FR lever: Signal mismatch	●	P/T	Electrical system
E03	DK56KA	FR lever 1: Disconnection	●	P/T	Electrical system
E03	DK56KB	FR lever 1: Short circuit	●	P/T	Electrical system
E03	DK57KA	FR lever 2: Disconnection	●	P/T	Electrical system
E03	DK57KB	FR lever 2: Short circuit	●	P/T	Electrical system
E03	DKH1KA	Pitch angle sensor: Disconnection	●	P/T	Electrical system
E03	DKH1KB	Pitch angle sensor: Short circuit	●	P/T	Electrical system
E01	DLT3KA	T/M out-speed sensor: Disconnection		P/T	Electrical system
E01	DLT3KB	T/M out-speed sensor: Abnormal		P/T	Electrical system
E01	DW7BKA	Fan rev EPC: Disconnection		P/T	Electrical system
E01	DW7BKB	Fan rev EPC: Short circuit		P/T	Electrical system
E03	DWN1KA	Hss EPC1: Disconnection	●	P/T	Electrical system
E03	DWN1KB	Hss EPC1: Short circuit	●	P/T	Electrical system
E03	DWN1KY	Hss EPC1: Short circuit	●	P/T	Electrical system
E03	DWN2KA	Hss EPC2: Disconnection	●	P/T	Electrical system
E03	DWN2KB	Hss EPC2: Short circuit	●	P/T	Electrical system
E03	DWN2KY	Hss EPC2: Short circuit	●	P/T	Electrical system
E04	DWN3KA	Ssp solenoid: Disconnection	●	P/T	Electrical system
E04	DWN3KB	Ssp solenoid: Short circuit	●	P/T	Electrical system
E04	DWN3KY	Ssp solenoid: Short circuit	●	P/T	Electrical system
E01	DWN5KA	Fan pump solenoid: Disconnection		P/T	Electrical system
E01	DWN5KB	Fan pump solenoid: Short circuit		P/T	Electrical system
E01	DXA0KA	TVC Sol.: Disconnection		W/E	Electrical system

Action code	Failure code	Trouble (Displayed on screen)	Alarm buzzer	Component in charge	Category of history
E01	DXA0KB	TVC Sol.: Short circuit		W/E	Electrical system
E01	DXA0KY	TVC Sol.: Short circuit		W/E	Electrical system
E02	DXH1KA	Lock-up ECMV: Disconnection	●	P/T	Electrical system
E02	DXH1KB	Lock-up ECMV: Short circuit	●	P/T	Electrical system
E03	DXH1KY	Lock-up ECMV: Short circuit	●	P/T	Electrical system
E03	DXH4KA	1st clutch ECMV: Disconnection	●	P/T	Electrical system
E03	DXH4KB	1st clutch ECMV: Short circuit	●	P/T	Electrical system
E03	DXH4KY	1st clutch ECMV: Short circuit	●	P/T	Electrical system
E03	DXH5KA	2nd clutch ECMV: Disconnection	●	P/T	Electrical system
E03	DXH5KB	2nd clutch ECMV: Short circuit	●	P/T	Electrical system
E03	DXH5KY	2nd clutch ECMV: Short circuit	●	P/T	Electrical system
E03	DXH6KA	3rd clutch ECMV: Disconnection	●	P/T	Electrical system
E03	DXH6KB	3rd clutch ECMV: Short circuit	●	P/T	Electrical system
E03	DXH6KY	3rd clutch ECMV: Short circuit	●	P/T	Electrical system
E03	DXH7KA	R clutch ECMV: Disconnection	●	P/T	Electrical system
E03	DXH7KB	R clutch ECMV: Short circuit	●	P/T	Electrical system
E04	DXH7KY	R clutch ECMV: Short circuit	●	P/T	Electrical system
E03	DXH8KA	F clutch ECMV: Disconnection	●	P/T	Electrical system
E03	DXH8KB	F clutch ECMV: Short circuit	●	P/T	Electrical system
E04	DXH8KY	F clutch ECMV: Short circuit	●	P/T	Electrical system
E04	DXHBKA	Right brake ECMV: Disconnection	●	P/T	Electrical system
E04	DXHBKB	Right brake ECMV: Short circuit	●	P/T	Electrical system
E04	DXHBKY	Right brake ECMV: Short circuit	●	P/T	Electrical system
E04	DXHCKA	Left brake ECMV: Disconnection	●	P/T	Electrical system
E04	DXHCKB	Left brake ECMV: Short circuit	●	P/T	Electrical system
E04	DXHCKY	Left brake ECMV: Short circuit	●	P/T	Electrical system
E03	DXHRKA	Blade up EPC: Disconnection	●	W/E	Electrical system
E03	DXHRKB	Blade up EPC: Short circuit	●	W/E	Electrical system
E03	DXHRKY	Blade up EPC: Short circuit	●	W/E	Electrical system
E03	DXHSKA	Blade down EPC: Disconnection	●	W/E	Electrical system
E03	DXHSKB	Blade down EPC: Short circuit	●	W/E	Electrical system
E03	DXHSKY	Blade down EPC: Short circuit	●	W/E	Electrical system
E03	DXHTKA	Blade left 1 EPC: Disconnection	●	W/E	Electrical system
E03	DXHTKB	Blade left 1 EPC: Short circuit	●	W/E	Electrical system
E03	DXHTKY	Blade left 1 EPC: Short circuit	●	W/E	Electrical system
E03	DXHUKA	Blade right 1 EPC: Disconnection	●	W/E	Electrical system
E03	DXHUKB	Blade right 1 EPC: Short circuit	●	W/E	Electrical system
E03	DXHUKY	Blade right 1 EPC: Short circuit	●	W/E	Electrical system
E03	DXHWKA	Ripper up EPC: Disconnection	●	W/E	Electrical system
E03	DXHWKB	Ripper up EPC: Short circuit	●	W/E	Electrical system
E03	DXHWKY	Ripper up EPC: Short circuit	●	W/E	Electrical system

Action code	Failure code	Trouble (Displayed on screen)	Alarm buzzer	Component in charge	Category of history
E03	DXHXKA	Ripper down EPC: Disconnection	●	W/E	Electrical system
E03	DXHXKB	Ripper down EPC: Short circuit	●	W/E	Electrical system
E03	DXHXKY	Ripper down EPC: Short circuit	●	W/E	Electrical system
E03	DXHYKA	Ripper Tilt In EPC: Disconnection	●	W/E	Electrical system
E03	DXHYKB	Ripper Tilt In EPC: Short circuit	●	W/E	Electrical system
E03	DXHYKY	Ripper Tilt In EPC: Short circuit	●	W/E	Electrical system
E03	DXHZKA	Ripper Tilt Back EPC: Disconnection	●	W/E	Electrical system
E03	DXHZKB	Ripper Tilt Back EPC: Short circuit	●	W/E	Electrical system
E03	DXHZKY	Ripper Tilt Back EPC: Short circuit	●	W/E	Electrical system
E03	DXJ4KA	WEQ lock Sol.: Disconnection	●	W/E	Electrical system
E03	DXJ4KB	WEQ lock Sol.: Short circuit	●	W/E	Electrical system
E03	DXJ8KA	Blade left 2 EPC: Disconnection	●	W/E	Electrical system
E03	DXJ8KB	Blade left 2 EPC: Short circuit	●	W/E	Electrical system
E03	DXJ8KY	Blade left 2 EPC: Short circuit	●	W/E	Electrical system
E03	DXJ9KA	Blade right 2 EPC: Disconnection	●	W/E	Electrical system
E03	DXJ9KB	Blade right 2 EPC: Short circuit	●	W/E	Electrical system
E03	DXJ9KY	Blade right 2 EPC: Short circuit	●	W/E	Electrical system
E01	DXJAKA	Q-drop EPC: Disconnection		W/E	Electrical system
E01	DXJAKB	Q-drop EPC: Short circuit		W/E	Electrical system
E01	DXJAKY	Q-drop EPC: Short circuit		W/E	Electrical system
E02	DXJBKA	S/C ECMV: Disconnection	●	P/T	Electrical system
E02	DXJBKB	S/C ECMV: Short circuit	●	P/T	Electrical system
E02	DXJBKY	S/C ECMV: Short circuit	●	P/T	Electrical system

★ Entry order of items in table
The items are entered in the order of their failure codes (incremental order).
★ Action code
Attached: If a failure code is detected, the action code, failure code, and telephone No. (if registered) are displayed on the ordinary screen to notify the operator of the fault.
Not attached: Even if a failure code is detected, the machine monitor does not notify the operator of the fault.
★ Alarm buzzer
●: When occurrence of an error is notified to the operator, the buzzer sounds (The operator can stop the buzzer with the alarm buzzer cancel switch).
▲: Since the caution monitor is also turned ON, its function sounds the buzzer.
★ Component in charge
MON: The machine monitor is in charge of detection of fault.
ENG: The engine controller is in charge of detection of fault.
P/T: The power train controller is in charge of detection of fault.
W/E: The work equipment controller is in charge of detection of fault.
★ Category of history
Mechanical system: Fault information is recorded in the mechanical system fault history.
Electrical system: Fault information is recorded in the electrical system fault history.

Before carrying out troubleshooting when failure code is displayed

Connection table of circuit breakers and fuse boxes

★ This connection table shows the devices to which each power supply of the fuse box supplies power (An accessory power supply is a device which supplies power while the starting switch is in the ON position and an unswitched power supply is a device which supplies power while the starting switch is in the OFF and ON positions).
★ When carrying out troubleshooting related to the electrical system, you should check the circuit breakers and fuses to see if the power is supplied normally.

Circuit breakers CB1 – CB9

Power circuit breaker (Type of power supply)	Circuit breaker No.	Circuit breaker capacity	Destination of power
CB105 (Accessory power supply)	CB9	20A	Optional power supply
	CB1	20A	Power train controller
			Emergency power supply (For power train switch box)
	CB2	20A	Work equipment controller
			Emergency power supply (For work equipment switch box)
	CB3	20A	Air conditioner unit, blower motor, and compressor electromagnetic clutch
	CB4	20A	Headlamp, additional headlamp
	CB5	20A	Rear lamp, additional rear lamp, ripper point lamp
CB30 (Unswitched power supply)	CB6	20A	Starting switch
			Engine hold relay
	CB7	20A	Machine monitor
			Power train controller
			Work equipment controller
	CB8	30A	Engine controller
CB105H (Unswitched power supply)	—	—	Engine electrical intake air heater

Fuse box FS1

Power circuit breaker (Type of power supply)	Fuse No.	Fuel capacity	Destination of power
CB30 (Unswitched power supply)	1	20A	Operator's cab power supply (To connection table of fuse box Ⅱ)
CB105 (Accessory power supply)	2	5A	Backup alarm, backup alarm relay
	3	20A	Operator's cab power supply (To connection table of fuse box Ⅱ)
	4	20A	Operator's cab power supply (To connection table of fuse box Ⅱ)
Starting switch (ACC)	5	5A	Engine controller (Signal ACC)

Fuse box FS2

Power circuit breaker (Type of power supply)	Fuse No.	Fuel capacity	Destination of power
CB30 (Unswitched power supply)	1	5A	Pedal brake solenoid valve
CB105 (Accessory power supply)	2	5A	Parking brake solenoid valve
	3	20A	Engine electrical intake air heater
			Ripper pin puller solenoid valve
			Pneumatic suspension seat
	4	5A	Horn
Starting switch (ACC)	5	20A	Optional power supply

Locations of circuit breakers CB30, CB105, and CB105H (In battery room)

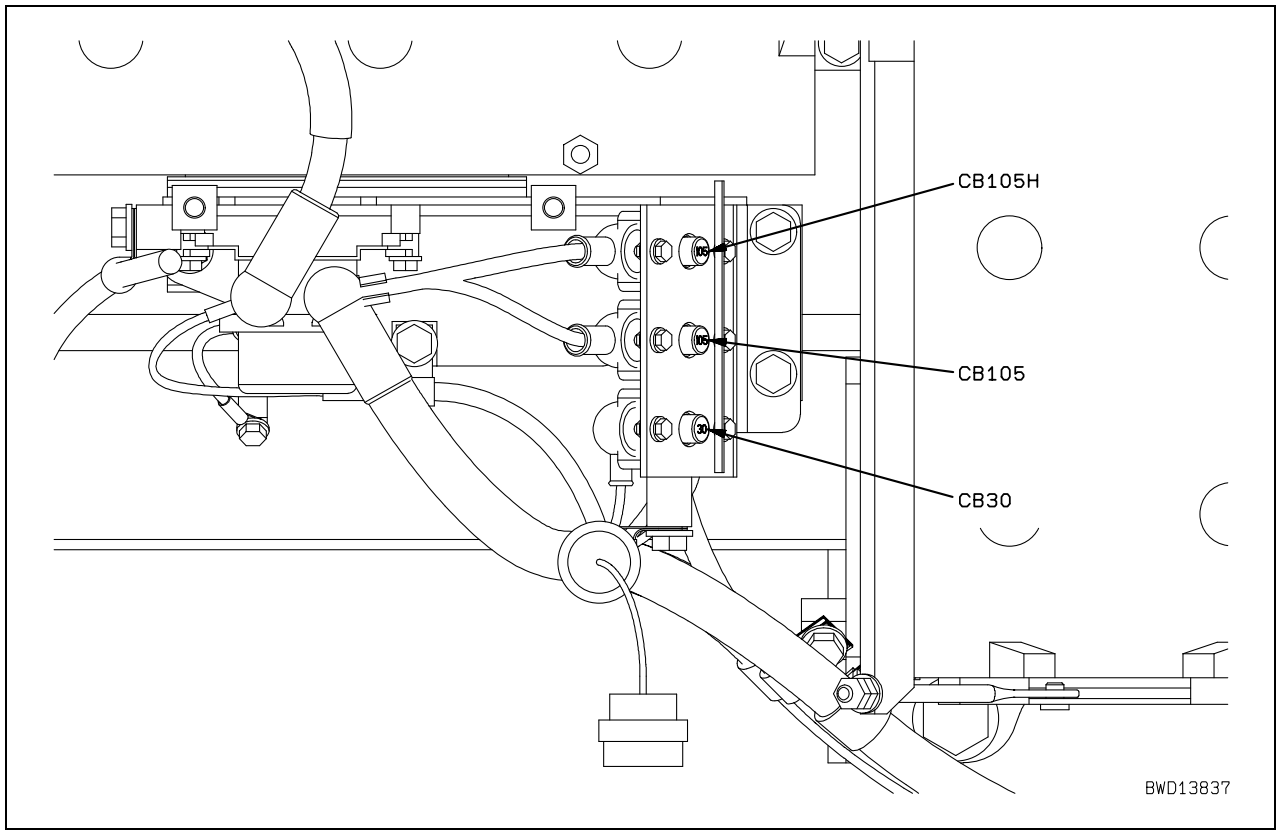

Locations of circuit breakers CB1 – CB9 and fuse boxes FS1 and FS2 (In battery room)

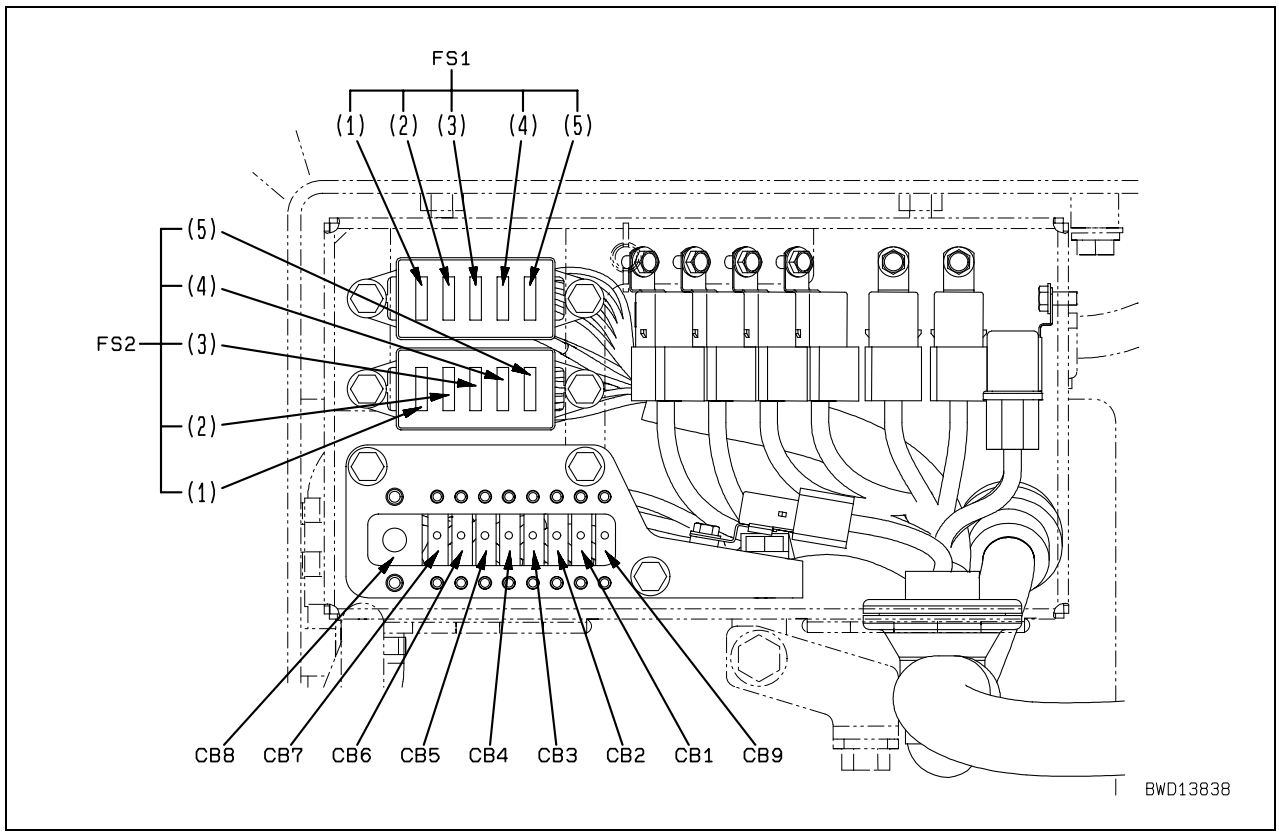

Fuse box Ⅱ

Power circuit fuse (Type of power supply)	Fuse No.	Fuel capacity	Destination of power
FS1-1 (Unswitched power supply)	1	10A	Radio
			12V accessory connector (Via DC converter)
			12V accessory socket (Via DC converter)
FS1-3 (Accessory power supply)	2	20A	Additional light relay, additional light
			Rotary lamp
	3	20A	12V accessory connector (Via DC converter)
			12V accessory socket (Via DC converter)
FS1-4 (Accessory power supply)	4	20A	Radio
			Room lamp
			Cigarette lighter
			Windshield wiper (Via intermittent relay)
	5	10A	Front wiper, rear wiper
	6	10A	Left wiper, right wiper

Location of fuse box Ⅱ (In operator's cab)

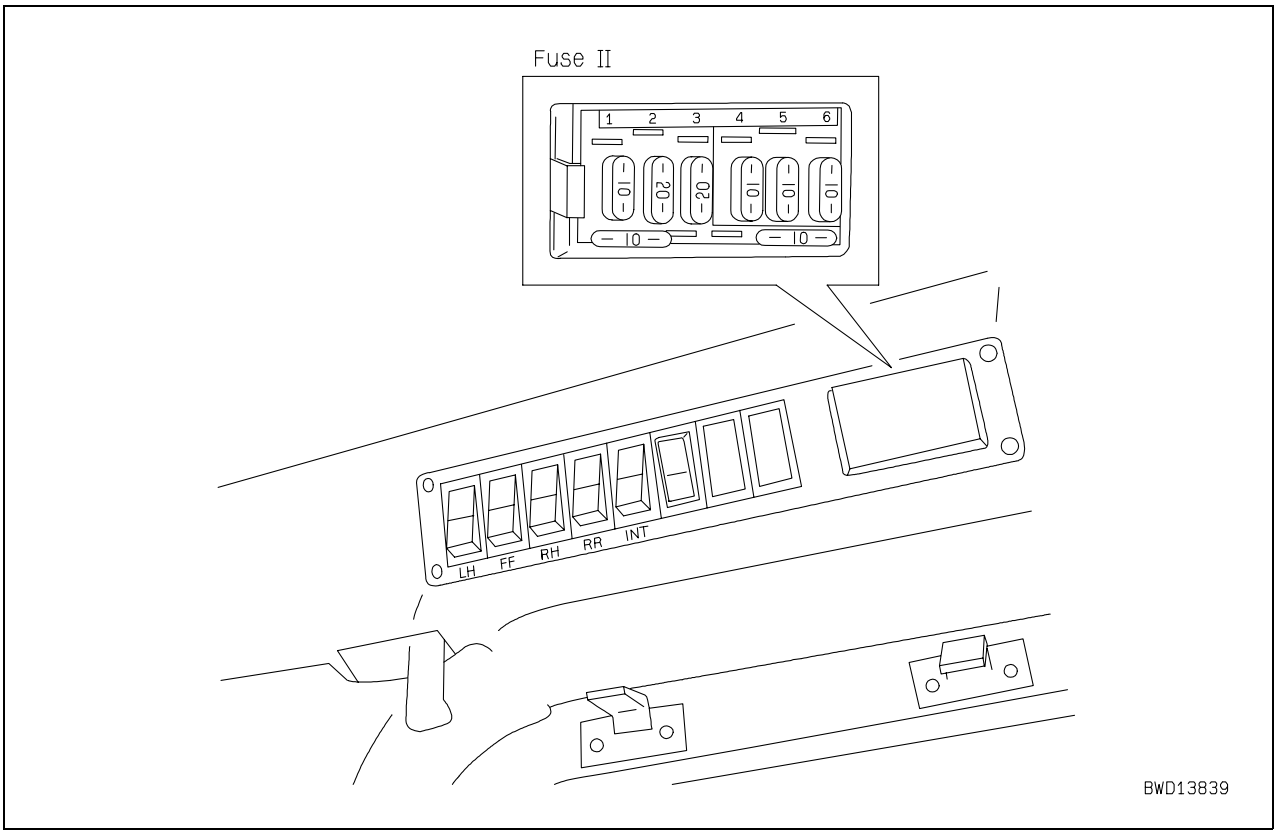

Information in troubleshooting table

★ The following information is summarized in the troubleshooting table and the related electrical circuit diagram. Before carrying out troubleshooting, understand that information fully.

Action code	Failure code	Trouble	
Display on machine monitor	**Display on machine monitor**	Trouble	**Trouble name displayed in fault history of machine monitor**
Contents of trouble	**Contents of trouble detected by machine monitor or controller**		
Action of machine monitor or controller	**Action taken by machine monitor or controller to protect system or devices when they detect trouble**		
Problem that appears on machine	**Problem that appears on machine as result of action taken by machine monitor or controller (shown above)**		
Related information	**Information related to detected trouble or troubleshooting**		

	Cause		Standard value in normal state/Remarks on troubleshooting
Possible causes and standard value in normal state	1	Possible causes of trouble (Given numbers are reference numbers, which do not indicate priority)	**<Contents of description>** **• Standard value in normal state to judge possible causes** **• Remarks on judgment** **<Troubles in wiring harness>** **• Disconnection** **Connector is connected defectively or wiring harness is broken.** **• Ground fault** **Wiring harness which is not connected to chassis ground circuit is in contact with chassis ground circuit.** **• Hot short** **Wiring harness which is not connected to power source (24 V) circuit is in contact with power source (24 V) circuit.** **• Short circuit** **Independent wiring harnesses are in contact with each other abnormally.** **<Precautions for troubleshooting>** **(1) Method of indicating connector No. and handling of T-adapter** **Insert or connect T-adapter as explained below for troubleshooting, unless otherwise specified.** **• If connector No. has no marks of "male" and "female", disconnect connector and insert T-adapters in both male side and female side.** **• If connector No. has marks of "male" and "female", disconnect connector and connect T-adapter to only male side or female side.** **(2) Entry order of pin Nos. and handling of tester leads** **Connect positive (+) lead and negative (–) lead of tester as explained below for troubleshooting, unless otherwise specified.** **• Connect positive (+) lead to pin No. or wiring harness entered on front side.** **• Connect negative (–) lead to pin No. or harness entered on rear side.**
	2		
	3		
	4		

Related circuit diagram

This drawing is a part of the electric circuit diagram related to troubleshooting.

- Connector No.: Indicates (Model – Number of pins) and (Color).
- "Connector No. and pin No." from each branching/merging point: Shows the ends of branch or source of merging within the parts of the same wiring harness.
- Arrow (↔): Roughly shows the location on the machine.

Failure code [1500L0] Transmission clutch: Abnormal

Action code	Failure code	Trouble	Transmission clutch: Abnormal (Power train controller system)
E03	**1500L0**		
Contents of trouble	• Among failure codes related to transmission clutch, 2 or more of following failure codes occurred similarly. 1) Either [**DXH4KA**] or [**DXH4KB**] 2) Either [**DXH5KA**] or [**DXH5KB**] 3) Either [**DXH6KA**] or [**DXH6KB**] • Among failure codes related to transmission clutch, following combinations of failure codes occurred similarly. 1) [**15SAL1**] and [**15SBL1**] 2) [**15SALH**] and [**15SBLH**] 3) 2 or all of [**15SEL1**], [**15SFL1**], and [**15SGL1**] 4) 2 or all of [**15SELH**], [**15SFLH**], and [**15SGLH**]		
Action of controller	• Limits operation of engine and transmission.		
Problem that appears on machine	• Auto-shift-down function does not operate. • Once machine is stopped, engine speed is limited to medium (half). • Once machine is stopped, travel is limited to specific gear speed.		
Related information	• Method of reproducing failure code: Start engine + Travel.		

Possible causes and standard value in normal state	Cause	Standard value in normal state/Remarks on troubleshooting
	If other failure codes are displayed, carry out troubleshooting for them. [**15SAL1**], [**15SALH**], [**15SBL1**], [**15SBLH**], [**15SEL1**], [**15SELH**], [**15SFL1**], [**15SFLH**], [**15SGL1**], [**15SGLH**], [**DXH4KA**], [**DXH4KB**], [**DXH5KA**], [**DXH5KB**], [**DXH6KA**], [**DXH6KB**]	

Failure code [15SAL1] Forward clutch: Fill high

Action code	Failure code	Trouble	Forward clutch: Fill high (Power train controller system)
E03	**15SAL1**		
Contents of trouble	• When output to transmission F clutch ECMV solenoid circuit is turned OFF, fill switch signal is turned ON.		
Action of controller	• Sets transmission in neutral when operator sets it in reverse position (Prevention of double engagement). • Limits operation of engine and transmission.		
Problem that appears on machine	• Once machine is stopped, engine speed is limited to medium (half). • Once machine is stopped, travel is limited to F1.		
Related information	• State of F clutch ECMV fill switch signal can be checked with monitoring function. (Code: 40906 T/M Fill Sw Input 1) • Method of reproducing failure code: Start engine + Set transmission in neutral.		

	Cause		Standard value in normal state/Remarks on troubleshooting			
Possible causes and standard value in normal state	1	Defective F clutch ECMV fill switch (Internal short circuit)	★ Prepare with starting switch OFF, then start engine and carry out troubleshooting.			
			FFT (male)	PCCS lever (Travel gear speed)	Resistance	
			Between (1) – chassis ground	N	Min. 1 MΩ	
				F1, F2, F3	Max. 1 Ω	
	2	Ground fault in wiring harness (Contact with GND circuit)	★ Prepare with starting switch OFF, then carry out troubleshooting without turning starting switch ON.			
			Wiring harness between STC2 (female) (35) – FFT (female) (1) and chassis ground		Resistance	Min. 1 MΩ
	3	Defective power train controller	★ Prepare with starting switch OFF, then start engine and carry out troubleshooting.			
			STC2	PCCS lever (Travel gear speed)	Voltage	
			Between (35) – chassis ground	N	5 – 11 V	
				F1, F2, F3	Max. 1 V	
	4	Defective hydraulic system	If causes 1 – 3 are not detected in electrical system, hydraulic system may be defective. Carry out related troubleshooting (H mode).			

Circuit diagram related to transmission F clutch ECMV

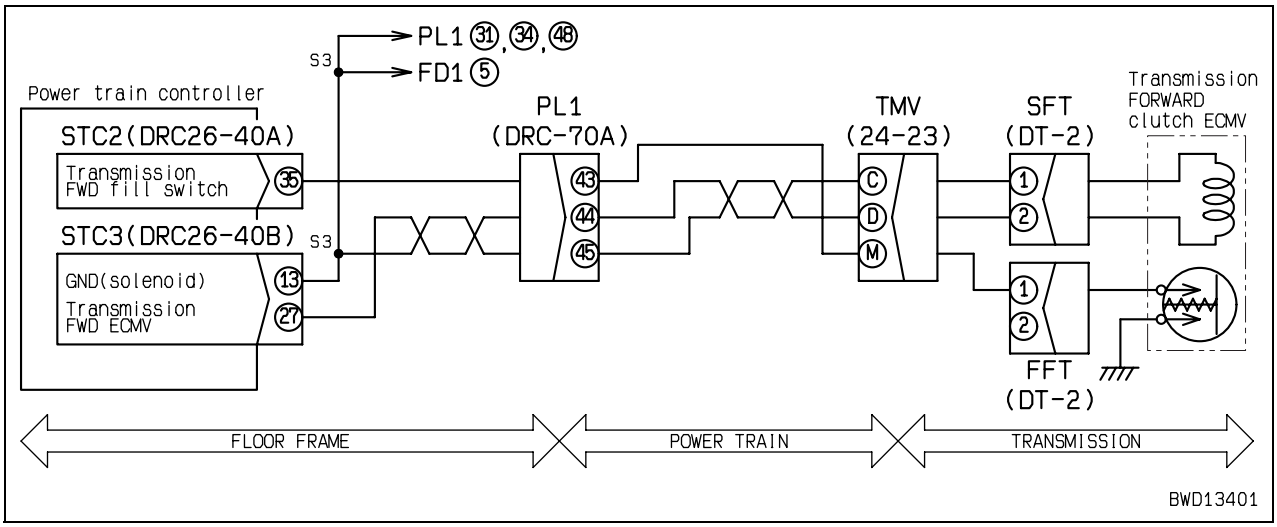

Failure code [15SALH] Forward clutch: Fill low

Action code	Failure code	Trouble	Forward clutch: Fill low (Power train controller system)
E03	**15SALH**		
Contents of trouble	• When output to transmission F clutch ECMV solenoid circuit is turned ON, fill switch signal is turned OFF.		
Action of controller	• Sets transmission in neutral when operator sets it in forward position (Prevention of double engagement). • Limits operation of engine and transmission.		
Problem that appears on machine	• Once machine is stopped, engine speed is limited to medium (half). • Once machine is stopped, travel is limited to R1.		
Related information	• State of F clutch ECMV fill switch signal can be checked with monitoring function. (Code: 40906 T/M Fill Sw Input 1) • Method of reproducing failure code: Start engine + Set transmission in forward position.		

	Cause		Standard value in normal state/Remarks on troubleshooting			
Possible causes and standard value in normal state	1	Defective F clutch ECMV fill switch (Internal disconnection)	★ Prepare with starting switch OFF, then start engine and carry out troubleshooting.			
			FFT (male)	PCCS lever (Travel gear speed)	Resistance	
			Between (1) – chassis ground	N	Min. 1 MΩ	
				F1, F2, F3	Max. 1 Ω	
	2	Disconnection in wiring harness (Disconnection in wiring or defective contact in connector)	★ Prepare with starting switch OFF, then carry out troubleshooting without turning starting switch ON.			
			Wiring harness between STC2 (female) (35) – FFT (female) (1)		Resistance	Max. 1 Ω
	3	Defective power train controller	★ Prepare with starting switch OFF, then start engine and carry out troubleshooting.			
			STC2	PCCS lever (Travel gear speed)	Voltage	
			Between (35) – chassis ground	N	5 – 11 V	
				F1, F2, F3	Max. 1 V	
	4	Defective hydraulic system	If causes 1 – 3 are not detected in electrical system, hydraulic system may be defective. Carry out related troubleshooting (H mode).			

Circuit diagram related to transmission F clutch ECMV

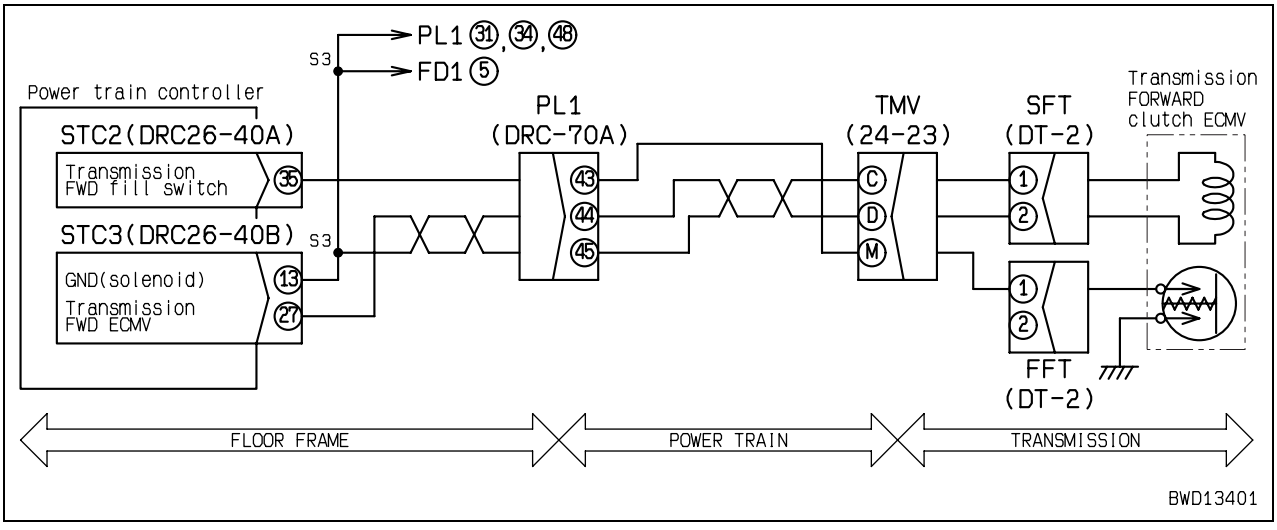

Failure code [15SBL1] Reverse clutch: Fill high

Action code	Failure code	Trouble	Reverse clutch: Fill high (Power train controller system)
E03	**15SBL1**		
Contents of trouble	• When output to transmission R clutch ECMV solenoid circuit is turned OFF, fill switch signal is turned ON.		
Action of controller	• Sets transmission in neutral when operator sets it in forward position (Prevention of double engagement). • Limits operation of engine and transmission.		
Problem that appears on machine	• Once machine is stopped, engine speed is limited to medium (half). • Once machine is stopped, travel is limited to R1.		
Related information	• State of R clutch ECMV fill switch signal can be checked with monitoring function. (Code: 40906 T/M Fill Sw Input 1) • Method of reproducing failure code: Start engine + Set transmission in neutral.		

	Cause		Standard value in normal state/Remarks on troubleshooting			
Possible causes and standard value in normal state	1	Defective R clutch ECMV fill switch (Internal short circuit)	★ Prepare with starting switch OFF, then start engine and carry out troubleshooting.			
			FRT (male)	PCCS lever (Travel gear speed)	Resistance	
			Between (1) – chassis ground	N	Min. 1 MΩ	
				R1, R2, R3	Max. 1 Ω	
	2	Ground fault in wiring harness (Contact with GND circuit)	★ Prepare with starting switch OFF, then carry out troubleshooting without turning starting switch ON.			
			Wiring harness between STC2 (female) (25) – FRT (female) (1) and chassis ground		Resistance	Min. 1 MΩ
	3	Defective power train controller	★ Prepare with starting switch OFF, then start engine and carry out troubleshooting.			
			STC2	PCCS lever (Travel gear speed)	Voltage	
			Between (25) – chassis ground	N	5 – 11 V	
				R1, R2, R3	Max. 1 V	
	4	Defective hydraulic system	If causes 1 – 3 are not detected in electrical system, hydraulic system may be defective. Carry out related troubleshooting (H mode).			

Circuit diagram related to transmission R clutch ECMV

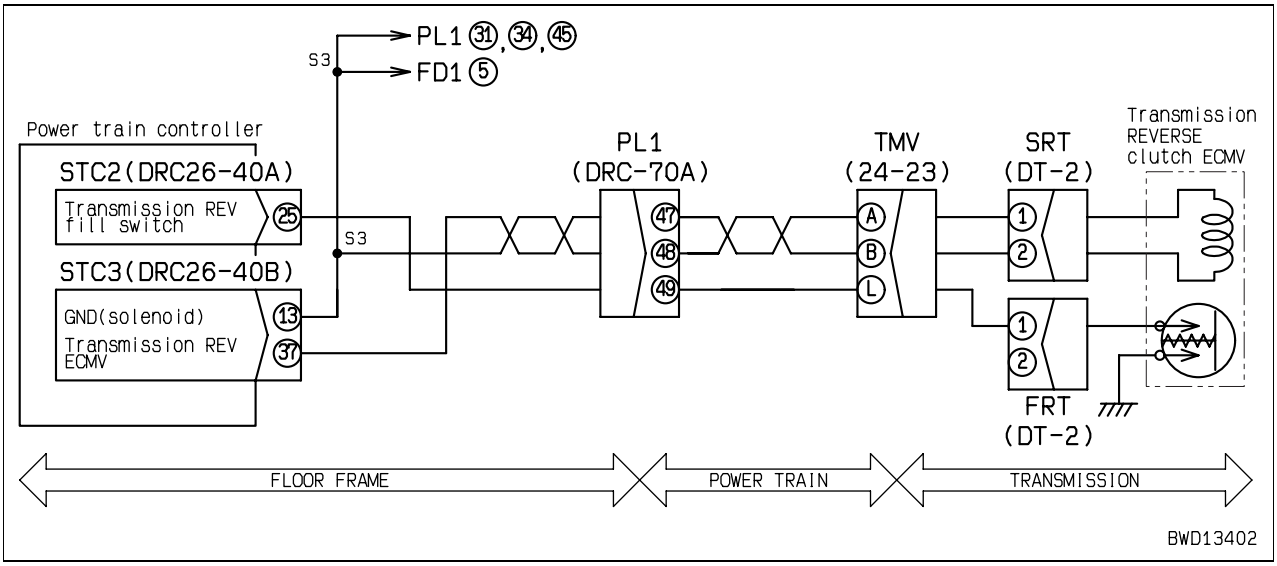

Failure code [15SBLH] Reverse clutch: Fill low

Action code	Failure code	Trouble	Reverse clutch: Fill low (Power train controller system)
E03	**15SBLH**		
Contents of trouble	• When output to transmission R clutch ECMV solenoid circuit is turned ON, fill switch signal is turned OFF.		
Action of controller	• Sets transmission in neutral when operator sets it in reverse position (Prevention of double engagement). • Limits operation of engine and transmission.		
Problem that appears on machine	• Once machine is stopped, engine speed is limited to medium (half). • Once machine is stopped, travel is limited to F1.		
Related information	• State of R clutch ECMV fill switch signal can be checked with monitoring function. (Code: 40906 T/M Fill Sw Input 1) • Method of reproducing failure code: Start engine + Set transmission in reverse position.		

	Cause		Standard value in normal state/Remarks on troubleshooting		
Possible causes and standard value in normal state	1	Defective R clutch ECMV fill switch (Internal disconnection)	★ Prepare with starting switch OFF, then start engine and carry out troubleshooting.		
			FRT (male)	PCCS lever (Travel gear speed)	Resistance
			Between (1) – chassis ground	N	Min. 1 MΩ
				R1, R2, R3	Max. 1 Ω
	2	Disconnection in wiring harness (Disconnection in wiring or defective contact in connector)	★ Prepare with starting switch OFF, then carry out troubleshooting without turning starting switch ON.		
			Wiring harness between STC2 (female) (25) – FRT (female) (1)	Resistance	Max. 1 Ω
	3	Defective power train controller	★ Prepare with starting switch OFF, then start engine and carry out troubleshooting.		
			STC2	PCCS lever (Travel gear speed)	Voltage
			Between (25) – chassis ground	N	5 – 11 V
				R1, R2, R3	Max. 1 V
	4	Defective hydraulic system	If causes 1 – 3 are not detected in electrical system, hydraulic system may be defective. Carry out related troubleshooting (H mode).		

Circuit diagram related to transmission R clutch ECMV

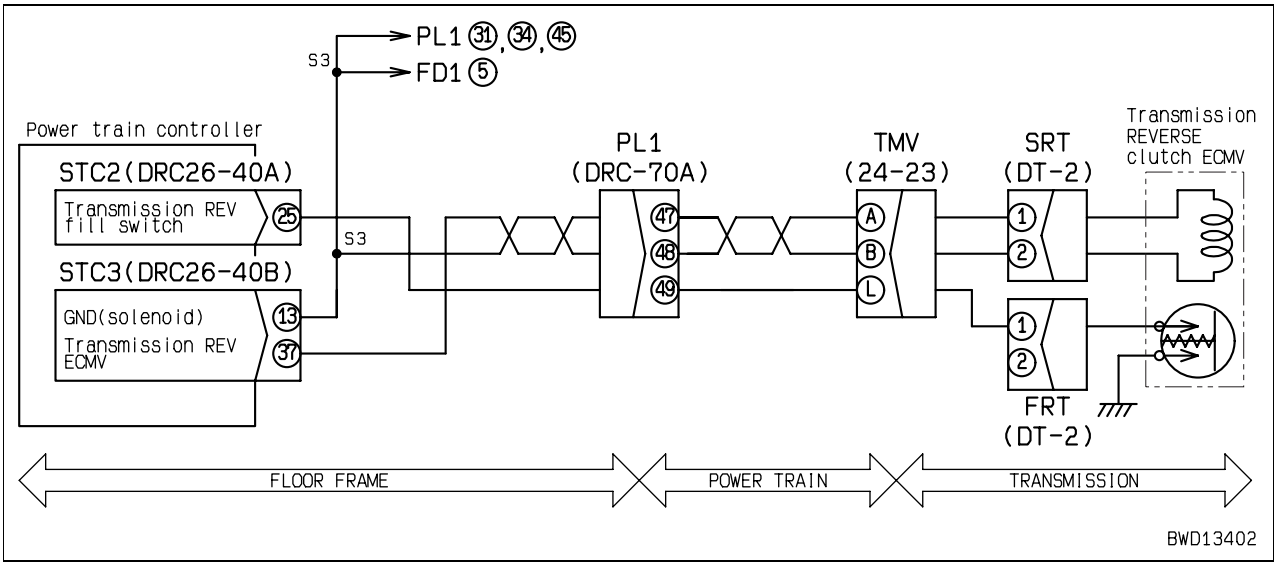

Failure code [15SEL1] Speed 1st clutch: Fill high

Action code	Failure code	Trouble	Speed 1st clutch: Fill high (Power train controller system)
E03	**15SEL1**		
Contents of trouble	• When output to transmission 1st clutch ECMV solenoid circuit is turned OFF, fill switch signal is turned ON.		
Action of controller	• Limits operation of engine and transmission.		
Problem that appears on machine	• Once machine is stopped, engine speed is limited to medium (half). • Once machine is stopped, travel is limited to F1 and R1.		
Related information	• State of 1st clutch ECMV fill switch signal can be checked with monitoring function. • (Code: 40906 T/M Fill Sw Input 1) • Method of reproducing failure code: Start engine + Set transmission in neutral.		

	Cause		Standard value in normal state/Remarks on troubleshooting			
Possible causes and standard value in normal state	1	Defective 1st clutch ECMV fill switch (Internal short circuit)	★ Prepare with starting switch OFF, then start engine, select manual gearshift mode, and carry out troubleshooting.			
			F1T (male)	PCCS lever (Travel gear speed)	Resistance	
			Between (1) – chassis ground	Other than F1, N, or R1	Min. 1 MΩ	
				F1, R1	Max. 1 Ω	
	2	Ground fault in wiring harness (Contact with GND circuit)	★ Prepare with starting switch OFF, then carry out troubleshooting without turning starting switch ON.			
			Wiring harness between STC3 (female) (19) – F1T (female) (1) and chassis ground		Resistance	Min. 1 MΩ
	3	Defective power train controller	★ Prepare with starting switch OFF, then start engine, select manual gearshift mode, and carry out troubleshooting.			
			STC3	PCCS lever (Travel gear speed)	Voltage	
			Between (19) – chassis ground	Other than F1, N, or R1	5 – 11 V	
				F1, R1	Max. 1 V	
	4	Defective hydraulic system	If causes 1 – 3 are not detected in electrical system, hydraulic system may be defective. Carry out related troubleshooting (H mode).			

Circuit diagram related to transmission 1st clutch ECMV

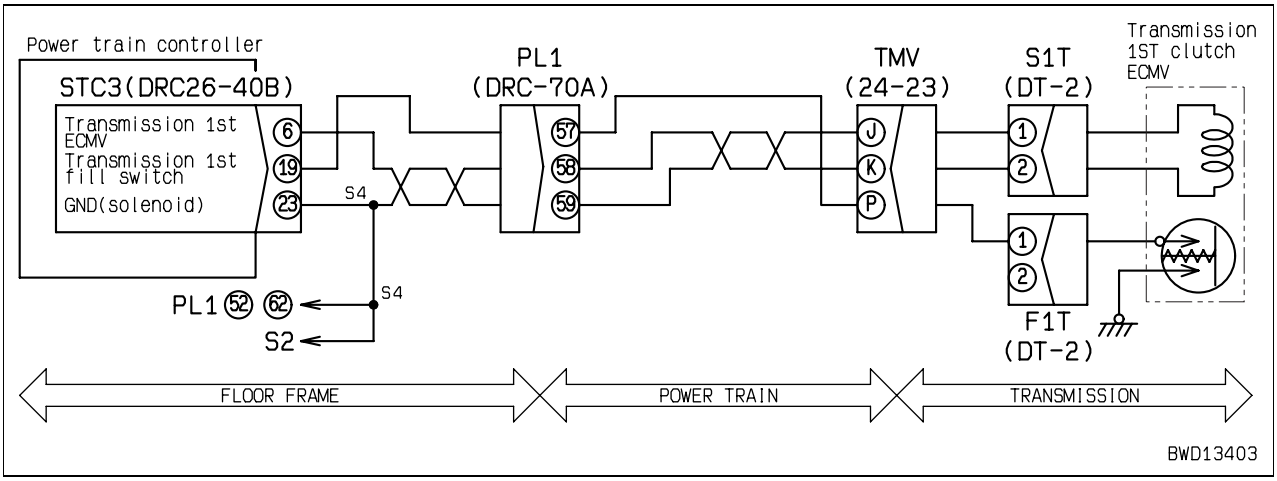

Failure code [15SELH] Speed 1st clutch: Fill low

Action code	Failure code	Trouble	Speed 1st clutch: Fill low (Power train controller system)
E03	**15SELH**		
Contents of trouble	• When output to transmission 1st clutch ECMV solenoid circuit is turned ON, fill switch signal is turned OFF.		
Action of controller	• Limits operation of engine and transmission.		
Problem that appears on machine	• Auto-shift-down function does not operate. • Once machine is stopped, engine speed is limited to medium (half). • Once machine is stopped, travel is limited to F2 and R2.		
Related information	• State of 1st clutch ECMV fill switch signal can be checked with monitoring function. (Code: 40906 T/M Fill Sw Input 1) • Method of reproducing failure code: Start engine + Set transmission in F1 or R1 position (in manual gearshift mode).		

	Cause		Standard value in normal state/Remarks on troubleshooting			
Possible causes and standard value in normal state	1	Defective 1st clutch ECMV fill switch (Internal disconnection)	★ Prepare with starting switch OFF, then start engine, select manual gearshift mode, and carry out troubleshooting.			
			F1T (male)	PCCS lever (Travel gear speed)	Resistance	
			Between (1) – chassis ground	Other than F1, N, or R1	Min. 1 MΩ	
				F1, R1	Max. 1 Ω	
	2	Disconnection in wiring harness (Disconnection in wiring or defective contact in connector)	★ Prepare with starting switch OFF, then carry out troubleshooting without turning starting switch ON.			
			Wiring harness between STC3 (female) (19) – F1T (female) (1)		Resistance	Max. 1 Ω
	3	Defective power train controller	★ Prepare with starting switch OFF, then start engine, select manual gearshift mode, and carry out troubleshooting.			
			STC3	PCCS lever (Travel gear speed)	Voltage	
			Between (19) – chassis ground	Other than F1, N, or R1	5 – 11 V	
				F1, R1	Max. 1 V	
	4	Defective hydraulic system	If causes 1 – 3 are not detected in electrical system, hydraulic system may be defective. Carry out related troubleshooting (H mode).			

Circuit diagram related to transmission 1st clutch ECMV

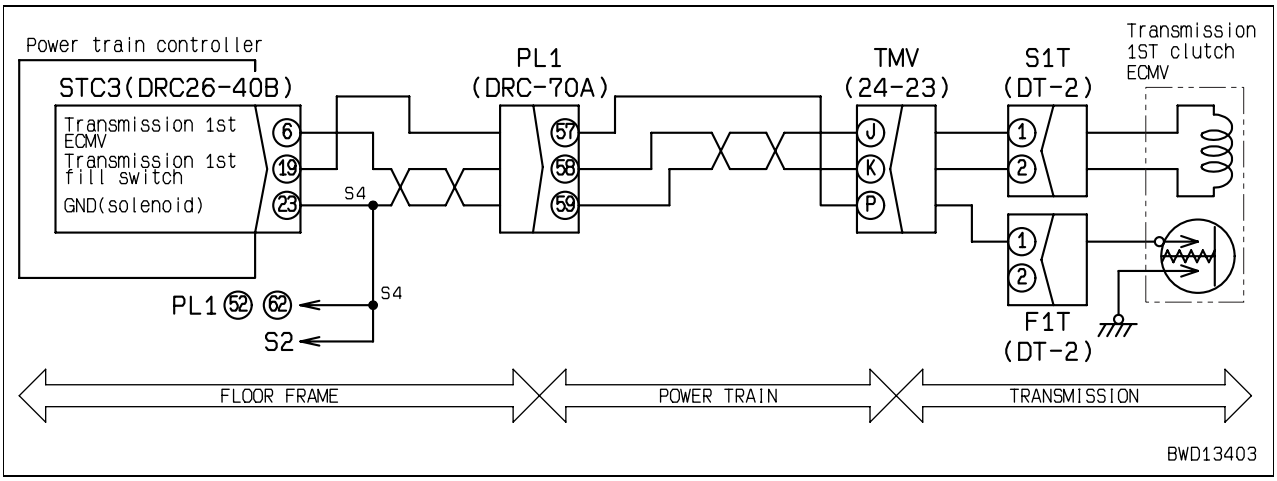

Failure code [15SFL1] Speed 2nd clutch: Fill high

Action code	Failure code	Trouble	Speed 2nd clutch: Fill high (Power train controller system)
E03	**15SFL1**		
Contents of trouble	• When output to transmission 2nd clutch ECMV solenoid circuit is turned OFF, fill switch signal is turned ON.		
Action of controller	• Limits operation of engine and transmission.		
Problem that appears on machine	• Auto-shift-down function does not operate. • Once machine is stopped, engine speed is limited to medium (half). • Once machine is stopped, travel is limited to F2 and R2.		
Related information	• State of 2nd clutch ECMV fill switch signal can be checked with monitoring function. • (Code: 40906 T/M Fill Sw Input 1) • Method of reproducing failure code: Start engine + Set transmission in neutral.		

	Cause		Standard value in normal state/Remarks on troubleshooting			
Possible causes and standard value in normal state	1	Defective 2nd clutch ECMV fill switch (Internal short circuit)	★ Prepare with starting switch OFF, then start engine, select manual gearshift mode, and carry out troubleshooting.			
			F2T (male)	PCCS lever (Travel gear speed)	Resistance	
			Between (1) – chassis ground	Other than F2, N, or R2	Min. 1 MΩ	
				F2, R2	Max. 1 Ω	
	2	Ground fault in wiring harness (Contact with GND circuit)	★ Prepare with starting switch OFF, then carry out troubleshooting without turning starting switch ON.			
			Wiring harness between STC3 (female) (29) – F2T (female) (1) and chassis ground		Resistance	Min. 1 MΩ
	3	Defective power train controller	★ Prepare with starting switch OFF, then start engine, select manual gearshift mode, and carry out troubleshooting.			
			STC3	PCCS lever (Travel gear speed)	Voltage	
			Between (29) – chassis ground	Other than F2, N, or R2	5 – 11 V	
				F2, R2	Max. 1 V	
	4	Defective hydraulic system	If causes 1 – 3 are not detected in electrical system, hydraulic system may be defective. Carry out related troubleshooting (H mode).			

Circuit diagram related to transmission 2nd clutch ECMV

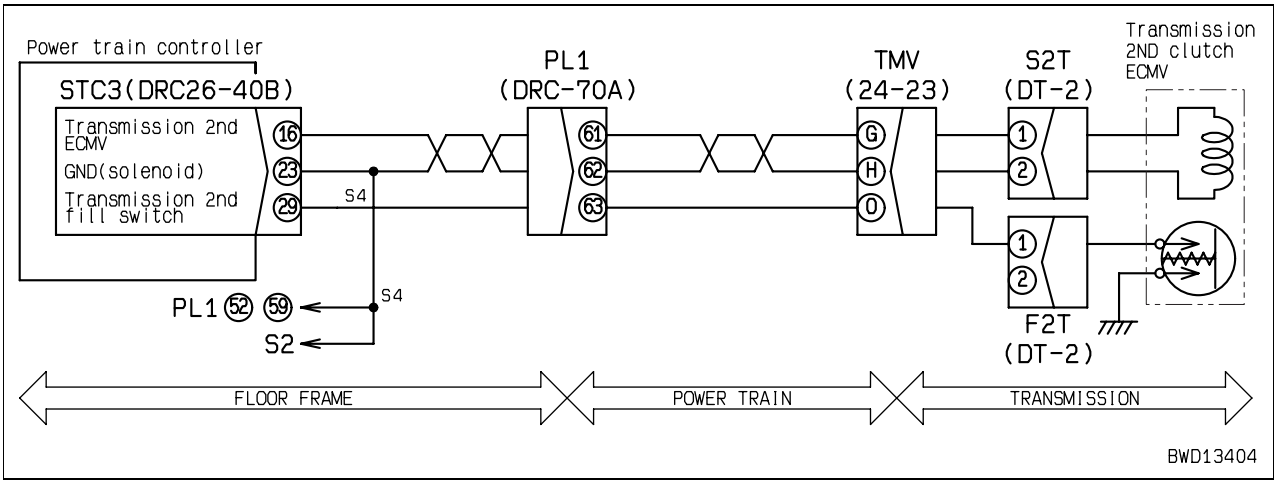

Failure code [15SFLH] Speed 2nd clutch: Fill low

Action code	Failure code	Trouble	Speed 2nd clutch: Fill low (Power train controller system)
E03	**15SFLH**		
Contents of trouble	• When output to transmission 2nd clutch ECMV solenoid circuit is turned ON, fill switch signal is turned OFF.		
Action of controller	• Limits operation of engine and transmission.		
Problem that appears on machine	• Once machine is stopped, engine speed is limited to medium (half). • Once machine is stopped, travel is limited to F1 and R1.		
Related information	• State of 2nd clutch ECMV fill switch signal can be checked with monitoring function. (Code: 40906 T/M Fill Sw Input 1) • Method of reproducing failure code: Start engine + Set transmission in F2 or R2 position (in manual gearshift mode).		

	Cause		Standard value in normal state/Remarks on troubleshooting			
Possible causes and standard value in normal state	1	Defective 2nd clutch ECMV fill switch (Internal disconnection)	★ Prepare with starting switch OFF, then start engine, select manual gearshift mode, and carry out troubleshooting.			
			F2T (male)	PCCS lever (Travel gear speed)	Resistance	
			Between (1) – chassis ground	Other than F2, N, or R2	Min. 1 MΩ	
				F2, R2	Max. 1 Ω	
	2	Disconnection in wiring harness (Disconnection in wiring or defective contact in connector)	★ Prepare with starting switch OFF, then carry out troubleshooting without turning starting switch ON.			
			Wiring harness between STC3 (female) (29) – F2T (female) (1)		Resistance	Max. 1 Ω
	3	Defective power train controller	★ Prepare with starting switch OFF, then start engine, select manual gearshift mode, and carry out troubleshooting.			
			STC3	PCCS lever (Travel gear speed)	Voltage	
			Between (29) – chassis ground	Other than F2, N, or R2	5 – 11 V	
				F2, R2	Max. 1 V	
	4	Defective hydraulic system	If causes 1 – 3 are not detected in electrical system, hydraulic system may be defective. Carry out related troubleshooting (H mode).			

Circuit diagram related to transmission 2nd clutch ECMV

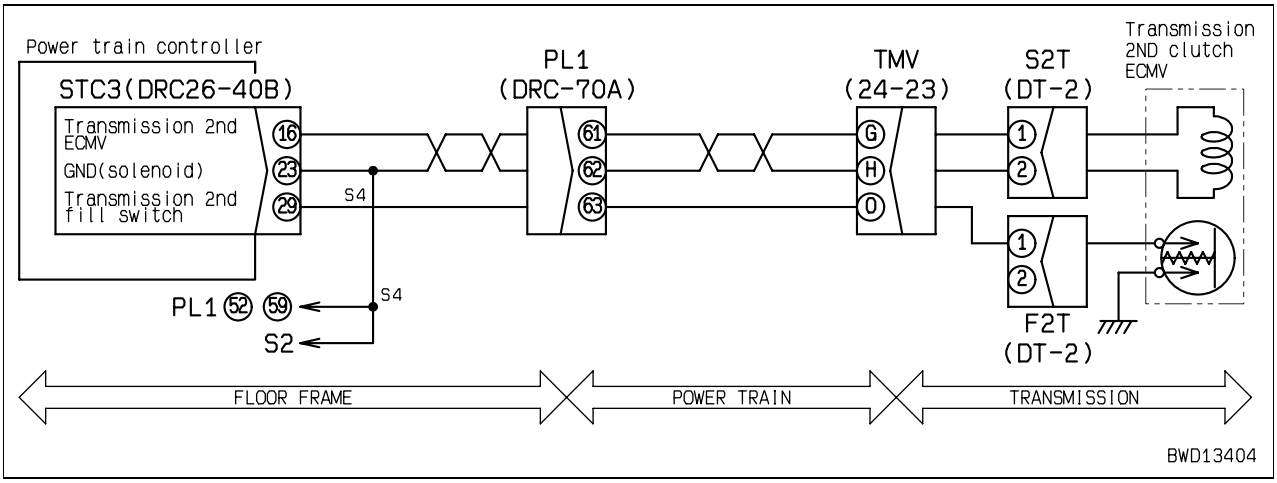

Failure code [15SGL1] Speed 3rd clutch: Fill high

Action code	Failure code	Trouble	Speed 3rd clutch: Fill high (Power train controller system)
E03	**15SGL1**		
Contents of trouble	• When output to transmission 3rd clutch ECMV solenoid circuit is turned OFF, fill switch signal is turned ON.		
Action of controller	• Limits operation of engine and transmission.		
Problem that appears on machine	• Auto-shift-down function does not operate. • Once machine is stopped, engine speed is limited to medium (half). • Once machine is stopped, travel is limited to F3 and R3.		
Related information	• State of 3rd clutch ECMV fill switch signal can be checked with monitoring function. (Code: 40906 T/M Fill Sw Input 1) • Method of reproducing failure code: Start engine + Set transmission in neutral.		

	Cause		Standard value in normal state/Remarks on troubleshooting			
Possible causes and standard value in normal state	1	Defective 3rd clutch ECMV fill switch (Internal short circuit)	★ Prepare with starting switch OFF, then start engine, select manual gearshift mode, and carry out troubleshooting.			
			F3T (male)	PCCS lever (Travel gear speed)	Resistance	
			Between (1) – chassis ground	Other than F3, N, or R3	Min. 1 MΩ	
				F3, R3	Max. 1 Ω	
	2	Ground fault in wiring harness (Contact with GND circuit)	★ Prepare with starting switch OFF, then carry out troubleshooting without turning starting switch ON.			
			Wiring harness between STC3 (female) (39) – F3T (female) (1) and chassis ground		Resistance	Min. 1 MΩ
	3	Defective power train controller	★ Prepare with starting switch OFF, then start engine, select manual gearshift mode, and carry out troubleshooting.			
			STC3	PCCS lever (Travel gear speed)	Voltage	
			Between (39) – chassis ground	Other than F3, N, or R3	5 – 11 V	
				F3, R3	Max. 1 V	
	4	Defective hydraulic system	If causes 1 – 3 are not detected in electrical system, hydraulic system may be defective. Carry out related troubleshooting (H mode).			

Circuit diagram related to transmission 3rd clutch ECMV

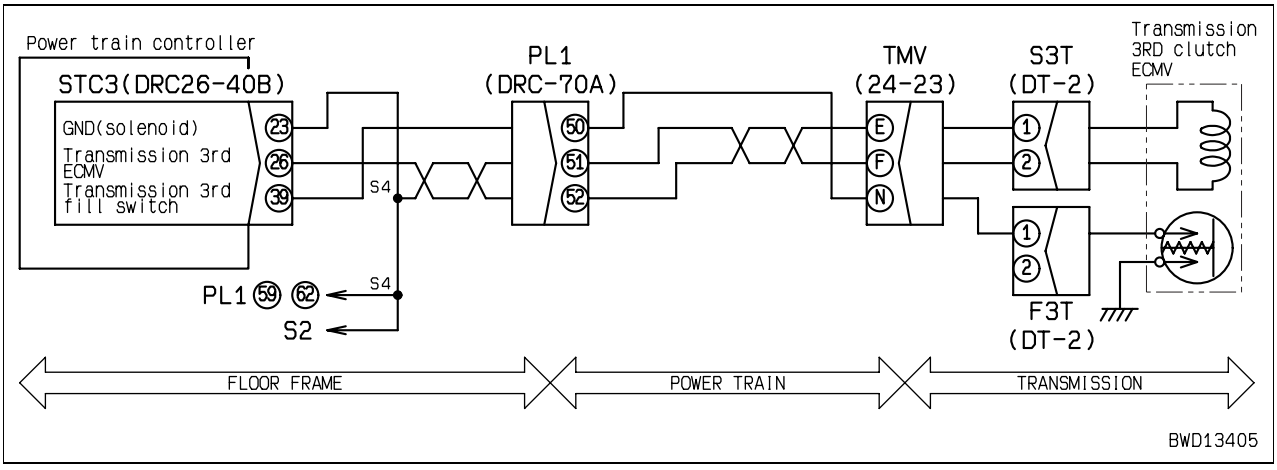

Failure code [15SGLH] Speed 3rd clutch: Fill low

Action code	Failure code	Trouble	Speed 3rd clutch: Fill low (Power train controller system)
E03	**15SGLH**		
Contents of trouble	• When output to transmission 3rd clutch ECMV solenoid circuit is turned ON, fill switch signal is turned OFF.		
Action of controller	• Limits operation of engine and transmission.		
Problem that appears on machine	• Once machine is stopped, engine speed is limited to medium (half). • Once machine is stopped, travel is limited to F1 and R1.		
Related information	• State of 3rd clutch ECMV fill switch signal can be checked with monitoring function. (Code: 40906 T/M Fill Sw Input 1) • Method of reproducing failure code: Start engine + Set transmission in F3 or R3 position (in manual gearshift mode).		

	Cause		Standard value in normal state/Remarks on troubleshooting			
Possible causes and standard value in normal state	1	Defective 3rd clutch ECMV fill switch (Internal disconnection)	★ Prepare with starting switch OFF, then start engine, select manual gearshift mode, and carry out troubleshooting.			
			F3T (male)	PCCS lever (Travel gear speed)	Resistance	
			Between (1) – chassis ground	Other than F3, N, or R3	Min. 1 MΩ	
				F3, R3	Max. 1 Ω	
	2	Disconnection in wiring harness (Disconnection in wiring or defective contact in connector)	★ Prepare with starting switch OFF, then carry out troubleshooting without turning starting switch ON.			
			Wiring harness between STC3 (female) (39) – F3T (female) (1)		Resistance	Max. 1 Ω
	3	Defective power train controller	★ Prepare with starting switch OFF, then start engine, select manual gearshift mode, and carry out troubleshooting.			
			STC3	PCCS lever (Travel gear speed)	Voltage	
			Between (39) – chassis ground	Other than F3, N, or R3	5 – 11 V	
				F3, R3	Max. 1 V	
	4	Defective hydraulic system	If causes 1 - 3 are not detected in electrical system, hydraulic system may be defective. Carry out related troubleshooting (H mode).			

Circuit diagram related to transmission 3rd clutch ECMV

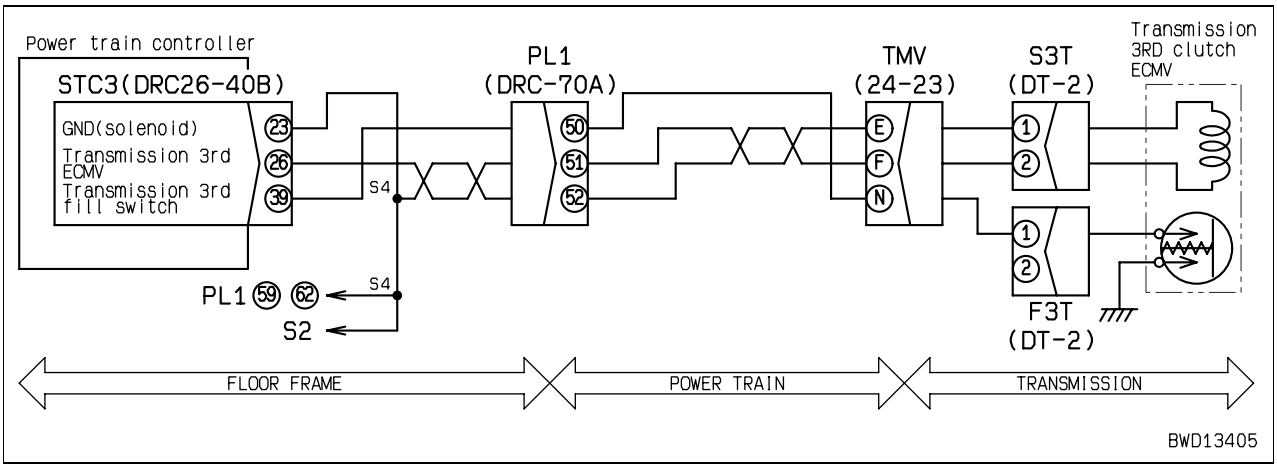

Failure code [15SJL1] L/U: Fill high

Action code	Failure code	Trouble	L/U: Fill high (Power train controller system)
E02	**15SJL1**		
Contents of trouble	• When output to torque converter lockup clutch ECMV solenoid circuit is turned OFF, fill switch signal is turned ON.		
Action of controller	• None in particular.		
Problem that appears on machine	• Engine may stall during travel.		
Related information	• State of lockup clutch ECMV fill switch signal can be checked with monitoring function. (Code: 31520 T/M Fill Sw Input 2) • Method of reproducing failure code: Start engine + Set transmission in forward position (in automatic gearshift mode).		

	Cause		Standard value in normal state/Remarks on troubleshooting			
Possible causes and standard value in normal state	1	Defective lockup clutch ECMV fill switch (Internal short circuit)	★ Prepare with starting switch OFF, then start engine, select automatic gearshift mode, and carry out troubleshooting.			
			FLUC (male)	PCCS lever (Travel gear speed)	Resistance	
			Between (1) – chassis ground	N	Min. 1 MΩ	
				Locked up at F1, F2, or F3	Max. 1 Ω	
	2	Ground fault in wiring harness (Contact with GND circuit)	★ Prepare with starting switch OFF, then carry out troubleshooting without turning starting switch ON.			
			Wiring harness between STC2 (female) (36) – FLUC (female) (1) and chassis ground		Resistance	Min. 1 MΩ
	3	Defective power train controller	★ Prepare with starting switch OFF, then start engine, select automatic gearshift mode, and carry out troubleshooting.			
			STC2	PCCS lever (Travel gear speed)	Voltage	
			Between (36) – chassis ground	N	5 – 11 V	
				Locked up at F1, F2, or F3	Max. 1 V	
	4	Defective hydraulic system	If causes 1 – 3 are not detected in electrical system, hydraulic system may be defective. Carry out related troubleshooting (H mode).			

Circuit diagram related to torque converter lockup clutch ECMV

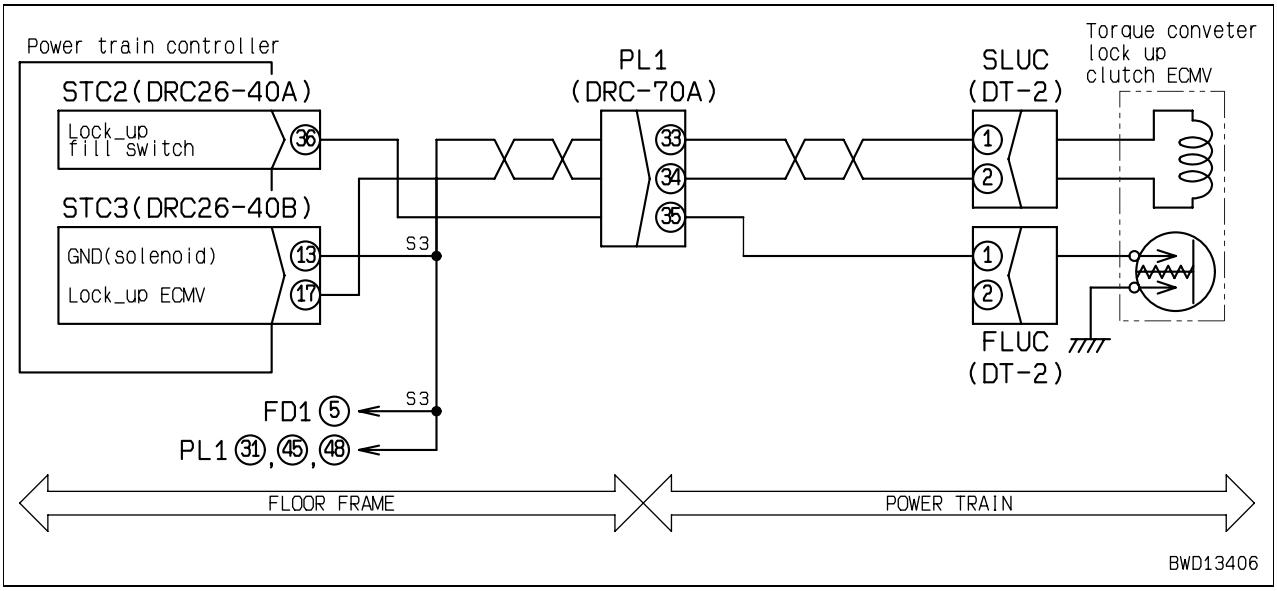

Failure code [15SJLH] L/U: Fill low

Action code	Failure code	Trouble	L/U: Fill low (Power train controller system)
E02	**15SJLH**		
Contents of trouble	• When output to torque converter lockup clutch ECMV solenoid circuit is turned ON, fill switch signal is turned OFF.		
Action of controller	• None in particular.		
Problem that appears on machine	• Engine may stall during travel.		
Related information	• State of lockup clutch ECMV fill switch signal can be checked with monitoring function. (Code: 31520 T/M Fill Sw Input 2) • Method of reproducing failure code: Start engine + Set transmission in forward position (in automatic gearshift mode).		

	Cause		Standard value in normal state/Remarks on troubleshooting			
Possible causes and standard value in normal state	1	Defective lockup clutch ECMV fill switch (Internal disconnection)	★ Prepare with starting switch OFF, then start engine, select automatic gearshift mode, and carry out troubleshooting.			
			FLUC (male)	PCCS lever (Travel gear speed)	Resistance	
			Between (1) – chassis ground	N	Min. 1 MΩ	
				Locked up at F1, F2, or F3	Max. 1 Ω	
	2	Disconnection in wiring harness (Disconnection in wiring or defective contact in connector)	★ Prepare with starting switch OFF, then carry out troubleshooting without turning starting switch ON.			
			Wiring harness between STC2 (female) (36) – FLUC (female) (1)		Resistance	Max. 1 Ω
	3	Defective power train controller	★ Prepare with starting switch OFF, then start engine, select automatic gearshift mode, and carry out troubleshooting.			
			STC2	PCCS lever (Travel gear speed)	Voltage	
			Between (36) – chassis ground	N	5 – 11 V	
				Locked up at F1, F2, or F3	Max. 1 V	
	4	Defective hydraulic system	If causes 1 – 3 are not detected in electrical system, hydraulic system may be defective. Carry out related troubleshooting (H mode).			

Circuit diagram related to torque converter lockup clutch ECMV

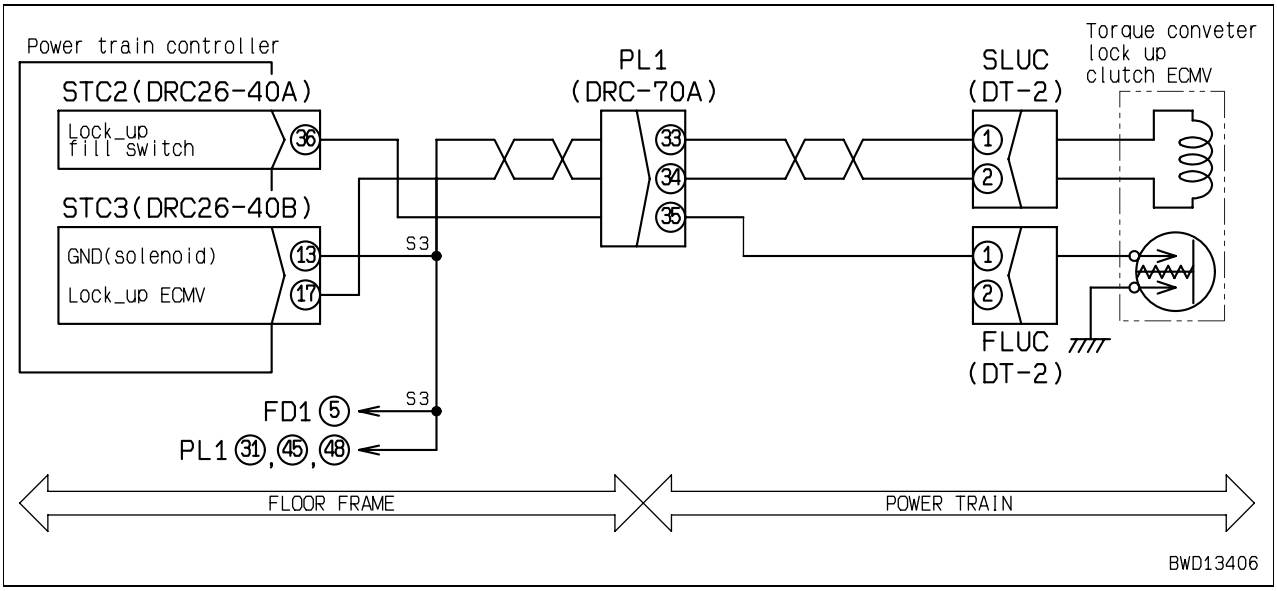

Failure code [2301L1] Right brake: Fill high

Action code	Failure code	Trouble	Right brake: Fill high (Power train controller system)
E04	**2301L1**		
Contents of trouble	• When output to steering case right brake ECMV solenoid circuit is turned OFF, fill switch signal is turned ON.		
Action of controller	• Limits operation of engine, transmission, and brake.		
Problem that appears on machine	• Applies brake lightly during travel. • Once machine is stopped, engine speed is limited to medium (half). • Once machine is stopped, machine cannot travel at all.		
Related information	• State of right brake ECMV fill switch signal can be checked with monitoring function. (Code: 31521 S/T Fill Sw Input) • Method of reproducing failure code: Start engine + Operate parking brake lever (Free) + Operate brake pedal (Press).		

	Cause		Standard value in normal state/Remarks on troubleshooting			
Possible causes and standard value in normal state	1	Defective right brake ECMV fill switch (Internal short circuit)	★ Prepare with starting switch OFF, then start engine, set parking brake lever in Free position, and carry out troubleshooting.			
			FBRR (male)	Brake pedal	Resistance	
			Between (1) – chassis ground	Released	Max. 1 Ω	
				Pressed	Min. 1 MΩ	
	2	Ground fault in wiring harness (Contact with GND circuit)	★ Prepare with starting switch OFF, then carry out troubleshooting without turning starting switch ON.			
			Wiring harness between STC2 (female) (38) – FBRR (female) (1) and chassis ground		Resistance	Min. 1 MΩ
	3	Defective power train controller	★ Prepare with starting switch OFF, then start engine, set parking brake lever in Free position, and carry out troubleshooting.			
			STC2	Brake pedal	Voltage	
			Between (38) – chassis ground	Released	Max. 1 V	
				Pressed	5 – 11V	
	4	Defective hydraulic system	If causes 1 – 3 are not detected in electrical system, hydraulic system may be defective. Carry out related troubleshooting (H mode).			

Circuit diagram related to steering case right brake ECMV

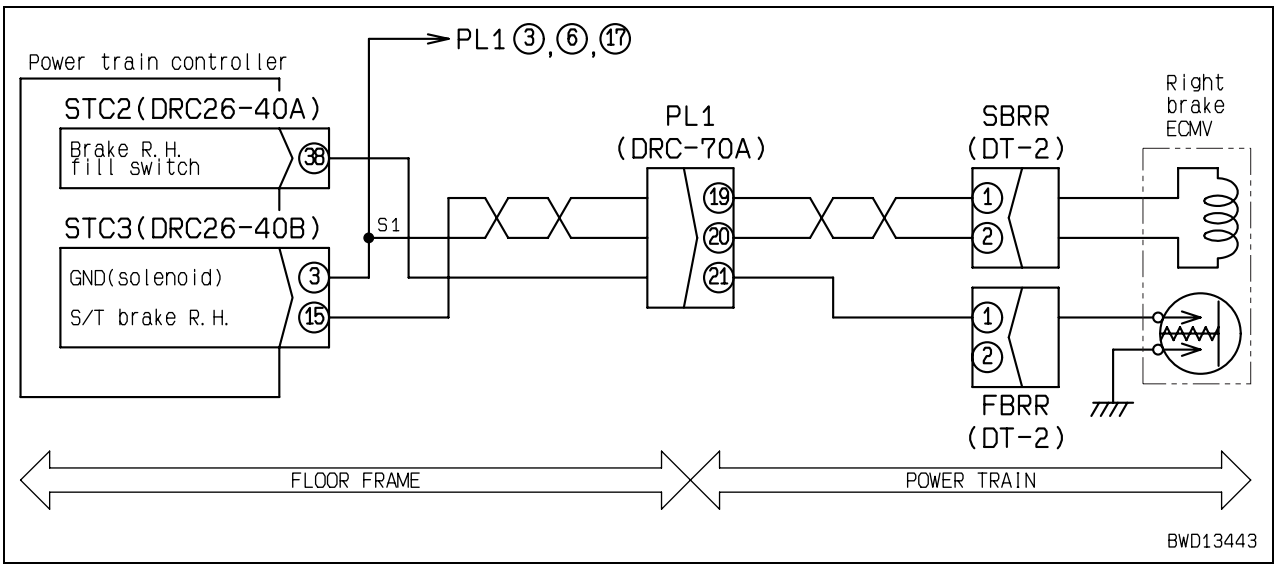

Failure code [2301LH] Right brake: Fill low

Action code	Failure code	Trouble	Right brake: Fill low (Power train controller system)
E04	**2301LH**		
Contents of trouble	• When output to steering case right brake ECMV solenoid circuit is turned ON, fill switch signal is turned OFF.		
Action of controller	• Limits operation of engine, transmission, and brake.		
Problem that appears on machine	• Applies brake lightly during travel. • Once machine is stopped, engine speed is limited to medium (half). • Once machine is stopped, machine cannot travel at all.		
Related information	• State of right brake ECMV fill switch signal can be checked with monitoring function. (Code: 31521 S/T Fill Sw Input) • Method of reproducing failure code: Start engine + Operate parking brake lever (Free) + Operate brake pedal (Press).		

	Cause		Standard value in normal state/Remarks on troubleshooting			
Possible causes and standard value in normal state	1	Defective right brake ECMV fill switch (Internal short circuit)	★ Prepare with starting switch OFF, then start engine, set parking brake lever in Free position, and carry out troubleshooting.			
			FBRR (male)	Brake pedal	Resistance	
			Between (1) – chassis ground	Released	Max. 1 Ω	
				Pressed	Min. 1 MΩ	
	2	Disconnection in wiring harness (Disconnection in wiring or defective contact in connector)	★ Prepare with starting switch OFF, then carry out troubleshooting without turning starting switch ON.			
			Wiring harness between STC2 (female) (38) – FBRR (female) (1)		Resistance	Max. 1 Ω
	3	Defective power train controller	★ Prepare with starting switch OFF, then start engine, set parking brake lever in Free position, and carry out troubleshooting.			
			STC2	Brake pedal	Voltage	
			Between (38) – chassis ground	Released	Max. 1 V	
				Pressed	5 – 11 V	
	4	Defective hydraulic system	If causes 1 – 3 are not detected in electrical system, hydraulic system may be defective. Carry out related troubleshooting (H mode).			

Circuit diagram related to steering case right brake ECMV

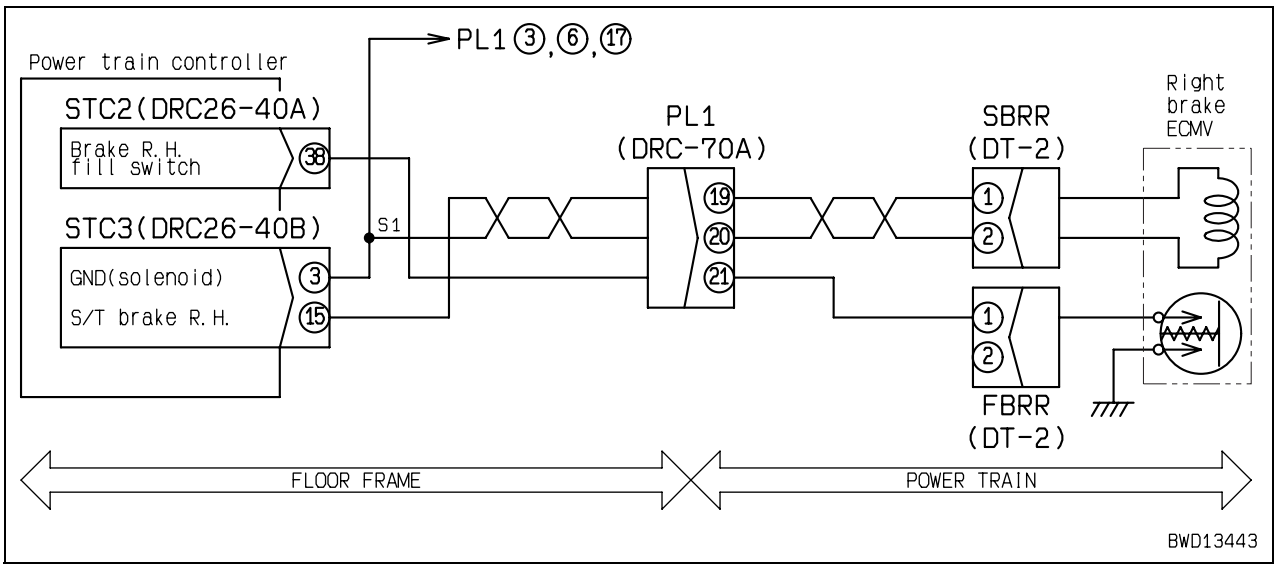

Failure code [2302L1] Left brake: Fill high

Action code	Failure code	Trouble	Left brake: Fill high (Power train controller system)
E04	**2302L1**		
Contents of trouble	• When output to steering case left brake ECMV solenoid circuit is turned OFF, fill switch signal is turned ON.		
Action of controller	• Limits operation of engine, transmission, and brake.		
Problem that appears on machine	• Applies brake lightly during travel. • Once machine is stopped, engine speed is limited to medium (half). • Once machine is stopped, machine cannot travel at all.		
Related information	• State of left brake ECMV fill switch signal can be checked with monitoring function. (Code: 31521 S/T Fill Sw Input) • Method of reproducing failure code: Start engine + Operate parking brake lever (Free) + Operate brake pedal (Press).		

	Cause		Standard value in normal state/Remarks on troubleshooting			
Possible causes and standard value in normal state	1	Defective left brake ECMV fill switch (Internal short circuit)	★ Prepare with starting switch OFF, then start engine, set parking brake lever in Free position, and carry out troubleshooting.			
			FBRL (male)	Brake pedal	Resistance	
			Between (1) – chassis ground	Released	Max. 1 Ω	
				Pressed	Min. 1 MΩ	
	2	Ground fault in wiring harness (Contact with GND circuit)	★ Prepare with starting switch OFF, then carry out troubleshooting without turning starting switch ON.			
			Wiring harness between STC2 (female) (2) – FBRL (female) (1) and chassis ground		Resistance	Min. 1 MΩ
	3	Defective power train controller	★ Prepare with starting switch OFF, then start engine, set parking brake lever in Free position, and carry out troubleshooting.			
			STC2	Brake pedal	Voltage	
			Between (2) – chassis ground	Released	Max. 1 V	
				Pressed	5 – 11 V	
	4	Defective hydraulic system	If causes 1 – 3 are not detected in electrical system, hydraulic system may be defective. Carry out related troubleshooting (H mode).			

Circuit diagram related to steering case left brake ECMV

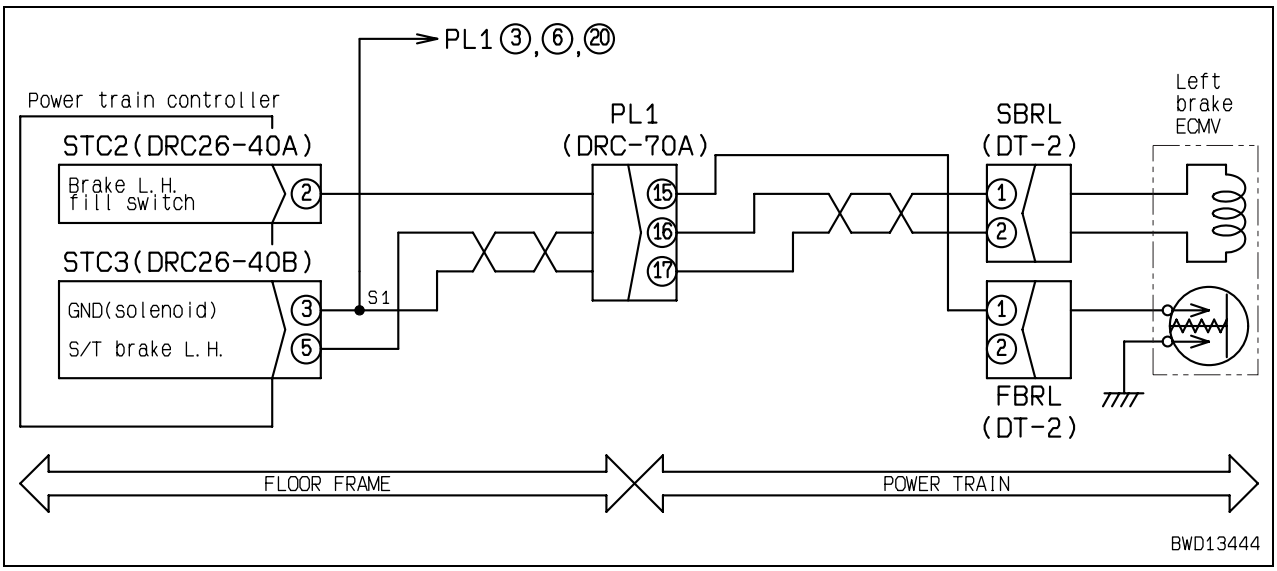

Failure code [2302LH] Left brake: Fill low

Action code	Failure code	Trouble	Left brake: Fill low (Power train controller system)
E04	**2302LH**		
Contents of trouble	• When output to steering case left brake ECMV solenoid circuit is turned ON, fill switch signal is turned OFF.		
Action of controller	• Limits operation of engine, transmission, and brake.		
Problem that appears on machine	• Applies brake lightly during travel. • Once machine is stopped, engine speed is limited to medium (half). • Once machine is stopped, machine cannot travel at all.		
Related information	• State of left brake ECMV fill switch signal can be checked with monitoring function. (Code: 31521 S/T Fill Sw Input) • Method of reproducing failure code: Start engine + Operate parking brake lever (Free) + Operate brake pedal (Press).		

	Cause		Standard value in normal state/Remarks on troubleshooting			
Possible causes and standard value in normal state	1	Defective left brake ECMV fill switch (Internal short circuit)	★ Prepare with starting switch OFF, then start engine, set parking brake lever in Free position, and carry out troubleshooting.			
			FBRL (male)	Brake pedal	Resistance	
			Between (1) – chassis ground	Released	Max. 1 Ω	
				Pressed	Min. 1 MΩ	
	2	Disconnection in wiring harness (Disconnection in wiring or defective contact in connector)	★ Prepare with starting switch OFF, then carry out troubleshooting without turning starting switch ON.			
			Wiring harness between STC2 (female) (2) – FBRL (female) (1)		Resistance	Max. 1 Ω
	3	Defective power train controller	★ Prepare with starting switch OFF, then start engine, set parking brake lever in Free position, and carry out troubleshooting.			
			STC2	Brake pedal	Voltage	
			Between (2) – chassis ground	Released	Max. 1 V	
				Pressed	5 – 11 V	
	4	Defective hydraulic system	If causes 1 – 3 are not detected in electrical system, hydraulic system may be defective. Carry out related troubleshooting (H mode).			

Circuit diagram related to steering case left brake ECMV

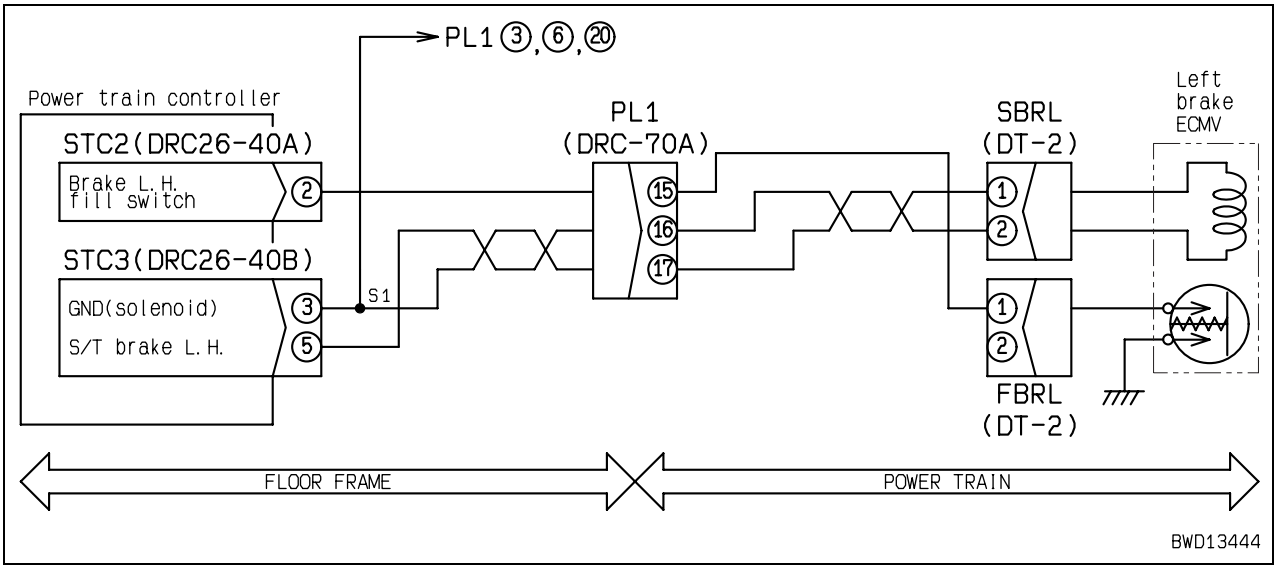

Failure code [7RFAKA] ECM HOLD RELAY: Disconnection

Action code	Failure code	Trouble	ECM HOLD RELAY: Disconnection (Power train controller system)
—	**7RFAKA**		
Contents of trouble	• When ground circuit of engine cut relay circuit is disconnected to turn output ON, no current flows.		
Action of controller	• None in particular.		
Problem that appears on machine	• When engine cut mechanism is installed, engine cannot be cut (stopped).		
Related information	• State of engine cut relay circuit signal can be checked with monitoring function. (Code: 40912 P/T Sw Input) • Method of reproducing failure code: Start engine. • This failure code detects abnormality on primary side (coil side) of engine cut relay but does not detect abnormality on secondary side (contact side).		

	Cause		Standard value in normal state/Remarks on troubleshooting		
Possible causes and standard value in normal state	1	Defective engine cut relay (Internal disconnection)	★ Prepare with starting switch OFF, then carry out troubleshooting without turning starting switch ON.		
			ACT (male)	Resistance	
			Between (1) – (2)	200 – 400 Ω	
	2	Disconnection in wiring harness (Disconnection in wiring or defective contact in connector)	★ Prepare with starting switch OFF, then carry out troubleshooting without turning starting switch ON.		
			Wiring harness between STC2 (female) (19) – ACT (female) (2)	Resistance	Max. 1 Ω
			Wiring harness between ACT (female) (1) – terminal 270.	Resistance	Max. 1 Ω
	3	Short circuit in wiring harness (Contact with GND circuit)	★ Prepare with starting switch OFF, then carry out troubleshooting without turning starting switch ON.		
			Wiring harness between STC2 (female) (19) – ACT (female) (2) and chassis ground	Resistance	Min. 1 MΩ
			Wiring harness between ACT (female) (1), (3) – terminal 270, circuit branch end and chassis ground.	Resistance	Min. 1 MΩ
	4	Defective power train controller	★ Prepare with starting switch OFF, then turn starting switch ON and carry out troubleshooting.		
			STC2	Voltage	
			Between (19) – chassis ground	20 – 30 V	

Circuit diagram related to engine cut relay

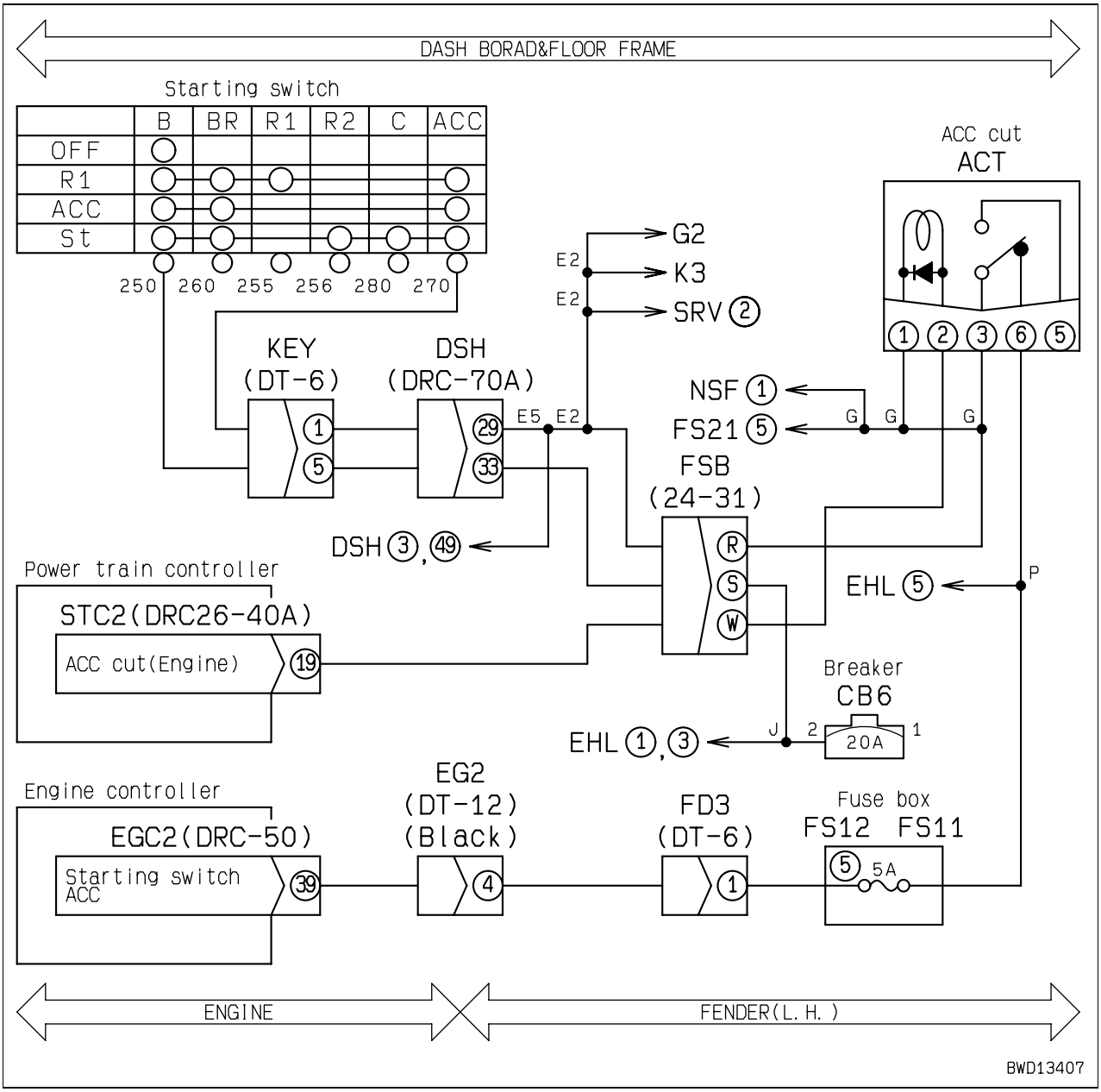

Failure code [AA10NX] Air Cleaner Clogging

Action code	Failure code	Trouble	Air Cleaner Clogging (Machine monitor system)
—	AA10NX		
Contents of trouble	• While engine was running, air cleaner clogging switch signal circuit detected clogging of air cleaner (opening of sensor contact).		
Action of machine monitor	• None in particular.		
Problem that appears on machine	• If machine is used as it is, engine may be damaged.		
Related information	• Method of reproducing failure code: Start engine.		

	Cause		Standard value in normal state/Remarks on troubleshooting			
Possible causes and standard value in normal state	1	Clogged air cleaner (When system is normal)	★ Air cleaner may be clogged. Check and clean or replace it.			
	2	Defective air cleaner clogging switch (Internal disconnection)	★ Prepare with starting switch OFF, then start engine and carry out troubleshooting.			
			AF1 (male)	Air cleaner	Resistance	
			Between (1) – (2)	Normal (Intake air resistance: *1)	Max. 1 Ω	
				Clogged (Intake air resistance: *2)	Min. 1 MΩ	
	3	Disconnection in wiring harness (Disconnection in wiring or defective contact in connector)	★ Prepare with starting switch OFF, then carry out troubleshooting without turning starting switch ON.			
			Wiring harness between CM02 (female) (4) – AF1 (female) (1)		Resistance	Max. 1 Ω
			Wiring harness between CM01 (female) (7), CM02 (female) (7) – AF1 (female) (2)		Resistance	Max. 1 Ω
	4	Defective power train controller	★ Prepare with starting switch OFF, then start engine and carry out troubleshooting.			
			CM02	Air cleaner	Voltage	
			Between (4) – (7)	Normal (Intake air resistance: *1)	Max. 1 V	
				Clogged (Intake air resistance: *2)	20 – 30 V	

*1: Max. -3,430 Pa {-350 mmH2O}
*2: -7,470 ± 490Pa {-762 ± 50 mmH2O}

Circuit diagram related to air cleaner clogging switch

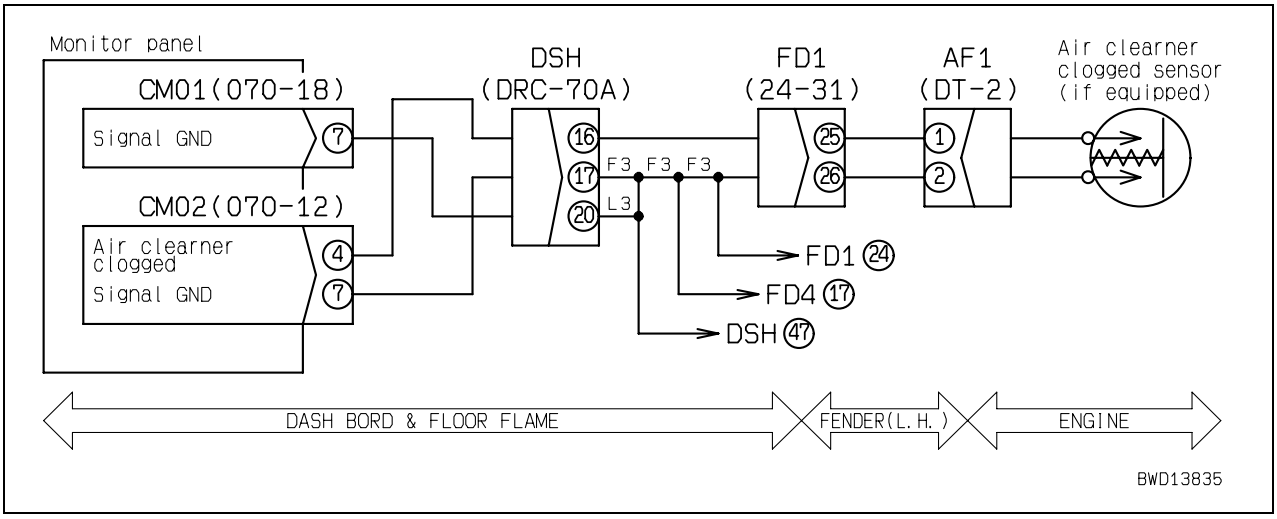

Failure code [AB00MA] Battery Charge Abnormal

Action code	Failure code	Trouble	Battery Charge Abnormal (Machine monitor system)
—	**AB00MA**		
Contents of trouble	• While engine was running, alternator signal circuit detected that battery charge voltage was low.		
Action of machine monitor	• Displays charge level monitor red on machine monitor.		
Problem that appears on machine	• If machine is used as it is, battery may not be charged.		
Related information	• Battery voltage can be checked with monitoring function. (Code: 03203 Battery Power Supply) • Method of reproducing failure code: Start engine.		

	Cause		Standard value in normal state/Remarks on troubleshooting		
Possible causes and standard value in normal state	1	Defective charge by alternator (When system is normal)	★ Prepare with starting switch OFF, then start engine and carry out troubleshooting.		
			CM01	Engine	Voltage
			Between (11) – chassis ground	Above medium speed	27.5 – 29.5 V
	2	Defective charge level monitor system	If cause 1 is not detected, charge level monitor system may be defective. Carry out "E-5 Caution item lights up while engine is running" in E mode.		

Circuit diagram related to preheating/starting/charging of engine

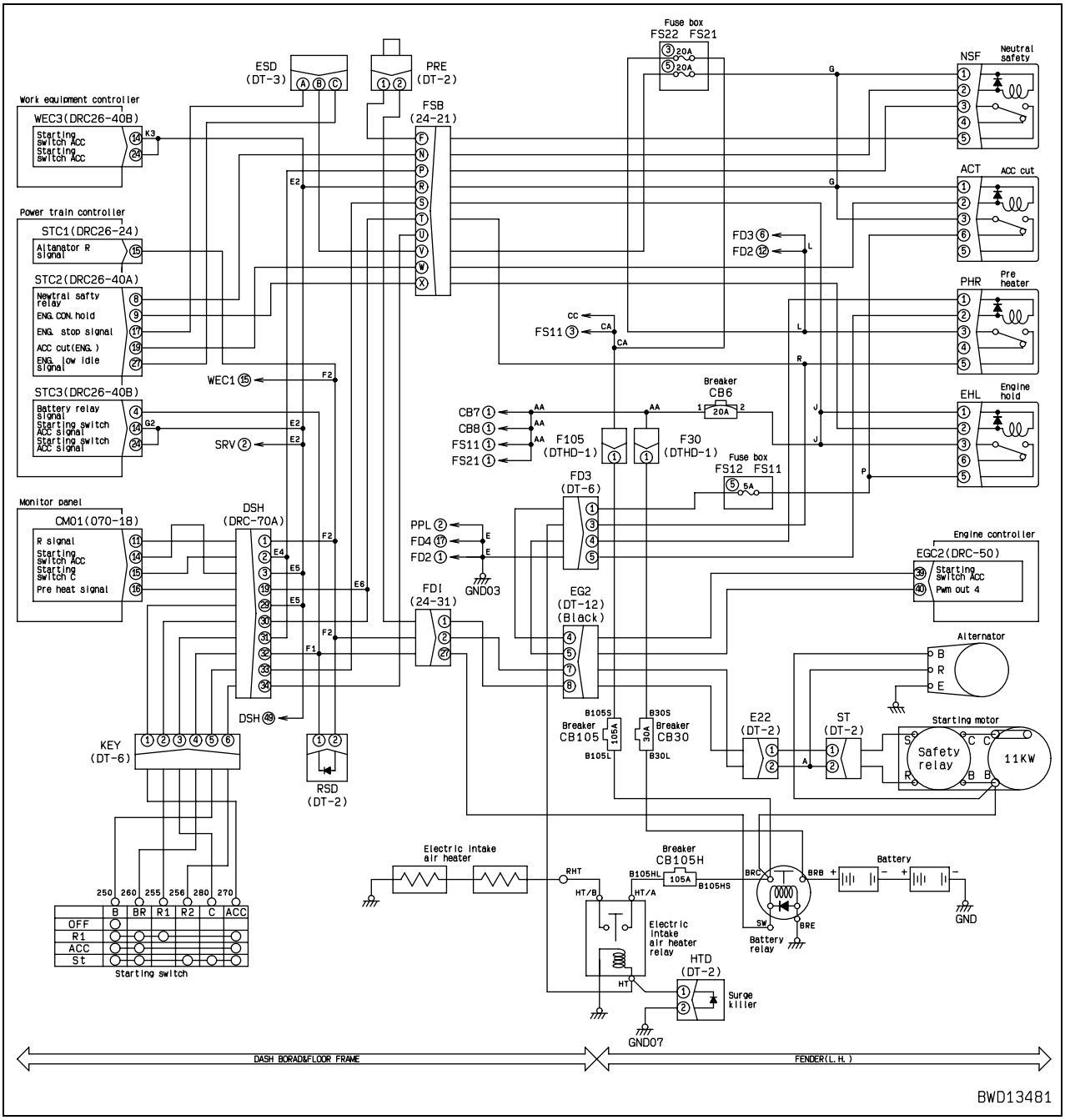

Failure code [B@BAZG] Eng Oil Press Low

Action code	Failure code	Trouble	Eng Oil Press Low (Engine controller system)
—	**B@BAZG**		
Contents of trouble	• While engine was running, engine oil pressure sensor signal circuit detected that engine oil pressure was abnormally low.		
Action of controller	• Displays engine oil pressure monitor red on machine monitor.		
Problem that appears on machine	• If machine is used as it is, engine may be seized.		
Related information	• Engine oil pressure sensor signal is input to engine controller and then transmitted to machine monitor through communication system. • Engine oil pressure can be checked with monitoring function. (Code: 37200 Engine Oil Pressure) • Method of reproducing failure code: Start engine.		

	Cause		Standard value in normal state/Remarks on troubleshooting
Possible causes and standard value in normal state	1	Low engine oil pressure (When system is normal)	Check engine oil pressure. If it is low, remove cause.
	2	Defective engine oil pressure sensor system	If cause 1 is not detected, engine oil pressure sensor may be defective. Carry out troubleshooting for failure codes [CA135] and [CA141].

Failure code [B@BCNS] Eng Water Overheat

Action code	Failure code	Trouble	Eng Water Overheat (Engine controller system)
—	**B@BCNS**		
Contents of trouble	• While engine was running, engine coolant temperature sensor signal circuit detected that engine coolant was overheated.		
Action of controller	• Displays engine coolant temperature monitor red on machine monitor.		
Problem that appears on machine	• If machine is used as it is, engine may be seized.		
Related information	• Engine coolant temperature sensor signal is input to engine controller and then transmitted to machine monitor through communication system. • Engine coolant temperature can be checked with monitoring function. (Code: 04107 Coolant Temperature) • Method of reproducing failure code: Start engine.		

	Cause		Standard value in normal state/Remarks on troubleshooting
Possible causes and standard value in normal state	1	Overheated engine coolant (When system is normal)	Check engine coolant for overheating. If it is overheated, remove cause.
	2	Defective engine coolant temperature sensor system	If cause 1 is not detected, engine coolant temperature sensor may be defective. Carry out troubleshooting for failure codes [CA144] and [CA145].

Failure code [B@BCZK] Eng Water Level Low

Action code	Failure code	Trouble	Eng Water Level Low (Machine controller system)
—	**B@BCZK**		
Contents of trouble	• While starting switch was ON (and engine was stopped) or engine was running, radiator coolant level switch signal circuit detected that radiator coolant level was low (sensor contact was open).		
Action of machine monitor	• Displays radiator coolant level monitor red on machine monitor.		
Problem that appears on machine	• If machine is used as it is, engine may be overheated.		
Related information	• Method of reproducing failure code: Start engine.		

		Cause	Standard value in normal state/Remarks on troubleshooting
Possible causes and standard value in normal state	1	Low coolant level (When system is normal)	Check radiator sub tank for lowering of coolant level. If coolant level is low, add coolant.
	2	Defective radiator coolant level monitor system	If cause 1 is not detected, radiator coolant level monitor may be defective. Carry out "E-2 Caution item lights up while starting switch is ON (and engine is stopped)" in E mode.

Failure code [B@CENS] T/C Oil Overheat

Action code	Failure code	Trouble	T/C Oil Overheat (Power train controller system)
—	**B@CENS**		
Contents of trouble	• While engine was running, torque converter oil temperature sensor signal circuit detected that power train oil was overheated.		
Action of controller	• Displays torque converter oil temperature monitor red on machine monitor.		
Problem that appears on machine	• If machine is used as it is, power train components may be damaged.		
Related information	• Torque converter oil temperature sensor signal is input to power train controller and then transmitted to machine monitor through communication system. • Power train oil temperature can be checked with monitoring function. (Code: 30100 T/C Oil Temperature) • Method of reproducing failure code: Start engine.		

		Cause	Standard value in normal state/Remarks on troubleshooting
Possible causes and standard value in normal state	1	Overheated power train oil (When system is normal)	Check power train oil for overheating. If it is overheated, remove cause.
	2	Defective torque converter oil temperature sensor system	If cause 1 is not detected, torque converter oil temperature sensor system may be defective. Carry out troubleshooting for failure code [**DGT1KA**] or [**DGT1KX**].

Failure code [B@HANS] Hyd Oil Overheat

Action code	Failure code	Trouble	Hyd Oil Overheat (Machine monitor system)
—	B@HANS		
Contents of trouble	• While engine was running, hydraulic oil temperature sensor signal circuit detected that hydraulic oil was overheated.		
Action of controller	• Displays hydraulic oil temperature monitor red on machine monitor.		
Problem that appears on machine	• If machine is used as it is, work equipment and HSS circuit components may be damaged.		
Related information	• Hydraulic oil temperature can be checked with monitoring function. (Code: 04401 Hyd Oil Temperature) • Method of reproducing failure code: Start engine.		

	Cause		Standard value in normal state/Remarks on troubleshooting
Possible causes and standard value in normal state	1	Overheated hydraulic oil (When system is normal)	Check hydraulic oil for overheating. If it is overheated, remove cause.
	2	Defective hydraulic oil temperature gauge system	If cause 1 is not detected, hydraulic oil temperature gauge system may be defective. Carry out troubleshooting for "E-10 Hydraulic oil temperature gauge (Multi-gauge) does not indicated normally" in E mode.

D155AX-6 Bulldozer

Form No. SEN00716-01

© 2006 KOMATSU
All Rights Reserved
Printed in Japan 05-06 (02)

BULLDOZER

D155AX-6

Machine model	Serial number
D155AX-6	80001 and up

40 Troubleshooting

Troubleshooting by failure and error codes, Part 2

Troubleshooting by failure and error codes, Part 2 4
Failure code [CA111] EMC Critical Internal Failure 4
Failure code [CA115] Eng Ne and Bkup Speed Sens Error 6
Failure code [CA122] Chg Air Press Sensor High Error 8
Failure code [CA123] Chg Air Press Sensor Low Error 10
Failure code [CA131] Throttle Sensor High Error 12
Failure code [CA132] Throttle Sensor Low Error 14
Failure code [CA135] Eng Oil Press Sensor High Error 16
Failure code [CA141] Eng Oil Press Sensor Low Error 18
Failure code [CA144] Coolant Temp Sens High Error 20
Failure code [CA145] Coolant Temp Sens Low Error 22
Failure code [CA153] Chg Air Temp Sensor High Error 24
Failure code [CA154] Chg Air Temp Sensor Low Error 26
Failure code [CA187] Sens Supply 2 Volt Low Error 26

Failure code [CA221] Ambient Press Sens High Error 28
Failure code [CA222] Ambient Press Sens Low Error 30
Failure code [CA227] Sens Supply 2 Volt High Error 32
Failure code [CA234] Eng Overspeed 34
Failure code [CA238] Ne Speed Sens Supply Volt Error 36
Failure code [CA263] Fuel Temp Sensor High Error 38
Failure code [CA265] Fuel Temp Sensor Low Error 39
Failure code [CA271] PCV1 Short Error 40
Failure code [CA272] PCV1 Open Error 41
Failure code [CA273] PCV2 Short Error 42
Failure code [CA274] PCV2 Open Error 43
Failure code [CA322] Inj #1 (L#1) Open/Short Error 44
Failure code [CA323] Inj #5 (L#5) Open/Short Error 45
Failure code [CA324] Inj #3 (L#3) Open/Short Error 46
Failure code [CA325] Inj #6 (L#6) Open/Short Error 47
Failure code [CA331] Inj #2 (L#2) Open/Short Error 48
Failure code [CA332] Inj #4 (L#4) Open/Short Error 49
Failure code [CA342] Calibration Code Incompatibility 50
Failure code [CA351] Injectors Drive Circuit Error 52
Failure code [CA352] Sens Supply 1 Volt Low Error 54
Failure code [CA386] Sens Supply 1 Volt High Error 56
Failure code [CA441] Battery Voltage Low Error 58
Failure code [CA442] Battery Voltage High Error 58
Failure code [CA449] Rail Press Very High Error 59
Failure code [CA451] Rail Press Sensor High Error 60
Failure code [CA452] Rail Press Sensor Low Error 62
Failure code [CA553] Rail Press High Error 62
Failure code [CA554] Rail Press Sensor In Range Error 63
Failure code [CA559] Rail Press Low Error 64
Failure code [CA689] Eng Ne Speed Sensor Error 68

Troubleshooting by failure and error codes, Part 2

Failure code [CA111] EMC Critical Internal Failure

Action code	Failure code	Trouble	EMC Critical Internal Failure (Engine controller system)
E04	**CA111**		
Contents of trouble	• Trouble occurred in engine controller.		
Action of controller	• None in particular.		
Problem that appears on machine	• Engine runs normally but may stop during operation or may not be able to start.		
Related information	• Source voltage of engine controller can be checked with monitoring function. (Code: 03203 Battery Power Supply)		

	Cause		Standard value in normal state/Remarks on troubleshooting		
Possible causes and standard value in normal state	1	Defective circuit breaker (CB30 or CB8)	If circuit breaker is turned OFF, circuit probably has ground fault. (See cause 3.)		
	2	Disconnection in wiring harness (Disconnection in wiring or defective contact in connector)	★ Prepare with starting switch OFF, then carry out troubleshooting without turning starting switch ON.		
			Wiring harness between EGC3 (female) (3), (4) – CB8 (2)	Resistance	Max. 1 Ω
			Wiring harness between CB8 (1) – CB30 (B30S)	Resistance	Max. 1 Ω
			Wiring harness between CB30 (B30L) – terminal BRB	Resistance	Max. 1 Ω
			Wiring harness between EGC3 (female) (1), (2) – chassis ground (GND20)	Resistance	Max. 1 Ω
	3	Ground fault in wiring harness (Contact with GND circuit)	★ Prepare with starting switch OFF, then carry out troubleshooting without turning starting switch ON.		
			Wiring harness between EGC3 (female) (3), (4) – CB8 (2) and chassis ground	Resistance	Min. 1 MΩ
			Wiring harness between CB8 (1) – CB30 (B30S), circuit branch end and chassis ground	Resistance	Min. 1 MΩ
			Wiring harness between CB30 (B30L) – terminal BRB and chassis ground	Resistance	Min. 1 MΩ
			Wiring harness between EGC3 (female) (1), (2) – chassis ground (GND20) and chassis ground	Resistance	Min. 1 MΩ
	4	Defective engine controller	★ Prepare with starting switch OFF, then turn starting switch ON and carry out troubleshooting.		
			EGC3	Starting switch	Voltage
			Between (3), (4) – (1), (2)	ON	20 – 30 V

Circuit diagram related to engine controller power supply

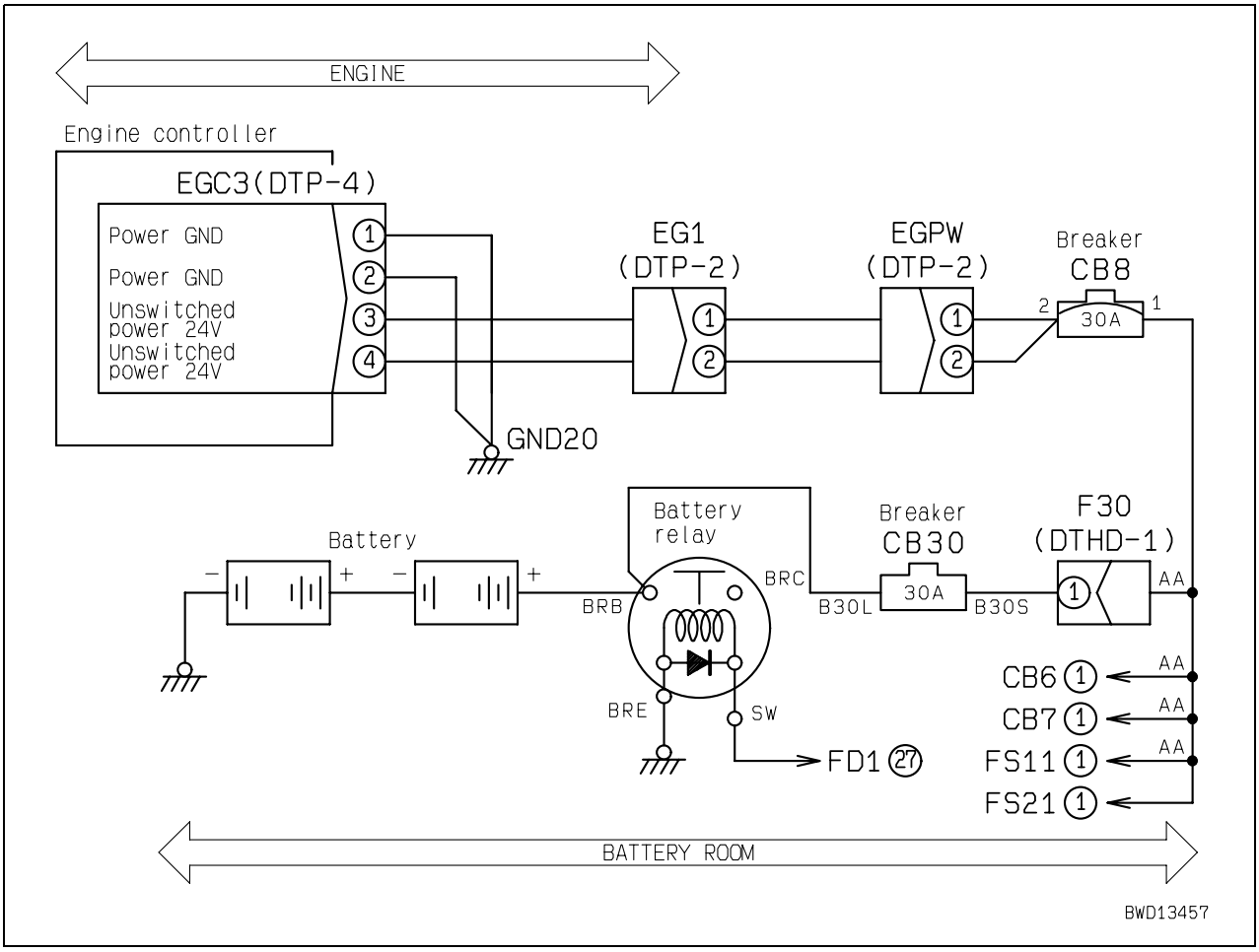

Failure code [CA115] Eng Ne and Bkup Speed Sens Error

Action code	Failure code	Trouble	Eng Ne and Bkup Speed Sens Error (Engine controller system)
E04	**CA115**		
Contents of trouble	• Trouble occurred in Ne speed sensor circuit and Bkup speed sensor circuit simultaneously.		
Action of controller	• None in particular.		
Problem that appears on machine	• Engine cannot be started (if engine has been stopped). • Engine stops (if engine has been running).		
Related information			

	Cause		Standard value in normal state/Remarks on troubleshooting
Possible causes and standard value in normal state	1	Defective Ne speed sensor system	Ne speed sensor system may be defective. Carry out trouble-shooting for code [**CA689**].
	2	Defective Bkup speed sen-sor system	Bkup speed sensor system may be defective. Carry out trouble-shooting for code [**CA778**].
	3	Defective mount of Ne speed sensor	Check mount of Ne speed sensor directly for defect (defective installation of sensor, internal trouble of flywheel, etc.)
	4	Defective mount of Bkup speed sensor	Check mount of Bkup speed sensor directly for defect (defective installation of sensor, internal trouble of supply pump, etc.)
	5	Defective connection (Wrong connection) of sensor	Check Ne speed sensor and Bkup speed sensor directly for defec-tive connection (wrong connection).
	6	Defective engine controller	If causes 1 – 5 are not detected, engine controller may be defec-tive. (Since trouble is in system, troubleshooting cannot be carried out.)

Failure code [CA122] Chg Air Press Sensor High Error

Action code	Failure code	Trouble	Chg Air Press Sensor High Error (Engine controller system)
E03	**CA122**		
Contents of trouble	• Signal voltage in charge pressure sensor circuit is abnormally high.		
Action of controller	• Fixes charge pressure (400 kPa {4.08 kg/cm^2}) and continues operation.		
Problem that appears on machine	• Acceleration performance of engine lowers or black smoke is produced more during acceleration.		
Related information	• State of charge pressure sensor can be checked with monitoring function. (Code: 36500 Charge Pressure-Abs)		

	Cause		Standard value in normal state/Remarks on troubleshooting			
Possible causes and standard value in normal state	1	Defective sensor power supply system	If code [**CA187**] or [**CA227**] is indicated, carry out troubleshooting for it first.			
	2	Defective charge pressure sensor (Internal trouble)	★ Prepare with starting switch OFF, then turn starting switch ON or start engine and carry out troubleshooting.			
			PIM		Voltage	
			Between (1) – (2)	Power supply	4.75 – 5.25 V	
			Pressure sensor voltage is measured with wiring harness connected. Accordingly, if voltage is abnormal, check wiring harness and controller, too, for another cause of trouble, and then judge.			
	3	Disconnection in wiring harness (Disconnection in wiring or defective contact in connector)	★ Prepare with starting switch OFF, then carry out troubleshooting without turning starting switch ON.			
			Wiring harness between EGC1 (female) (37) – PIM (female) (1)		Resistance	Max. 1 Ω
			Wiring harness between EGC1 (female) (47) – PIM (female) (2)		Resistance	Max. 1 Ω
			Wiring harness between EGC1 (female) (44) – PIM (female) (3)		Resistance	Max. 1 Ω
	4	Ground fault in wiring harness (Contact with GND circuit)	★ Prepare with starting switch OFF, then carry out troubleshooting without turning starting switch ON.			
			Wiring harness between EGC1 (female) (37) – PIM (female) (1) and chassis ground		Resistance	Min. 1 MΩ
			Wiring harness between EGC1 (female) (47) – PIM (female) (2) and chassis ground		Resistance	Min. 1 MΩ
			Wiring harness between EGC1 (female) (44) – PIM (female) (3) and chassis ground		Resistance	Min. 1 MΩ
	5	Short circuit in wiring harness (with another wiring harness)	★ Prepare with starting switch OFF, then carry out troubleshooting without turning starting switch ON.			
			Wiring harness between EGC1 (female) (37) – PIM (female) (1) and between EGC1 (female) (47) – PIM (female) (2)		Resistance	Min. 1 MΩ
			Wiring harness between EGC1 (female) (37) – PIM (female) (1) and between EGC1 (female) (44) – PIM (female) (3)		Resistance	Min. 1 MΩ
			Chassis ground between EGC1 (female) (47) – PIM (female) (2) and between EGC1 (female) (44) – PIM (female) (3)		Resistance	Min. 1 MΩ
	6	Defective engine controller	★ Prepare with starting switch OFF, then turn starting switch ON or start engine and carry out troubleshooting.			
			EGC1		Voltage	
			Between (37) – (47)	Power supply	4.75 – 5.25 V	

Circuit diagram related to charge pressure sensor

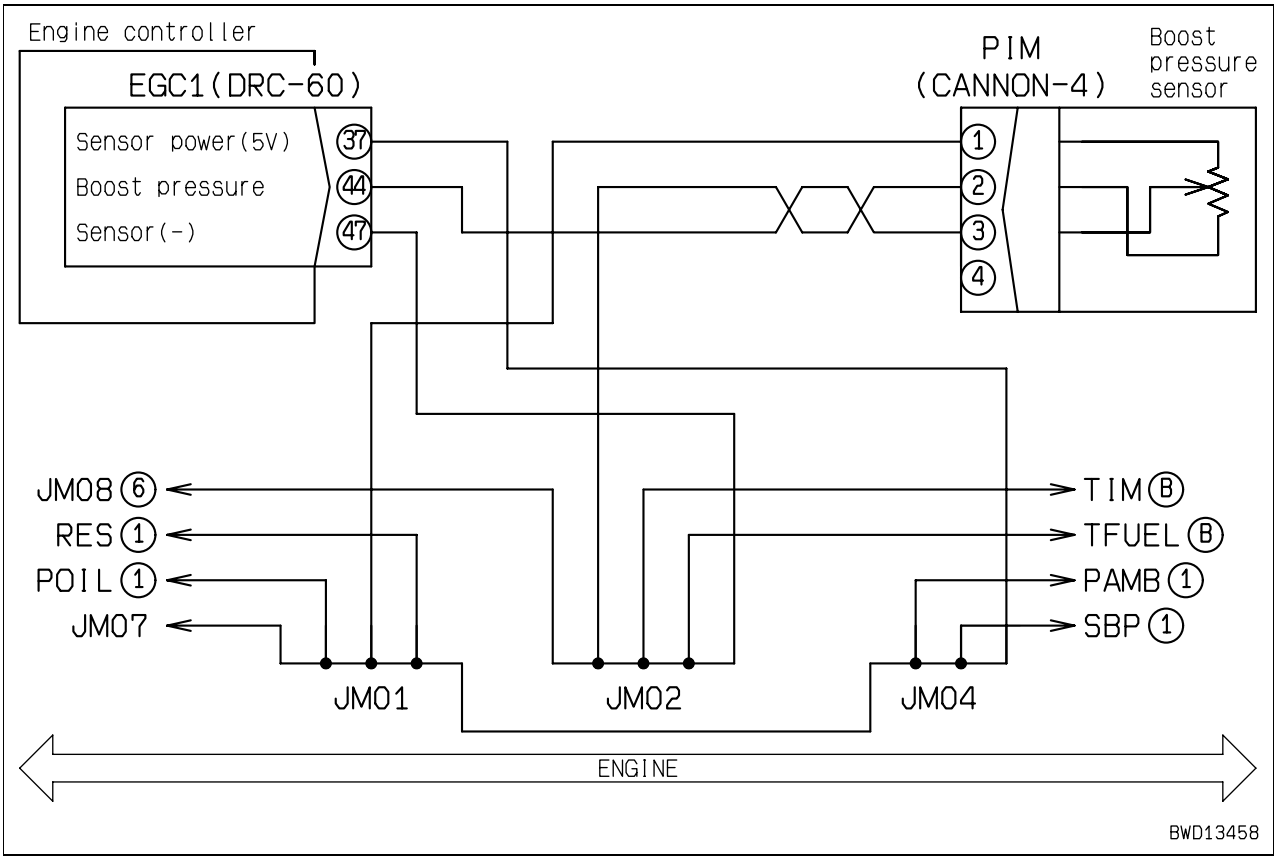

Failure code [CA123] Chg Air Press Sensor Low Error

Action code	Failure code	Trouble	Chg Air Press Sensor Low Error (Engine controller system)
E03	**CA123**		
Contents of trouble	• Signal voltage in charge pressure sensor circuit is abnormally low.		
Action of controller	• Fixes charge pressure (400 kPa {4.08 kg/cm^2}) and continues • operation.		
Problem that appears on machine	• Acceleration performance of engine lowers or black smoke is produced more during acceleration.		
Related information	• State of charge pressure sensor can be checked with monitoring function. (Code: 36500 Charge Pressure-Abs)		

Possible causes and standard value in normal state	Cause	Standard value in normal state/Remarks on troubleshooting
	Carry out troubleshooting for failure code [**CA122**].	

Failure code [CA131] Throttle Sensor High Error

Action code	Failure code	Trouble	Throttle Sensor High Error (Engine controller system)
E03	**CA131**		
Contents of trouble	• Signal voltage in decelerator pedal potentiometer circuit is abnormally high.		
Action of controller	• Sets throttle position with fuel control dial signal and continues operation.		
Problem that appears on machine			
Related information	• State of decelerator pedal optimum operation range signal can be checked with monitoring function. (Code: 03001 Throttle Pos Sens Volt)		

	Cause		Standard value in normal state/Remarks on troubleshooting			
Possible causes and standard value in normal state	1	Defective sensor power supply system	If code [**CA2185**] or [**CA2186**] is indicated, carry out troubleshooting for it first.			
	2	Defective fuel control dial (Internal trouble)	★ Prepare with starting switch OFF, then carry out troubleshooting without turning starting switch ON.			
			DCL (male)		Resistance	
			Between (B) – (C)		1.5 – 2.5 kΩ	
			Between (A) – (B)		0 – 3 kΩ	
			Between (A) – (C)		0 – 3 kΩ	
	3	Disconnection in wiring harness (Disconnection in wiring or defective contact in connector)	★ Prepare with starting switch OFF, then carry out troubleshooting without turning starting switch ON.			
			Wiring harness between EGC2 (female) (9) – DCL (female) (A)		Resistance	Max. 1 Ω
			Wiring harness between EGC2 (female) (22) – DCL (female) (B)		Resistance	Max. 1 Ω
			Wiring harness between EGC2 (female) (23) – DCL (female) (C)		Resistance	Max. 1 Ω
	4	Ground fault in wiring harness (Contact with GND circuit)	★ Prepare with starting switch OFF, then carry out troubleshooting without turning starting switch ON.			
			Wiring harness between EGC2 (female) (9) – DCL (female) (A) and chassis ground		Resistance	Min. 1 MΩ
			Wiring harness between EGC2 (female) (22) – DCL (female) (B) and chassis ground		Resistance	Min. 1 MΩ
			Wiring harness between EGC2 (female) (23) – DCL (female) (C) and chassis ground		Resistance	Min. 1 MΩ
	5	Defective engine controller	★ Prepare with starting switch OFF, then turn starting switch ON and carry out troubleshooting.			
			EGC2		Voltage	
			Between (22) – (23)	Power supply	4.75 – 5.25 V	
			Between (9) – (23)	Signal	0.5 – 4.5 V	

Circuit diagram related to decelerator pedal potentiometer

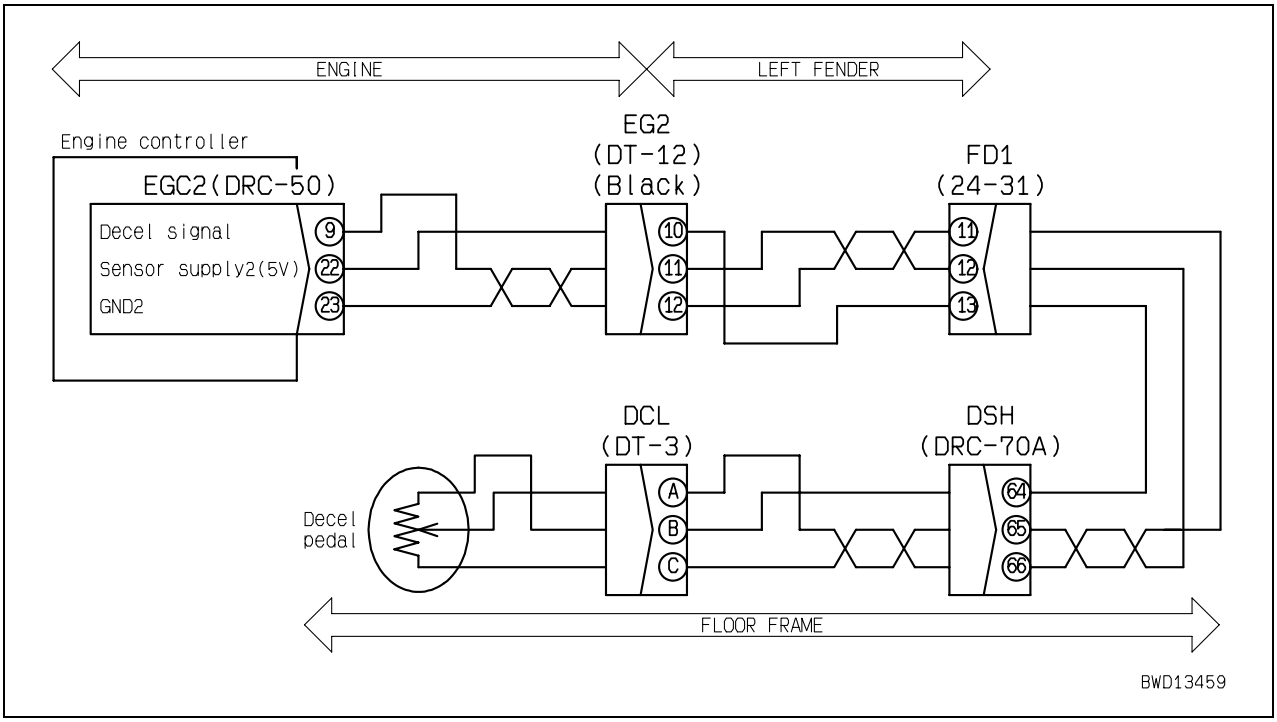

Failure code [CA132] Throttle Sensor Low Error

Action code	Failure code	Trouble	Throttle Sensor Low Error (Engine controller system)
E03	**CA132**		
Contents of trouble	• Signal voltage in decelerator pedal potentiometer circuit is abnormally low.		
Action of controller	• Sets throttle position with fuel control dial signal and continues operation.		
Problem that appears on machine			
Related information	• State of decelerator pedal optimum operation range signal can be checked with monitoring function. (Code: 03001 Throttle Pos Sens Volt)		

Possible causes and standard value in normal state	Cause	Standard value in normal state/Remarks on troubleshooting
	Carry out troubleshooting for failure code [**CA131**].	

Failure code [CA135] Eng Oil Press Sensor High Error

Action code	Failure code	Trouble	Eng Oil Press Sensor High Error (Engine controller system)
E02	**CA135**		
Contents of trouble	• Signal voltage in engine oil pressure sensor circuit is abnormally high.		
Action of controller	• Sets engine oil pressure to default value (250 kPa {2.55 kg/cm²}) and continues operation.		
Problem that appears on machine			
Related information	• State of engine oil pressure sensor can be checked with monitoring function. (Code: 37201 Eng Oil Press Sens Volt)		

	Cause		Standard value in normal state/Remarks on troubleshooting			
Possible causes and standard value in normal state	1	Defective sensor power supply system	If code [**CA187**] or [**CA227**] is indicated, carry out troubleshooting for it first.			
	2	Defective engine oil pressure sensor (Internal trouble)	★ Prepare with starting switch OFF, then turn starting switch ON or start engine and carry out troubleshooting.			
			POIL		Voltage	
			Between (1) – (2)	Power supply	4.75 –5.25 V	
			Sensor voltage is measured with wiring harness connected. Accordingly, if voltage is abnormal, check wiring harness and controller, too, for another cause of trouble, and then judge.			
	3	Disconnection in wiring harness (Disconnection in wiring or defective contact in connector)	★ Prepare with starting switch OFF, then carry out troubleshooting without turning starting switch ON.			
			Wiring harness between EGC1 (female) (37) – POIL (female) (1)		Resistance	Max. 1 Ω
			Wiring harness between EGC1 (female) (47) – POIL (female) (2)		Resistance	Max. 1 Ω
			Wiring harness between EGC1 (female) (13) – POIL (female) (3)		Resistance	Max. 1 Ω
	4	Ground fault in wiring harness (Contact with GND circuit)	★ Prepare with starting switch OFF, then carry out troubleshooting without turning starting switch ON.			
			Wiring harness between EGC1 (female) (37) – POIL (female) (1) and chassis ground		Resistance	Min. 1 MΩ
			Wiring harness between EGC1 (female) (47) – POIL (female) (2) and chassis ground		Resistance	Min. 1 MΩ
			Wiring harness between EGC1 (female) (13) – POIL (female) (3) and chassis ground		Resistance	Min. 1 MΩ
	5	Short circuit in wiring harness (with another wiring harness)	★ Prepare with starting switch OFF, then carry out troubleshooting without turning starting switch ON.			
			Wiring harness between EGC1 (female) (37) – POIL (female) (1) and between EGC1 (female) (47) – POIL (female) (2)		Resistance	Min. 1 MΩ
			Wiring harness between EGC1 (female) (37) – POIL (female) (1) and between EGC1 (female) (13) – POIL (female) (3)		Resistance	Min. 1 MΩ
			Wiring harness between EGC1 (female) (47) – POIL (female) (2) and between EGC1 (female) (13) – POIL (female) (3)		Resistance	Min. 1 MΩ
	6	Defective engine controller	★ Prepare with starting switch OFF, then turn starting switch ON or start engine and carry out troubleshooting.			
			EGC1		Voltage	
			Between (37) – (47)	Power supply	4.75 – 5.25 V	

Circuit diagram related to engine oil pressure sensor

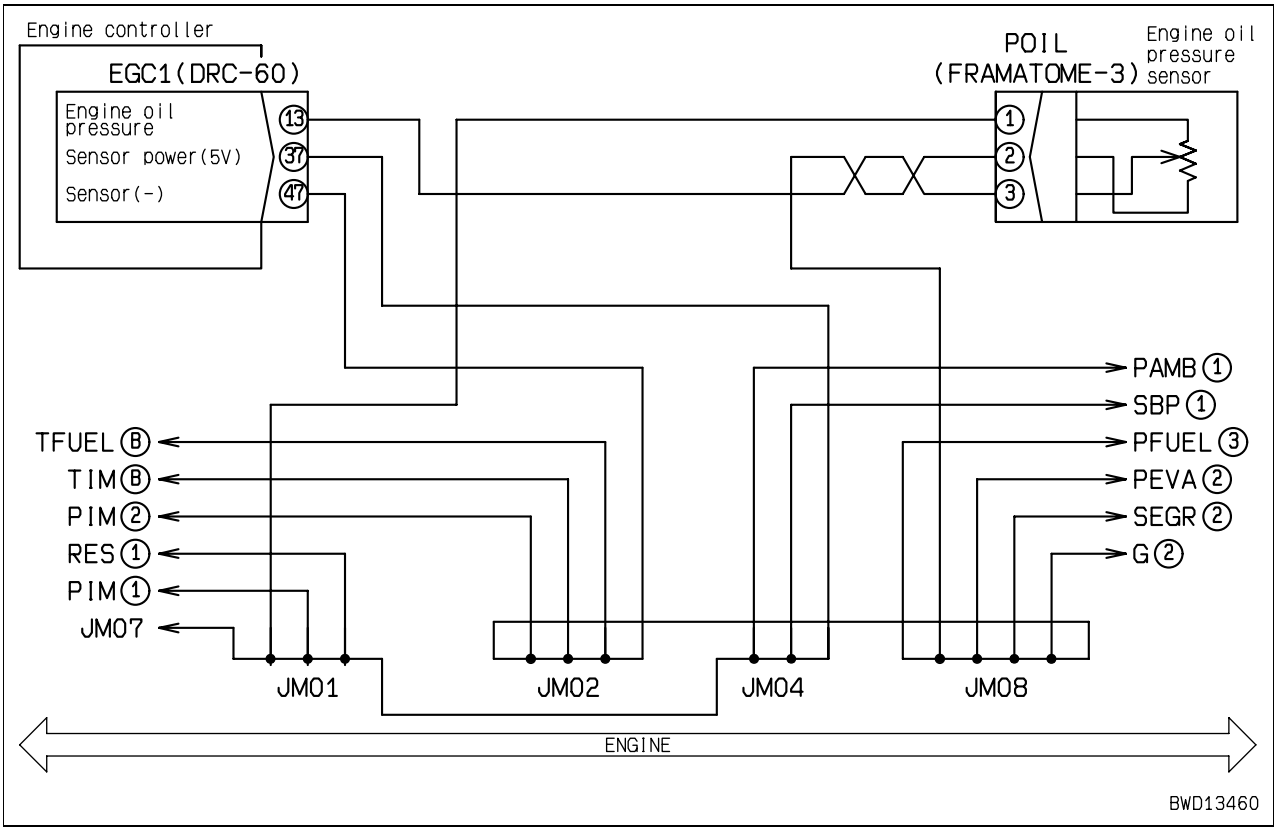

Failure code [CA141] Eng Oil Press Sensor Low Error

Action code	Failure code	Trouble	Eng Oil Press Sensor Low Error (Engine controller system)
E02	**CA141**		
Contents of trouble	• Signal voltage in engine oil pressure sensor circuit is abnormally low.		
Action of controller	• Sets engine oil pressure to default value (250 kPa {2.55 kg/cm^2}) and continues operation.		
Problem that appears on machine			
Related information	• State of engine oil pressure sensor can be checked with monitoring function. (Code: 37201 Eng Oil Press Sens Volt)		

Possible causes and standard value in normal state	Cause	Standard value in normal state/Remarks on troubleshooting
	Carry out troubleshooting for failure code [**CA135**].	

Failure code [CA144] Coolant Temp Sens High Error

Action code	Failure code	Trouble	Coolant Temp Sens High Error (Engine controller system)
E02	**CA144**		
Contents of trouble	• Signal voltage in engine coolant temperature sensor circuit is abnormally high.		
Action of controller	• Fixes engine coolant temperature (90°C) and continues operation.		
Problem that appears on machine	• Startability of engine lowers at low temperature.		
Related information	• State of engine coolant temperature sensor can be checked with monitoring function. (Code: 04105 Coolant Temp Sens Volt)		

	Cause		Standard value in normal state/Remarks on troubleshooting			
Possible causes and standard value in normal state	1	Defective engine coolant temperature sensor (Internal trouble)	★ Prepare with starting switch OFF, then carry out troubleshooting without turning starting switch ON.			
			TWTR (male)	Coolant temperature	Resistance	
			Between (A) – (B)	10 – 100°C	0.6 – 20 kΩ	
	2	Disconnection in wiring harness (Disconnection in wiring or defective contact in connector)	★ Prepare with starting switch OFF, then carry out troubleshooting without turning starting switch ON.			
			Wiring harness between EGC1 (female) (15) – TWTR (female) (A)		Resistance	Max. 1 Ω
			Wiring harness between EGC1 (female) (38) – TWTR (female) (B)		Resistance	Max. 1 Ω
	3	Ground fault in wiring harness (Contact with GND circuit)	★ Prepare with starting switch OFF, then carry out troubleshooting without turning starting switch ON.			
			Wiring harness between EGC1 (female) (15) – TWTR (female) (A) and chassis ground		Resistance	Min. 1 MΩ
	4	Defective engine controller	★ Prepare with starting switch OFF, then carry out troubleshooting without turning starting switch ON.			
			EGC1 (female)	Coolant temperature	Resistance	
			Between (15) – (38)	10 – 100°C	0.6 – 20 kΩ	

Circuit diagram related to engine coolant temperature sensor

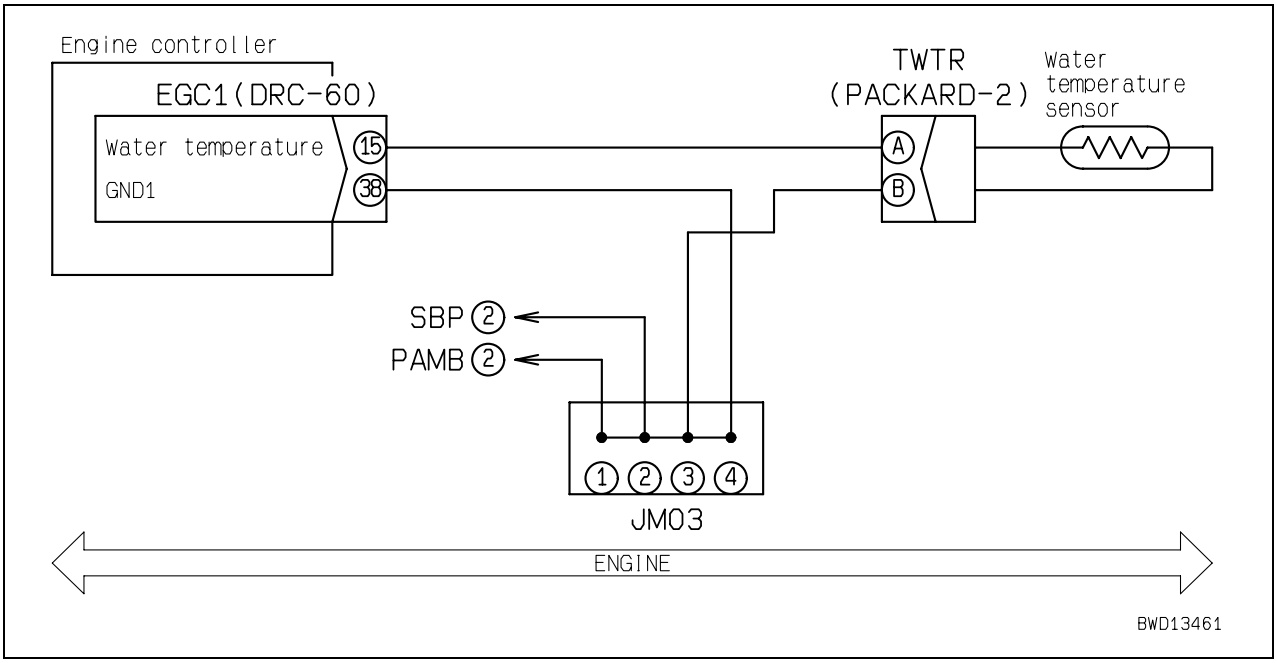

Failure code [CA145] Coolant Temp Sens Low Error

Action code	Failure code	Trouble	Coolant Temp Sens Low Error (Engine controller system)
E02	**CA145**		
Contents of trouble	• Signal voltage in engine coolant temperature sensor circuit is abnormally low.		
Action of controller	• Fixes engine coolant temperature (90°C) and continues operation.		
Problem that appears on machine	• Startability of engine lowers at low temperature.		
Related information	• State of engine coolant temperature sensor can be checked with monitoring function. (Code: 04105 Coolant Temp Sens Volt)		

Possible causes and standard value in normal state	Cause	Standard value in normal state/Remarks on troubleshooting
	Carry out troubleshooting for failure code [**CA144**].	

Failure code [CA153] Chg Air Temp Sensor High Error

Action code	Failure code	Trouble	Chg Air Temp Sensor High Error (Engine controller system)
E01	**CA153**		
Contents of trouble	• Signal voltage in charge temperature sensor circuit is abnormally high.		
Action of controller	• Fixes charge temperature (intake air temperature) (70°C) and continues operation.		
Problem that appears on machine	• Startability of engine lowers at low temperature.		
Related information	• State of charge temperature sensor signal can be checked with monitoring function. (Code: 18501 Charge Temp Sens Volt)		

	Cause		Standard value in normal state/Remarks on troubleshooting			
Possible causes and standard value in normal state	1	Defective charge temperature sensor (Internal trouble)	★ Prepare with starting switch OFF, then carry out troubleshooting without turning starting switch ON.			
			TIM (male)	Intake air temperature	Resistance	
			Between (A) – (B)	10 – 100°C	0.5 – 20 kΩ	
			Between (A) – chassis ground	All range	Min. 1 MΩ	
	2	Disconnection in wiring harness (Disconnection in wiring or defective contact in connector)	★ Prepare with starting switch OFF, then carry out troubleshooting without turning starting switch ON.			
			Wiring harness between EGC1 (female) (23) – TIM (female) (A)		Resistance	Max. 1 Ω
			Wiring harness between EGC1 (female) (47) – TIM (female) (B)		Resistance	Max. 1 Ω
	3	Ground fault in wiring harness (Contact with GND circuit)	★ Prepare with starting switch OFF, then carry out troubleshooting without turning starting switch ON.			
			Wiring harness between EGC1 (female) (23) – TIM (female) (A) and chassis ground		Resistance	Min. 1 MΩ
	4	Defective engine controller	★ Prepare with starting switch OFF, then carry out troubleshooting without turning starting switch ON.			
			EGC1 (female)	Intake air temperature	Resistance	
			Between (23) – (47)	10 – 100°C	0.5 – 20 kΩ	

Circuit diagram related to charge temperature sensor

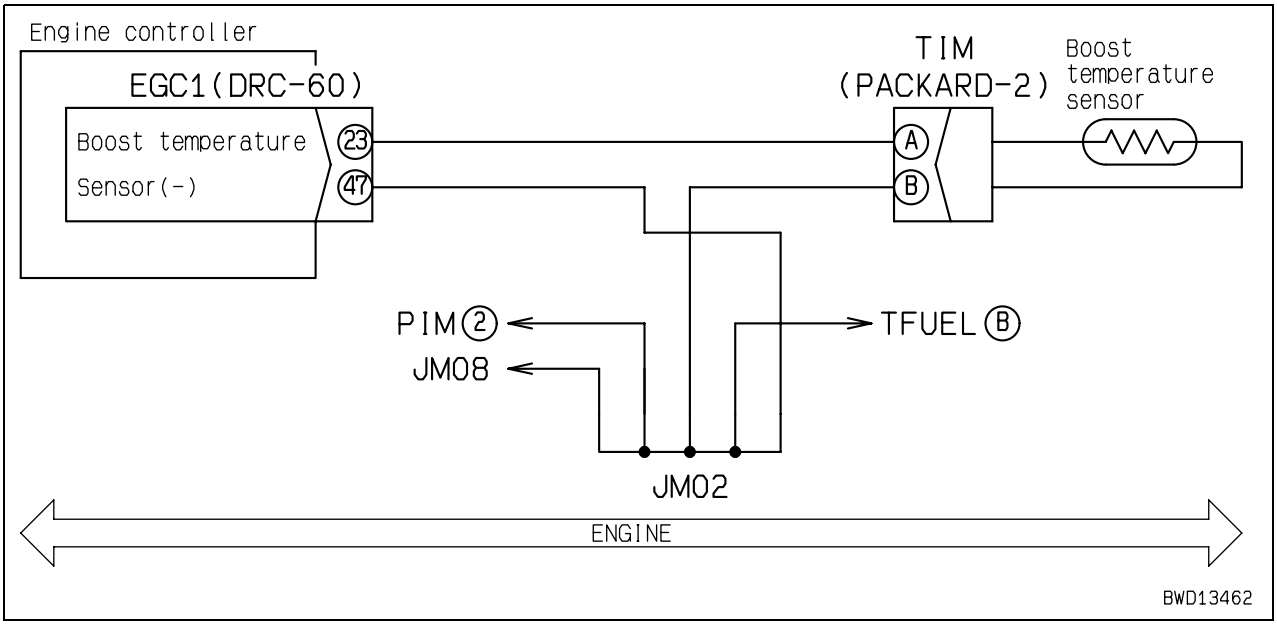

Failure code [CA154] Chg Air Temp Sensor Low Error

Action code	Failure code	Trouble	Chg Air Temp Sensor Low Error (Engine controller system)
E01	**CA154**		
Contents of trouble	• Signal voltage in charge temperature sensor circuit is abnormally low.		
Action of controller	• Fixes charge temperature (intake air temperature) (70°C) and continues operation.		
Problem that appears on machine	• Startability of engine lowers at low temperature.		
Related information	• State of charge temperature sensor signal can be checked with monitoring function. (Code: 18501 Charge Temp Sens Volt)		

Possible causes and standard value in normal state	Cause	Standard value in normal state/Remarks on troubleshooting
	Carry out troubleshooting for failure code [**CA153**].	

Failure code [CA187] Sens Supply 2 Volt Low Error

Action code	Failure code	Trouble	Sens Supply 2 Volt Low Error (Engine controller system)
E03	**CA187**		
Contents of trouble	• Signal voltage in sensor power supply 2 (5 V) circuit is abnormally low.		
Action of controller	• Operates Bkup speed sensor with signals of Ne speed sensor. • Sets oil pressure sensor to default value (250 kPa {2.55 kg/cm^2}) and continues operation. • Sets ambient pressure sensor to default value (52.44 kPa {0.53 kg/cm^2}) and continues operation. • Fixes charge pressure sensor value (400 kPa {4.08 kg/cm^2}) and continues operation. • Sets EGR inlet pressure sensor to default value (102 kPa {1.05 kg/cm^2}) and continues operation. • Limits output of EGR valve lift sensor and closes EGR valve and bypass valve. • Limits output of bypass valve lift sensor and closes EGR valve and bypass valve.		
Problem that appears on machine	• Engine output drops.		
Related information			

Possible causes and standard value in normal state	Cause	Standard value in normal state/Remarks on troubleshooting
	Carry out troubleshooting for failure code [**CA227**].	

Failure code [CA221] Ambient Press Sens High Error

Action code	Failure code	Trouble	Ambient Press Sens High Error (Engine controller system)
E03	**CA221**		
Contents of trouble	• Signal voltage in ambient pressure sensor circuit is abnormally high.		
Action of controller	• Sets ambient pressure to default value (52.44 kPa {0.53 kg/cm^2}) and continues operation.		
Problem that appears on machine	• Engine output drops.		
Related information	• State of ambient pressure sensor signal can be checked with monitoring function. (Code: 37401 Ambient Press Sens Volt)		

	Cause		Standard value in normal state/Remarks on troubleshooting			
Possible causes and standard value in normal state	1	Defective sensor power supply system	If code [**CA187**] or [**CA227**] is indicated, carry out troubleshooting for it first.			
	2	Defective ambient pressure sensor (Internal trouble)	★ Prepare with starting switch OFF, then turn starting switch ON and carry out troubleshooting.			
			PAMB		Voltage	
			Between (1) – (2)	Power supply	4.75 – 5.25 V	
			Between (3) – (2)	Signal		
			Sensor voltage is measured with wiring harness connected. Accordingly, if voltage is abnormal, check wiring harness and controller, too, for another cause of trouble, and then judge.			
	3	Disconnection in wiring harness (Disconnection in wiring or defective contact in connector)	★ Prepare with starting switch OFF, then carry out troubleshooting without turning starting switch ON.			
			Wiring harness between EGC1 (female) (37) – PAMB (female) (1)		Resistance	Max. 1 Ω
			Wiring harness between EGC1 (female) (38) – PAMB (female) (2)		Resistance	Max. 1 Ω
			Wiring harness between EGC1 (female) (3) – PAMB (female) (3)		Resistance	Max. 1 Ω
	4	Ground fault in wiring harness (Contact with GND circuit)	★ Prepare with starting switch OFF, then carry out troubleshooting without turning starting switch ON.			
			Wiring harness between EGC1 (female) (37) – PAMB (female) (1) and chassis ground		Resistance	Min. 1 MΩ
			Wiring harness between EGC1 (female) (38) – PAMB (female) (2) and chassis ground		Resistance	Min. 1 MΩ
			Wiring harness between EGC1 (female) (3) – PAMB (female) (3) and chassis ground		Resistance	Min. 1 MΩ
	5	Short circuit in wiring harness (with another wiring harness)	★ Prepare with starting switch OFF, then carry out troubleshooting without turning starting switch ON.			
			Wiring harness between EGC1 (female) (37) – PAMB (female) (1) and between EGC1 (female) (38) - PAMB (female) (2)		Resistance	Min. 1 MΩ
			Wiring harness between EGC1 (female) (37) – PAMB (female) (1) and between EGC1 (female) (3) – PAMB (female) (3)		Resistance	Min. 1 MΩ
			Wiring harness between EGC1 (female) (38) – PAMB (female) (2) and between EGC1 (female) (3) – PAMB (female) (3)		Resistance	Min. 1 MΩ
	6	Defective engine controller	★ repare with starting switch OFF, then turn starting switch ON or start engine and carry out troubleshooting.			
			EGC1		Voltage	
			Between (33) – (38)		4.75 – 5.25 V	
			Between (3) – (38)			

Circuit diagram related to ambient pressure sensor

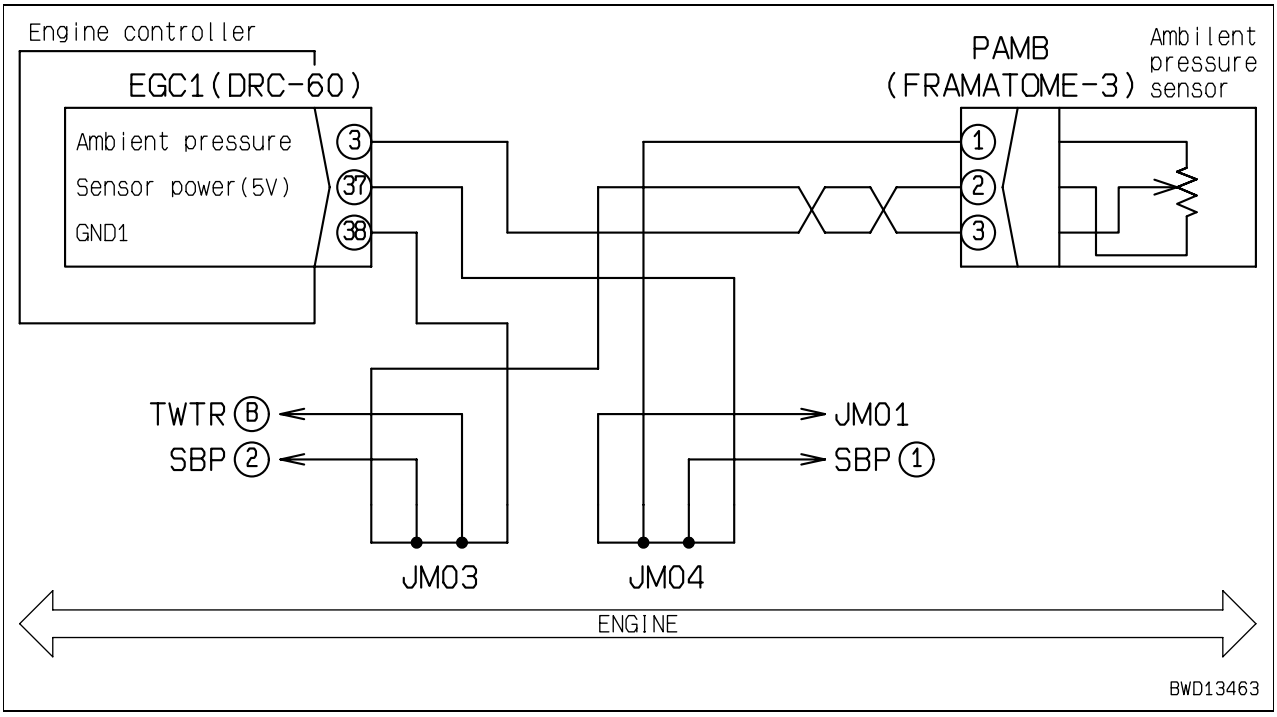

Failure code [CA222] Ambient Press Sens Low Error

Action code	Failure code	Trouble	Ambient Press Sens Low Error (Engine controller system)
E03	**CA222**		
Contents of trouble	• Signal voltage in ambient pressure sensor circuit is abnormally low.		
Action of controller	• Sets ambient pressure to default value (52.44 kPa {0.53 kg/cm^2}) and continues operation.		
Problem that appears on machine	• Engine output drops.		
Related information	• State of ambient pressure sensor signal can be checked with monitoring function. (Code: 37401 Ambient Press Sens Volt)		

Possible causes and standard value in normal state	Cause	Standard value in normal state/Remarks on troubleshooting
	Carry out troubleshooting for failure code [**CA221**].	

Failure code [CA227] Sens Supply 2 Volt High Error

Action code	Failure code	Trouble	Sens Supply 2 Volt High Error (Engine controller system)
E03	**CA227**		
Contents of trouble	• Signal voltage in sensor power supply 2 (5 V) circuit is abnormally high.		
Action of controller	• Operates Bkup speed sensor with signals of Ne speed sensor. • Sets oil pressure sensor to default value (250 kPa [2.55 kg/cm²}) and continues operation. • Sets ambient pressure to default value (52.44 kPa {0.53 kg/cm²}) and continues operation. • Fixes charge pressure sensor value (400 kPa [4.08 kg/cm²}) and continues operation. • Sets EGR inlet pressure sensor to default value (102 kPa {1.05 kg/cm²}) and continues operation. • Limits output of EGR valve lift sensor and closes EGR valve and bypass valve. • Limits output of bypass valve lift sensor and closes EGR valve and bypass valve.		
Problem that appears on machine	• Engine output drops.		
Related information			

	Cause		Standard value in normal state/Remarks on troubleshooting			
Possible causes and standard value in normal state	1	Defective related system	If another failure code is indicated, carry out troubleshooting for it.			
	2	Defective sensor (Internal trouble)	★ Prepare with starting switch OFF, then turn starting switch ON and carry out troubleshooting.			
			Disconnect devices at right in order. If "E" of failure code disappears when a device is disconnected, that device has trouble in it.	Bkup speed sensor	G connector	
				Oil pressure sensor	POIL connector	
				Ambient pressure sensor	PAMB connector	
				Charge pressure sensor	PIM connector	
				EGR inlet pressure sensor	PEVA connector	
				EGR valve lift sensor	SEGR connector	
				Bypass valve lift sensor	SBP connector	
	3	Disconnection in wiring harness (Disconnection in wiring or defective contact in connector)	★ Prepare with starting switch OFF, then carry out troubleshooting without turning starting switch ON.			
			Wiring harness between EGC1 (female) (37) – each sensor (female)		Resistance	Max. 1 Ω
			Wiring harness between EGC1 (female) (47) – each sensor (female)		Resistance	Max. 1 Ω
	4	Ground fault in wiring harness (Contact with GND circuit)	★ Prepare with starting switch OFF, then carry out troubleshooting without turning starting switch ON.			
			Wiring harness between EGC1 (female) (37) – each sensor (female) and chassis ground		Resistance	Min. 1 MΩ
			Wiring harness between EGC1 (female) (47) – each sensor (female) and chassis ground		Resistance	Min. 1 MΩ
	5	Short circuit in wiring harness (with another wiring harness)	★ Prepare with starting switch OFF, then carry out troubleshooting without turning starting switch ON.			
			Wiring harness between EGC1 (female) (37) – each sensor (female) and between EGC1 (female) (47) – each sensor (female)		Resistance	Min. 1 MΩ
	6	Defective engine controller	★ Prepare with starting switch OFF, then turn starting switch ON and carry out troubleshooting.			
			EGC1		Voltage	
			Between (37) – (47)		4.75 – 5.25 V	

Circuit diagram related to engine controller sensor power supply 2 (5 V)

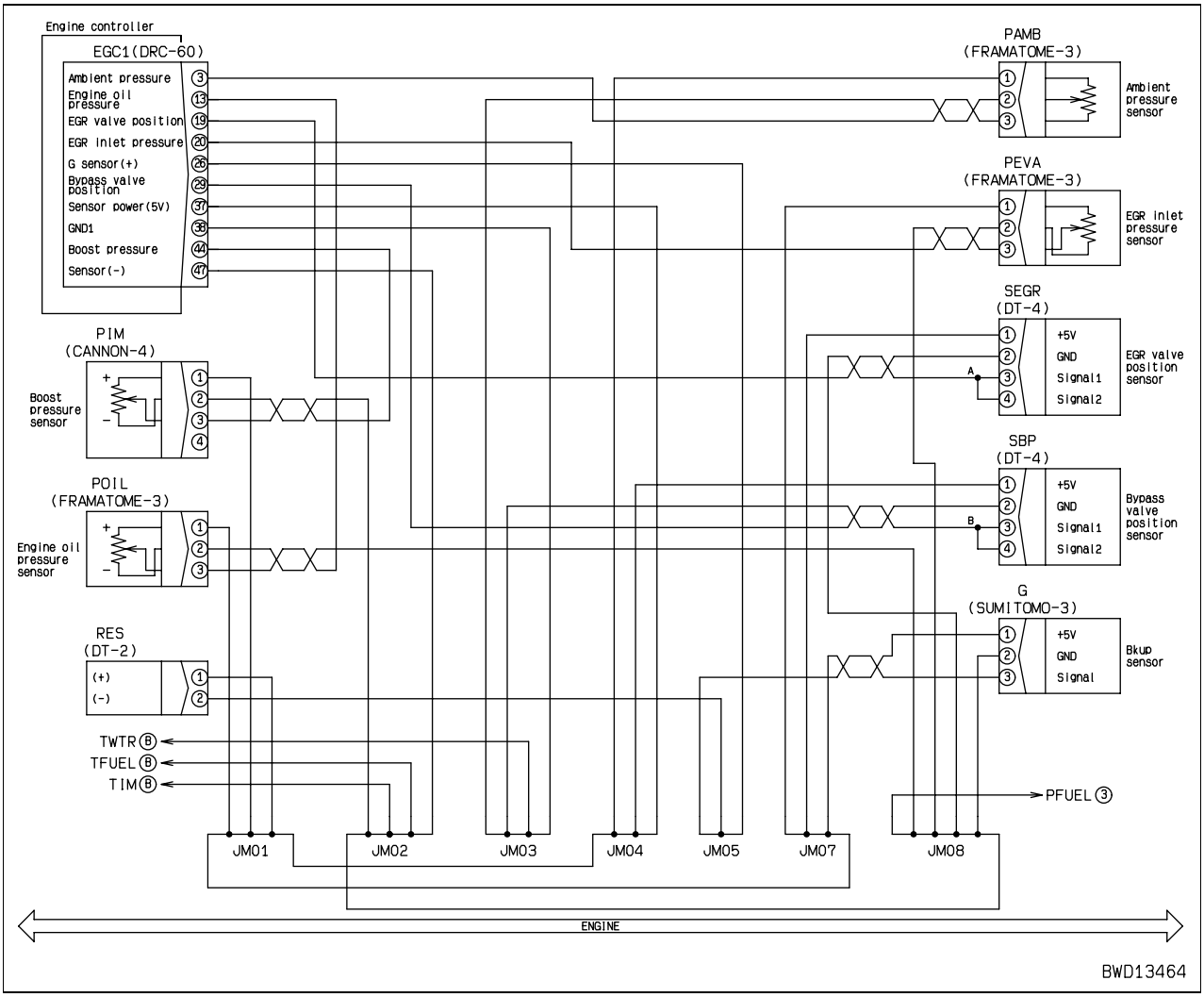

Failure code [CA234] Eng Overspeed

Action code	Failure code	Trouble	Eng Overspeed (Engine controller system)
—	**CA234**		
Contents of trouble	• Engine speed is above operating range.		
Action of controller	• Limits fuel injection rate until engine speed lowers to operating range.		
Problem that appears on machine	• Engine speed fluctuates.		
Related information	• Engine speed can be checked with monitoring function. (Code: 01002 Engine Speed)		

	Cause		Standard value in normal state/Remarks on troubleshooting
Possible causes and standard value in normal state	1	Defective related system	If another failure code is indicated, carry out troubleshooting for it.
	2	Improper way of use	Way of use of machine may be improper. Teach proper way of use to operator.
	3	Defective engine controller	If causes 1 – 2 are not detected, engine controller may be defective. (Since trouble is in system, troubleshooting cannot be carried out.)

Failure code [CA238] Ne Speed Sens Supply Volt Error

Action code	Failure code	Trouble	Ne Speed Sens Supply Volt Error (Engine controller system)
E03	**CA238**		
Contents of trouble	• Trouble occurred in Ne speed sensor power supply (5 V) circuit.		
Action of controller	• Controls Ne speed sensor with signals of Bkup speed sensor.		
Problem that appears on machine	• Running engine stops (when Bkup speed sensor is also abnormal). • Stopped engine cannot be started (when Bkup speed sensor is also abnormal).		
Related information			

	Cause		Standard value in normal state/Remarks on troubleshooting			
Possible causes and standard value in normal state	1	Defective Ne speed sensor (Internal trouble)	★ Prepare with starting switch OFF, then turn starting switch ON and carry out troubleshooting.			
			Disconnect devices at right in order. If "E" of failure code disappears when a device is disconnected, that device has trouble in it.	Engine Ne speed sensor	NE connector	
	2	Disconnection in wiring harness (Disconnection in wiring or defective contact in connector)	★ Prepare with starting switch OFF, then carry out troubleshooting without turning starting switch ON.			
			Wiring harness between EGC1 (female) (16) – NE (female) (1)		Resistance	Max. 1 Ω
			Wiring harness between EGC1 (female) (48) – NE (female) (2)		Resistance	Max. 1 Ω
	3	Ground fault in wiring harness (Contact with GND circuit)	★ Prepare with starting switch OFF, then carry out troubleshooting without turning starting switch ON.			
			Wiring harness between EGC1 (female) (16) – NE (female) (1) and chassis ground		Resistance	Min. 1 MΩ
			Wiring harness between EGC1 (female) (48) – NE (female) (2) and chassis ground		Resistance	Min. 1 MΩ
	4	Short circuit in wiring harness (with another wiring harness)	★ Prepare with starting switch OFF, then carry out troubleshooting without turning starting switch ON.			
			Wiring harness between EGC1 (female) (16) – NE (female) (1) and between EGC1 (female) (48) – NE (female) (2)		Resistance	Min. 1 MΩ
	5	Defective engine controller	★ Prepare with starting switch OFF, then turn starting switch ON and carry out troubleshooting.			
			EGC1	Voltage		
			Between (16) – (48)	4.75 – 5.25 V		

Circuit diagram related to engine NE speed sensor

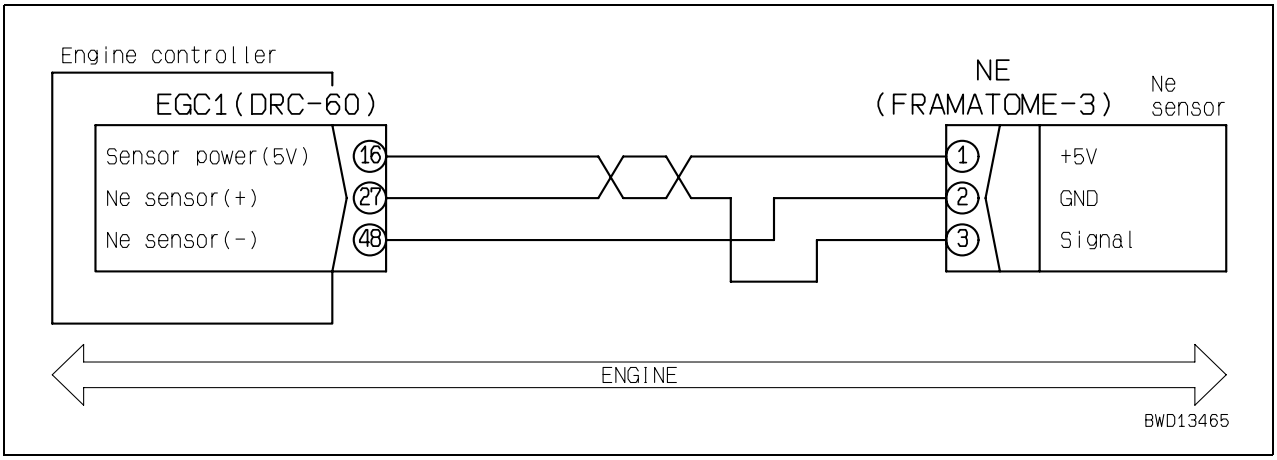

Failure code [CA263] Fuel Temp Sensor High Error

Action code	Failure code	Trouble	Fuel Temp Sensor High Error (Engine controller system)
E01	**CA263**		
Contents of trouble	• Signal voltage in fuel temperature sensor circuit is abnormally high.		
Action of controller	• Fixes fuel temperature (90 °C) and continues operation.		
Problem that appears on machine			
Related information	• State of fuel temperature sensor signal can be checked with monitoring function. (Code: 14201 Fuel Temp Sens Volt)		

	Cause		Standard value in normal state/Remarks on troubleshooting			
Possible causes and standard value in normal state	1	Defective fuel temperature sensor (Internal trouble)	★ Prepare with starting switch OFF, then carry out troubleshooting without turning starting switch ON.			
			TFUEL (male)	Fuel temperature	Resistance	
			Between (A) – (B)	10 – 100°C	0.6 – 20 kΩ	
	2	Disconnection in wiring harness (Disconnection in wiring or defective contact in connector)	★ Prepare with starting switch OFF, then carry out troubleshooting without turning starting switch ON.			
			Wiring harness between EGC1 (female) (30) – TFUEL (female) (A)		Resistance	Max. 1 Ω
			Wiring harness between EGC1 (female) (47) – TFUEL (female) (B)		Resistance	Max. 1 Ω
	3	Ground fault in wiring harness (Contact with GND circuit)	★ Prepare with starting switch OFF, then carry out troubleshooting without turning starting switch ON.			
			Wiring harness between EGC1 (female) (30) – TFUEL (female) (A) and chassis ground		Resistance	Min. 1 MΩ
	4	Defective engine controller	★ Prepare with starting switch OFF, then carry out troubleshooting without turning starting switch ON.			
			EGC1 (female)	Fuel temperature	Resistance	
			Between (30) – (47)	10 – 100°C	0.6 – 20 kΩ	

Circuit diagram related to fuel temperature sensor

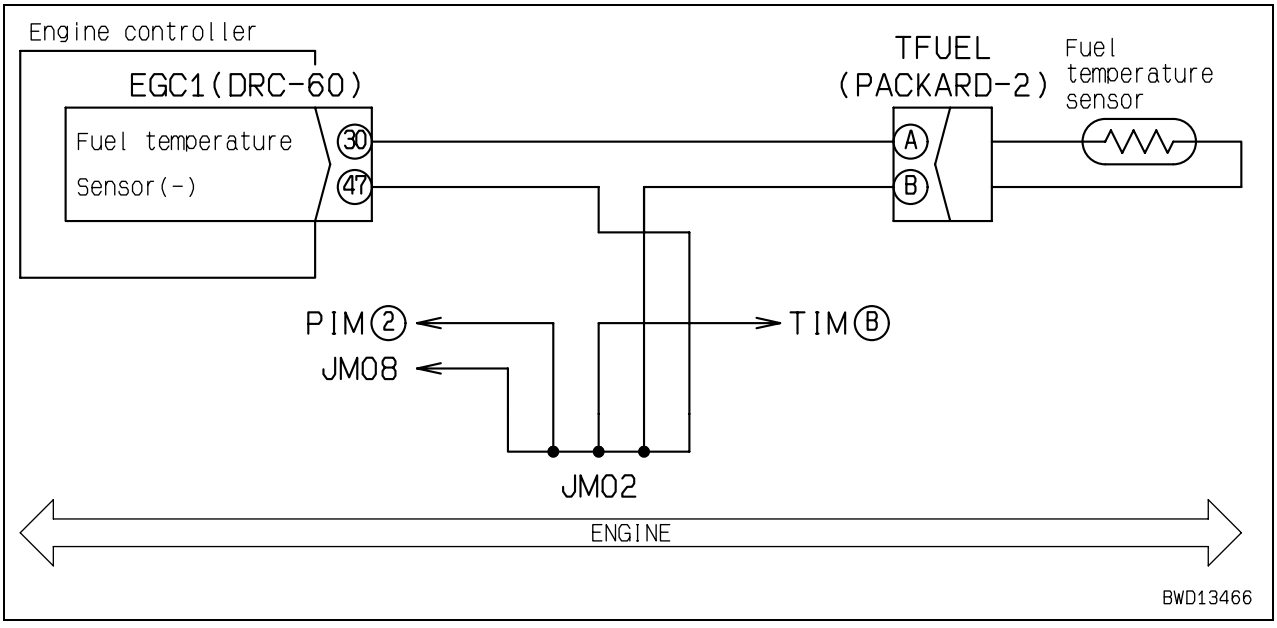

Failure code [CA265] Fuel Temp Sensor Low Error

Action code	Failure code	Trouble	Fuel Temp Sensor Low Error (Engine controller system)
E01	**CA265**		
Contents of trouble	• Signal voltage in fuel temperature sensor circuit is abnormally low.		
Action of controller	• Fixes fuel temperature (90°C) and continues operation.		
Problem that appears on machine			
Related information			

Possible causes and standard value in normal state	Cause	Standard value in normal state/Remarks on troubleshooting
	Carry out troubleshooting for failure code [**CA263**].	

Failure code [CA271] PCV1 Short Error

Action code	Failure code	Trouble	PCV1 Short Error (Engine controller system)
E03	**CA271**		
Contents of trouble	• There is short circuit in PCV1 circuit of supply pump.		
Action of controller	• None in particular.		
Problem that appears on machine			
Related information			

	Cause		Standard value in normal state/Remarks on troubleshooting			
Possible causes and standard value in normal state	1	Defective supply pump PCV1 (Internal short circuit)	★ Prepare with starting switch OFF, then carry out troubleshooting without turning starting switch ON.			
			PCV1 (male)	Resistance		
			Between (1) – (2)	2.3 – 5.3 Ω		
			Between (1), (2) – chassis ground	Min. 1 MΩ		
	2	Ground fault in wiring harness (Contact with GND circuit)	★ Prepare with starting switch OFF, then carry out troubleshooting without turning starting switch ON.			
			Wiring harness between EGC1 (female) (4) – PCV1 (female) (1) and chassis ground	Resistance	Min. 1 MΩ	
			Wiring harness between EGC1 (female) (5) – PCV1 (female) (2) and chassis ground	Resistance	Min. 1 MΩ	
	3	Hot short (Short circuit with 24V circuit) in wiring harness	★ Prepare with starting switch OFF, then turn starting switch ON and carry out troubleshooting.			
			Wiring harness between EGC1 (female) (4) – PCV1 (female) (1) and chassis ground	Voltage	Max. 1 V	
			Wiring harness between EGC1 (female) (5) – PCV1 (female) (2) and chassis ground	Voltage	Max. 1 V	
	4	Defective engine controller	★ Prepare with starting switch OFF, then carry out troubleshooting without turning starting switch ON.			
			EGC1 (female)	Resistance		
			Between (4) – (5)	2.3 – 5.3 Ω		
			Between (4), (5) – chassis ground	Min. 1 MΩ		

Circuit diagram related to supply pump PCV1

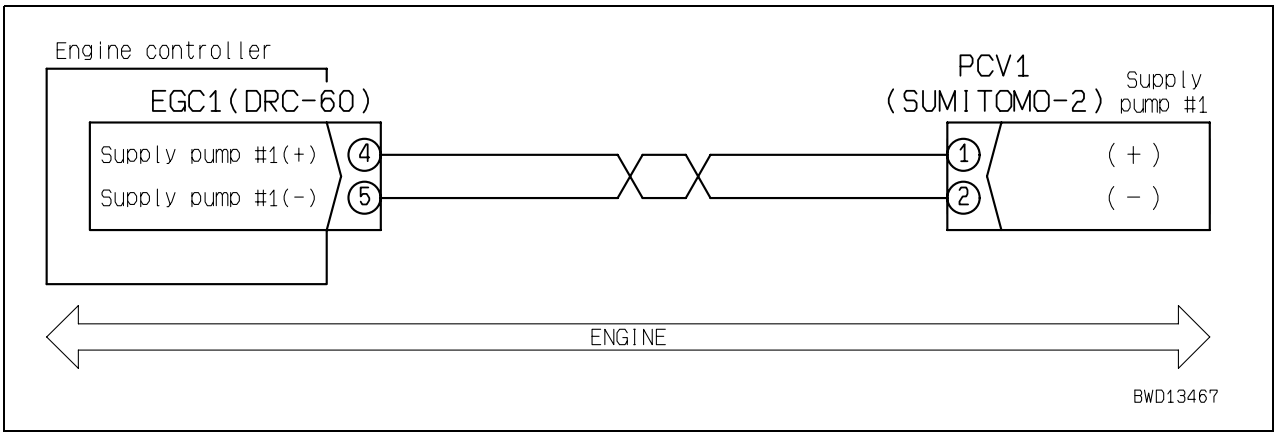

Failure code [CA272] PCV1 Open Error

Action code	Failure code	Trouble	PCV1 Open Error (Engine controller system)
E03	**CA272**		
Contents of trouble	• There is disconnection in PCV1 circuit of supply pump.		
Action of controller	• None in particular.		
Problem that appears on machine			
Related information			

	Cause		Standard value in normal state/Remarks on troubleshooting			
Possible causes and standard value in normal state	1	Defective supply pump PCV1 (Internal disconnection)	★ Prepare with starting switch OFF, then carry out troubleshooting without turning starting switch ON.			
			PCV1 (male)	Resistance		
			Between (1) – (2)	2.3 – 5.3 Ω		
			Between (1), (2) – chassis ground	Min. 1 MΩ		
	2	Disconnection in wiring harness (Disconnection in wiring or defective contact in connector)	★ Prepare with starting switch OFF, then carry out troubleshooting without turning starting switch ON.			
			Wiring harness between EGC1 (female) (4) – PCV1 (female) (1)	Resistance	Max. 1 Ω	
			Wiring harness between EGC1 (female) (5) – PCV1 (female) (2)	Resistance	Max. 1 Ω	
	3	Ground fault in wiring harness (Contact with GND circuit)	★ Prepare with starting switch OFF, then carry out troubleshooting without turning starting switch ON.			
			Wiring harness between EGC1 (female) (4) – PCV1 (female) (1) and chassis ground	Resistance	Min. 1 MΩ	
			Wiring harness between EGC1 (female) (5) – PCV1 (female) (2) and chassis ground	Resistance	Min. 1 MΩ	
	4	Defective engine controller	★ Prepare with starting switch OFF, then carry out troubleshooting without turning starting switch ON.			
			EGC1 (female)	Resistance		
			Between (4) – (5)	2.3 – 5.3 Ω		
			Between (4), (5) – chassis ground	Min. 1 MΩ		

Circuit diagram related to supply pump PCV1

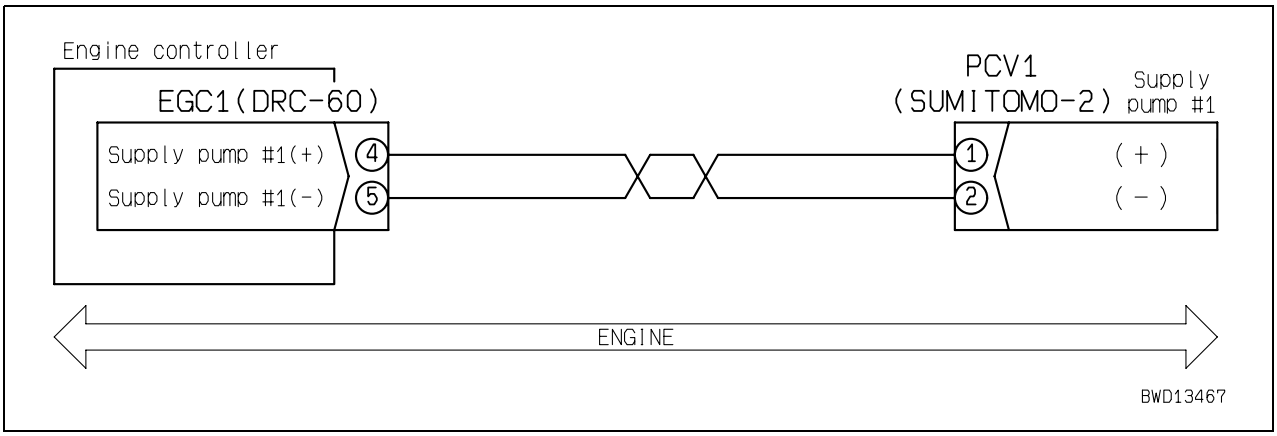

Failure code [CA273] PCV2 Short Error

Action code	Failure code	Trouble	PCV2 Short Error (Engine controller system)
E03	**CA273**		
Contents of trouble	• There is short circuit in PCV2 circuit of supply pump.		
Action of controller	• None in particular.		
Problem that appears on machine			
Related information			

	Cause		Standard value in normal state/Remarks on troubleshooting			
Possible causes and standard value in normal state	1	Defective supply pump PCV2 (Internal short circuit)	★ Prepare with starting switch OFF, then carry out troubleshooting without turning starting switch ON.			
			PCV2 (male)	Resistance		
			Between (1) – (2)	2.3 – 5.3 Ω		
			Between (1), (2) – chassis ground	Min. 1 MΩ		
	2	Ground fault in wiring harness (Contact with GND circuit)	★ Prepare with starting switch OFF, then carry out troubleshooting without turning starting switch ON.			
			Wiring harness between EGC1 (female) (9) – PCV2 (female) (1) and chassis ground	Resistance	Min. 1 MΩ	
			Wiring harness between EGC1 (female) (10) – PCV2 (female) (2) and chassis ground	Resistance	Min. 1 MΩ	
	3	Hot short (Short circuit with 24V circuit) in wiring harness	★ Prepare with starting switch OFF, then turn starting switch ON and carry out troubleshooting.			
			Wiring harness between EGC1 (female) (9) – PCV2 (female) (1) and chassis ground	Voltage	Max. 1 V	
			Wiring harness between EGC1 (female) (10) – PCV2 (female) (2) and chassis ground	Voltage	Max. 1 V	
	4	Defective engine controller	★ Prepare with starting switch OFF, then carry out troubleshooting without turning starting switch ON.			
			EGC1 (female)	Resistance		
			Between (9) – (10)	2.3 – 5.3 Ω		
			Between (9), (10) – chassis ground	Min. 1 MΩ		

Circuit diagram related to supply pump PCV2

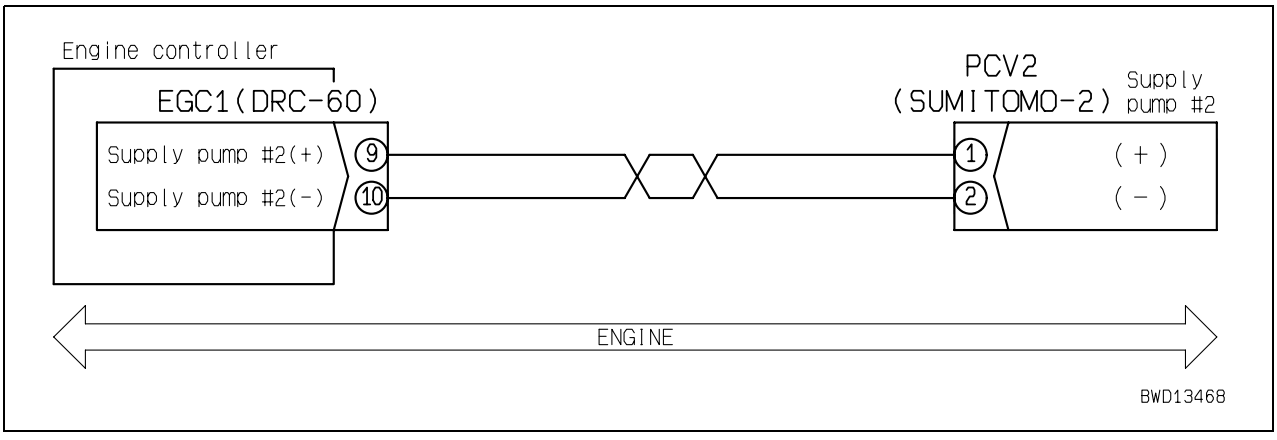

Failure code [CA274] PCV2 Open Error

Action code	Failure code	Trouble	PCV2 Open Error (Engine controller system)
E03	**CA274**		
Contents of trouble	• There is disconnection in PCV2 circuit of supply pump.		
Action of controller	• None in particular.		
Problem that appears on machine			
Related information			

	Cause		Standard value in normal state/Remarks on troubleshooting			
Possible causes and standard value in normal state	1	Defective supply pump PCV2 (Internal disconnection)	★ Prepare with starting switch OFF, then carry out troubleshooting without turning starting switch ON.			
			PCV2 (male)	Resistance		
			Between (1) – (2)	2.3 – 5.3 Ω		
			Between (1), (2) – chassis ground	Min. 1 MΩ		
	2	Disconnection in wiring harness (Disconnection in wiring or defective contact in connector)	★ Prepare with starting switch OFF, then carry out troubleshooting without turning starting switch ON.			
			Wiring harness between EGC1 (female) (9) – PCV2 (female) (1)	Resistance	Max. 1 Ω	
			Wiring harness between EGC1 (female) (10) – PCV2 (female) (2)	Resistance	Max. 1 Ω	
	3	Ground fault in wiring harness (Contact with GND circuit)	★ Prepare with starting switch OFF, then carry out troubleshooting without turning starting switch ON.			
			Wiring harness between EGC1 (female) (9) – PCV2 (female) (1) and chassis ground	Resistance	Min. 1 MΩ	
			Wiring harness between EGC1 (female) (10) – PCV2 (female) (2) and chassis ground	Resistance	Min. 1 MΩ	
	4	Defective engine controller	★ Prepare with starting switch OFF, then carry out troubleshooting without turning starting switch ON.			
			EGC1 (female)	Resistance		
			Between (9) – (10)	2.3 – 5.3 Ω		
			Between (9), (10) – chassis ground	Min. 1 MΩ		

Circuit diagram related to supply pump PCV2

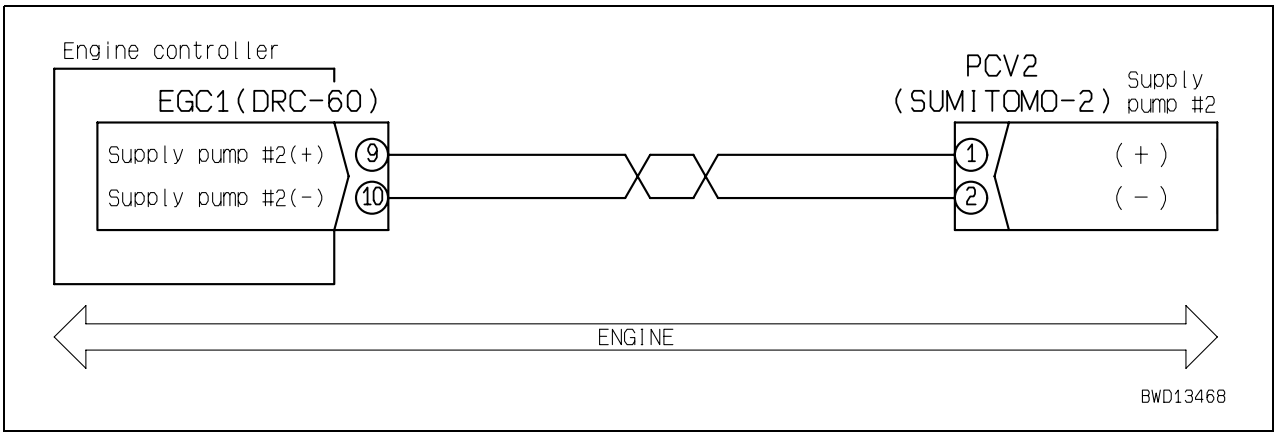

Failure code [CA322] Inj #1 (L#1) Open/Short Error

Action code	Failure code	Trouble	Inj #1 (L#1) Open/Short Error (Engine controller system)
E03	**CA322**		
Contents of trouble	• There is disconnection or short circuit in injector #1 circuit.		
Action of controller	• None in particular.		
Problem that appears on machine	• Output drops. • Rotation is unstable.		
Related information			

	Cause		Standard value in normal state/Remarks on troubleshooting			
Possible causes and standard value in normal state	1	Defective injector #1 (Internal trouble)	★ Prepare with starting switch OFF, then carry out troubleshooting without turning starting switch ON.			
			CN1 (male)	Resistance		
			Between (1) – (2)	0.4 – 1.1 Ω		
			Between (1), (2) – chassis ground	Min. 1 MΩ		
	2	Disconnection in wiring harness (Disconnection in wiring or defective contact in connector)	★ Prepare with starting switch OFF, then carry out troubleshooting without turning starting switch ON.			
			Wiring harness between EGC1 (female) (45) – CN1 (female) (1)	Resistance	Max. 1 Ω	
			Wiring harness between EGC1 (female) (53) – CN1 (female) (2)	Resistance	Max. 1 Ω	
	3	Ground fault in wiring harness (Contact with GND circuit)	★ Prepare with starting switch OFF, then carry out troubleshooting without turning starting switch ON.			
			Wiring harness between EGC1 (female) (45) – CN1 (female) (1) and chassis ground	Resistance	Min. 1 MΩ	
			Wiring harness between EGC1 (female) (53) – CN1 (female) (2) and chassis ground	Resistance	Min. 1 MΩ	
	4	Defective engine controller	★ Prepare with starting switch OFF, then carry out troubleshooting without turning starting switch ON.			
			EGC1 (female)	Resistance		
			Between (45) – (53)	0.4 – 1.1 Ω		
			Between (45), (53) – chassis ground	Min. 1 MΩ		

Circuit diagram related to injector #1

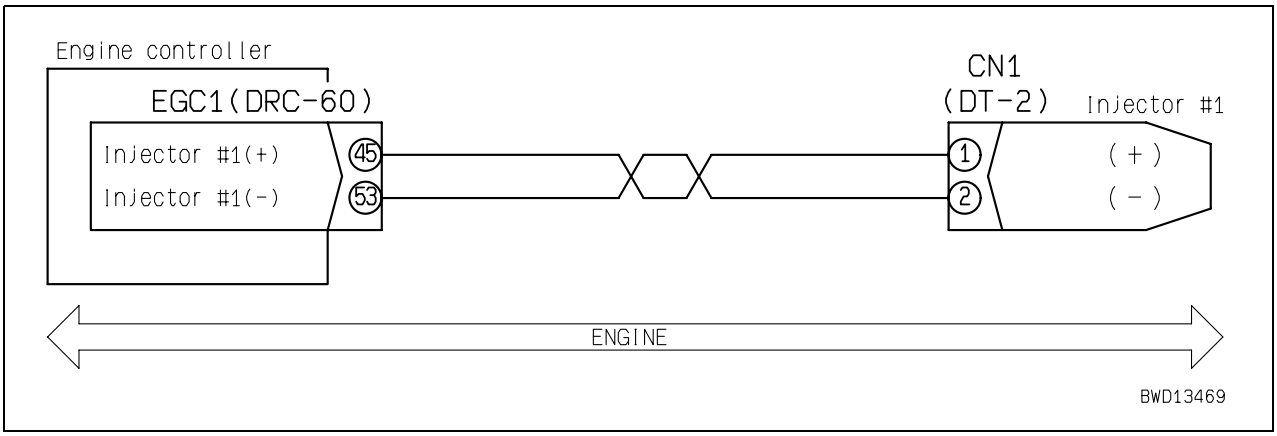

Failure code [CA323] Inj #5 (L#5) Open/Short Error

Action code	Failure code	Trouble	Inj #5 (L#5) Open/Short Error (Engine controller system)
E03	**CA323**		
Contents of trouble	• There is disconnection or short circuit in injector #5 circuit.		
Action of controller	• None in particular.		
Problem that appears on machine	• Output drops. • Rotation is unstable.		
Related information			

	Cause		Standard value in normal state/Remarks on troubleshooting			
Possible causes and standard value in normal state	1	Defective injector #5 (Internal trouble)	★ Prepare with starting switch OFF, then carry out troubleshooting without turning starting switch ON.			
			CN5 (male)	Resistance		
			Between (1) – (2)	0.4 – 1.1 Ω		
			Between (1), (2) – chassis ground	Min. 1 MΩ		
	2	Disconnection in wiring harness (Disconnection in wiring or defective contact in connector)	★ Prepare with starting switch OFF, then carry out troubleshooting without turning starting switch ON.			
			Wiring harness between EGC1 (female) (46) – CN5 (female) (1)	Resistance	Max. 1 Ω	
			Wiring harness between EGC1 (female) (60) – CN5 (female) (2)	Resistance	Max. 1 Ω	
	3	Ground fault in wiring harness (Contact with GND circuit)	★ Prepare with starting switch OFF, then carry out troubleshooting without turning starting switch ON.			
			Wiring harness between EGC1 (female) (46) – CN5 (female) (1) and chassis ground	Resistance	Min. 1 MΩ	
			Wiring harness between EGC1 (female) (60) – CN5 (female) (2) and chassis ground	Resistance	Min. 1 MΩ	
	4	Defective engine controller	★ Prepare with starting switch OFF, then carry out troubleshooting without turning starting switch ON.			
			EGC1 (female)	Resistance		
			Between (46) – (60)	0.4 – 1.1 Ω		
			Between (46), (60) – chassis ground	Min. 1 MΩ		

Circuit diagram related to injector #5

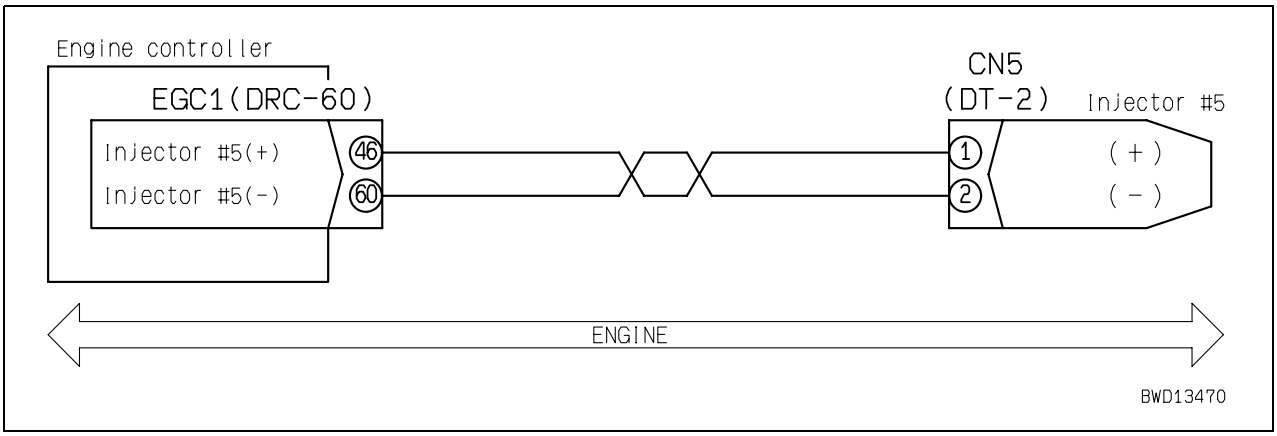

Failure code [CA324] Inj #3 (L#3) Open/Short Error

Action code	Failure code	Trouble	Inj #3 (L#3) Open/Short Error (Engine controller system)
E03	**CA324**		
Contents of trouble	• There is disconnection or short circuit in injector #3 circuit.		
Action of controller	• None in particular.		
Problem that appears on machine	• Output drops. • Rotation is unstable.		
Related information			

	Cause		Standard value in normal state/Remarks on troubleshooting			
Possible causes and standard value in normal state	1	Defective injector #3 (Internal trouble)	★ Prepare with starting switch OFF, then carry out troubleshooting without turning starting switch ON.			
			CN3 (male)	Resistance		
			Between (1) – (2)	0.4 – 1.1 Ω		
			Between (1), (2) – chassis ground	Min. 1 MΩ		
	2	Disconnection in wiring harness (Disconnection in wiring or defective contact in connector)	★ Prepare with starting switch OFF, then carry out troubleshooting without turning starting switch ON.			
			Wiring harness between EGC1 (female) (55) – CN3 (female) (1)	Resistance	Max. 1 Ω	
			Wiring harness between EGC1 (female) (52) – CN3 (female) (2)	Resistance	Max. 1 Ω	
	3	Ground fault in wiring harness (Contact with GND circuit)	★ Prepare with starting switch OFF, then carry out troubleshooting without turning starting switch ON.			
			Wiring harness between EGC1 (female) (55) – CN3 (female) (1) and chassis ground	Resistance	Min. 1 MΩ	
			Wiring harness between EGC1 (female) (52) – CN3 (female) (2) and chassis ground	Resistance	Min. 1 MΩ	
	4	Defective engine controller	★ Prepare with starting switch OFF, then carry out troubleshooting without turning starting switch ON.			
			EGC1 (female)	Resistance		
			Between (55) – (52)	0.4 – 1.1 Ω		
			Between (55), (52) – chassis ground	Min. 1 MΩ		

Circuit diagram related to injector #3

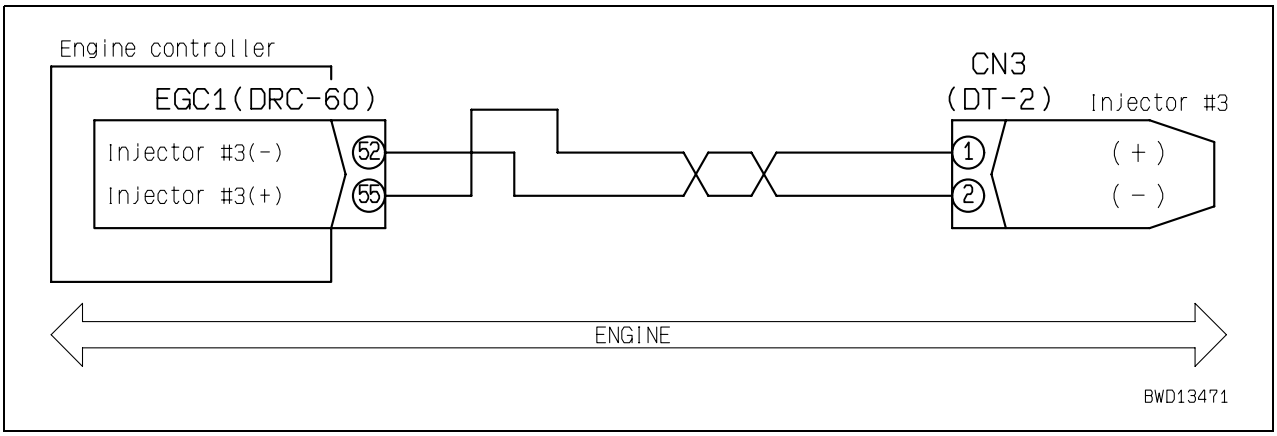

Failure code [CA325] Inj #6 (L#6) Open/Short Error

Action code	Failure code	Trouble	Inj #6 (L#6) Open/Short Error (Engine controller system)
E03	**CA325**		
Contents of trouble	• There is disconnection or short circuit in injector #6 circuit.		
Action of controller	• None in particular.		
Problem that appears on machine	• Output drops. • Rotation is unstable.		
Related information			

	Cause		Standard value in normal state/Remarks on troubleshooting			
Possible causes and standard value in normal state	1	Defective injector #6 (Internal trouble)	★ Prepare with starting switch OFF, then carry out troubleshooting without turning starting switch ON.			
			CN6 (male)	Resistance		
			Between (1) – (2)	0.4 – 1.1 Ω		
			Between (1), (2) – chassis ground	Min. 1 MΩ		
	2	Disconnection in wiring harness (Disconnection in wiring or defective contact in connector)	★ Prepare with starting switch OFF, then carry out troubleshooting without turning starting switch ON.			
			Wiring harness between EGC1 (female) (57) – CN6 (female) (1)	Resistance	Max. 1 Ω	
			Wiring harness between EGC1 (female) (59) – CN6 (female) (2)	Resistance	Max. 1 Ω	
	3	Ground fault in wiring harness (Contact with GND circuit)	★ Prepare with starting switch OFF, then carry out troubleshooting without turning starting switch ON.			
			Wiring harness between EGC1 (female) (57) – CN6 (female) (1) and chassis ground	Resistance	Min. 1 MΩ	
			Wiring harness between EGC1 (female) (59) – CN6 (female) (2) and chassis ground	Resistance	Min. 1 MΩ	
	4	Defective engine controller	★ Prepare with starting switch OFF, then carry out troubleshooting without turning starting switch ON.			
			EGC1 (female)	Resistance		
			Between (57) – (59)	0.4 – 1.1 Ω		
			Between (57), (59) – chassis ground	Min. 1 MΩ		

Circuit diagram related to injector #6

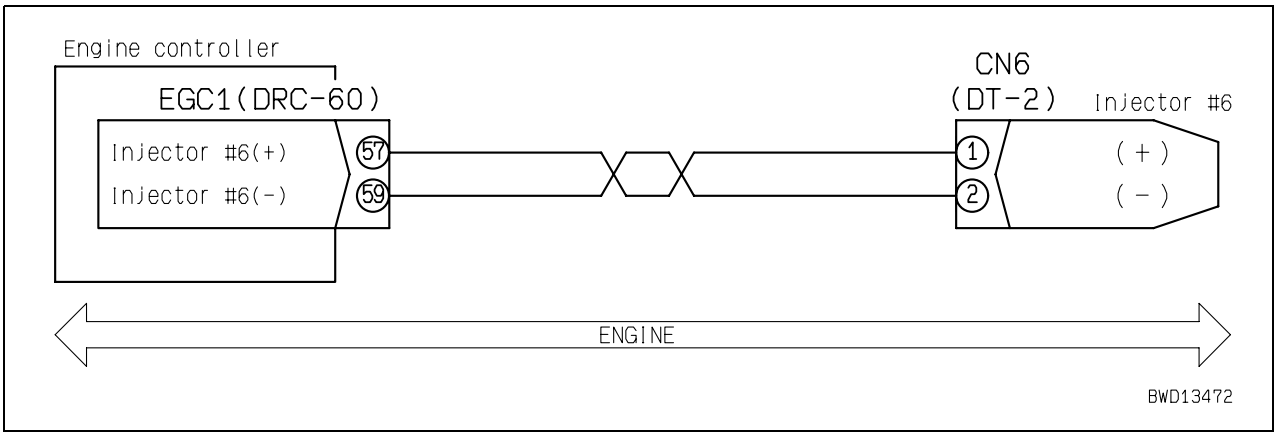

Failure code [CA331] Inj #2 (L#2) Open/Short Error

Action code	Failure code	Trouble	Inj #2 (L#2) Open/Short Error (Engine controller system)
E03	**CA331**		
Contents of trouble	• There is disconnection or short circuit in injector #2 circuit.		
Action of controller	• None in particular.		
Problem that appears on machine	• Output drops. • Rotation is unstable.		
Related information			

	Cause		Standard value in normal state/Remarks on troubleshooting			
Possible causes and standard value in normal state	1	Defective injector #2 (Internal trouble)	★ Prepare with starting switch OFF, then carry out troubleshooting without turning starting switch ON.			
			CN2 (male)	Resistance		
			Between (1) – (2)	0.4 – 1.1 Ω		
			Between (1), (2) – chassis ground	Min. 1 MΩ		
	2	Disconnection in wiring harness (Disconnection in wiring or defective contact in connector)	★ Prepare with starting switch OFF, then carry out troubleshooting without turning starting switch ON.			
			Wiring harness between EGC1 (female) (54) – CN2 (female) (1)	Resistance	Max. 1 Ω	
			Wiring harness between EGC1 (female) (51) – CN2 (female) (2)	Resistance	Max. 1 Ω	
	3	Ground fault in wiring harness (Contact with GND circuit)	★ Prepare with starting switch OFF, then carry out troubleshooting without turning starting switch ON.			
			Wiring harness between EGC1 (female) (54) – CN2 (female) (1) and chassis ground	Resistance	Min. 1 MΩ	
			Wiring harness between EGC1 (female) (51) – CN2 (female) (2) and chassis ground	Resistance	Min. 1 MΩ	
	4	Defective engine controller	★ Prepare with starting switch OFF, then carry out troubleshooting without turning starting switch ON.			
			EGC1 (female)	Resistance		
			Between (54) – (51)	0.4 – 1.1 Ω		
			Between (54), (51) – chassis ground	Min. 1 MΩ		

Circuit diagram related to injector #2

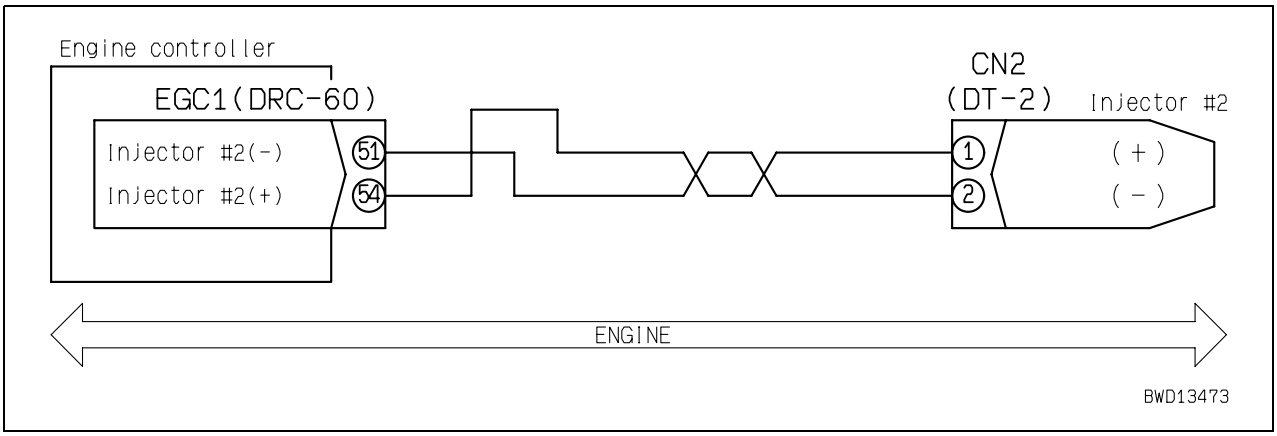

Failure code [CA332] Inj #4 (L#4) Open/Short Error

Action code	Failure code	Trouble	Inj #4 (L#4) Open/Short Error (Engine controller system)
E03	**CA332**		
Contents of trouble	• There is disconnection or short circuit in injector #4 circuit.		
Action of controller	• None in particular.		
Problem that appears on machine	• Output drops. • Rotation is unstable.		
Related information			

	Cause		Standard value in normal state/Remarks on troubleshooting			
Possible causes and standard value in normal state	1	Defective injector #4 (Internal trouble)	★ Prepare with starting switch OFF, then carry out troubleshooting without turning starting switch ON.			
			CN4 (male)	Resistance		
			Between (1) – (2)	0.4 – 1.1 Ω		
			Between (1), (2) – chassis ground	Min. 1 MΩ		
	2	Disconnection in wiring harness (Disconnection in wiring or defective contact in connector)	★ Prepare with starting switch OFF, then carry out troubleshooting without turning starting switch ON.			
			Wiring harness between EGC1 (female) (56) – CN4 (female) (1)	Resistance	Max. 1 Ω	
			Wiring harness between EGC1 (female) (58) – CN4 (female) (2)	Resistance	Max. 1 Ω	
	3	Ground fault in wiring harness (Contact with GND circuit)	★ Prepare with starting switch OFF, then carry out troubleshooting without turning starting switch ON.			
			Wiring harness between EGC1 (female) (56) – CN4 (female) (1) and chassis ground	Resistance	Min. 1 MΩ	
			Wiring harness between EGC1 (female) (58) – CN4 (female) (2) and chassis ground	Resistance	Min. 1 MΩ	
	4	Defective engine controller	★ Prepare with starting switch OFF, then carry out troubleshooting without turning starting switch ON.			
			EGC1 (female)	Resistance		
			Between (56) – (58)	0.4 – 1.1 Ω		
			Between (56), (58) – chassis ground	Min. 1 MΩ		

Circuit diagram related to injector #4

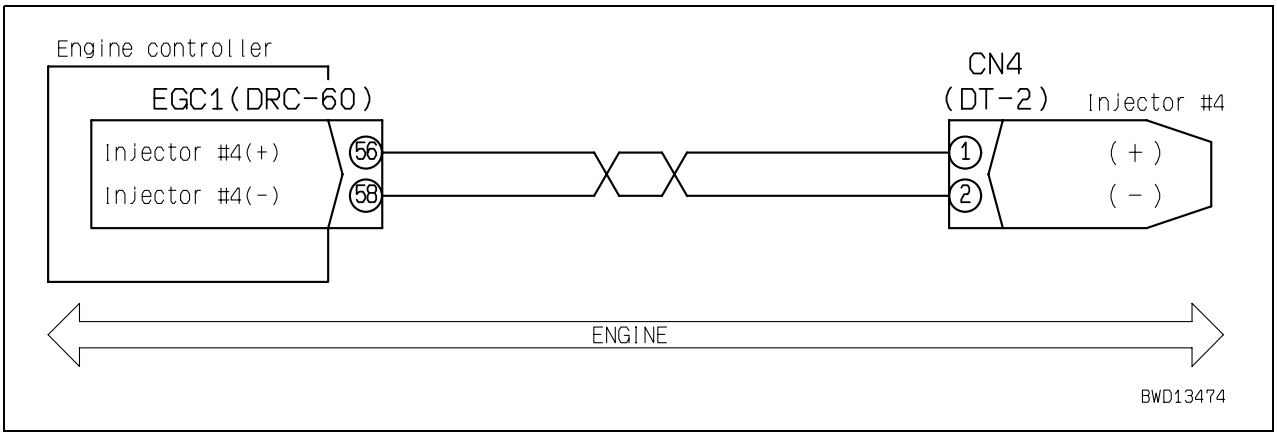

Failure code [CA342] Calibration Code Incompatibility

Action code	Failure code	Trouble	Calibration Code Incompatibility (Engine controller system)
E04	**CA342**		
Contents of trouble	• Incompatibility occurred in engine controller data.		
Action of controller	• None in particular.		
Problem that appears on machine	• Engine continues operation normally, but it may stop during operation or may not be able to start.		
Related information			

Possible causes and standard value in normal state	Cause	Standard value in normal state/Remarks on troubleshooting
	Carry out troubleshooting for failure code [**CA111**].	

Failure code [CA351] Injectors Drive Circuit Error

Action code	Failure code	Trouble	Injectors Drive Circuit Error (Engine controller system)
E03	**CA351**		
Contents of trouble	• Trouble occurred in injector drive circuit.		
Action of controller	• Limits engine output and continues operation (Limits common rail pressure).		
Problem that appears on machine	• Engine output drops.		
Related information	• Source voltage of engine controller can be checked with monitoring function. (Code: 03203 Battery Power Supply)		

	Cause		Standard value in normal state/Remarks on troubleshooting		
Possible causes and standard value in normal state	1	Defective related system	If another failure code (failure code of trouble in injector system) is indicated, carry out troubleshooting for it.		
	2	Defective circuit breaker (CB30 or CB8)	If circuit breaker is turned OFF, circuit probably has ground fault (See cause 4).		
	3	Disconnection in wiring harness (Disconnection in wiring or defective contact in connector)	★ Prepare with starting switch OFF, then carry out troubleshooting without turning starting switch ON.		
			Wiring harness between EGC3 (female) (3), (4) – CB8 (2)	Resistance	Max. 1 Ω
			Wiring harness between CB8 (1) – CB30 (B30S)	Resistance	Max. 1 Ω
			Wiring harness between CB30 (B30L) – terminal BRB	Resistance	Max. 1 Ω
			Wiring harness between EGC3 (female) (1), (2) – chassis ground (GND20)	Resistance	Max. 1 Ω
	4	Ground fault in wiring harness (Contact with GND circuit)	★ Prepare with starting switch OFF, then carry out troubleshooting without turning starting switch ON.		
			Wiring harness between EGC3 (female) (3), (4) – CB8 (2) and chassis ground	Resistance	Min. 1 MΩ
			Wiring harness between CB8 (1) – CB30 (B30S) or circuit branch end and chassis ground	Resistance	Min. 1 MΩ
			Wiring harness between CB30 (B30L) – terminal BRB and chassis ground	Resistance	Min. 1 MΩ
			Wiring harness between EGC3 (female) (1), (2) – chassis ground (GND20) and chassis ground	Resistance	Min. 1 MΩ
	5	Defective engine controller	★ Prepare with starting switch OFF, then turn starting switch ON and carry out troubleshooting.		
			EGC3	Voltage	
			Between (3), (4) – (1), (2)	20 – 30 V	

Circuit diagram related to engine controller power supply

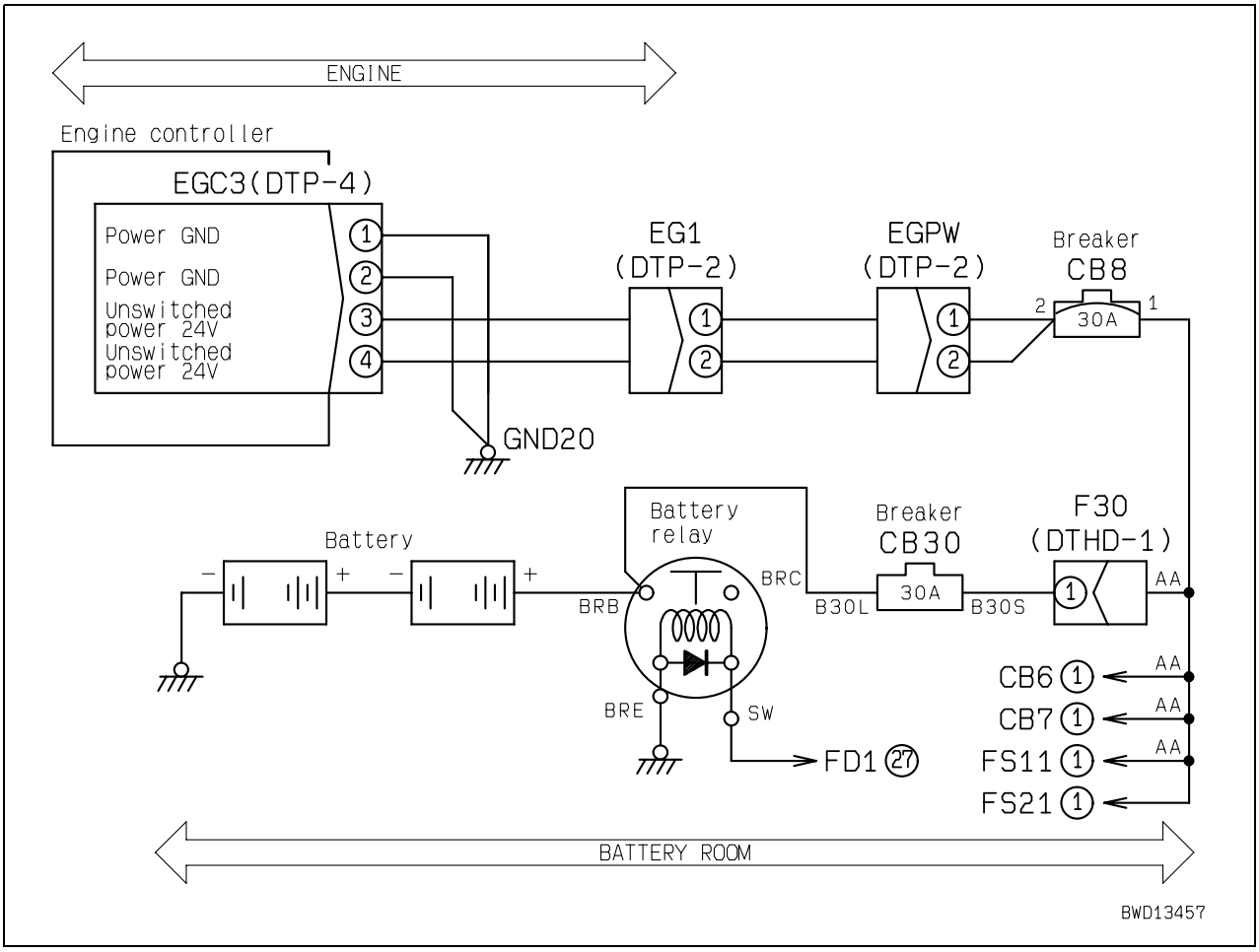

Failure code [CA352] Sens Supply 1 Volt Low Error

Action code	Failure code	Trouble	Sens Supply 1 Volt Low Error (Engine controller system)
E03	**CA352**		
Contents of trouble	• Signal voltage in sensor power supply 1 (5 V) circuit of engine controller is abnormally low.		
Action of controller	• Limits common rail pressure sensor output and continues operation (Limits common rail pressure).		
Problem that appears on machine	• Engine output drops.		
Related information			

Possible causes and standard value in normal state	Cause	Standard value in normal state/Remarks on troubleshooting
	Carry out troubleshooting for failure code [**CA386**].	

Failure code [CA386] Sens Supply 1 Volt High Error

Action code	Failure code	Trouble	Sens Supply 1 Volt High Error (Engine controller system)
E03	**CA386**		
Contents of trouble	• Signal voltage in sensor power supply (5 V) circuit is abnormally high.		
Action of controller	• Limits common rail pressure sensor output and continues operation (Limits common rail pressure).		
Problem that appears on machine	• Engine output drops.		
Related information			

	Cause		Standard value in normal state/Remarks on troubleshooting			
Possible causes and standard value in normal state	1	Defective related system	If another failure code is indicated, carry out troubleshooting for it.			
	2	Defective sensor (Internal trouble)	★ Prepare with starting switch OFF, then turn starting switch ON and carry out troubleshooting.			
			Disconnect devices at right in order. If "E" of failure code disappears when a device is disconnected, that device has trouble in it.	Common rail pressure sensor	PFUEL connector	
	3	Disconnection in wiring harness (Disconnection in wiring or defective contact in connector)	★ Prepare with starting switch OFF, then carry out troubleshooting without turning starting switch ON.			
			Wiring harness between EGC1 (female) (33) – PFUEL (female) (1)		Resistance	Max. 1 Ω
			Wiring harness between EGC1 (female) (47) – PFUEL (female) (3)		Resistance	Max. 1 Ω
	4	Ground fault in wiring harness (Contact with GND circuit)	★ Prepare with starting switch OFF, then carry out troubleshooting without turning starting switch ON.			
			Wiring harness between EGC1 (female) (33) – PFUEL (female) (1) and chassis ground		Resistance	Min. 1 MΩ
			Wiring harness between EGC1 (female) (47) – PFUEL (female) (3) and chassis ground		Resistance	Min. 1 MΩ
	5	Short circuit in wiring harness (with another wiring harness)	★ Prepare with starting switch OFF, then carry out troubleshooting without turning starting switch ON.			
			Wiring harness between EGC1 (female) (33) – PFUEL (female) (1) and between EGC1 (female) (47) – PFUEL (female) (3)		Resistance	Min. 1 MΩ
	6	Defective engine controller	★ Prepare with starting switch OFF, then turn starting switch ON and carry out troubleshooting.			
			EGC1	Voltage		
			Between (33) – (47)	4.75 – 5.25 Ω		

Circuit diagram related to engine controller sensor power supply 1 (5 V)

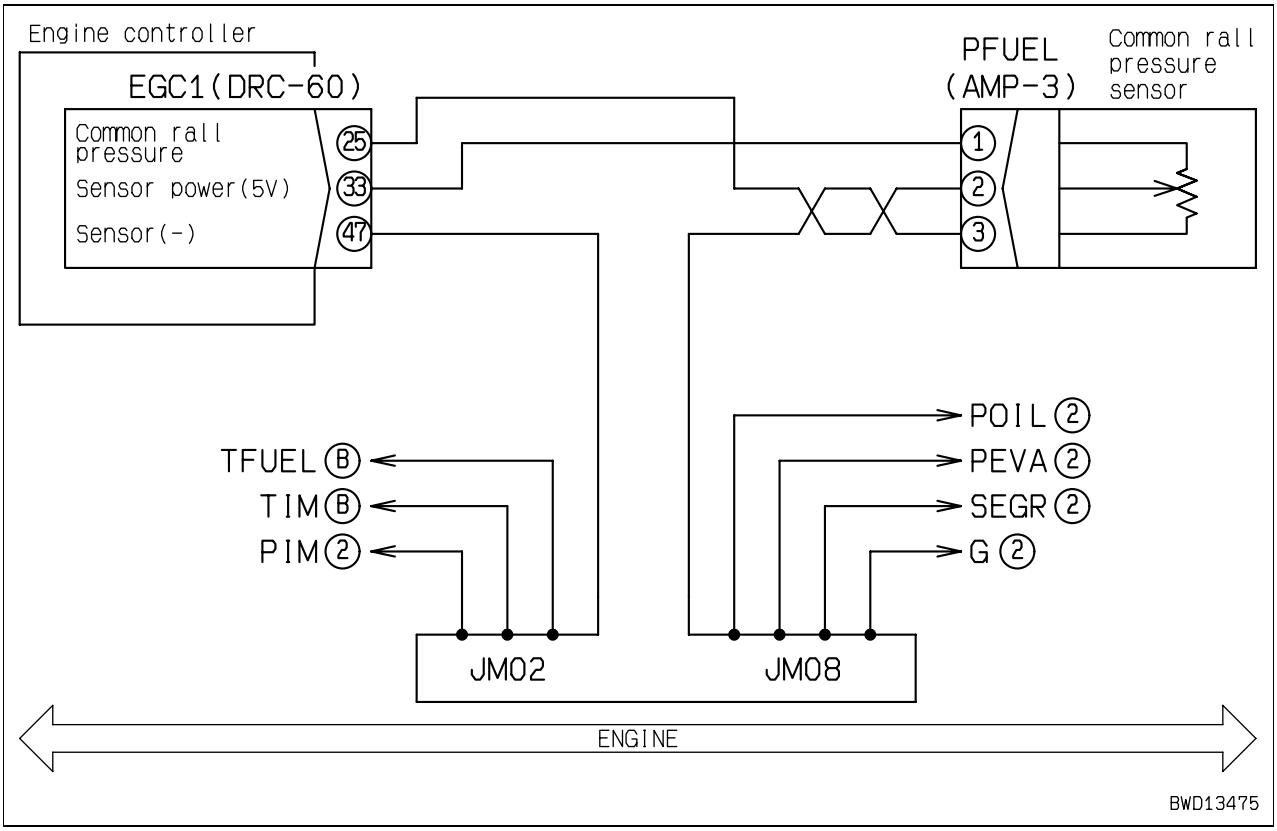

Failure code [CA441] Battery Voltage Low Error

Action code	Failure code	Trouble	Battery Voltage Low Error (Engine controller system)
E04	**CA441**		
Contents of trouble	• Power supply circuit voltage of engine controller is abnormally low.		
Action of controller	• None in particular.		
Problem that appears on machine	• Engine continues operation normally, but it may stop during operation or may not be able to start.		
Related information	• Source voltage of engine controller can be checked with monitoring function. (Code: 03203 Battery Power Supply)		

Possible causes and standard value in normal state	Cause	Standard value in normal state/Remarks on troubleshooting
	Carry out troubleshooting for failure code [**CA111**].	

Failure code [CA442] Battery Voltage High Error

Action code	Failure code	Trouble	Battery Voltage High Error (Engine controller system)
E04	**CA442**		
Contents of trouble	• Power supply circuit voltage of engine controller is abnormally low.		
Action of controller	• None in particular.		
Problem that appears on machine	• Engine continues operation normally, but it may stop during operation or may not be able to start.		
Related information	• Source voltage of engine controller can be checked with monitoring function. (Code: 03203 Battery Power Supply)		

Possible causes and standard value in normal state	Cause	Standard value in normal state/Remarks on troubleshooting
	Carry out troubleshooting for failure code [**CA111**].	

Failure code [CA449] Rail Press Very High Error

Action code	Failure code	Trouble	Rail Press Very High Error (Engine controller system)
E03	**CA449**		
Contents of trouble	• Common rail pressure sensor circuit detected abnormally high pressure (level 2).		
Action of controller	• Limits engine output and continues operation (Limits common rail pressure).		
Problem that appears on machine	• Engine output drops.		
Related information	• Common rail pressure can be checked with monitoring function. • (Code: 36400 Rail Pressure)		

Possible causes and standard value in normal state	Cause	Standard value in normal state/Remarks on troubleshooting
	Carry out troubleshooting for failure code [**CA553**].	

Failure code [CA451] Rail Press Sensor High Error

Action code	Failure code	Trouble	Rail Press Sensor High Error (Engine controller system)
E03	**CA451**		
Contents of trouble	• Signal voltage in common rail pressure sensor circuit is abnormally high.		
Action of controller	• Limits engine output and continues operation (Limits common rail pressure).		
Problem that appears on machine	• Engine output drops.		
Related information	• State of common rail pressure sensor signal can be checked with monitoring function. (Code: 36401 Rail Pressure Sens Volt)		

	Cause		Standard value in normal state/Remarks on troubleshooting			
Possible causes and standard value in normal state	1	Defective sensor power supply system	If code [**CA352**] or [**CA386**] is indicated, carry out troubleshooting for it first.			
	2	Defective common rail pressure sensor (Internal trouble)	★ Prepare with starting switch OFF, then turn starting switch ON or start engine and carry out troubleshooting.			
			PFUEL		Voltage	
			Between (1) – (3)	Power supply	4.75 – 5.25 V	
			Between (2) – (3)	Signal	0.26 – 4.6 V	
			Sensor voltage is measured with wiring harness connected. Accordingly, if voltage is abnormal, check wiring harness and controller, too, for another cause of trouble, and then judge.			
	3	Disconnection in wiring harness (Disconnection in wiring or defective contact in connector)	★ Prepare with starting switch OFF, then carry out troubleshooting without turning starting switch ON.			
			Wiring harness between EGC1 (female) (33) – PFUEL (female) (1)		Resistance	Max. 1 Ω
			Wiring harness between EGC1 (female) (25) – PFUEL (female) (2)		Resistance	Max. 1 Ω
			Wiring harness between EGC1 (female) (47) – PFUEL (female) (3)		Resistance	Max. 1 Ω
	4	Ground fault in wiring harness (Contact with GND circuit)	★ Prepare with starting switch OFF, then carry out troubleshooting without turning starting switch ON.			
			Wiring harness between EGC1 (female) (33) – PFUEL (female) (1) and chassis ground		Resistance	Min. 1 MΩ
			Wiring harness between EGC1 (female) (25) – PFUEL (female) (2) and chassis ground		Resistance	Min. 1 MΩ
			Wiring harness between EGC1 (female) (47) – PFUEL (female) (3) and chassis ground		Resistance	Min. 1 MΩ
	5	Short circuit in wiring harness (with another wiring harness)	★ Prepare with starting switch OFF, then carry out troubleshooting without turning starting switch ON.			
			Wiring harness between EGC1 (female) (33) – PFUEL (female) (1) and between EGC1 (female) (25) – PFUEL (female) (2)		Resistance	Min. 1 MΩ
			Wiring harness between EGC1 (female) (33) – PFUEL (female) (1) and between EGC1 (female) (47) – PFUEL (female) (3)		Resistance	Min. 1 MΩ
			Wiring harness between EGC1 (female) (25) – PFUEL (female) (2) and between EGC1 (female) (47) – PFUEL (female) (3)		Resistance	Min. 1 MΩ

Possible causes and standard value in normal state	Cause		Standard value in normal state/Remarks on troubleshooting	
	6	Defective engine controller	★ Prepare with starting switch OFF, then turn starting switch ON or start engine and carry out troubleshooting.	
			EGC1	Voltage
			Between (33) – (47)	4.75 – 5.25 V
			Between (25) – (47)	0.26 – 4.6 V

Circuit diagram related to common rail pressure sensor

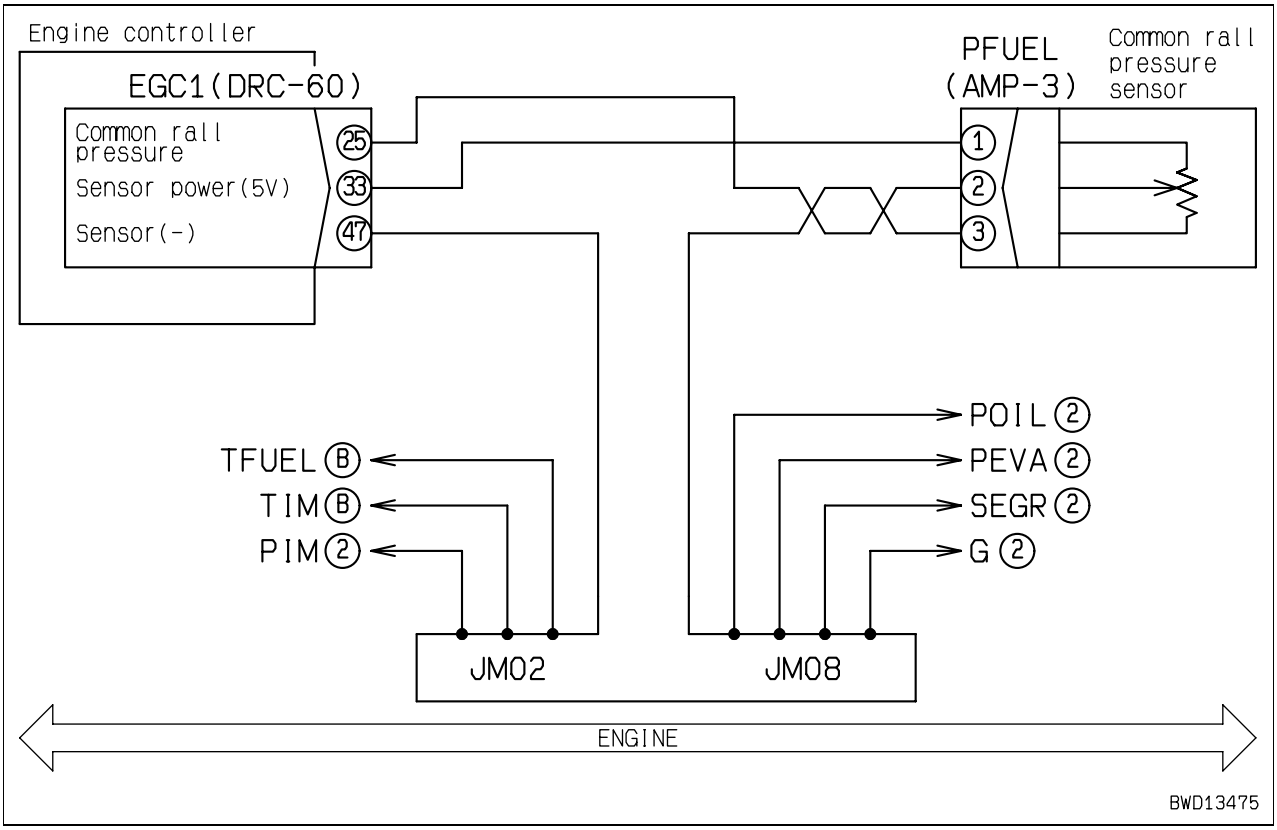

Failure code [CA452] Rail Press Sensor Low Error

Action code	Failure code	Trouble	Rail Press Sensor Low Error (Engine controller system)
E03	**CA452**		
Contents of trouble	• Signal voltage in common rail pressure sensor circuit is abnormally low.		
Action of controller	• Limits engine output and continues operation (Limits common rail pressure).		
Problem that appears on machine	• Engine output drops.		
Related information	• State of common rail pressure sensor signal can be checked with monitoring function. (Code: 36401 Rail Pressure Sens Volt)		

Possible causes and standard value in normal state	Cause	Standard value in normal state/Remarks on troubleshooting
	Carry out troubleshooting for failure code [**CA451**].	

Failure code [CA553] Rail Press High Error

Action code	Failure code	Trouble	Rail Press High Error (Engine controller system)
E02	**CA553**		
Contents of trouble	• Common rail pressure sensor circuit detected abnormally high pressure (level 1).		
Action of controller	• None in particular.		
Problem that appears on machine	• Engine output drops.		
Related information	• Common rail pressure can be checked with monitoring function. (Code: 36400 Rail Pressure)		

Possible causes and standard value in normal state		Cause	Standard value in normal state/Remarks on troubleshooting
	1	Defective related system	If another failure code is indicated, carry out troubleshooting for it.
	2	Use of improper fuel	Check fuel used directly (for high viscosity).
	3	Defective electrical system of common rail pressure sensor	Common rail pressure sensor may have electric trouble. Carry out troubleshooting for failure code [**CA451**].
	4	Defective mechanical system of common rail pressure sensor	Check mechanical system of common rail pressure sensor directly.
	5	Defective overflow valve	Check overflow valve directly for broken spring, worn seat, and stuck ball.
	6	Clogging of overflow piping	Check overflow piping directly for clogging.
	7	Defective pressure limiter	Check pressure limiter directly for mechanical defect.

Failure code [CA554] Rail Press Sensor In Range Error

Action code	Failure code	Trouble	Rail Press Sensor In Range Error (Engine controller system)
E03	**CA554**		
Contents of trouble	• In-range error occurred in common rail pressure sensor circuit.		
Action of controller	• Limits engine output and continues operation (Limits common rail pressure).		
Problem that appears on machine	• Engine output drops.		
Related information	• State of common rail pressure sensor signal can be checked with monitoring function. (Code: 36401 Rail Pressure Sens Volt)		

Possible causes and standard value in normal state	Cause	Standard value in normal state/Remarks on troubleshooting
	Carry out troubleshooting for Failure code [**CA451**].	

Failure code [CA559] Rail Press Low Error

Action code	Failure code	Trouble	Rail Press Low Error (Engine controller system)
E02	**CA559**		
Contents of trouble	• Supply pump does not feed fuel (level 1).		
Action of controller	• Limits common rail pressure.		
Problem that appears on machine	• Engine output drops.		
Related information	• Common rail pressure can be checked with monitoring function. (Code: 36400 Rail Pressure)		

	Cause		Standard value in normal state/Remarks on troubleshooting	
Possible causes and standard value in normal state	1	Defective related system	If another failure code is indicated, carry out troubleshooting for it.	
	2	Use of improper fuel	Check fuel used directly for improper quality.	
	3	Defective low-pressure circuit device	★ For contents of troubleshooting, see Note 1. For check of pressure in fuel low-pressure circuit, see Testing and adjusting, Testing fuel pressure.	
			Pressure in fuel low-pressure circuit (high idle)	Min. 0.15 MPa {Min. 1.5 kg/cm^2}
	4	Clogging of filter/strainer	★ For contents of troubleshooting, see Note 2.	
	5	Defective electrical system of supply pump PCV	Supply pump PCV may have electric trouble. Carry out troubleshooting for following codes; [**CA271**], [**CA272**], [**CA273**], [**CA274**].	
	6	Defective common rail pressure sensor	Common rail pressure sensor may be defective. Check wiring harness for damage.	
	7	Defective pressure limiter	★ For testing of leakage from pressure limiter, see Testing and adjusting, Measuring fuel return rate and fuel leakage.	
			Leakage from pressure limiter (Operation equivalent to rated operation (under stall load))	Max. 10 cc/min
	8	Defective injector	★ For measuring of return (spill) limit from injector, see Testing and adjusting, Measuring fuel return rate and fuel leakage.	
			Speed in rated operation (stall load)	Return (Spill) limit from injector
			1,600 rpm	960 cc/min
			1,700 rpm	1,020 cc/min
			1,800 rpm	1,080 cc/min
			1,900 rpm	1,140 cc/min
			2,000 rpm	1,200 cc/min
	9	Defective supply pump	If causes 1 – 8 are not detected, supply pump may be defective.	

<How to use check sheet>
Carry out the above troubleshooting and take a record of the contents of the attached "Check sheet for rail pressure low error".

Note 1: Check the low-pressure circuit parts for the following items.
1) Fuel level
2) Clogging of fuel tank breather
3) Sticking and wear of feed pump and clogging of filter
4) Leakage through and clogging of low-pressure fuel piping
5) Defective operation of bypass valve and installation of wrong part (See Fig. 1)
6) Clogging of fuel filter
7) Fuel in oil pan (Fuel leakage inside head cover)

Fig. 1: Locations of overflow valve (1), bypass valve (2), and fuel inlet joint (3)
Overflow valve (1): Spring is seen through both holes.
Bypass valve (2): Spring is seen through hole on nut side.
Fuel inlet joint (3): Gauze filter is seen through both holes.

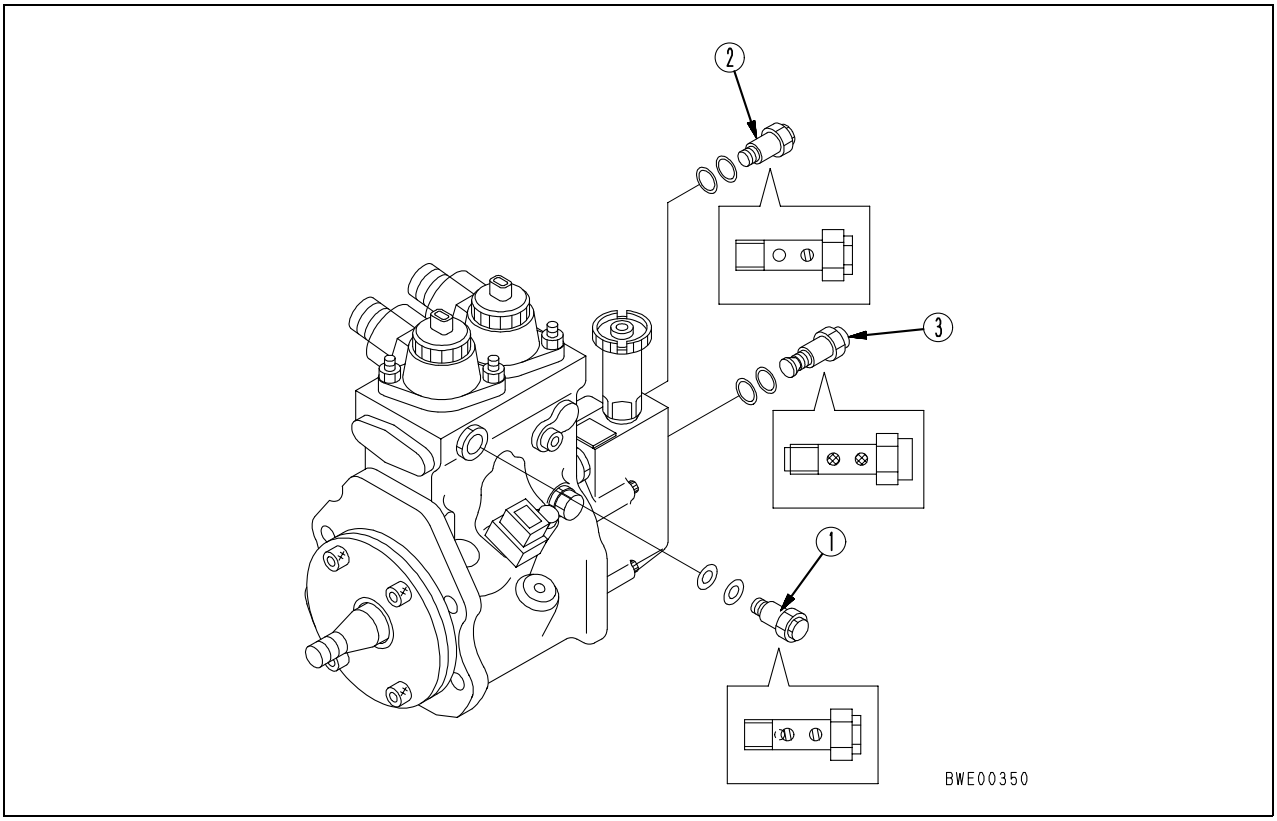

Note 2: Check, clean, and replace the filters and strainers according to the following procedure.
1) Gauze filter: Disassemble and check. If clogged, clean.
2) Upstream strainer of gauze filter: If the gauze filter is clogged, clean the upstream filter, too.
3) Fuel filter: If the trouble is not solved by performing 1) and 2) above, replace the fuel filter.

Check sheet for rail pressure low error

Model	D155AX-6	Work No.	
Machine serial No.	#	Date of check	/ /
Engine	SAA6D140E-5	Service meter	h
Engine serial No.	#	Worker's name	

A. Visual check		Good	NG
1	Fuel leakage to outside		
2	Clogging of fuel tank breather		

B. Check with machine monitor (02 Fault history, 01 monitoring, and 09 reduced cylinder mode operation)							Good	NG
3	Check of failure code	/ / / /						
4	Check of monitoring information							
	Code	Displayed item	Checking condition	ISO unit	Standard value (Reference value)	Measured value	Good	NG
	01002	Engine speed	Low idle	r/min	715 – 765			
			High idle	r/min	1,825 – 1,925			
			Torque converter stall	r/min	1,560 – 1,660			
	31706	Final accelerator position	Low idle	%	0			
			High idle	%	100			
	18600	Final fuel injection rate command (by weight)	Torque converter stall	mg/st	—		—	—
	36200	Final common rail pressure command	Torque converter stall	MPa	—		—	—
	36400	Common rail pressure	Torque converter stall	MPa	—		—	—
	36300	Final injection timing command	Low idle	CA	—		—	—
			High idle	CA	—		—	—
			Torque converter stall	CA	—		—	—
	36500	Boost pressure	Torque converter stall	kPa	—		—	—
	04107	Engine coolant temperature	Low idle	°C	—		—	—
	14200	Fuel temperature	Low idle	°C	—		—	—
5	Check of reduced cylinder mode operation (Engine speed)							
	Setting	Reduced cylinder	Checking condition	ISO unit	Standard value (Reference value)	Measured value	Good	NG
	Reduce each cylinder	No. 1 cylinder		r/min	—		—	—
		No. 2 cylinder		r/min	—		—	—
		No. 3 cylinder		r/min	—		—	—
		No. 4 cylinder		r/min	—		—	—
		No. 5 cylinder		r/min	—		—	—
		No. 6 cylinder		r/min	—		—	—

C. Check of fuel circuit pressure		Checking condition	Unit	Standard value (Reference value)	Measured value	Good	NG
6	Fuel low-pressure circuit pressure	High idle	MPa {kg/cm²}	Min. 0.15 {Min. 1.5}			

D. Check of strainers and filters		Good	NG
7	Visual check of strainers		
8	Visual check of gauze filter		
9	Visual check of fuel filter		
10	Visual check of bypass valve		

E. Check of leakage and return rate		Checking condition	Unit	Standard value (Reference value)	Measured value	Good	NG
11	Leakage through pressure limiter	Torque converter stal	cc/min	Max. 10			
12	Return rate from injector	Torque converter stall 1,600 rpm	cc/min	960	Speed: Leakage		
		Torque converter stall 1,700 rpm	cc/min	1,020			
		Torque converter stall 1,800 rpm	cc/min	1,080			
		Torque converter stall 1,900 rpm	cc/min	1,140			
		Torque converter stall 2,000 rpm	cc/min	1,200			

Failure code [CA689] Eng Ne Speed Sensor Error

Action code	Failure code	Trouble	Eng Ne Speed Sensor Error (Engine controller system)
E03	**CA689**		
Contents of trouble	• Trouble occurred in engine Ne speed sensor circuit.		
Action of controller	• Operates with signals of Bkup speed sensor.		
Problem that appears on machine	• Running engine stops (when Bkup speed sensor is also abnormal). • Stopped engine cannot be started (when Bkup speed sensor is also abnormal).		
Related information			

	Cause		Standard value in normal state/Remarks on troubleshooting		
Possible causes and standard value in normal state	1	Defective sensor power supply system	If code [**CA238**] is indicated, carry out troubleshooting for it first.		
	2	Disconnection in wiring harness (Disconnection in wiring or defective contact in connector)	★ Prepare with starting switch OFF, then carry out troubleshooting without turning starting switch ON.		
			Wiring harness between EGC1 (female) (16) – NE (female) (1)	Resistance	Max. 1 Ω
			Wiring harness between EGC1 (female) (48) – NE (female) (2)	Resistance	Max. 1 Ω
			Wiring harness between EGC1 (female) (27) – NE (female) (3)	Resistance	Max. 1 Ω
	3	Ground fault in wiring harness (Contact with GND circuit)	★ Prepare with starting switch OFF, then carry out troubleshooting without turning starting switch ON.		
			Wiring harness between EGC1 (female) (16) – NE (female) (1) and chassis ground	Resistance	Min. 1 MΩ
			Wiring harness between EGC1 (female) (48) – NE (female) (2) and chassis ground	Resistance	Min. 1 MΩ
			Wiring harness between EGC1 (female) (27) – NE (female) (3) and chassis ground	Resistance	Min. 1 MΩ
	4	Short circuit in wiring harness (with another wiring harness)	★ Prepare with starting switch OFF, then carry out troubleshooting without turning starting switch ON.		
			Wiring harness between EGC1 (female) (16) – NE (female) (1) and between EGC1 (female) (48) – NE (female) (2)	Resistance	Min. 1 MΩ
			Wiring harness between EGC1 (female) (16) – NE (female) (1) and between EGC1 (female) (48) – NE (female) (3)	Resistance	Min. 1 MΩ
			Chassis ground between EGC1 (female) (48) – NE (female) (2) and between EGC1 (female) (27) – NE (female) (3)	Resistance	Min. 1 MΩ
	5	Defective mount of sensor or defective rotation sensing part	Check Ne speed sensor directly for defective mount (defective clearance) or check rotation sensing part (flywheel) directly for defect.		
	6	Defective engine Ne speed sensor	If causes 1 – 5 are not detected, engine Ne speed sensor may be defective. (Since trouble is in system, troubleshooting cannot be carried out.)		
	7	Defective engine controller	If causes 1 – 5 are not detected, engine controller may be defective. (Since trouble is in system, troubleshooting cannot be carried out.)		

Circuit diagram related to engine Ne speed sensor

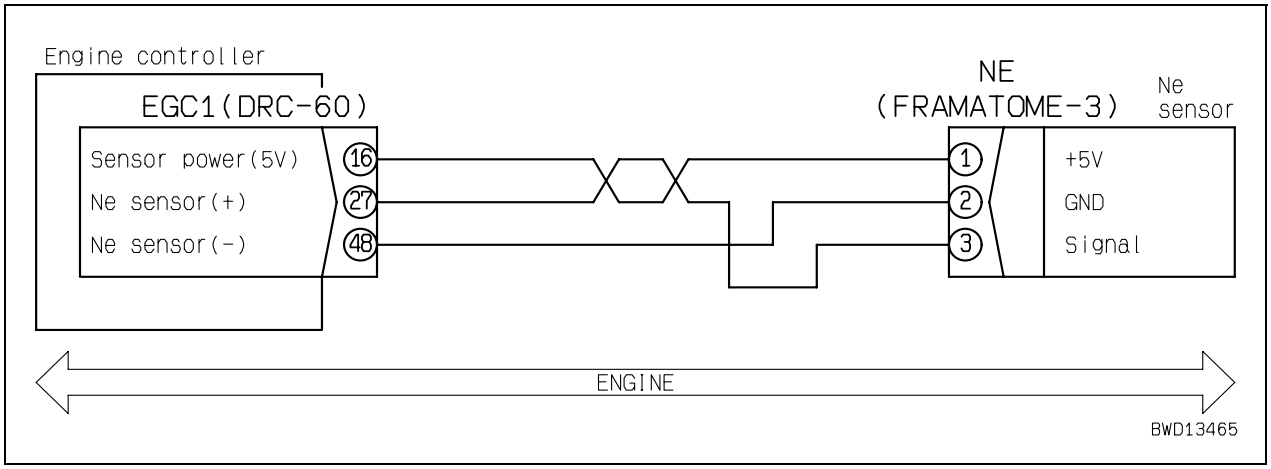

D155AX-6 Bulldozer

Form No. SEN00717-01

© 2006 KOMATSU
All Rights Reserved
Printed in Japan 05-06 (02)

BULLDOZER

D155AX-6

Machine model	Serial number
D155AX-6	80001 and up

40 Troubleshooting

Troubleshooting by failure and error codes, Part 3

Troubleshooting by failure and error codes, Part 3 3
Failure code [CA731] Eng Bkup Speed Sens Phase Error 3
Failure code [CA757] All Continuous Data Lost Error 3
Failure code [CA778] Eng Bkup Speed Sensor Error 4
Failure code [CA1228] EGR Valve Servo Error 1 6
Failure code [CA1625] EGR Valve Servo Error 2 7
Failure code [CA1626] BP Valve Sol Current High Error 8
Failure code [CA1627] BP Valve Sol Current Low Error 10
Failure code [CA1628] Bypass Valve Servo Error 1 11
Failure code [CA1619] Bypass Valve Servo Error 2 12
Failure code [CA1631] BP Valve Pos Sens High Error 14
Failure code [CA1632] BP Valve Pos Sens Low Error 16
Failure code [CA1633] KOMNET Datalink Timeout Error 18
Failure code [CA1642] EGR Inlet Press Sens Low Error 20

Failure code [CA1653] EGR Inlet Press Sens High Error 22
Failure code [CA2185] Throt Sens Sup Volt High Error 24
Failure code [CA2186] Throt Sens Sup Volt Low Error 26
Failure code [CA2249] Rail Press Very Low Error 26
Failure code [CA2271] EGR Valve Pos Sens High Error 28
Failure code [CA2272] EGR Valve Pos Sens Low Error 30
Failure code [CA2351] EGR Valve Sol Current High Error 32
Failure code [CA2352] EGR Valve Sol Current Low Error 34
Failure code [CA2555] Grid Htr Relay Volt Low Error 35
Failure code [CA2556] Grid Htr Relay Volt High Error 36
Failure code [D110KA] Battery relay: Disconnection 38
Failure code [D110KB] Battery Relay: Drive Short Circuit 40
Failure code [D130KA] Neutral relay: Disconnection 42
Failure code [D130KB] Neutral relay: Short circuit 44
Failure code [D161KA] Back-up alarm relay: Disconnection 46
Failure code [D161KB] Back-up alarm relay: Short circuit 48
Failure code [D190KA] ACC signal relay: Disconnection 50
Failure code [D190KB] ACC signal relay: Short circuit 52
Failure code [D5ZKKX] Throttle Dial: Out of normal range 54
Failure code [DAFRKR] CAN Disconnection (Monitor) 56
Failure code [DB2RKR] CAN Disconnection (Engine controller) 58
Failure code [DB90KK] WE controller: Source voltage reduction 60
Failure code [DB90KR] PT controller: Can communication lost 62

Troubleshooting by failure and error codes, Part 3

Failure code [CA731] Eng Bkup Speed Sens Phase Error

Action code	Failure code	Trouble	Eng Bkup Speed Sens Phase Error (Engine controller system)
E03	**CA731**		
Contents of trouble	• Engine Bkup sensor circuit detected phase error.		
Action of controller	• Controls with signals of engine Ne speed sensor.		
Problem that appears on machine	• Running engine stops (when Ne speed sensor is also abnormal). • Stopped engine cannot be started (when Ne speed sensor is also abnormal).		
Related information			

Possible causes and standard value in normal state	Cause		Standard value in normal state/Remarks on troubleshooting
	1	Defective engine Ne speed sensor system	Engine Ne speed sensor may be defective. Carry out trouble-shooting for failure code [**CA689**]**.**
	2	Defective engine Bkup speed sensor system	Engine Bkup speed sensor may be defective. Carry out trouble-shooting for failure code [**CA778**].

Failure code [CA757] All Continuous Data Lost Error

Action code	Failure code	Trouble	All Continuous Data Lost Error (Engine controller system)
E04	**CA757**		
Contents of trouble	• All data in engine controller are lost.		
Action of controller	• None in particular.		
Problem that appears on machine	• Engine continues operation normally, but it may stop during operation or may not be able to start.		
Related information			

Possible causes and standard value in normal state	Cause	Standard value in normal state/Remarks on troubleshooting
	Carry out troubleshooting for failure code [**CA111**].	

Failure code [CA778] Eng Bkup Speed Sensor Error

Action code	Failure code	Trouble	Eng Bkup Speed Sensor Error (Engine controller system)
E03	**CA778**		
Contents of trouble	• Trouble occurred in engine Bkup speed sensor circuit.		
Action of controller	• Operates with signals of Ne speed sensor.		
Problem that appears on machine	• Running engine stops (when Ne speed sensor is also abnormal). • Stopped engine cannot be started (when Ne speed sensor is also abnormal).		
Related information			

	Cause		Standard value in normal state/Remarks on troubleshooting		
Possible causes and standard value in normal state	1	Defective sensor power supply system	If code [**CA187**] or [**CA227**] is indicated, carry out troubleshooting for it first.		
	2	Disconnection in wiring harness (Disconnection in wiring or defective contact in connector)	★ Prepare with starting switch OFF, then carry out troubleshooting without turning starting switch ON.		
			Wiring harness between EGC1 (female) (37) – G (female) (1)	Resistance	Max. 1 Ω
			Wiring harness between EGC1 (female) (47) – G (female) (2)	Resistance	Max. 1 Ω
			Wiring harness between EGC1 (female) (26) – G (female) (3)	Resistance	Max. 1 Ω
	3	Ground fault in wiring harness (Contact with GND circuit)	★ Prepare with starting switch OFF, then carry out troubleshooting without turning starting switch ON.		
			Wiring harness between EGC1 (female) (37) – G (female) (1) and chassis ground	Resistance	Min. 1 MΩ
			Wiring harness between EGC1 (female) (47) – G (female) (2) and chassis ground	Resistance	Min. 1 MΩ
			Wiring harness between EGC1 (female) (26) – G (female) (3) and chassis ground	Resistance	Min. 1 MΩ
	4	Short circuit in wiring harness (with another wiring harness)	★ Prepare with starting switch OFF, then carry out troubleshooting without turning starting switch ON.		
			Wiring harness between EGC1 (female) (37) – G (female) (1) and between EGC1 (female) (47) – G (female) (2)	Resistance	Min. 1 MΩ
			Wiring harness between EGC1 (female) (37) – G (female) (1) and between EGC1 (female) (26) – G (female) (3)	Resistance	Min. 1 MΩ
			Chassis ground between EGC1 (female) (47) – G (female) (2) and between EGC1 (female) (29) – G (female) (3)	Resistance	Min. 1 MΩ
	5	Defective mount of sensor or defective rotation sensing part	Check Bkup speed sensor directly for defective mount (defective clearance) or check rotation sensing part (in supply pump) directly for defect.		
	6	Defective engine Bkup speed sensor	If causes 1 – 5 are not detected, engine Bkup speed sensor may be defective. (Since trouble is in system, troubleshooting cannot be carried out.)		
	7	Defective engine controller	If causes 1 – 5 are not detected, engine controller may be defective. (Since trouble is in system, troubleshooting cannot be carried out.)		

Circuit diagram related to engine Bkup speed sensor

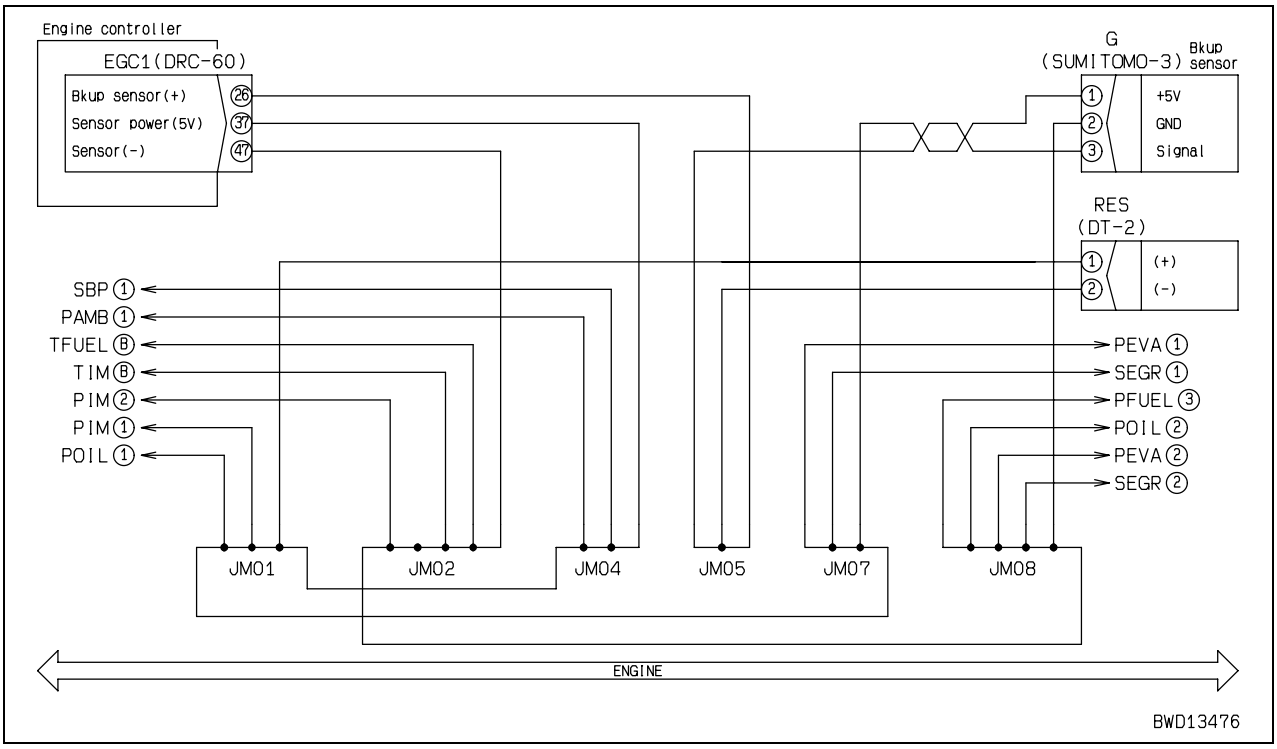

Failure code [CA1228] EGR Valve Servo Error 1

Action code	Failure code	Trouble	EGR Valve Servo Error 1 (Engine controller system)
E02	**CA1228**		
Contents of trouble	• Trouble (level 1) occurred in EGR valve servo.		
Action of controller	• Performs open control.		
Problem that appears on machine			
Related information	• Operating condition of EGR valve can be checked with monitoring function. (Code: 18100 EGR Valve Position)		

	Cause		Standard value in normal state/Remarks on troubleshooting	
Possible causes and standard value in normal state	1	Defective related system	If another failure code is indicated, carry out troubleshooting for it.	
	2	Defective engine oil pressure system (main circuit)	★ For check of engine oil pressure, see Testing and adjusting, Measuring engine oil pressure.	
			Engine	Engine oil pressure
			Low idle	0.08 MPa {0.8 kg/cm^2}
			High idle	0.21 MPa {2.1 kg/cm^2}
			If engine oil pressure is abnormal, carry out troubleshooting for "S-12 Oil pressure lowers" in S mode.	
	3	Defective oil pump for EGR valve	Check oil pump and relief valve for EGR valve circuit directly.	
	4	Defective oil feed piping for EGR valve	Check oil feed piping for EGR valve circuit directly.	
	5	Defective oil return piping for EGR valve	Check oil return piping for EGR valve circuit directly.	
	6	Defective EGR valve	Check mechanical section of EGR valve directly.	
	7	Defective engine controller	If causes 1 – 6 are not detected, engine controller may be defective. (Since trouble is in system, troubleshooting cannot be carried out.)	

Failure code [CA1625] EGR Valve Servo Error 2

Action code	Failure code	Trouble	EGR Valve Servo Error 2 (Engine controller system)
E03	**CA1625**		
Contents of trouble	• Trouble (level 2) occurred in EGR valve servo.		
Action of controller	• Limits engine output and continues operation. • Closes EGR valve and bypass valve.		
Problem that appears on machine	• Engine output drops.		
Related information	• Operating condition of EGR valve can be checked with monitoring function. (Code: 18100 EGR Valve Position)		

Possible causes and standard value in normal state	Cause	Standard value in normal state/Remarks on troubleshooting
	Carry out troubleshooting for failure code [**CA1228**].	

Failure code [CA1626] BP Valve Sol Current High Error

Action code	Failure code	Trouble	BP Valve Sol Current High Error (Engine controller system)
E03	**CA1626**		
Contents of trouble	• There is short circuit in drive circuit of bypass valve solenoid.		
Action of controller	• Limits engine output and continues operation. • Closes EGR valve and bypass valve.		
Problem that appears on machine	• Engine output drops.		
Related information			

	Cause		Standard value in normal state/Remarks on troubleshooting		
Possible causes and standard value in normal state	1	Defective bypass valve solenoid (Internal trouble)	★ Prepare with starting switch OFF, then carry out troubleshooting without turning starting switch ON.		
			BP (male)	Resistance	
			Between (1) – (2)	10 – 21 Ω	
	2	Disconnection in wiring harness (Disconnection in wiring or defective contact in connector)	★ Prepare with starting switch OFF, then carry out troubleshooting without turning starting switch ON.		
			Wiring harness between EGC1 (female) (31) – BP (female) (1)	Resistance	Max. 1 Ω
			Wiring harness between EGC1 (female) (11) – BP (female) (2)	Resistance	Max. 1 Ω
	3	Ground fault in wiring harness (Contact with GND circuit)	★ Prepare with starting switch OFF, then carry out troubleshooting without turning starting switch ON.		
			Wiring harness between EGC1 (female) (31) – BP (female) (1) and chassis ground	Resistance	Min. 1 MΩ
			Wiring harness between EGC1 (female) (11) – BP (female) (2) and chassis ground	Resistance	Min. 1 MΩ
	4	Hot short (Short circuit with 24V circuit) in wiring harness	★ Prepare with starting switch OFF, then turn starting switch ON and carry out troubleshooting.		
			Wiring harness between EGC1 (female) (31) - BP (female) (1) and chassis ground	Voltage	Max. 1 V
			Wiring harness between EGC1 (female) (11) – BP (female) (2) and chassis ground	Voltage	Max. 1 V
	5	Defective engine controller	Prepare with starting switch OFF, then carry out troubleshooting without turning starting switch ON.		
			EGC1 (female)	Resistance	
			Between (31) – (11)	10 – 21 Ω	

Circuit diagram related to bypass valve solenoid & lift sensor

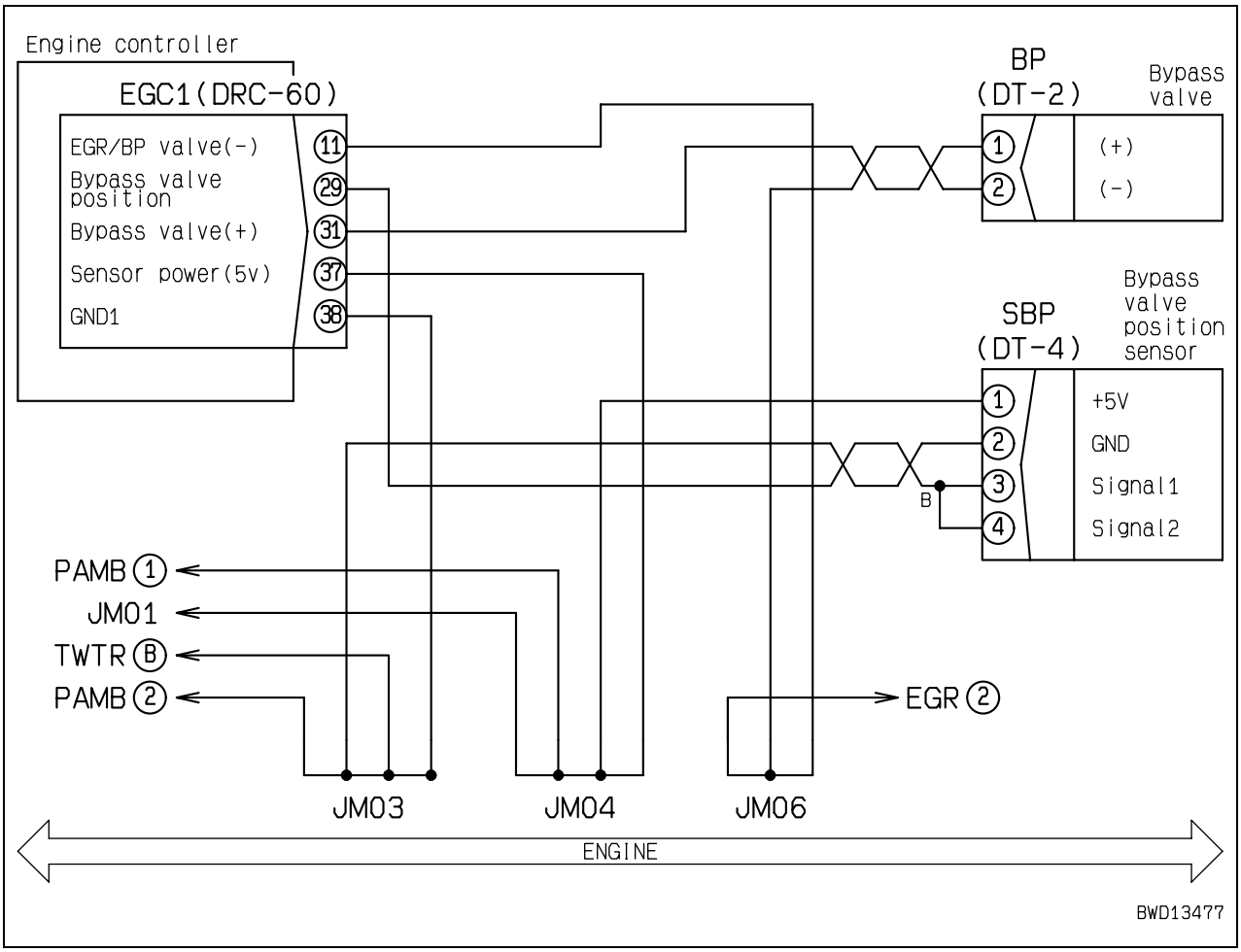

Failure code [CA1627] BP Valve Sol Current Low Error

Action code	Failure code	Trouble	BP Valve Sol Current Low Error (Engine controller system)
E03	**CA1627**		
Contents of trouble	• There is disconnection in drive circuit of bypass valve solenoid.		
Action of controller	• Limits engine output and continues operation. • Closes EGR valve and bypass valve.		
Problem that appears on machine	• Engine output drops.		
Related information			

Possible causes and standard value in normal state	Cause	Standard value in normal state/Remarks on troubleshooting
	Carry out troubleshooting for failure code [**CA1626**].	

Failure code [CA1628] Bypass Valve Servo Error 1

Action code	Failure code	Trouble	Bypass Valve Servo Error 1 (Engine controller system)
E02	**CA1628**		
Contents of trouble	• Trouble (level 1) occurred in bypass valve servo.		
Action of controller	• Performs open control.		
Problem that appears on machine			
Related information	• Operating condition of bypass valve can be checked with monitoring function. (Code: 18200 BPS Valve Position)		

	Cause		Standard value in normal state/Remarks on troubleshooting	
Possible causes and standard value in normal state	1	Defective related system	If another failure code is indicated, carry out troubleshooting for it.	
	2	Defective engine oil pressure system (main circuit)	★ For check of engine oil pressure, see Testing and adjusting, Measuring engine oil pressure.	
			Engine	Engine oil pressure
			Low idle	0.08 MPa {0.8 kg/cm^2}
			High idle	0.21 MPa {2.1 kg/cm^2}
			If engine oil pressure is abnormal, carry out troubleshooting for "S–12 Oil pressure lowers" in S mode.	
	3	Defective oil pump for bypass valve	Check oil pump and relief valve for bypass valve circuit directly.	
	4	Defective oil feed piping for bypass valve	Check oil feed piping for bypass valve circuit directly.	
	5	Defective oil return piping for bypass valve	Check oil return piping for bypass valve circuit directly.	
	6	Defective bypass valve	Check mechanical section of bypass valve directly.	
	7	Defective engine controller	If causes 1 – 6 are not detected, engine controller may be defective. (Since trouble is in system, troubleshooting cannot be carried out.)	

Failure code [CA1619] Bypass Valve Servo Error 2

Action code	Failure code	Trouble	Bypass Valve Servo Error 2 (Engine controller system)
E03	**CA1619**		
Contents of trouble	• Trouble (level 2) occurred in bypass valve servo.		
Action of controller	• Limits engine output and continues operation. • Closes EGR valve and bypass valve.		
Problem that appears on machine	• Engine output drops.		
Related information	• Operating condition of bypass valve can be checked with monitoring function. (Code: 18200 BPS Valve Position)		

Possible causes and standard value in normal state	Cause	Standard value in normal state/Remarks on troubleshooting
	Carry out troubleshooting for failure code [**CA1628**].	

Failure code [CA1631] BP Valve Pos Sens High Error

Action code	Failure code	Trouble	BP Valve Pos Sens High Error (Engine controller system)
E03	**CA1631**		
Contents of trouble	• Signal voltage in bypass valve lift sensor circuit is abnormally high.		
Action of controller	• Limits engine output and continues operation. • Closes EGR valve and bypass valve.		
Problem that appears on machine	• Engine output drops.		
Related information	• State of bypass valve lift sensor signal can be checked with monitoring function. (Code: 18201 BPS Valve Pos Sens Volt)		

	Cause		Standard value in normal state/Remarks on troubleshooting		
Possible causes and standard value in normal state	1	Defective sensor power supply system	If code [**CA187**] or [**CA227**] is indicated, carry out troubleshooting for it first.		
	2	Defective bypass valve lift sensor (Internal trouble)	★ Prepare with starting switch OFF, then turn starting switch ON or start engine and carry out troubleshooting.		
			SBP		Voltage
			Between (1) – (2)	Power supply	4.75 – 5.25 V
			Sensor voltage is measured with wiring harness connected. Accordingly, if voltage is abnormal, check wiring harness and controller, too, for another cause of trouble, and then judge.		
	3	Disconnection in wiring harness (Disconnection in wiring or defective contact in connector)	★ Prepare with starting switch OFF, then carry out troubleshooting without turning starting switch ON.		
			Wiring harness between EGC1 (female) (37) – SBP (female) (1)	Resistance	Max. 1 Ω
			Wiring harness between EGC1 (female) (38) – SBP (female) (2)	Resistance	Max. 1 Ω
			Wiring harness between EGC1 (female) (29) – SBP (female) (3), (4)	Resistance	Max. 1 Ω
	4	Ground fault in wiring harness (Contact with GND circuit)	★ Prepare with starting switch OFF, then carry out troubleshooting without turning starting switch ON.		
			Wiring harness between EGC1 (female) (37) – SBP (female) (1) and chassis ground	Resistance	Min. 1 MΩ
			Wiring harness between EGC1 (female) (38) – SBP (female) (2) and chassis ground	Resistance	Min. 1 MΩ
			Wiring harness between EGC1 (female) (29) – SBP (female) (3), (4) and chassis ground	Resistance	Min. 1 MΩ
	5	Short circuit in wiring harness (with another wiring harness)	★ Prepare with starting switch OFF, then carry out troubleshooting without turning starting switch ON.		
			Wiring harness between EGC1 (female) (37) – SBP (female) (1) and between EGC1 (female) (38) – SBP (female) (2)	Resistance	Min. 1 MΩ
			Wiring harness between EGC1 (female) (37) – SBP (female) (1) and between EGC1 (female) (29) – SBP (female) (3), (4)	Resistance	Min. 1 MΩ
			Wiring harness between EGC1 (female) (38) – SBP (female) (2) and between EGC1 (female) (29) – SBP (female) (3), (4)	Resistance	Min. 1 MΩ

Possible causes and standard value in normal state	Cause		Standard value in normal state/Remarks on troubleshooting	
	6	Defective engine controller	Prepare with starting switch OFF, then turn starting switch ON or start engine and carry out troubleshooting.	
			EGC1	Voltage
			Between (37) – (38)	4.75 – 5.25 V

Circuit diagram related to bypass valve solenoid & lift sensor

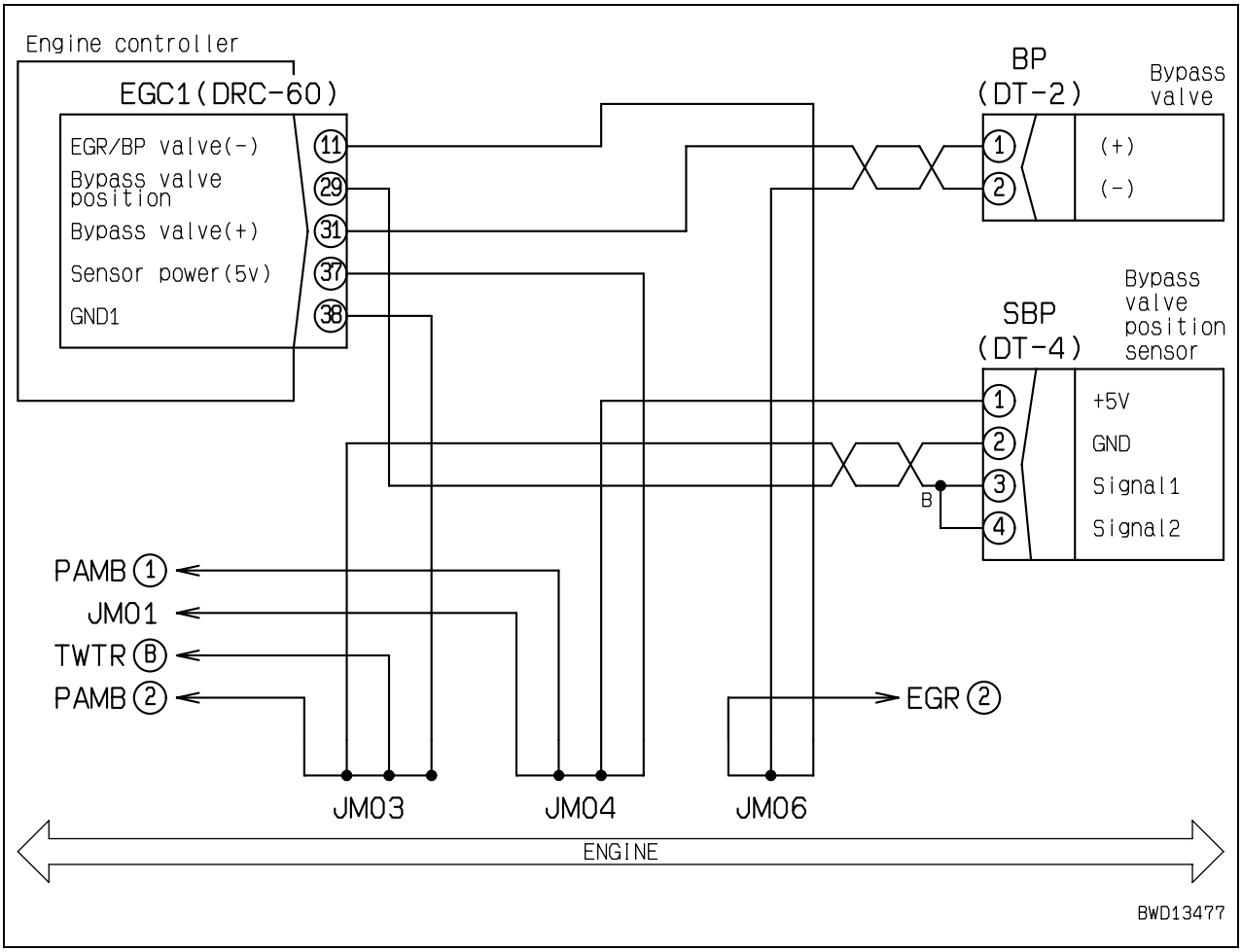

Failure code [CA1632] BP Valve Pos Sens Low Error

Action code	Failure code	Trouble	BP Valve Pos Sens Low Error (Engine controller system)
E03	**CA1632**		
Contents of trouble	• Signal voltage in bypass valve lift sensor circuit is abnormally low.		
Action of controller	• Limits engine output and continues operation. • Closes EGR valve and bypass valve.		
Problem that appears on machine	• Engine output drops.		
Related information	• State of bypass valve lift sensor signal can be checked with monitoring function. (Code: 18201 BPS Valve Pos Sens Volt)		

Possible causes and standard value in normal state	Cause	Standard value in normal state/Remarks on troubleshooting
	Carry out troubleshooting for failure code [**CA1631**].	

Failure code [CA1633] KOMNET Datalink Timeout Error

Action code	Failure code	Trouble	KOMNET Datalink Timeout Error (Engine controller system)
E03	**CA1633**		
Contents of trouble	• Trouble occurred in KOMNET (CAN) communication circuit between engine controller and machine monitor, power train controller, and work equipment controller.		
Action of controller	• Operates in default mode or maintains condition when abnormality occurs.		
Problem that appears on machine			
Related information			

	Cause		Standard value in normal state/Remarks on troubleshooting		
Possible causes and standard value in normal state	1	Disconnection in wiring harness (Disconnection in wiring or defective contact in connector)	★ Prepare with starting switch OFF, then carry out troubleshooting without turning starting switch ON.		
			Wiring harness between CM02 (female) (8), (9) – EGC2 (female) (46), STC2 (female) (32) or WEC2 (female) (32)	Resistance	Max. 1 Ω
			Wiring harness between CM02 (female) (10) – EGC2 (female) (47), STC2 (female) (22) or WEC2 (female) (22)	Resistance	Max. 1 Ω
	2	Ground fault in wiring harness (Contact with GND circuit)	★ Prepare with starting switch OFF, then carry out troubleshooting without turning starting switch ON.		
			Wiring harness between CM02 (female) (8), (9) – EGC2 (female) (46), STC2 (female) (32), WEC2 (female) (32), ACCN (female) (17), SRV (male) (3) or CA1 (female) (A) and chassis ground	Resistance	Min. 1 MΩ
			Wiring harness between CM02 (female) (10) – EGC2 (female) (47), STC2 (female) (22), WEC2 (female) (22), ACCN (female) (18), SRV (male) (10) or CA1 (female) (B) and chassis ground	Resistance	Min. 1 MΩ
	3	Hot short (Contact with GND circuit) in wiring harness	★ Prepare with starting switch OFF, then turn starting switch ON and carry out troubleshooting.		
			Wiring harness between CM02 (female) (8), (9) – EGC2 (female) (46), STC2 (female) (32), WEC2 (female) (32), ACCN (female) (17), SRV (male) (3) or CA1 (female) (A) and chassis ground	Voltage	Max. 1 V
			Wiring harness between CM02 (female) (10) – EGC2 (female) (47), STC2 (female) (22), WEC2 (female) (22), ACCN (female) (18), SRV (male) (10) or CA1 (female) (B) and chassis ground	Voltage	Max. 1 V
	4	Defective CAN terminal resistance (Internal disconnection or short circuit)	Prepare with starting switch OFF, then carry out troubleshooting without turning starting switch ON.		
			CA1 (male)	Resistance	
			Between (A) – (B)	Approx. 120 Ω	
	5	Defective engine controller	If causes 1 – 4 are not detected, engine controller may be defective. (Since trouble is in system, troubleshooting cannot be carried out.)		

Circuit diagram related to CAN communication

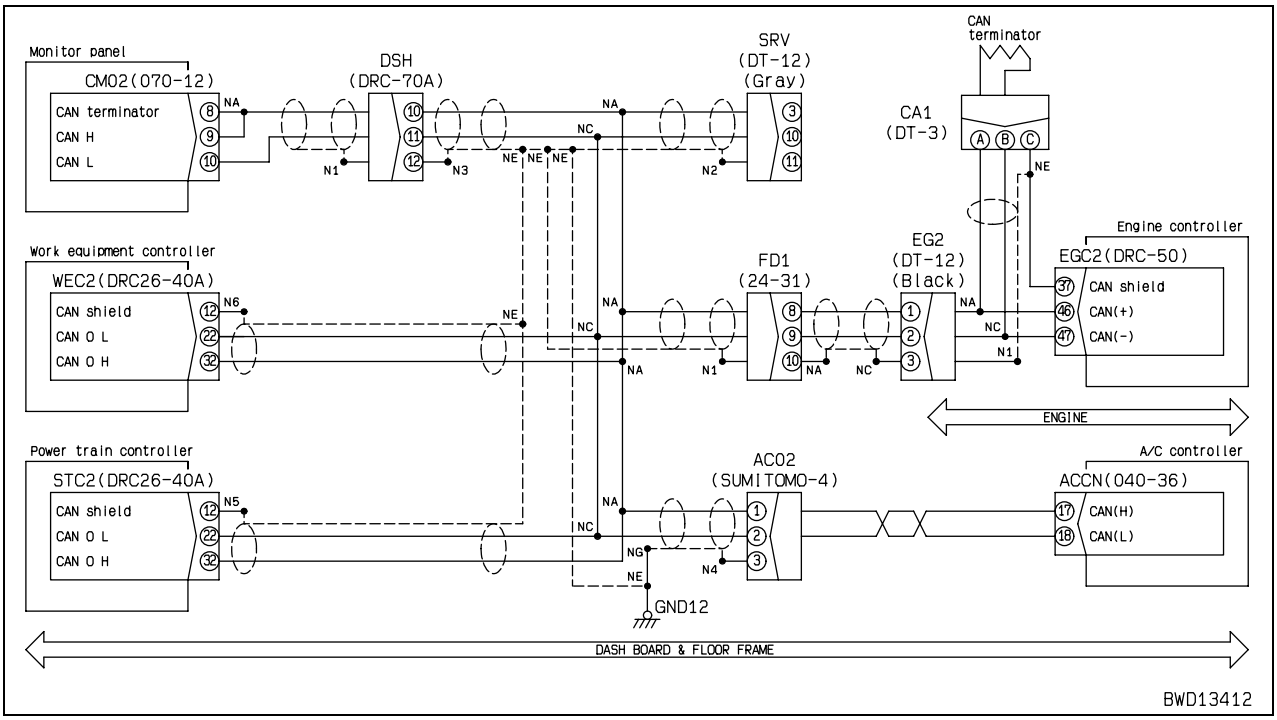

Failure code [CA1642] EGR Inlet Press Sens Low Error

Action code	Failure code	Trouble	EGR Inlet Press Sens Low Error (Engine controller system)
E01	**CA1642**		
Contents of trouble	• Signal voltage in EGR inlet pressure sensor circuit is abnormally low.		
Action of controller	• Sets EGR inlet pressure to default value (102 kPa {1.04 kg/cm^2}) and continues operation. • Limits engine output and continues operation.		
Problem that appears on machine	• Engine output drops.		
Related information	• State of EGR valve inlet pressure sensor signal can be checked with monitoring function. (Code: 18001 EGR In Press Sens Volt)		

Possible causes and standard value in normal state	Cause	Standard value in normal state/Remarks on troubleshooting
	Carry out troubleshooting for failure code [**CA1653**].	

Failure code [CA1653] EGR Inlet Press Sens High Error

Action code	Failure code	Trouble	EGR Inlet Press Sens High Error (Engine controller system)
E01	**CA1653**		
Contents of trouble	• Signal voltage in EGR inlet pressure sensor circuit is abnormally high.		
Action of controller	• Sets EGR inlet pressure to default value (102 kPa {1.04 kg/cm²}) and continues operation. • Limits engine output and continues operation.		
Problem that appears on machine	• Engine output drops.		
Related information	• State of EGR valve inlet pressure sensor signal can be checked with monitoring function. (Code: 18001 EGR In Press Sens Volt)		

	Cause		Standard value in normal state/Remarks on troubleshooting			
Possible causes and standard value in normal state	1	Defective sensor power supply system	If code [**CA187**] or [**CA227**] is indicated, carry out troubleshooting for it first.			
	2	Defective EGR inlet pressure sensor (Internal trouble)	★ Prepare with starting switch OFF, then turn starting switch ON or start engine and carry out troubleshooting.			
			PEVA		Voltage	
			Between (1) – (2)	Power supply	4.75 – 5.25 V	
			Sensor voltage is measured with wiring harness connected. Accordingly, if voltage is abnormal, check wiring harness and controller, too, for another cause of trouble, and then judge.			
	3	Disconnection in wiring harness (Disconnection in wiring or defective contact in connector)	★ Prepare with starting switch OFF, then carry out troubleshooting without turning starting switch ON.			
			Wiring harness between EGC1 (female) (37) – PEVA (female) (1)		Resistance	Max. 1 Ω
			Wiring harness between EGC1 (female) (47) – PEVA (female) (2)		Resistance	Max. 1 Ω
			Wiring harness between EGC1 (female) (20) – PEVA (female) (3)		Resistance	Max. 1 Ω
	4	Ground fault in wiring harness (Contact with GND circuit)	★ Prepare with starting switch OFF, then carry out troubleshooting without turning starting switch ON.			
			Wiring harness between EGC1 (female) (37) – PEVA (female) (1) and chassis ground		Resistance	Min. 1 MΩ
			Wiring harness between EGC1 (female) (47) – PEVA (female) (2) and chassis ground		Resistance	Min. 1 MΩ
			Wiring harness between EGC1 (female) (20) – PEVA (female) (3) and chassis ground		Resistance	Min. 1 MΩ
	5	Short circuit in wiring harness (with another wiring harness)	★ Prepare with starting switch OFF, then carry out troubleshooting without turning starting switch ON.			
			Wiring harness between EGC1 (female) (37) – PEVA (female) (1) and between EGC1 (female) (47) – PEVA (female) (2)		Resistance	Min. 1 MΩ
			Wiring harness between EGC1 (female) (37) – PEVA (female) (1) and between EGC1 (female) (20) – PEVA (female) (3)		Resistance	Min. 1 MΩ
			Wiring harness between EGC1 (female) (47) – PEVA (female) (2) and between EGC1 (female) (20) – PEVA (female) (3)		Resistance	Min. 1 MΩ
	6	Defective engine controller	★ Prepare with starting switch OFF, then turn starting switch ON or start engine and carry out troubleshooting.			
			EGC1		Voltage	
			Between (37) – (47)		4.75 – 5.25 V	

Circuit diagram related to EGR inlet pressure sensor

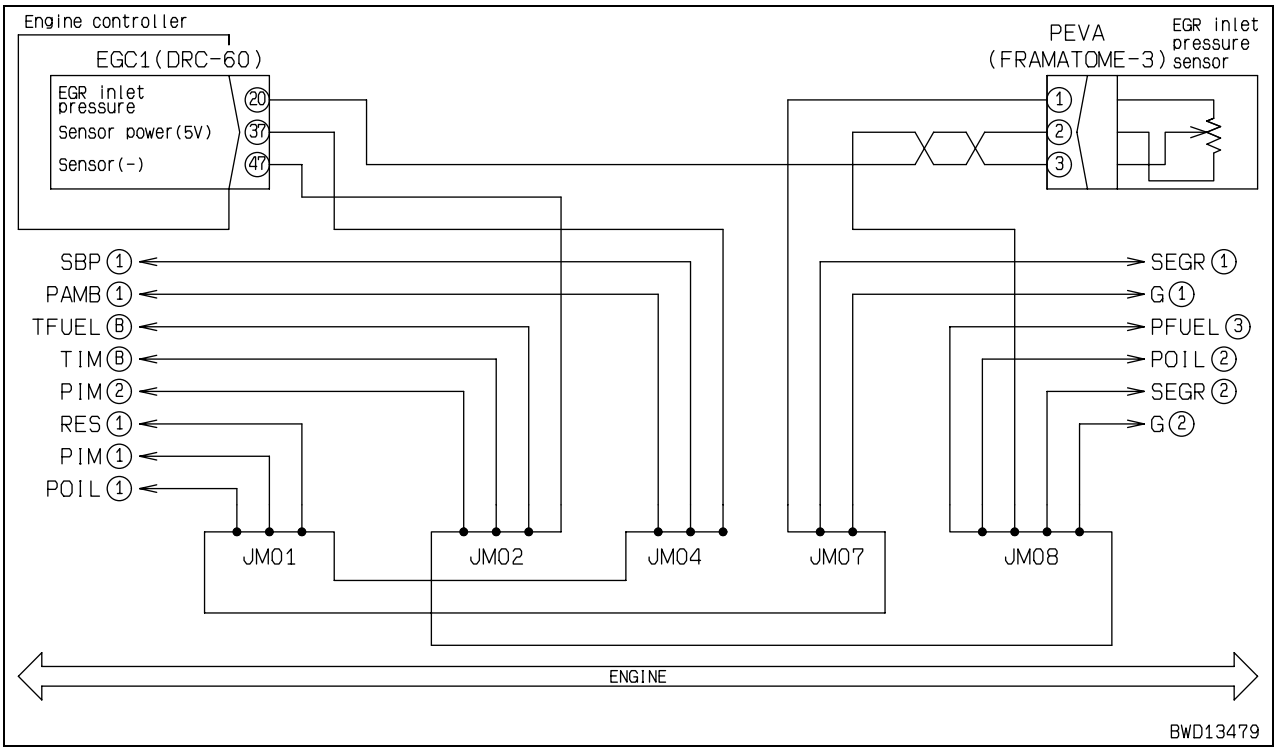

Failure code [CA2185] Throt Sens Sup Volt High Error

Action code	Failure code	Trouble	Throt Sens Sup Volt High Error (Engine controller system)
E03	**CA2185**		
Contents of trouble	• Signal voltage in throttle sensor power supply (5 V) circuit is abnormally high.		
Action of controller	• Sets throttle position with signal of fuel control dial and continues operation.		
Problem that appears on machine			
Related information			

	Cause		Standard value in normal state/Remarks on troubleshooting			
Possible causes and standard value in normal state	1	Defective fuel control dial (Internal trouble)	★ Prepare with starting switch OFF, then turn starting switch ON and carry out troubleshooting.			
			Disconnect devices at right in order. If "E" of failure code disappears when a device is disconnected, that device has trouble in it.	Decelerator pedal potentiometer	DCL connector	
	2	Disconnection in wiring harness (Disconnection in wiring or defective contact in connector)	★ Prepare with starting switch OFF, then carry out troubleshooting without turning starting switch ON.			
			Wiring harness between EGC2 (female) (22) – DCL (female) (B)		Resistance	Max. 1 Ω
			Wiring harness between EGC2 (female) (23) – DCL (female) (C)		Resistance	Max. 1 Ω
	3	Ground fault in wiring harness (Contact with GND circuit)	★ Prepare with starting switch OFF, then carry out troubleshooting without turning starting switch ON.			
			Wiring harness between EGC2 (female) (22) – DCL (female) (B) and chassis ground		Resistance	Min. 1 MΩ
			Wiring harness between EGC2 (female) (23) – DCL (female) (C) and chassis ground		Resistance	Min. 1 MΩ
	4	Short circuit in wiring harness (with another wiring harness)	★ Prepare with starting switch OFF, then carry out troubleshooting without turning starting switch ON.			
			Wiring harness between EGC2 (female) (22) – DCL (female) (B) and between EGC2 (female) (23) – DCL (female) (C)		Resistance	Min. 1 MΩ
	5	Defective engine controller	★ Prepare with starting switch OFF, then turn starting switch ON and carry out troubleshooting.			
			EGC2	Voltage		
			Between (22) – (23)	4.75 – 5.25 V		

Circuit diagram related to throttle sensor power supply of engine controller

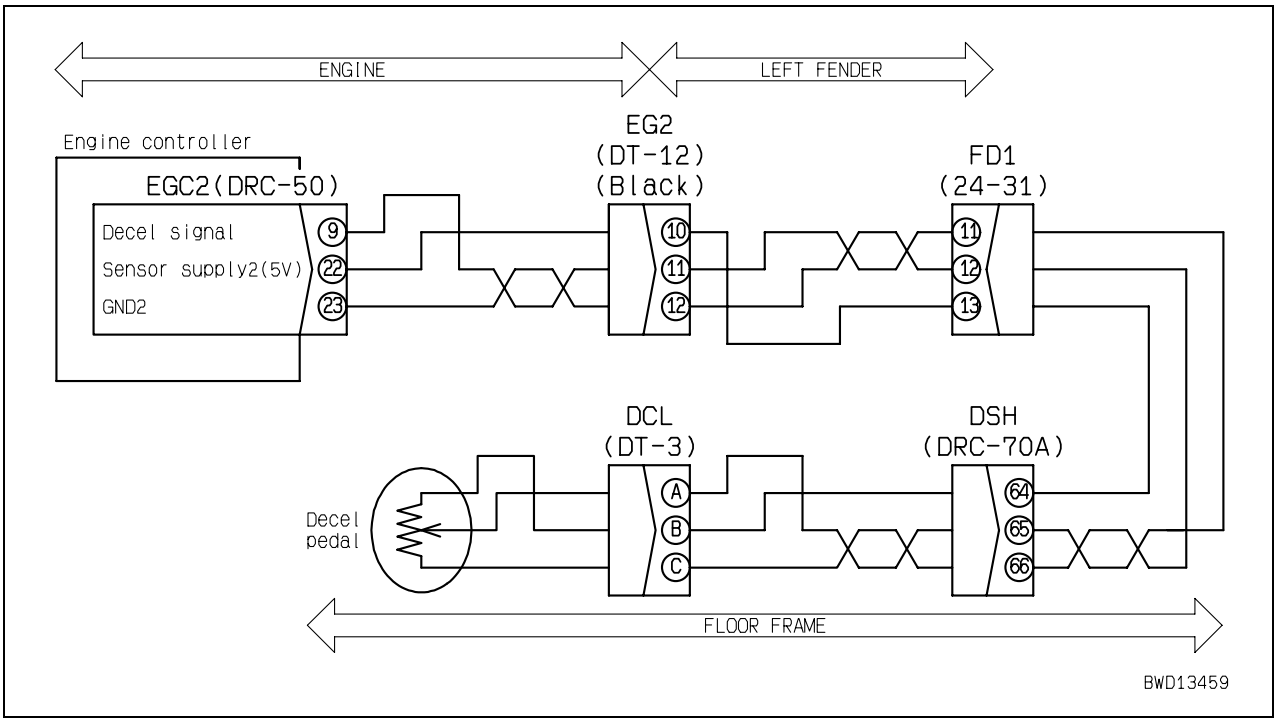

Failure code [CA2186] Throt Sens Sup Volt Low Error

Action code	Failure code	Trouble	Throt Sens Sup Volt Low Error (Engine controller system)
E03	**CA2186**		
Contents of trouble	• Signal voltage in throttle sensor power supply (5 V) circuit of engine controller is abnormally low.		
Action of controller	• Sets throttle position with signal of fuel control dial and continues operation.		
Problem that appears on machine			
Related information			

Possible causes and standard value in normal state	Cause	Standard value in normal state/Remarks on troubleshooting
	Carry out troubleshooting for failure code [**CA2185**].	

Failure code [CA2249] Rail Press Very Low Error

Action code	Failure code	Trouble	Rail Press Very Low Error (Engine controller system)
E03	**CA2249**		
Contents of trouble	• Very low pressure error (level 2) occurred in supply pump.		
Action of controller	• Limits common rail pressure.		
Problem that appears on machine	• Engine output drops.		
Related information			

Possible causes and standard value in normal state	Cause	Standard value in normal state/Remarks on troubleshooting
	Carry out troubleshooting for failure code [**CA559**].	

Failure code [CA2271] EGR Valve Pos Sens High Error

Action code	Failure code	Trouble	EGR Valve Pos Sens High Error (Engine controller system)
E03	**CA2271**		
Contents of trouble	• Signal voltage in EGR valve lift sensor circuit is abnormally high.		
Action of controller	• Limits engine output and continues operation. • Closes EGR valve and bypass valve.		
Problem that appears on machine	• Engine output drops.		
Related information	• State of EGR valve lift sensor signal can be checked with monitoring function. (Code: 18101 EGR Valve Pos Sens Volt)		

	Cause		Standard value in normal state/Remarks on troubleshooting			
Possible causes and standard value in normal state	1	Defective sensor power supply	If code [**CA187**] or [**CA227**] is indicated, carry out troubleshooting for it first.			
	2	Defective EGR valve lift sensor (Internal trouble)	★ Prepare with starting switch OFF, then turn starting switch ON or start engine and carry out troubleshooting.			
			SEGR		Voltage	
			Between (1) – (2)	Power supply	4.75 – 5.25 V	
			Sensor voltage is measured with wiring harness connected. Accordingly, if voltage is abnormal, check wiring harness and controller, too, for another cause of trouble, and then judge.			
	3	Disconnection in wiring harness (Disconnection in wiring or defective contact in connector)	★ Prepare with starting switch OFF, then carry out troubleshooting without turning starting switch ON.			
			Wiring harness between EGC1 (female) (37) – SEGR (female) (1)		Resistance	Max. 1 Ω
			Wiring harness between EGC1 (female) (47) – SEGR (female) (2)		Resistance	Max. 1 Ω
			Wiring harness between EGC1 (female) (19) – SEGR (female) (3), (4)		Resistance	Max. 1 Ω
	4	Ground fault in wiring harness (Contact with GND circuit)	★ Prepare with starting switch OFF, then carry out troubleshooting without turning starting switch ON.			
			Wiring harness between EGC1 (female) (37) – SEGR (female) (1) and chassis ground		Resistance	Min. 1 MΩ
			Wiring harness between EGC1 (female) (47) – SEGR (female) (2) and chassis ground		Resistance	Min. 1 MΩ
			Wiring harness between EGC1 (female) (19) – SEGR (female) (3), (4) and chassis ground		Resistance	Min. 1 MΩ
	5	Short circuit in wiring harness (with another wiring harness)	★ Prepare with starting switch OFF, then carry out troubleshooting without turning starting switch ON.			
			Wiring harness between EGC1 (female) (37) – SEGR (female) (1) and between EGC1 (female) (47) – SEGR (female) (2)		Resistance	Min. 1 MΩ
			Wiring harness between EGC1 (female) (37) – SEGR (female) (1) and between EGC1 (female) (19) – SEGR (female) (3), (4)		Resistance	Min. 1 MΩ
			Wiring harness between EGC1 (female) (47) – SEGR (female) (2) and between EGC1 (female) (19) – SEGR (female) (3), (4)		Resistance	Min. 1 MΩ

Possible causes and standard value in normal state	Cause		Standard value in normal state/Remarks on troubleshooting	
	6	Defective engine controller	★ Prepare with starting switch OFF, then turn starting switch ON or start engine and carry out troubleshooting.	
			EGC1	Voltage
			Between (37) – (47)	4.75 – 5.25 V

Circuit diagram related to EGR valve solenoid & lift sensor

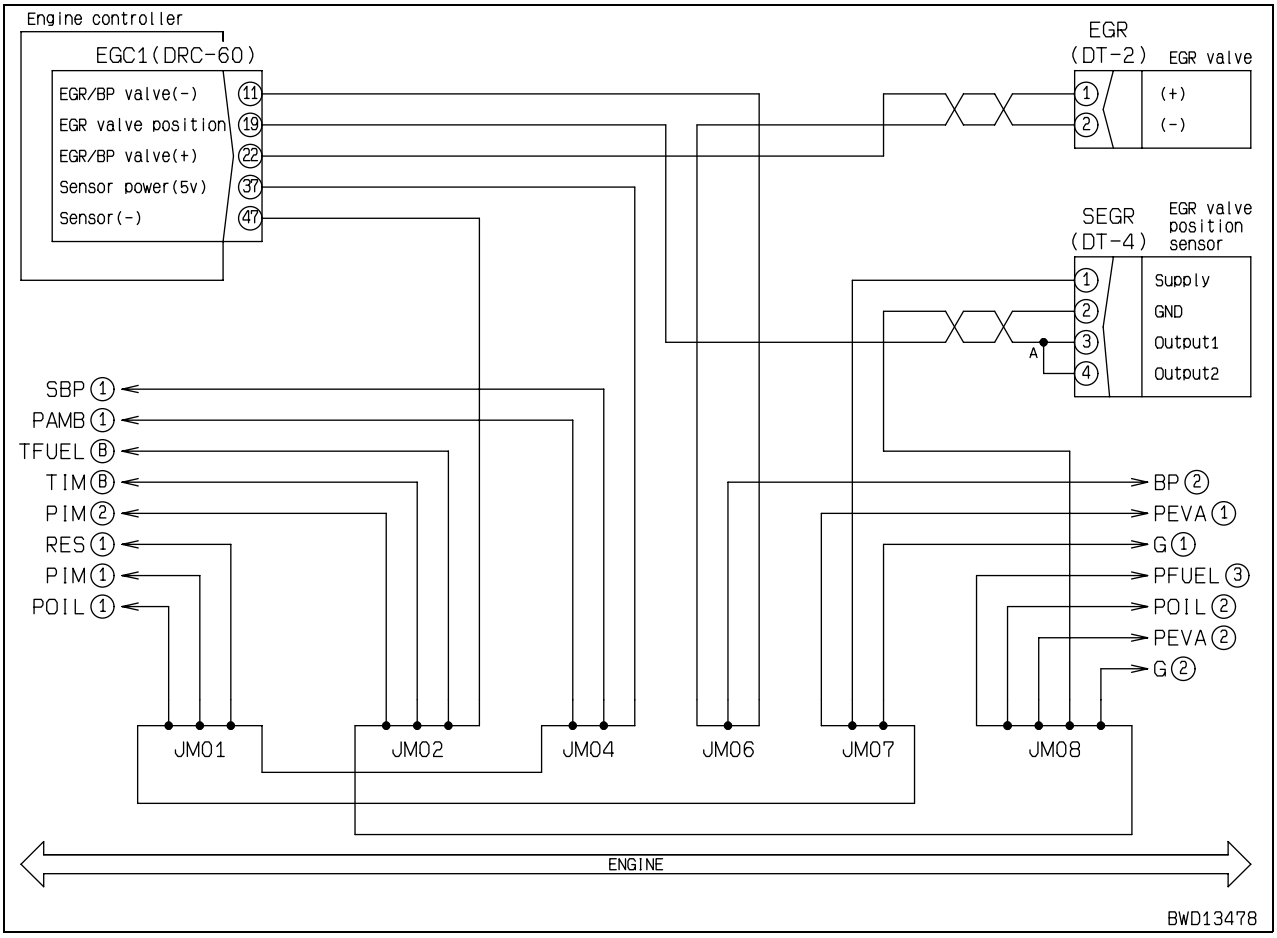

Failure code [CA2272] EGR Valve Pos Sens Low Error

Action code	Failure code	Trouble	EGR Valve Pos Sens Low Error (Engine controller system)
E03	**CA2272**		
Contents of trouble	• Signal voltage in EGR valve lift sensor circuit is abnormally low.		
Action of controller	• Limits engine output and continues operation. • Closes EGR valve and bypass valve.		
Problem that appears on machine	• Engine output drops.		
Related information	• State of EGR valve lift sensor signal can be checked with monitoring function. (Code: 18101 EGR Valve Pos Sens Volt)		

Possible causes and standard value in normal state	Cause	Standard value in normal state/Remarks on troubleshooting
	Carry out troubleshooting for failure code [**CA2271**].	

Failure code [CA2351] EGR Valve Sol Current High Error

Action code	Failure code	Trouble	EGR Valve Sol Current High Error (Engine controller system)
E03	**CA2351**		
Contents of trouble	• There is short circuit in EGR valve solenoid drive circuit.		
Action of controller	• Limits engine output and continues operation. • Closes EGR valve and bypass valve.		
Problem that appears on machine	• Engine output drops.		
Related information			

	Cause		Standard value in normal state/Remarks on troubleshooting		
Possible causes and standard value in normal state	1	Defective EGR valve solenoid (Internal trouble)	★ Prepare with starting switch OFF, then carry out troubleshooting without turning starting switch ON.		
			EGR (male)	Resistance	
			Between (1) – (2)	10 – 21 Ω	
	2	Disconnection in wiring harness (Disconnection in wiring or defective contact in connector)	★ Prepare with starting switch OFF, then carry out troubleshooting without turning starting switch ON.		
			Wiring harness between EGC1 (female) (22) – EGR (female) (1)	Resistance	Max. 1 Ω
			Wiring harness between EGC1 (female) (11) – EGR (female) (2)	Resistance	Max. 1 Ω
	3	Ground fault in wiring harness (Contact with GND circuit)	★ Prepare with starting switch OFF, then carry out troubleshooting without turning starting switch ON.		
			Wiring harness between EGC1 (female) (22) – EGR (female) (1) and chassis ground	Resistance	Min. 1 MΩ
			Wiring harness between EGC1 (female) (11) – EGR (female) (2) and chassis ground	Resistance	Min. 1 MΩ
	4	Hot short (Short circuit with 24V circuit) in wiring harness	★ Prepare with starting switch OFF, then turn starting switch ON and carry out troubleshooting.		
			Wiring harness between EGC1 (female) (22) – EGR (female) (1) and chassis ground	Voltage	Max. 1 V
			Wiring harness between EGC1 (female) (11) – EGR (female) (2) and chassis ground	Voltage	Max. 1 V
	5	Defective engine controller	★ Prepare with starting switch OFF, then carry out troubleshooting without turning starting switch ON.		
			EGC1 (female)	Resistance	
			Between (22) – (11)	10 – 21 Ω	

Circuit diagram related to EGR valve solenoid & lift sensor

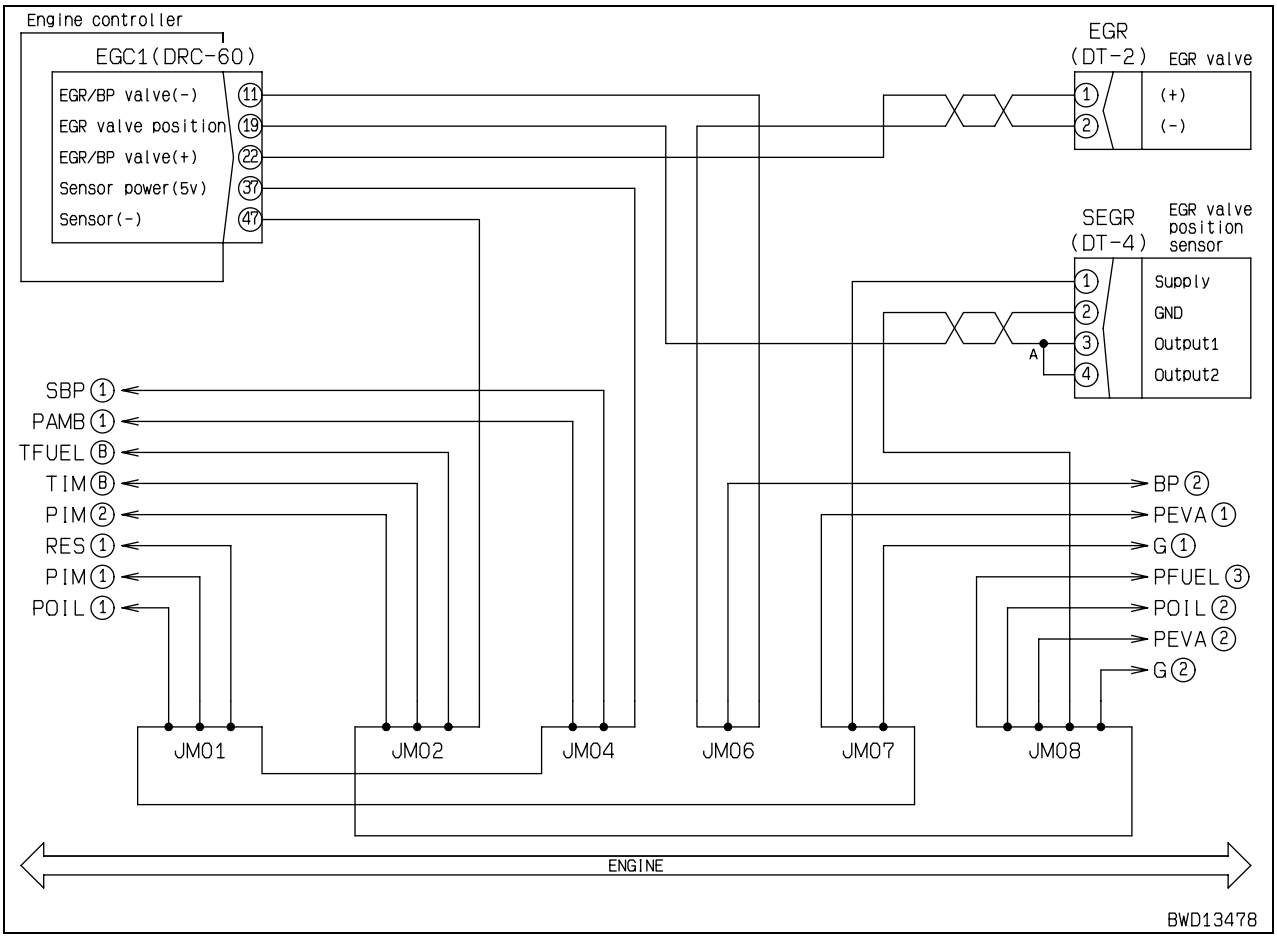

Failure code [CA2352] EGR Valve Sol Current Low Error

Action code	Failure code	Trouble	EGR Valve Sol Current Low Error (Engine controller system)
E03	**CA2352**		
Contents of trouble	• There is disconnection in EGR valve solenoid drive circuit.		
Action of controller	• Limits engine output and continues operation. • Closes EGR valve and bypass valve.		
Problem that appears on machine	• Engine output drops.		
Related information			

Possible causes and standard value in normal state	Cause	Standard value in normal state/Remarks on troubleshooting
	Carry out troubleshooting failure code [**CA2351**].	

Failure code [CA2555] Grid Htr Relay Volt Low Error

Action code	Failure code	Trouble	Grid Htr Relay Volt Low Error (Engine controller system)
E01	**CA2555**		
Contents of trouble	• There is disconnection in intake air heater relay circuit.		
Action of controller	• None in particular.		
Problem that appears on machine	• Engine does not start easily at low temperature.		
Related information	• Engine coolant temperature can be checked with monitoring function. (Code: 04107 Coolant Temperature)		

Possible causes and standard value in normal state	Cause	Standard value in normal state/Remarks on troubleshooting
	Carry out troubleshooting failure code [**CA2556**].	

Failure code [CA2556] Grid Htr Relay Volt High Error

Action code	Failure code	Trouble	Grid Htr Relay Volt High Error (Engine controller system)
E01	**CA2556**		
Contents of trouble	• There is short circuit in intake air heater relay.		
Action of controller	• None in particular.		
Problem that appears on machine	• Engine does not start easily at low temperature.		
Related information	• Engine controller has automatic preheating function, which is turned ON when engine coolant temperature is below -5 °C (for up to 30 seconds). • Engine coolant temperature can be checked with monitoring function. (Code: 04107 Coolant Temperature)		

	Cause		Standard value in normal state/Remarks on troubleshooting			
Possible causes and standard value in normal state	1	Defective intake air heater relay (Internal trouble)	★ Prepare with starting switch OFF, then carry out troubleshooting without turning starting switch ON.			
			PHR (male)		Resistance	
			Between (1) – (2)		200 – 400 Ω	
	2	Disconnection in wiring harness (Disconnection in wiring or defective contact in connector)	★ Prepare with starting switch OFF, then carry out troubleshooting without turning starting switch ON.			
			Wiring harness between EGC2 (female) (40) – PHR (female) (1)		Resistance	Max. 1 Ω
			Wiring harness between PHR (female) (2) – chassis ground (GND03)		Resistance	Max. 1 Ω
	3	Ground fault in wiring harness (Contact with GND circuit)	★ Prepare with starting switch OFF, then carry out troubleshooting without turning starting switch ON.			
			Wiring harness between EGC2 (female) (40) – PHR (female) (1) and chassis ground		Resistance	Min. 1 MΩ
	4	Defective engine controller	★ Prepare with starting switch OFF, then turn starting switch ON and carry out troubleshooting.			
			EGC2	Coolant temperature	Voltage	
			Between (40) – chassis ground	-5 °C or higher	Max. 1 V	
				Below -5 °C	20 – 30 V	

Circuit diagram related to preheating/starting/charging of engine

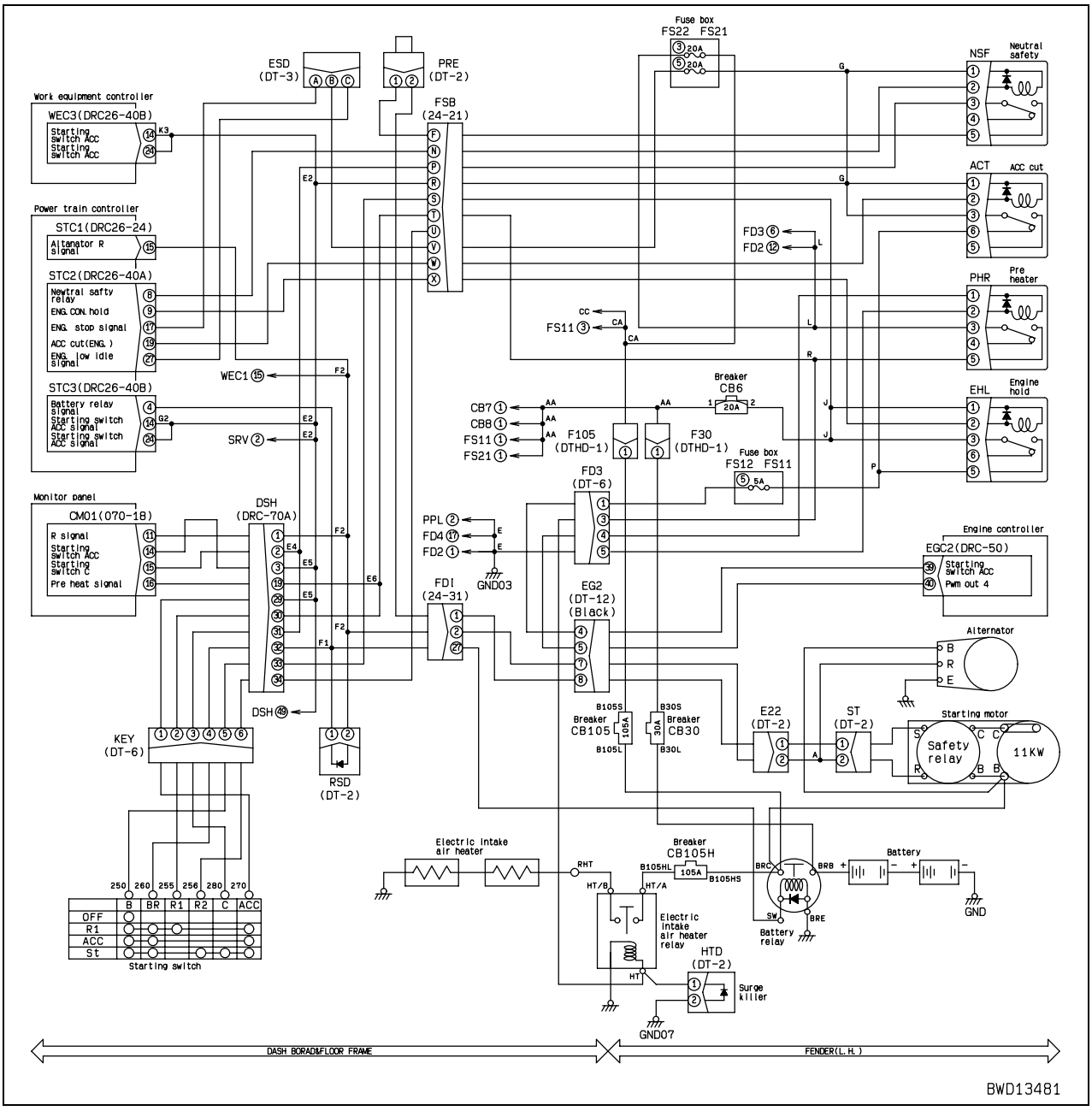

Failure code [D110KA] Battery relay: Disconnection

Action code	Failure code	Trouble	Battery relay: Disconnection (Power train controller system)
–	D110KA		
Contents of trouble	• Turns signal to battery relay holding circuit, no current flows.		
Action of controller	• Turns signal to battery relay holding circuit OFF.		
Problem that appears on machine	• Problem may occur in writing data into ROM (non-volatile memory) of each controller.		
Related information	• tate of battery relay holding circuit signal can be checked with monitoring function. (Code: 60600 BR Hold Relay) • Method of reproducing failure code: Turn starting switch ON → OFF.		

	Cause		Standard value in normal state/Remarks on troubleshooting			
Possible causes and standard value in normal state	1	Defective battery relay (Internal disconnection)	★ Prepare with starting switch OFF, then carry out troubleshooting without turning starting switch ON.			
			Battery relay	Continuity		
			Between terminals SW – BRE	There is continuity		
	2	Disconnection in wiring harness (Disconnection in wiring or defective contact in connector)	★ Prepare with starting switch OFF, then carry out troubleshooting without turning starting switch ON.			
			Wiring harness between STC3 (female) (4) – terminal SW		Resistance	Max. 1 Ω
			Wiring harness between terminal BRE and chassis ground		Resistance	Max. 1 Ω
	3	Hot short (Short circuit with 24V circuit) in wiring harness	★ Prepare with starting switch OFF, then turn starting switch ON and carry out troubleshooting.			
			Wiring harness between STC3 (female) (4) – terminal SW, terminal 260, terminal AL/R or circuit branch end and chassis ground		Voltage	Max. 1 V
	4	Defective power train controller	★ Prepare with starting switch OFF, then carry out troubleshooting without turning starting switch ON.			
			STC3	Starting switch	Voltage	
			Between (4) – chassis ground	OFF	Max. 1 V	

Circuit diagram related to driving of battery relay

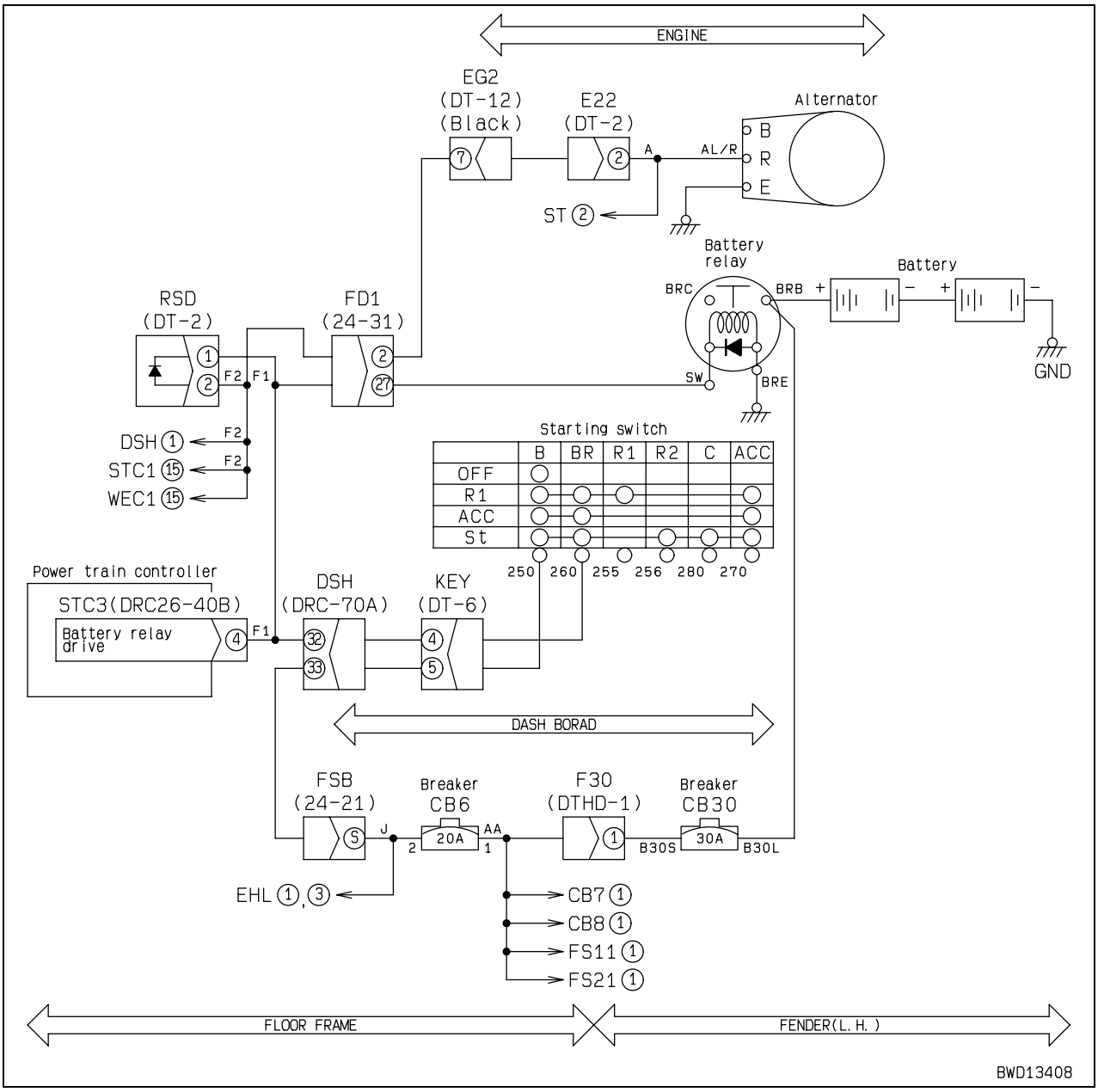

Failure code [D110KB] Battery Relay: Drive Short Circuit

Action code	Failure code	Trouble	Battery Relay: Drive Short Circuit (Power train controller system)
–	D110KB		
Contents of trouble	• When signal was output to battery relay circuit, abnormal current flowed.		
Action of controller	• Turns signal to battery relay holding circuit OFF.		
Problem that appears on machine	• Problem may occur in writing data into ROM (non-volatile memory) of each controller.		
Related information	• State of battery relay holding circuit signal can be checked with monitoring function. (Code: 60600 BR Hold Relay) • Method of reproducing failure code: Turn starting switch ON → OFF.		

	Cause		Standard value in normal state/Remarks on troubleshooting		
Possible causes and standard value in normal state	1	Defective battery relay (Internal short circuit)	★ Prepare with starting switch OFF, then carry out troubleshooting without turning starting switch ON.		
			Battery relay	Continuity/Resistance	
			Between terminals SW – BRE	There is continuity	
			Between terminal SW – chassis ground	Min. 1 MΩ	
	2	Ground fault in wiring harness (Contact with GND circuit)	★ Prepare with starting switch OFF, then carry out troubleshooting without turning starting switch ON.		
			Wiring harness between STC3 (female) (4) – terminal SW, terminal 260 or RSD (female) (1) and chassis ground	Resistance	Min. 1 MΩ
	3	Defective power train controller	★ Prepare with starting switch OFF, then turn starting switch ON and carry out troubleshooting.		
			STC3	Starting switch	Voltage
			Between (4) – chassis ground	ON	20 – 30 V

Circuit diagram related to driving of battery relay

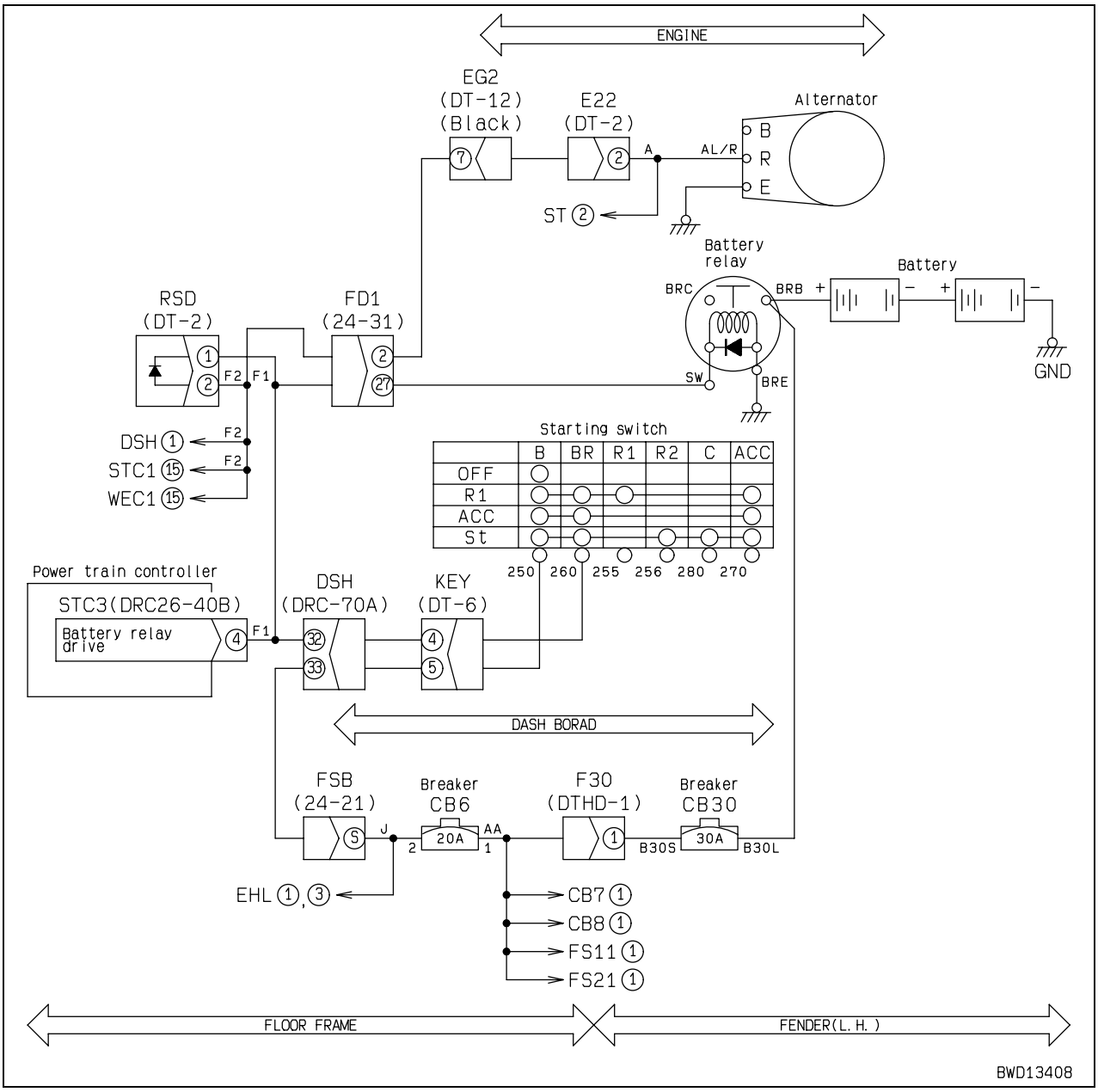

Failure code [D130KA] Neutral relay: Disconnection

Action code	Failure code	Trouble	Neutral relay: Disconnection (Power train controller system)
E02	**D130KA**		
Contents of trouble	• When ground circuit of neutral safety relay circuit is disconnected, no current flows.		
Action of controller	• Turns output of neutral safety relay circuit OFF.		
Problem that appears on machine	• Engine cannot be started.		
Related information	• State of neutral safety relay circuit signal can be checked with monitoring function. (Code: 59099 T/M Lock Relay) • Method of reproducing failure code: Turn starting switch ON + Operate parking brake lever (Free). • This failure code detects abnormality on primary side (coil side) of neutral safety relay but does not detect abnormality on secondary side (contact side).		

	Cause		Standard value in normal state/Remarks on troubleshooting			
Possible causes and standard value in normal state	1	Defective fuse (FS2-5)	If fuse is broken, circuit probably has ground fault (See cause 4).			
	2	Defective neutral safety relay (Internal disconnection)	★ Prepare with starting switch OFF, then carry out troubleshooting without turning starting switch ON.			
			NSF (male)		Resistance	
			Between (1) – (2)		300 – 600 Ω	
	3	Disconnection in wiring harness (Disconnection in wiring or defective contact in connector)	★ Prepare with starting switch OFF, then carry out troubleshooting without turning starting switch ON.			
			Wiring harness between STC2 (female) (8) – NSF (female) (2)		Resistance	Max. 1 Ω
			Wiring harness between NSF (female) (1) – FS21 (5)		Resistance	Max. 1 Ω
	4	Ground fault in wiring harness (Contact with GND circuit)	★ Prepare with starting switch OFF, then carry out troubleshooting without turning starting switch ON.			
			Wiring harness between STC2 (female) (8) – NSF (female) (2) and chassis ground		Resistance	Min. 1 MΩ
			Wiring harness between NSF (female) (1) – FS21 (5) or circuit branch end and chassis ground		Resistance	Min. 1 MΩ
	5	Defective power train controller	★ Prepare with starting switch OFF, then turn starting switch ON and carry out troubleshooting.			
			STC2	Parking brake lever	Voltage	
			Between (8) – chassis ground	Lock	Max. 1 V	
				Free	20 – 30 V	

Circuit diagram related to neutral safety relay

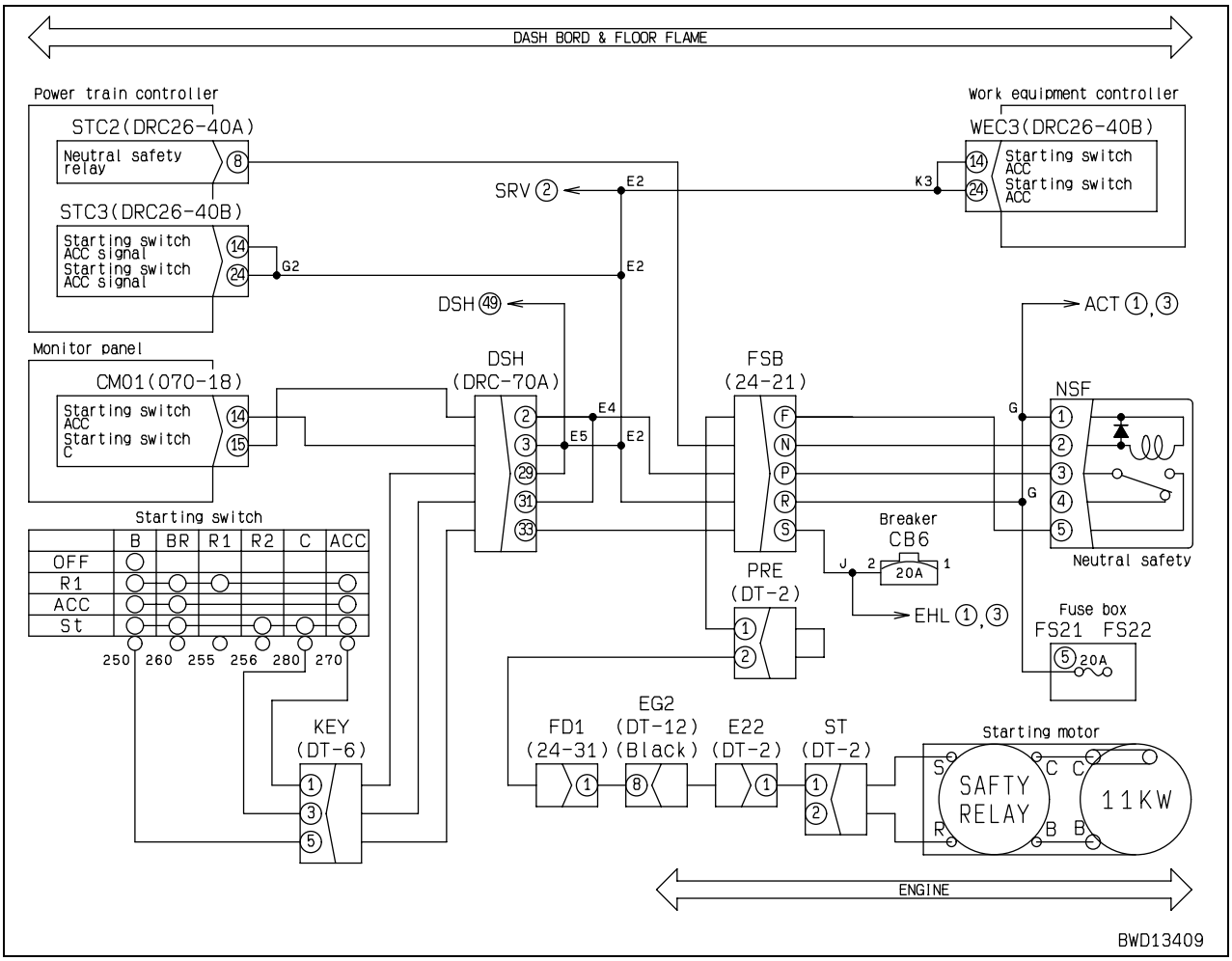

Failure code [D130KB] Neutral relay: Short circuit

Action code	Failure code	Trouble	Neutral relay: Short circuit (Power train controller system)
E02	**D130KB**		
Contents of trouble	• When ground circuit of neutral safety relay was disconnected, abnormal current flowed.		
Action of controller	• Turns output of neutral safety relay circuit OFF.		
Problem that appears on machine	• Engine cannot be started.		
Related information	• State of neutral safety relay circuit signal can be checked with monitoring function. (Code: 59099 T/M Lock Relay) • Method of reproducing failure code: Turn starting switch ON + Operate parking brake lever (Free). • This failure code detects abnormality on primary side (coil side) of neutral safety relay but does not detect abnormality on secondary side (contact side).		

	Cause		Standard value in normal state/Remarks on troubleshooting		
Possible causes and standard value in normal state	1	Defective neutral safety relay (Internal short circuit)	★ Prepare with starting switch OFF, then carry out troubleshooting without turning starting switch ON.		
			NSF (male)	Resistance	
			Between (1) – (2)	300 – 600 Ω	
	2	Hot short (Short circuit with 24V circuit) in wiring harness	★ Prepare with starting switch OFF, then turn starting switch ON and carry out troubleshooting.		
			Wiring harness between STC2 (female) (8) – NSF (female) (2) and chassis ground	Voltage	Max. 1 V
	3	Defective power train controller	★ Prepare with starting switch OFF, then turn starting switch ON and carry out troubleshooting.		
			STC2	Parking brake lever	Voltage
			Between (8) – chassis ground	Lock	Max. 1 V
				Free	20 – 30 V

Circuit diagram related to neutral safety relay

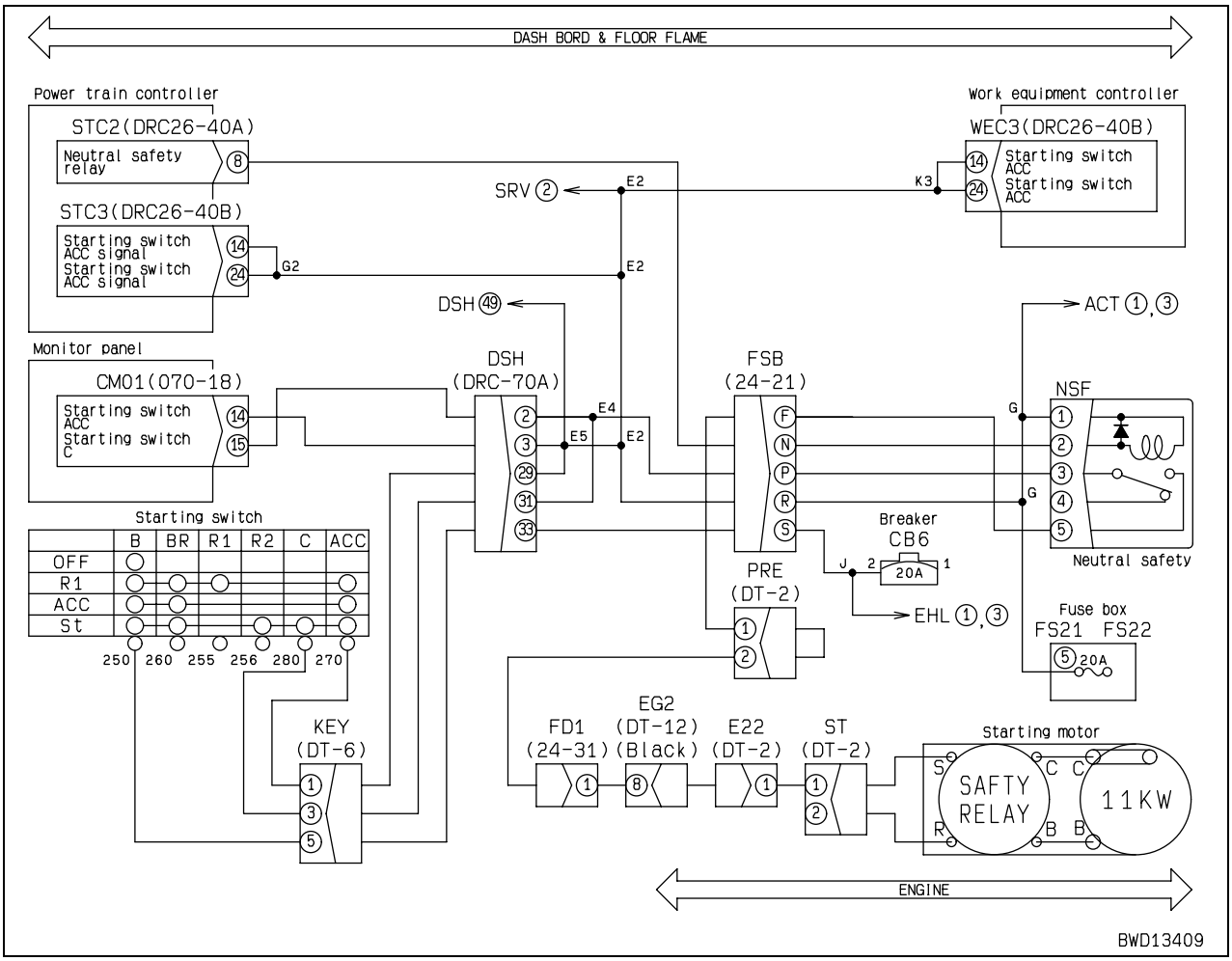

Failure code [D161KA] Back-up alarm relay: Disconnection

Action code	Failure code	Trouble	Back-up alarm relay: Disconnection (Power train controller system)
E01	**D161KA**		
Contents of trouble	• When ground circuit of back-up alarm relay circuit is disconnected, no current flows.		
Action of controller	• Turns output of back-up alarm relay circuit OFF.		
Problem that appears on machine	• Back-up alarm does not sound		
Related information	• State of back-up alarm relay circuit signal can be checked with monitoring function. (Code: 70400 Back Alarm Relay) • Method of reproducing failure code: Turn starting switch ON + Operate PCCS lever (R: Reverse). • This failure code detects abnormality on primary side (coil side) of back-up alarm relay but does not detect abnormality on secondary side (contact side).		

	Cause		Standard value in normal state/Remarks on troubleshooting			
Possible causes and standard value in normal state	1	Defective fuse (FS1-2)	If fuse is broken, circuit probably has ground fault (See cause 4).			
	2	Defective back-up alarm relay (Internal disconnection)	★ Prepare with starting switch OFF, then carry out troubleshooting without turning starting switch ON.			
			BKA (male)		Resistance	
			Between (1) – (2)		300 – 600 Ω	
	3	Disconnection in wiring harness (Disconnection in wiring or defective contact in connector)	★ Prepare with starting switch OFF, then carry out troubleshooting without turning starting switch ON.			
			Wiring harness between STC2 (female) (18) – BKA (female) (2)		Resistance	Max. 1 Ω
			Wiring harness between BKA (female) (1) – FS12 (2)		Resistance	Max. 1 Ω
	4	Ground fault in wiring harness (Contact with GND circuit)	★ Prepare with starting switch OFF, then carry out troubleshooting without turning starting switch ON.			
			Wiring harness between STC2 (female) (18) – BKA (female) (2) or circuit branch end and chassis ground		Resistance	Min. 1 MΩ
			Wiring harness between BKA (female) (1), (3) – FS12 (2) and chassis ground		Resistance	Min. 1 MΩ
	5	Defective power train controller	★ Prepare with starting switch OFF, then turn starting switch ON and carry out troubleshooting.			
			STC2	PCCS lever (Directional)	Voltage	
			Between (18) – chassis ground	N	20 – 30 V	
				R (Reverse)	Max. 1 V	

Circuit diagram related to back-up alarm relay

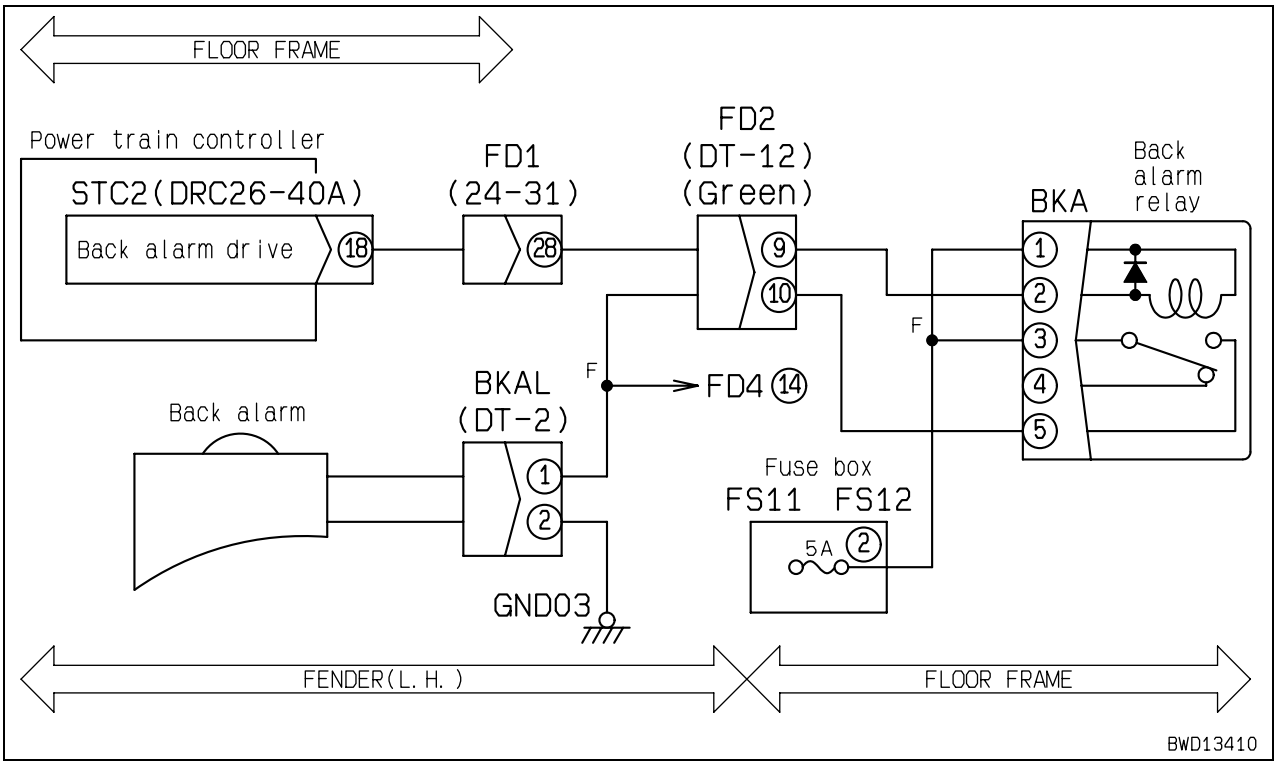

Failure code [D161KB] Back-up alarm relay: Short circuit

Action code	Failure code	Trouble	Back-up alarm relay: Short circuit (Power train controller system)
E01	**D161KB**		
Contents of trouble	• When ground circuit of back-up alarm relay was disconnected, abnormal current flowed.		
Action of controller	• Turns output of back-up alarm relay circuit OFF.		
Problem that appears on machine	• Back-up alarm does not sound.		
Related information	• State of back-up alarm relay circuit signal can be checked with monitoring function. (Code: 70400 Back Alarm Relay) • Method of reproducing failure code: Turn starting switch ON + Operate PCCS lever (R: Reverse) • This failure code detects abnormality on primary side (coil side) of back-up alarm relay but does not detect abnormality on secondary side (contact side).		

	Cause		Standard value in normal state/Remarks on troubleshooting		
Possible causes and standard value in normal state	1	Defective back-up alarm relay (Internal short circuit)	★ Prepare with starting switch OFF, then carry out troubleshooting without turning starting switch ON.		
			BKA (male)	Resistance	
			Between (1) – (2)	300 – 600 Ω	
	2	Hot short (Short circuit with 24V circuit) in wiring harness	★ Prepare with starting switch OFF, then turn starting switch ON and carry out troubleshooting.		
			Wiring harness between STC2 (female) (18) – BKA (female) (2) or circuit branch end and chassis ground	Voltage	Max. 1 V
	3	Defective power train controller	★ Prepare with starting switch OFF, then turn starting switch ON and carry out troubleshooting.		
			STC2	PCCS lever (Directional)	Voltage
			Between (18) – chassis ground	N	20 – 30 V
				R (Reverse)	Max. 1 V

Circuit diagram related to back-up alarm relay

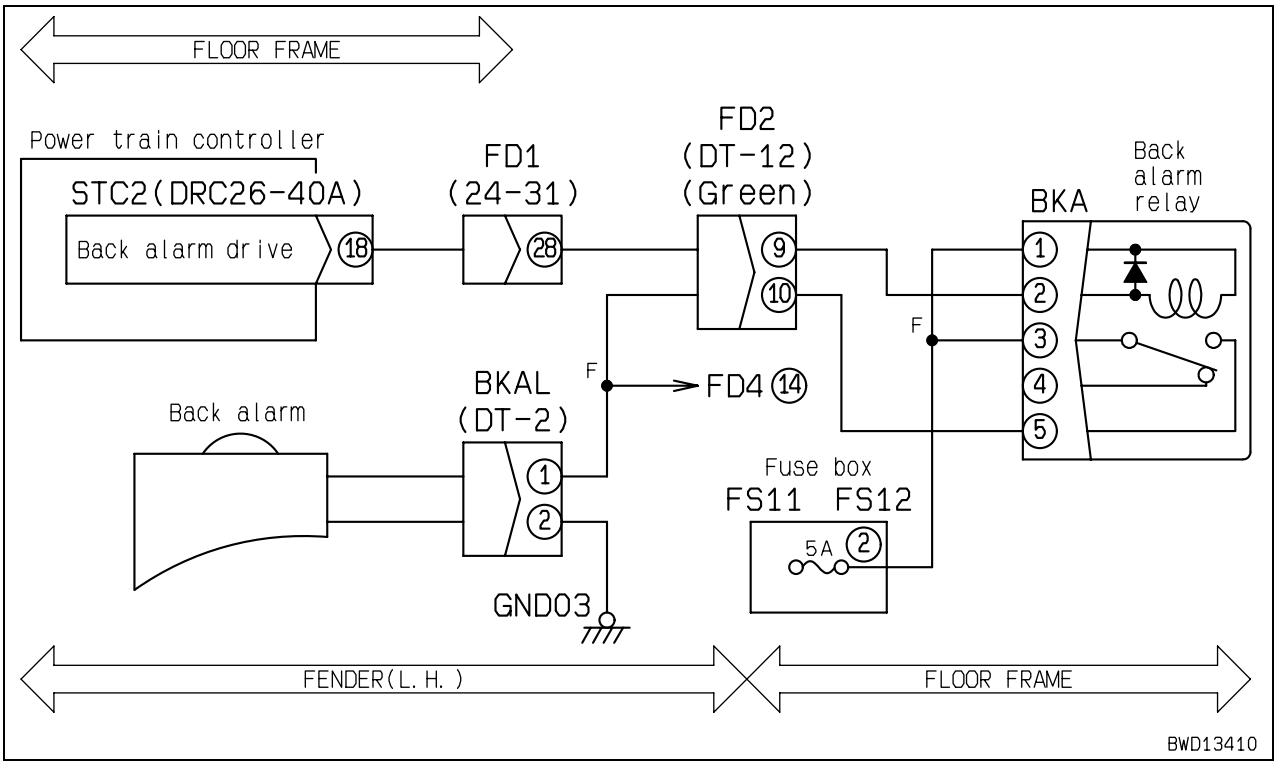

Failure code [D190KA] ACC signal relay: Disconnection

Action code	Failure code	Trouble	ACC signal relay: Disconnection (Power train controller system)
–	**D190KA**		
Contents of trouble	• When ground circuit of ACC signal drive relay circuit is disconnected, no current flows.		
Action of controller	• Turns signal to ACC signal drive relay circuit OFF.		
Problem that appears on machine	• Turbo-timer function does not operate (if turbo-timer is installed). • Machine is not affected particularly (if turbo-timer is not installed).		
Related information	• State of ACC signal drive relay circuit signal can be checked with monitoring function. (Code: 60500 ENG Hold Relay) • Method of reproducing failure code: Turn starting switch ON → OFF (if turbo-timer is installed). • This failure code detects abnormality on primary side (coil side) of ACC signal drive relay but does not detect abnormality on secondary side (contact side).		

	Cause		Standard value in normal state/Remarks on troubleshooting			
Possible causes and standard value in normal state	1	Defective ACC signal drive relay (Internal disconnection)	★ Prepare with starting switch OFF, then carry out troubleshooting without turning starting switch ON.			
			EHL (male)	Resistance		
			Between (1) – (2)	200 – 400 Ω		
	2	Disconnection in wiring harness (Disconnection in wiring or defective contact in connector)	★ Prepare with starting switch OFF, then carry out troubleshooting without turning starting switch ON.			
			Wiring harness between STC2 (female) (9) – EHL (female) (2)	Resistance	Max. 1 Ω	
			Wiring harness between EHL (female) (1) – branch point (J)	Resistance	Max. 1 Ω	
	3	Hot short (Short circuit with 24V circuit) in wiring harness	★ Prepare with starting switch OFF, then turn starting switch ON and carry out troubleshooting.			
			Wiring harness between STC2 (female) (9) – EHL (female) (2) and chassis ground	Voltage	Max. 1 V	
	4	Defective power train controller	★ Prepare with starting switch OFF, then carry out troubleshooting without turning starting switch ON.			
			STC2 (female)	Resistance		
			Between (9) – chassis ground	200 – 400 Ω		

Circuit diagram related to ACC signal drive relay

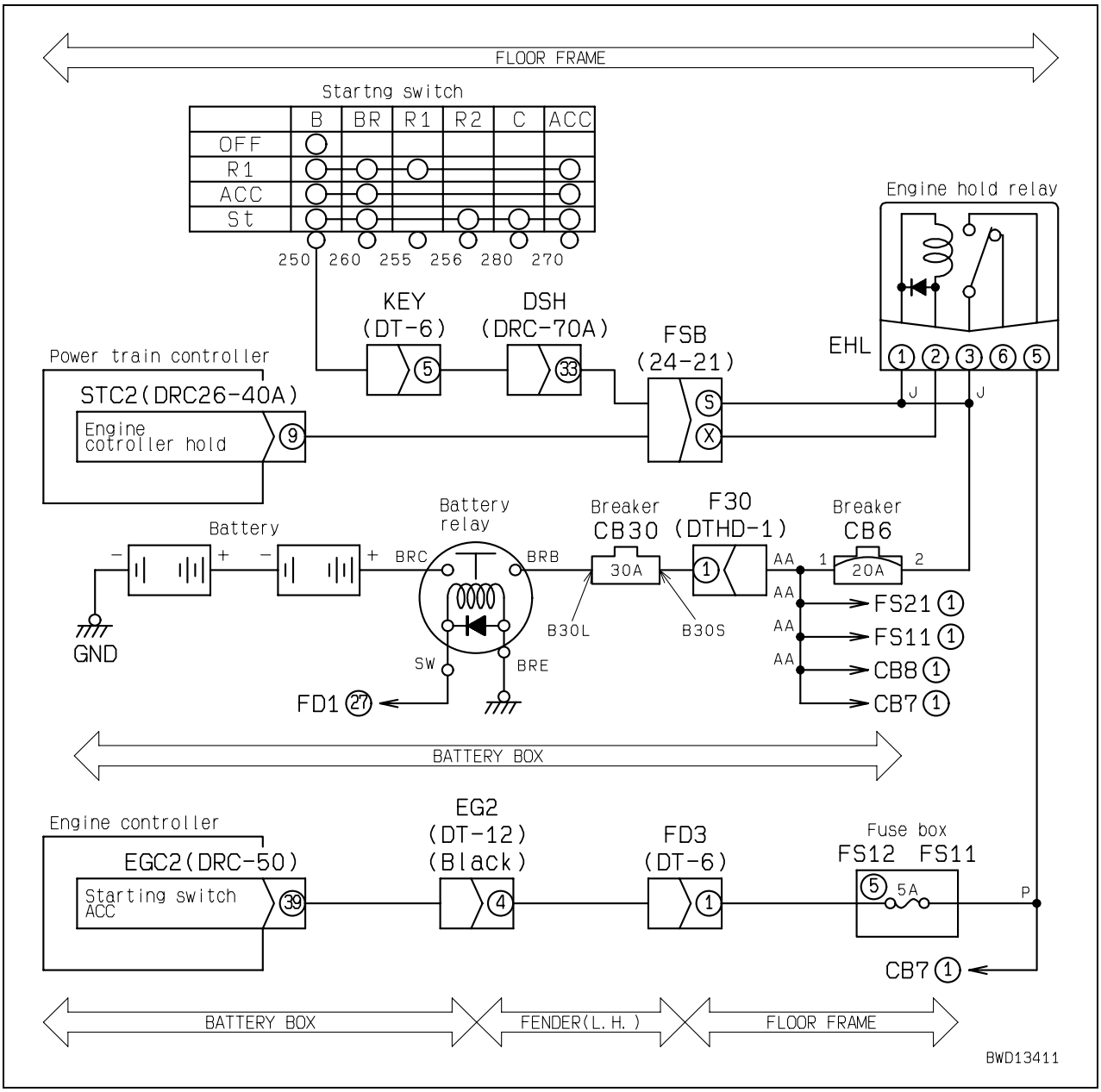

Failure code [D190KB] ACC signal relay: Short circuit

Action code	Failure code	Trouble	ACC signal relay: Short circuit (Power train controller system)
–	**D190KB**		
Contents of trouble	• When ground circuit of ACC signal drive relay was disconnected, abnormal current flowed.		
Action of controller	• Turns output of ACC signal drive relay circuit OFF.		
Problem that appears on machine	• Turbo-timer function does not operate (if turbo-timer is installed). • Machine is not affected particularly (if turbo-timer is not installed).		
Related information	• State of ACC signal drive relay circuit signal can be checked with monitoring function. (Code: 60500 ENG Hold Relay) • Method of reproducing failure code: Turn starting switch ON → OFF (if turbo-timer is installed). • This failure code detects abnormality on primary side (coil side) of ACC signal drive relay but does not detect abnormality on secondary side (contact side).		

	Cause		Standard value in normal state/Remarks on troubleshooting			
Possible causes and standard value in normal state	1	Defective ACC signal drive relay (Short circuit)	★ Prepare with starting switch OFF, then carry out troubleshooting without turning starting switch ON.			
			EHL (male)	Resistance		
			Between (1) – (2)	200 – 400 Ω		
	2	Ground fault in wiring harness (Contact with GND circuit)	★ Prepare with starting switch OFF, then carry out troubleshooting without turning starting switch ON.			
			Wiring harness between STC2 (female) (9) – EHL (female) (2) and chassis ground	Resistance	1 MΩ	
	3	Defective power train controller	★ Prepare with starting switch OFF, then carry out troubleshooting without turning starting switch ON.			
			STC2 (female)	Resistance		
			Between (9) – chassis ground	200 – 400 Ω		

Circuit diagram related to ACC signal drive relay

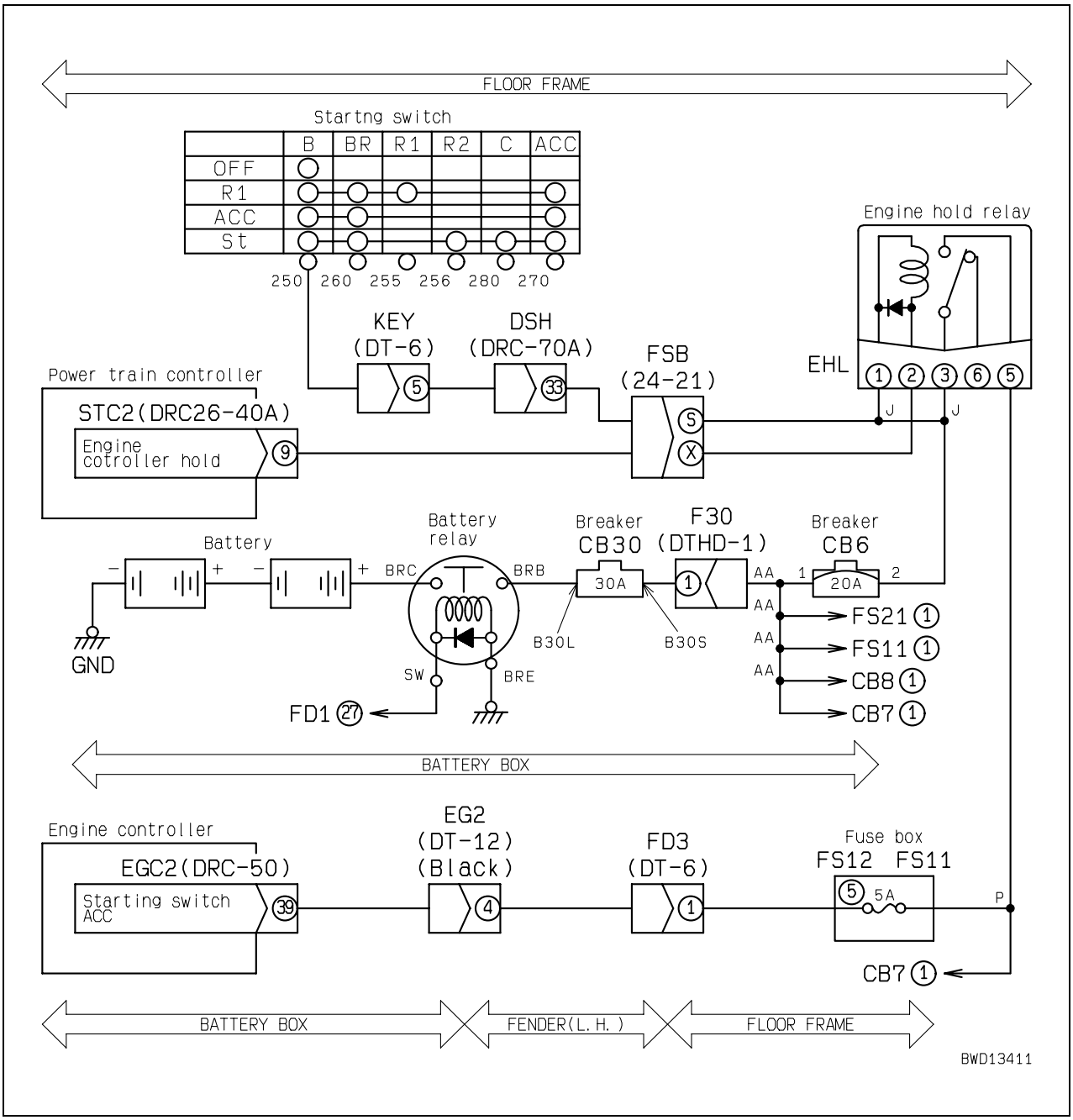

Failure code [D5ZKKX] Throttle Dial: Out of normal range

Action code	Failure code	Trouble	Throttle Dial: Out of normal range (Power train controller system)
E03	**D5ZKKX**		
Contents of trouble	• Signal voltage of fuel control dial is below 0.30 V or above 4.55 V.		
Action of controller	• Continues control with decelerator pedal potentiometer signal. • Limits operation of engine and transmission.		
Problem that appears on machine	• Once machine is stopped, engine speed is limited to medium (half). • Once machine is stopped, travel is limited to F1 and R1.		
Related information	• State of fuel control dial can be checked with monitoring function. (Code: 03000 Fuel Dial Sensor) • Method of reproducing failure code: Turn starting switch ON.		

	Cause		Standard value in normal state/Remarks on troubleshooting		
Possible causes and standard value in normal state	1	Defective sensor 5V power supply system	If failure code [**DBE7KK**] is also displayed, carry out troubleshooting for it first.		
	2	Defective fuel control dial (Internal disconnection or short circuit)	★ Prepare with starting switch OFF, then carry out troubleshooting without turning starting switch ON.		
			DIAL (male)	Resistance	
			Between (1) – (3)	4.0 – 6.0 kΩ	
			Between (1) – (2)	0.25 – 7.0 kΩ	
			Between (2) – (3)	0.25 – 7.0 kΩ	
	3	Disconnection in wiring harness (Disconnection in wiring or defective contact in connector)	★ Prepare with starting switch OFF, then carry out troubleshooting without turning starting switch ON.		
			Wiring harness between STC1 (female) (22) – DIAL (female) (1)	Resistance	Max. 1 Ω
			Wiring harness between STC1 (female) (1) –DIAL (female) (2)	Resistance	Max. 1 Ω
	4	Ground fault in wiring harness (Contact with GND circuit)	★ Prepare with starting switch OFF, then carry out troubleshooting without turning starting switch ON.		
			Wiring harness between STC1 (female) (1) – DIAL (female) (2) and chassis ground	Resistance	Min. 1 MΩ
	5	Hot short (Contact with GND circuit) in wiring harness	★ Prepare with starting switch OFF, then turn starting switch ON and carry out troubleshooting.		
			Wiring harness between STC1 (female) (1) – DIAL (female) (2) and chassis ground	Voltage	Max. 1 V
	6	Defective power train controller	★ Prepare with starting switch OFF, then turn starting switch ON and carry out troubleshooting.		
			STC1	Voltage	
			Between (1) – (21)	0.30 – 4.33 V	

Circuit diagram related to fuel control dial

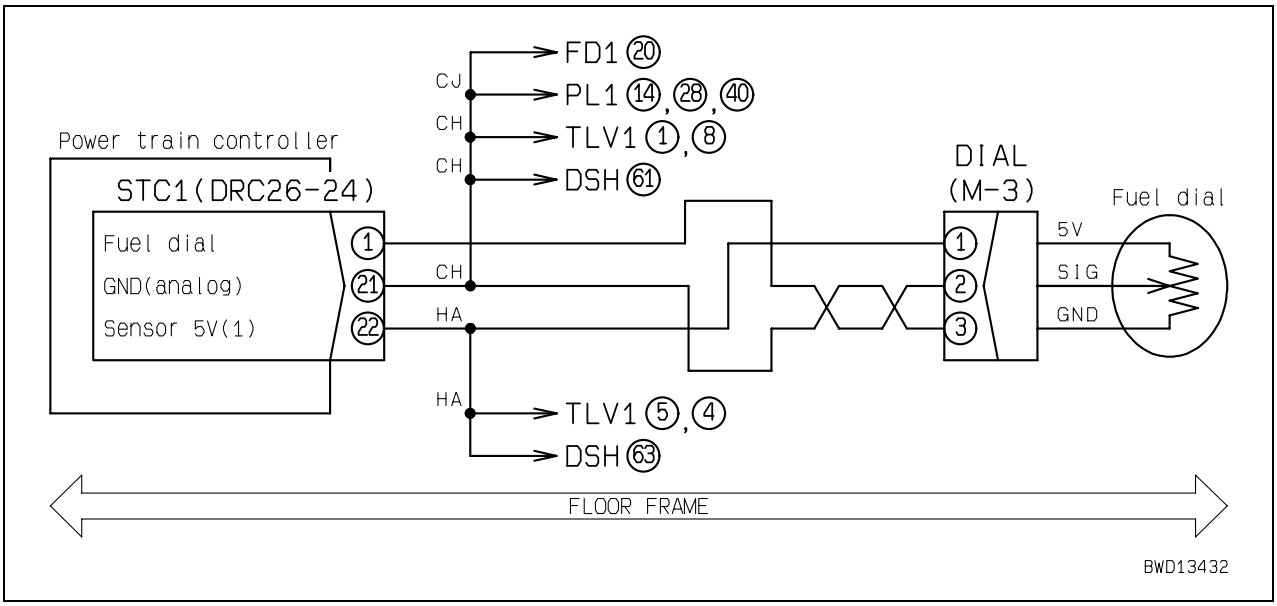

Failure code [DAFRKR] CAN Disconnection (Monitor)

Action code	Failure code	Trouble	CAN Disconnection (Monitor) (Machine monitor system)
E03	**DAFRKR**		
Contents of trouble	• Machine monitor cannot recognize engine controller, power train controller, or work equipment controller in CAN communication circuit.		
Action of controller	• Limits operation of engine and transmission.		
Problem that appears on machine	• System may not operate normally. • Once machine is stopped, engine speed is limited to medium (half). • Once machine is stopped, travel is limited to F1 and R1.		
Related information	• Method of reproducing failure code: Turn starting switch ON.		

	Cause		Standard value in normal state/Remarks on troubleshooting		
Possible causes and standard value in normal state	1	Disconnection in wiring harness (Disconnection in wiring or defective contact in connector)	★ Prepare with starting switch OFF, then carry out troubleshooting without turning starting switch ON.		
			Wiring harness between CM02 (female) (8), (9) – EGC2 (female) (46), STC2 (female) (32) or WEC2 (female) (32)	Resistance	Max. 1 Ω
			Wiring harness between CM02 (female) (10) – EGC2 (female) (47), STC2 (female) (22) or WEC2 (female) (22)	Resistance	Max. 1 Ω
	2	Ground fault in wiring harness (Contact with GND circuit)	★ Prepare with starting switch OFF, then carry out troubleshooting without turning starting switch ON.		
			Wiring harness between CM02 (female) (8), (9) – EGC2 (female) (46), STC2 (female) (32), WEC2 (female) (32), ACCN (female) (17), SRV (male) (3) or CA1 (female) (A) and chassis ground	Resistance	Min. 1 MΩ
			Wiring harness between CM02 (female) (10) – EGC2 (female) (47), STC2 (female) (22), WEC2 (female) (22), ACCN (female) (18), SRV (male) (10) or CA1 (female) (B) and chassis ground	Resistance	Min. 1 MΩ
	3	Hot short (Short circuit with 24V circuit) in wiring harness	★ Prepare with starting switch OFF, then turn starting switch ON and carry out troubleshooting.		
			Wiring harness between CM02 (female) (8), (9) – EGC2 (female) (46), STC2 (female) (32), WEC2 (female) (32), ACCN (female) (17), SRV (male) (3) or CA1 (female) (A) and chassis ground	Voltage	Max. 1 V
			Wiring harness between CM02 (female) (10) – EGC2 (female) (47), STC2 (female) (22), WEC2 (female) (22), ACCN (female) (18), SRV (male) (10) or CA1 (female) (B) and chassis ground	Voltage	Max. 1 V
	4	Defective CAN terminal resistance (Internal disconnection or short circuit)	★ Prepare with starting switch OFF, then carry out troubleshooting without turning starting switch ON.		
			CA1 (male)	Resistance	
			Between (A) – (B)	Approx. 120 Ω	
	5	Defective machine monitor or controller	If causes 1 – 4 are not detected, machine monitor, engine controller, power train controller or work equipment controller may be defective. (Since trouble is in system, troubleshooting cannot be carried out.)		

Circuit diagram related to CAN communication

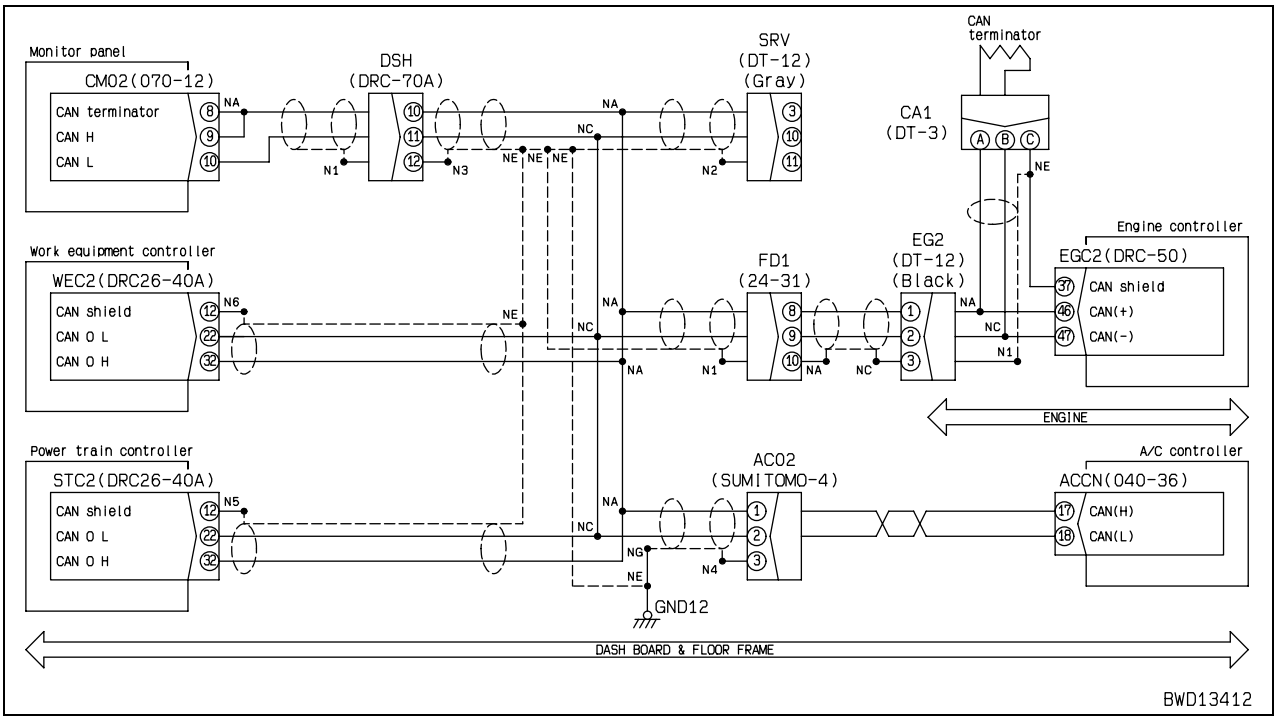

Failure code [DB2RKR] CAN Disconnection (Engine controller)

Action code	Failure code	Trouble	CAN Disconnection (Engine controller) (Power train controller system)
E03	**DB2RKR**		
Contents of trouble	• Power train controller cannot recognize engine controller in CAN communication circuit.		
Action of controller	• Limits operation of engine and transmission.		
Problem that appears on machine	• System may not operate normally. • Once machine is stopped, engine speed is limited to medium (half). • Once machine is stopped, travel is limited to F1 and R1.		
Related information	• Method of reproducing failure code: Turn starting switch ON.		

	Cause		Standard value in normal state/Remarks on troubleshooting		
Possible causes and standard value in normal state	1	Disconnection in wiring harness (Disconnection in wiring or defective contact in connector)	★ Prepare with starting switch OFF, then carry out troubleshooting without turning starting switch ON.		
			Wiring harness between CM02 (female) (8), (9) – EGC2 (female) (46), STC2 (female) (32) or WEC2 (female) (32)	Resistance	Max. 1 Ω
			Wiring harness between CM02 (female) (10) – EGC2 (female) (47), STC2 (female) (22) or WEC2 (female) (22)	Resistance	Max. 1 Ω
	2	Ground fault in wiring harness (Contact with GND circuit)	★ Prepare with starting switch OFF, then carry out troubleshooting without turning starting switch ON.		
			Wiring harness between CM02 (female) (8), (9) – EGC2 (female) (46), STC2 (female) (32), WEC2 (female) (32), ACCN (female) (17), SRV (male) (3) or CA1 (female) (A) and chassis ground	Resistance	Min. 1 MΩ
			Wiring harness between CM02 (female) (10) – EGC2 (female) (47), STC2 (female) (22), WEC2 (female) (22), ACCN (female) (18), SRV (male) (10) or CA1 (female) (B) and chassis ground	Resistance	Min. 1 MΩ
	3	Hot short (Contact with GND circuit) in wiring harness	★ Prepare with starting switch OFF, then turn starting switch ON and carry out troubleshooting.		
			Wiring harness between CM02 (female) (8), (9) – EGC2 (female) (46), STC2 (female) (32), WEC2 (female) (32), ACCN (female) (17), SRV (male) (3) or CA1 (female) (A) and chassis ground	Voltage	Max. 1 V
			Wiring harness between CM02 (female) (10) – EGC2 (female) (47), STC2 (female) (22), WEC2 (female) (22), ACCN (female) (18), SRV (male) (10) or CA1 (female) (B) and chassis ground	Voltage	Max. 1 V
	4	Defective CAN terminal resistance (Internal disconnection or short circuit)	★ Prepare with starting switch OFF, then carry out troubleshooting without turning starting switch ON.		
			CA1 (male)	Resistance	
			Between (A) – (B)	Approx. 120 Ω	
	5	Defective engine controller or power train controller	If causes 1 – 4 are not detected, engine controller or power train controller may be defective. (Since trouble is in system, troubleshooting cannot be carried out.)		

Circuit diagram related to CAN communication

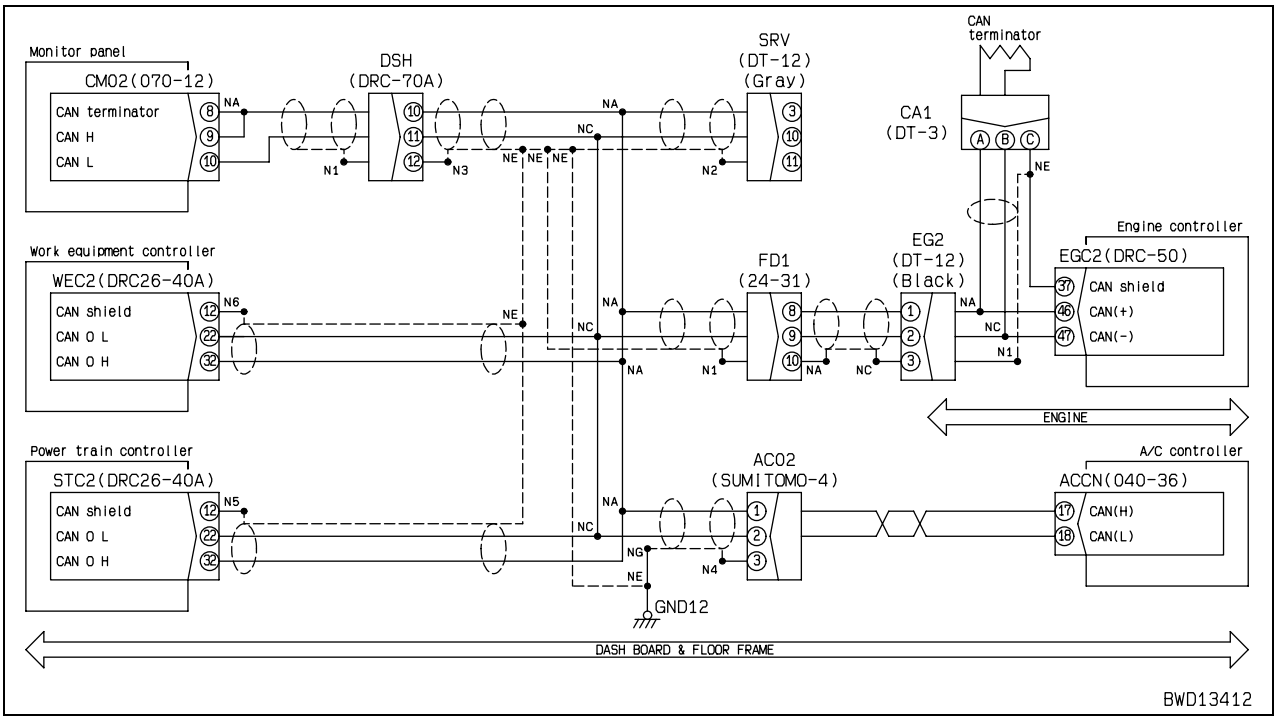

Failure code [DB90KK] WE controller: Source voltage reduction

Action code	Failure code	Trouble	WE controller: Source voltage reduction (Work equipment controller system)
E04	**DB90KK**		
Contents of trouble	• Source voltage of work equipment controller is below 17 V.		
Action of controller	• Limits operation of engine and transmission.		
Problem that appears on machine	• Machine monitor may not display normally. • Relays and solenoids may not be driven and system may not operate normally. • Once machine is stopped, engine speed is limited to medium (half). • Once machine is stopped, it cannot travel at all.		
Related information	• Source voltage of work equipment controller can be checked with adjusting function. (Code: 2022) • Method of reproducing failure code: Turn starting switch ON.		

	Cause		Standard value in normal state/Remarks on troubleshooting		
Possible causes and standard value in normal state	1	Defective circuit breaker (CB2, CB7, CB30 or CB105)	If circuit breaker is turned OFF, circuit probably has ground fault (See cause 3).		
	2	Disconnection in wiring harness (Disconnection in wiring or defective contact in connector)	★ Prepare with starting switch OFF, then carry out troubleshooting without turning starting switch ON.		
			Wiring harness between WEC3 (female) (1), (11) – CB7 (2)	Resistance	Max. 1 Ω
			Wiring harness between CB7 (1) – CB30 (B30S)	Resistance	Max. 1 Ω
			Wiring harness between CB30 (B30L) – terminal BRB	Resistance	Max. 1 Ω
			Wiring harness between WEC3 (female) (2), (12), (22) – CB2 (2)	Resistance	Max. 1 Ω
			Wiring harness between CB2 (1) – CB105 (B105S)	Resistance	Max. 1 Ω
			Wiring harness between CB105 (B105L) – terminal BRC	Resistance	Max. 1 Ω
			Wiring harness between WEC3 (female) (21), (31), (32), (33) – chassis ground (GND11)	Resistance	Max. 1 Ω
	3	Ground fault in wiring harness (Contact with GND circuit)	★ Prepare with starting switch OFF, then carry out troubleshooting without turning starting switch ON.		
			Wiring harness between WEC3 (female) (1), (11) – CB7 (2) or circuit branch end and chassis ground	Resistance	Min. 1 MΩ
			Wiring harness between CB7 (1) – CB30 (B30S) or circuit branch end and chassis ground	Resistance	Min. 1 MΩ
			Wiring harness between CB30 (B30L) – terminal BRB and chassis ground	Resistance	Min. 1 MΩ
			Wiring harness between WEC3 (female) (2), (12), (22) – CB2 (2) or WEPW (female) (A) and chassis ground	Resistance	Min. 1 MΩ
			Wiring harness between CB2 (1) – CB105 (B105S) or circuit branch end and chassis ground	Resistance	Min. 1 MΩ
			Wiring harness between CB105 (B105L) – terminal BRC and chassis ground	Resistance	Min. 1 MΩ

Possible causes and standard value in normal state	Cause		Standard value in normal state/Remarks on troubleshooting		
	4	Defective work equipment controller	★ Prepare with starting switch OFF, then carry out troubleshooting without turning starting switch ON.		
			WEC3	Starting switch	Voltage
			Between (1), (11) – (21), (31), (32), (33)	OFF	20 – 30 V
			Between (2), (12), (22) – (21), (31), (32), (33)	ON	20 – 30 V

Circuit diagram related to work equipment controller power supply

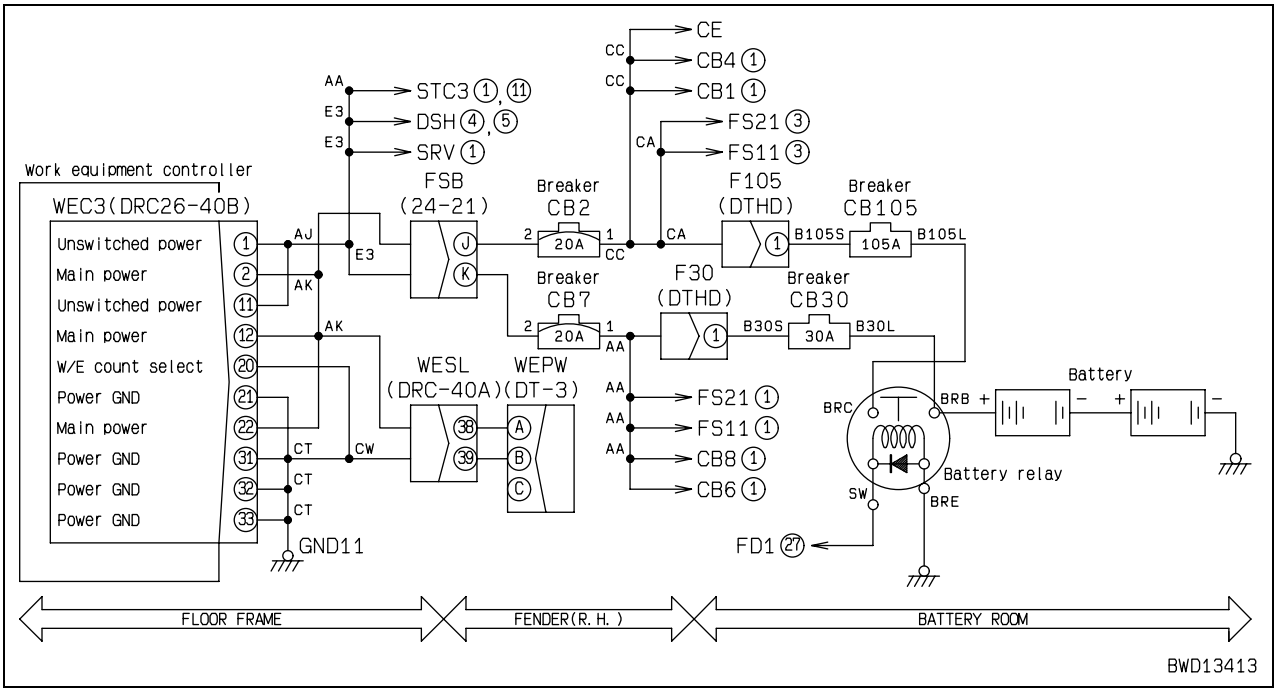

Failure code [DB90KR] PT controller: Can communication lost

Action code	Failure code	Trouble	PT controller: Can communication lost (Power train controller system)
E03	**DB90KR**		
Contents of trouble	• Power train controller cannot recognize machine monitor, engine controller or work equipment controller in CAN communication circuit.		
Action of controller	• Limits operation of engine and transmission.		
Problem that appears on machine	• System may not operate normally. • Once machine is stopped, engine speed is limited to medium (half). • Once machine is stopped, travel is limited to F1 and R1.		
Related information	• Method of reproducing failure code: Turn starting switch ON.		

	Cause		Standard value in normal state/Remarks on troubleshooting		
Possible causes and standard value in normal state	1	Disconnection in wiring harness (Disconnection in wiring or defective contact in connector)	★ Prepare with starting switch OFF, then carry out troubleshooting without turning starting switch ON.		
			Wiring harness between CM02 (female) (8), (9) – EGC2 (female) (46), STC2 (female) (32) or WEC2 (female) (32)	Resistance	Max. 1 Ω
			Wiring harness between CM02 (female) (10) – EGC2 (female) (47), STC2 (female) (22) or WEC2 (female) (22)	Resistance	Max. 1 Ω
	2	Ground fault in wiring harness (Contact with GND circuit)	★ Prepare with starting switch OFF, then carry out troubleshooting without turning starting switch ON.		
			Wiring harness between CM02 (female) (8), (9) – EGC2 (female) (46), STC2 (female) (32), WEC2 (female) (32), ACCN (female) (17), SRV (male) (3) or CA1 (female) (A) and chassis ground	Resistance	Min. 1 MΩ
			Wiring harness between CM02 (female) (10) – EGC2 (female) (47), STC2 (female) (22), WEC2 (female) (22), ACCN (female) (18), SRV (male) (10) or CA1 (female) (B) and chassis ground	Resistance	Min. 1 MΩ
	3	Hot short (Contact with GND circuit) in wiring harness	★ Prepare with starting switch OFF, then turn starting switch ON and carry out troubleshooting.		
			Wiring harness between CM02 (female) (8), (9) – EGC2 (female) (46), STC2 (female) (32), WEC2 (female) (32), ACCN (female) (17), SRV (male) (3) or CA1 (female) (A) and chassis ground	Voltage	Max. 1 V
			Wiring harness between CM02 (female) (10) – EGC2 (female) (47), STC2 (female) (22), WEC2 (female) (22), ACCN (female) (18), SRV (male) (10) or CA1 (female) (B) and chassis ground	Voltage	Max. 1 V
	4	Defective CAN terminal resistance (Internal disconnection or short circuit)	★ Prepare with starting switch OFF, then carry out troubleshooting without turning starting switch ON.		
			CA1 (male)	Resistance	
			Between (A) – (B)	Approx. 120 Ω	
	5	Defective machine monitor or controller	If causes 1 – 4 are not detected, machine monitor, engine controller, power train controller or work equipment controller may be defective. (Since trouble is in system, troubleshooting cannot be carried out.)		

Circuit diagram related to CAN communication

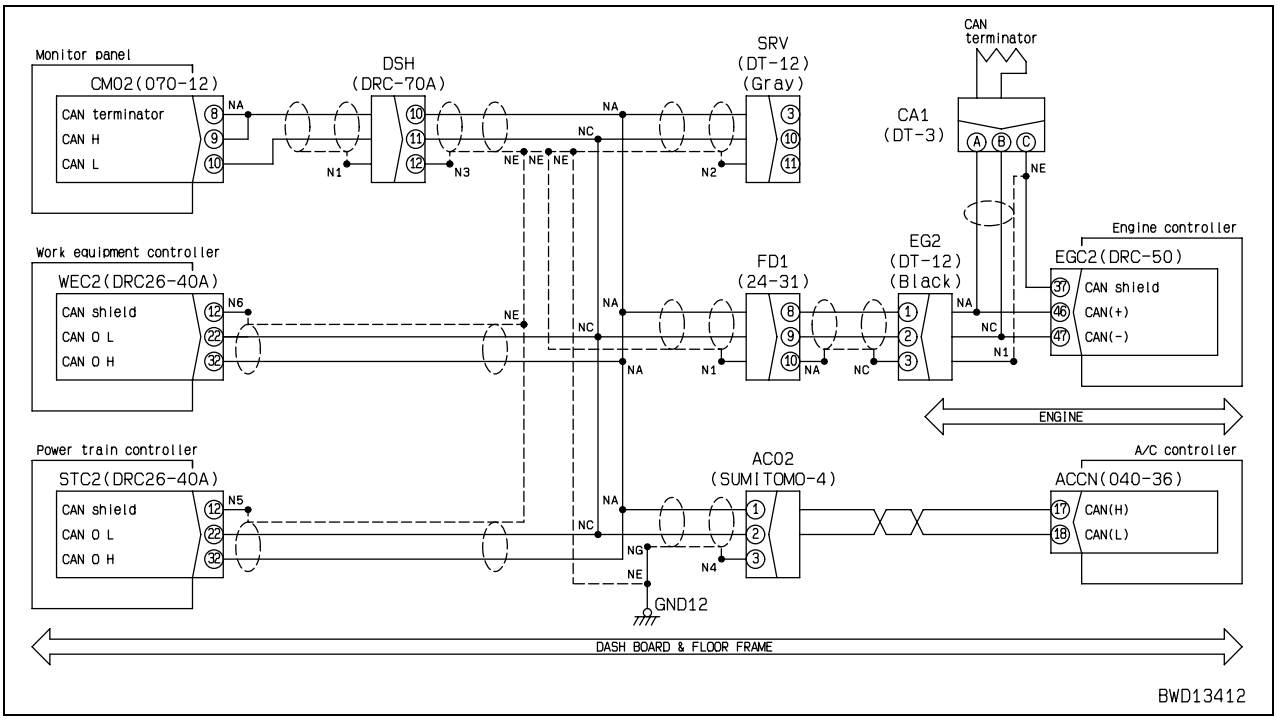

D155AX-6 Bulldozer

Form No. SEN00718-01

© 2006 KOMATSU
All Rights Reserved
Printed in Japan 05-06 (02)

BULLDOZER

D155AX-6

Machine model	Serial number
D155AX-6	80001 and up

40 Troubleshooting

Troubleshooting by failure and error codes, Part 4

Troubleshooting by failure and error codes, Part 4 3
Failure code [DB90KT] WE controller: Abnormality in controller 3
Failure code [DB95KK] WE controller: Source voltage reduction 4
Failure code [DB97KK] WE controller: Source voltage reduction 6
Failure code [DB99KQ] WE controller: Type select signal 8
Failure code [DB9RKR] WE controller: Can communication lost 10
Failure code [DBE0KK] PT controller: Source voltage reduction 12
Failure code [DBE0KT] PT controller: Abnormality in controller 14
Failure code [DBE6KK] PT controller: Source voltage reduction 16
Failure code [DBE7KK] PT controller: Source voltage reduction 18
Failure code [DBE9KQ] PT controller: Type select signal 20
Failure code [DD12KA] Shift up Sw: Disconnection 22
Failure code [DD12KB] Shift up Sw: Short circuit 24
Failure code [DD13KA] Shift down Sw: Disconnection 26

Failure code [DD13KB] Shift down Sw: Short circuit 28
Failure code [DD14KA] Parking lever Sw: Disconnection 30
Failure code [DD14KB] Parking lever Sw: Short circuit 32
Failure code [DDDDKA] Back up brake Sw: Disconnection 34
Failure code [DDDDKB] Back up brake Sw: Short circuit 36
Failure code [DDDDKX] Back up brake Sw: Signal mismatch 38
Failure code [DDN7KA] WEQ Knob Sw (down): Disconnection 40
Failure code [DDN7KB] WEQ Knob Sw (down): Short circuit 42
Failure code [DDN9KA] WEQ Knob Sw (up): Disconnection 44
Failure code [DDN9KB] WEQ Knob Sw (up): Short circuit 46
Failure code [DDNLKA] Weq lock Sw: Disconnection 48
Failure code [DDNLKB] Weq lock Sw: Short circuit 50
Failure code [DDTSL1] S/C: Fill high 52
Failure code [DDTSLH] S/C: Fill low 54

Troubleshooting by failure and error codes, Part 4

Failure code [DB90KT] WE controller: Abnormality in controller

Action code	Failure code	Trouble	WE controller: Abnormality in controller (Work equipment controller system)
E01	**DB90KT**		
Contents of trouble	• Information in ROM (non-volatile memory) of work equipment controller is abnormal.		
Action of controller	• Sets internal adjustment values to default values.		
Problem that appears on machine	• Operating feel of work equipment may become bad. • Adjusting function of machine monitor may not operate normally.		
Related information	• Method of reproducing failure code: Turn starting switch ON.		

	Cause		Standard value in normal state/Remarks on troubleshooting
Possible causes and standard value in normal state	1	Defective adjustment of work equipment controller	Turn Adjustment function in service mode ON and perform operation of reproducing trouble. If "E" of failure code disappears at this time, system is normal. • Adjustment code: **0031** (Initialization of work equipment controller)
	2	Defective work equipment controller	Troubleshooting cannot be carried out since defect is in work equipment controller. (If there is not any visible trouble in machine, controller may be used as it is.)

Failure code [DB95KK] WE controller: Source voltage reduction

Action code	Failure code	Trouble	WE controller: Source voltage reduction (Work equipment controller system)
E03	**DB95KK**		
Contents of trouble	• Voltage of 5V power supply circuit for work equipment controller sensors is below 4.5 V or above 5.5 V. • Abnormal current flowed in 5V power supply circuit for work equipment controller sensors.		
Action of controller	• Turns output of 5V power supply circuit OFF, if abnormal current flows. • Limits operation of engine and transmission.		
Problem that appears on machine	• System may not operate normally. • Once machine is stopped, engine speed is limited to medium (half). • Once machine is stopped, travel is limited to F1 and R1.		
Related information	• Method of reproducing failure code: Turn starting switch ON.		

	Cause		Standard value in normal state/Remarks on troubleshooting			
Possible causes and standard value in normal state	1	Defective work equipment pump oil pressure sensor (Internal trouble)	★ Prepare with starting switch OFF, then turn starting switch ON and carry out troubleshooting.			
			Disconnect devices at right in order. If "E" of failure code disappears when a device is disconnected, that device has trouble in it.	Work equipment pump oil pressure sensor	Connector HHP	
	2	Ground fault in wiring harness (Contact with GND circuit)	★ Prepare with starting switch OFF, then carry out troubleshooting without turning starting switch ON.			
			Wiring harness between WEC3 (female) (34) – HHP (female) (B) and chassis ground		Resistance	Min. 1 MΩ
	3	Hot short (Short circuit with 24V circuit) in wiring harness	★ Prepare with starting switch OFF, then turn starting switch ON and carry out troubleshooting.			
			Wiring harness between WEC3 (female) (34) – HHP (female) (B) and chassis ground		Voltage	Max. 1 V
	4	Defective work equipment controller	★ Prepare with starting switch OFF, then turn starting switch ON and carry out troubleshooting.			
			WEC1, WEC3		Voltage	
			Between WEC3 (34) – WEC1 (21)		4.5 – 5.5 V	

Circuit diagram related to work equipment controller 5V sensor power supply

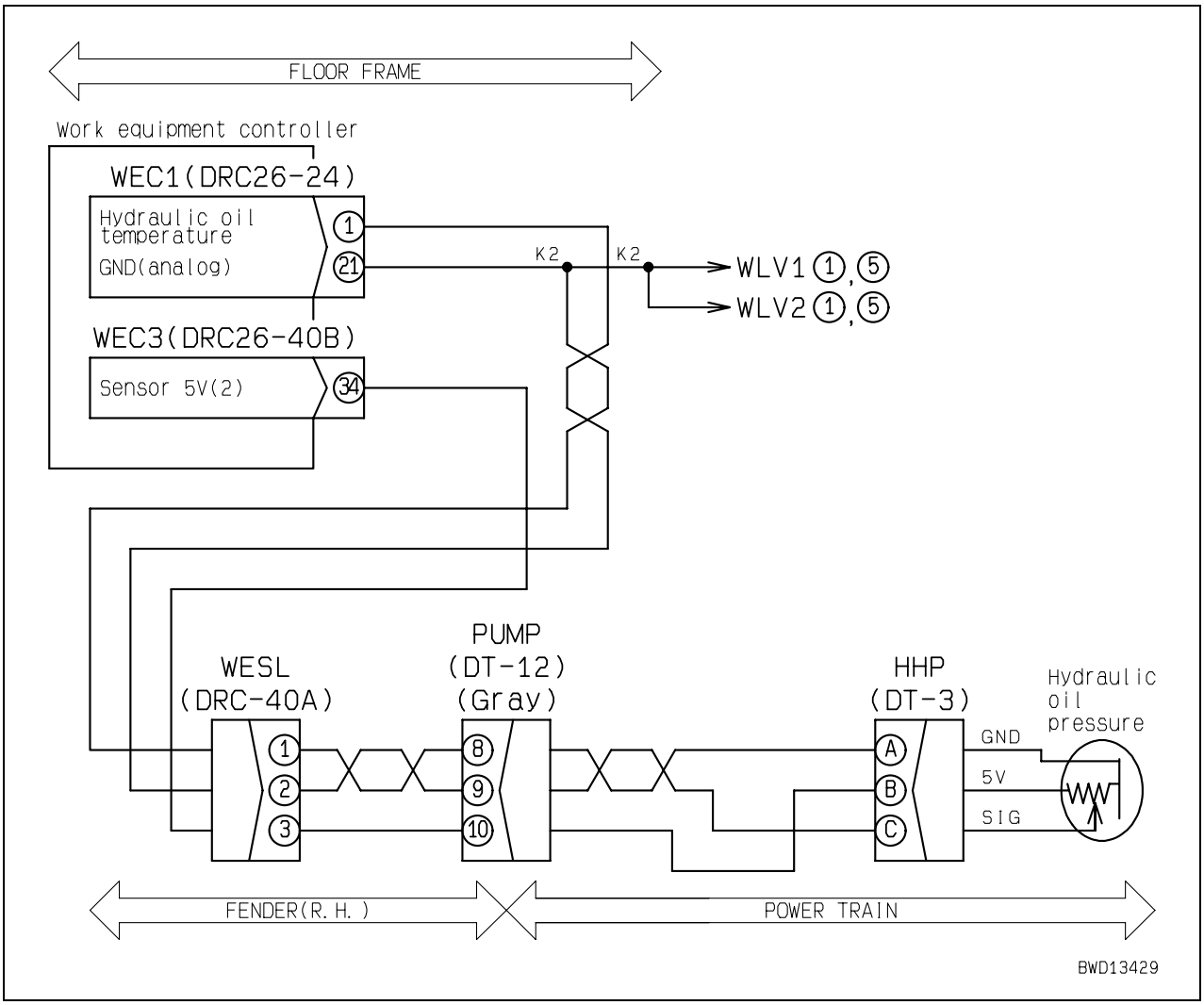

Failure code [DB97KK] WE controller: Source voltage reduction

Action code	Failure code	Trouble	WE controller: Source voltage reduction (Work equipment controller system)
E03	**DB97KK**		
Contents of trouble	• Voltage of 5V power supply circuit for work equipment controller sensors is below 4.5 V or above 5.5 V. • Abnormal current flowed in 5V power supply circuit for work equipment controller sensors.		
Action of controller	• Turns output of 5V power supply circuit OFF, if abnormal current flows. • Limits operation of engine and transmission.		
Problem that appears on machine	• System may not operate normally. • Once machine is stopped, engine speed is limited to medium (half). • Once machine is stopped, travel is limited to F1 and R1.		
Related information	• Method of reproducing failure code: Turn starting switch ON.		

	Cause		Standard value in normal state/Remarks on troubleshooting			
Possible causes and standard value in normal state	1	Defective blade control lever or ripper control lever (Internal trouble)	★ Prepare with starting switch OFF, then turn starting switch ON and carry out troubleshooting.			
			Disconnect devices at right in order.If "E" of failure code disappears when a device is disconnected, that device has trouble in it.	Blade control lever	Connector WLV1	
				Ripper control lever	Connector WLV2	
	2	Ground fault in wiring harness (Contact with GND circuit)	★ Prepare with starting switch OFF, then carry out troubleshooting without turning starting switch ON.			
			Wiring harness between WEC1 (female) (22) – WLV1 (female) (4), (8) and chassis ground [Blade control lever system]		Resistance	Min. 1 MΩ
			Wiring harness between WEC1 (female) (22) – WLV2 (female) (4), (8) and chassis ground [Ripper control lever system]		Resistance	Min. 1 MΩ
	3	Hot short (Short circuit with 24V circuit) in wiring harness	★ Prepare with starting switch OFF, then turn starting switch ON and carry out troubleshooting.			
			Wiring harness between WEC1 (female) (22) – WLV1 (female) (4), (8) and chassis ground [Blade control lever system]		Voltage	Max. 1 V
			Wiring harness between WEC1 (female) (22) – WLV2 (female) (4), (8) and chassis ground [Ripper control lever system]		Voltage	Max. 1 V
	4	Defective work equipment controller	★ Prepare with starting switch OFF, then turn starting switch ON and carry out troubleshooting.			
			WEC1		Voltage	
			Between WEC1(22) – (21)		4.5 – 5.5 V	

Circuit diagram related to work equipment controller 5V sensor power supply

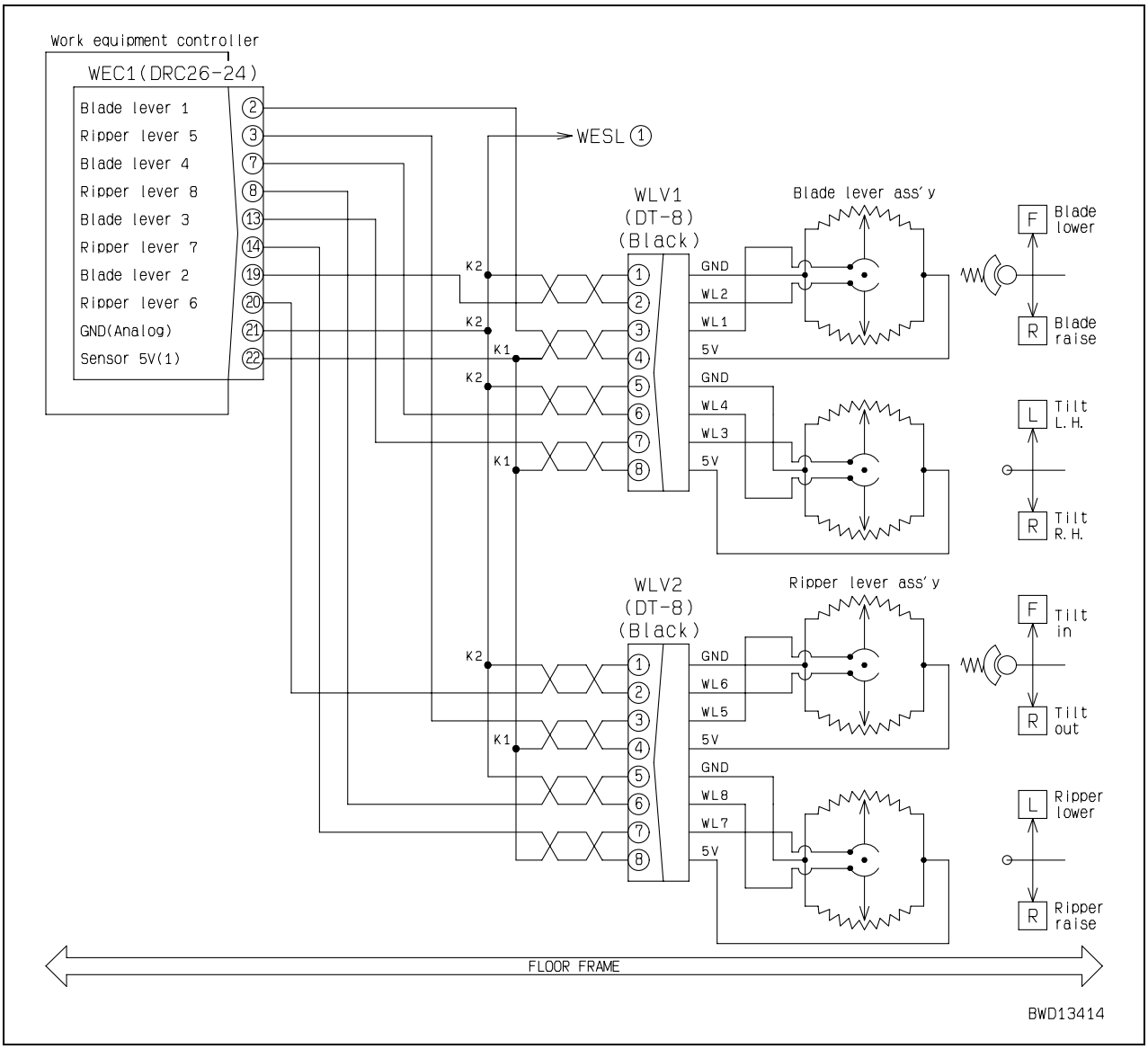

Failure code [DB99KQ] WE controller: Type select signal

Action code	Failure code	Trouble	WE controller: Type select signal (Work equipment controller system)
E04	**DB99KQ**		
Contents of trouble	• Specification setting in work equipment controller does not match to specification setting signal (Work equipment controller cannot be recognized).		
Action of controller	• Turns all outputs of work equipment controller OFF. • Limits operation of engine and transmission.		
Problem that appears on machine	• Machine does not move at all. • Once machine is stopped, engine speed is limited to medium (half). • Once machine is stopped, it cannot travel at all.		
Related information	• Method of reproducing failure code: Turn starting switch ON.		

	Cause		Standard value in normal state/Remarks on troubleshooting		
Possible causes and standard value in normal state	1	Defective adjustment of work equipment controller	Turn Adjustment function in service mode ON and perform operation of reproducing trouble. If "E" of failure code disappears at this time, system is normal. • Adjustment code: **0031** (Initialization of work equipment controller)		
	2	Disconnection in wiring harness (Disconnection in wiring or defective contact in connector)	★ Prepare with starting switch OFF, then carry out troubleshooting without turning starting switch ON.		
			Wiring harness between WEC3 (female) (30) – chassis ground (GND11)	Resistance	Max. 1 Ω
	3	Defective work equipment controller	★ Prepare with starting switch OFF, then turn starting switch ON and carry out troubleshooting.		
			WEC3	Voltage	
			Wiring harness between (30) – chassis ground	Max. 1 V	

Circuit diagram related to work equipment controller type select power supply

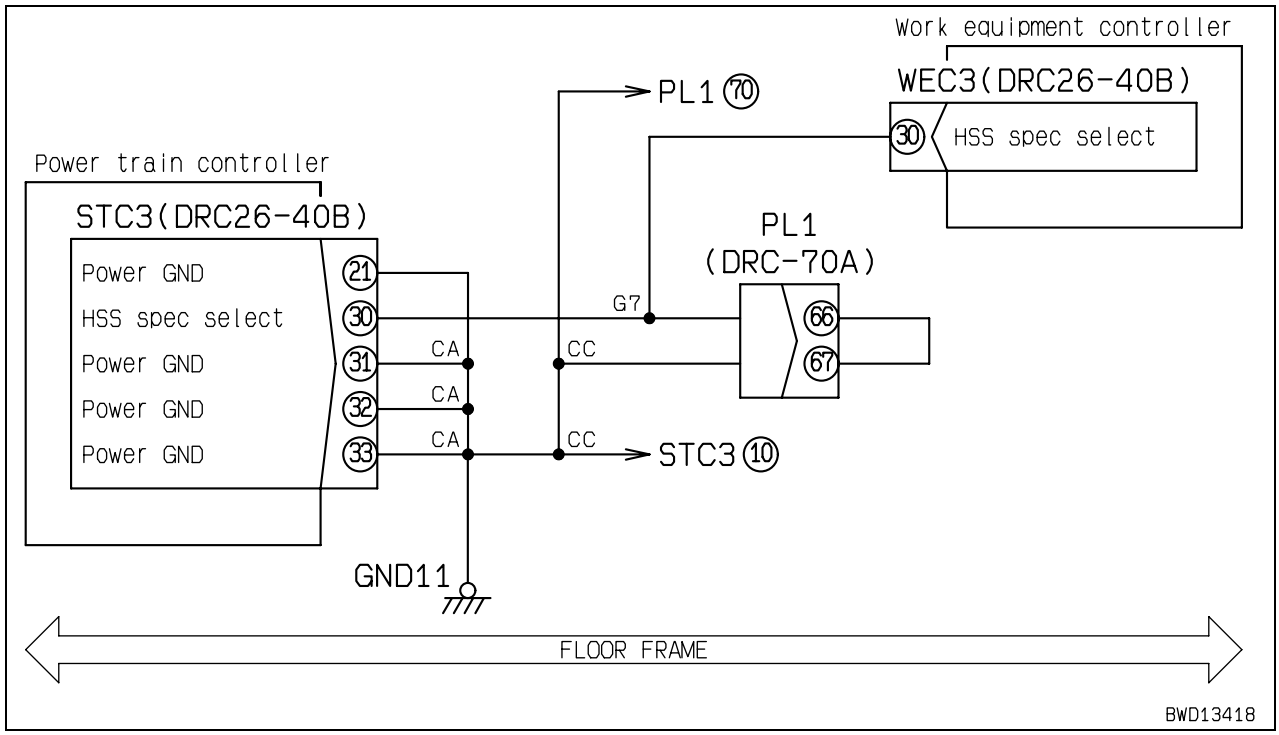

Failure code [DB9RKR] WE controller: Can communication lost

Action code	Failure code	Trouble	WE controller: Can communication lost (Work equipment controller system)
E03	**DB9RKR**		
Contents of trouble	• Work equipment controller cannot recognize machine monitor, engine controller or power train controller in CAN communication circuit.		
Action of controller	• Limits operation of engine and transmission.		
Problem that appears on machine	• System may not operate normally. • Once machine is stopped, engine speed is limited to medium (half). • Once machine is stopped, travel is limited to F1 and R1.		
Related information	• Method of reproducing failure code: Turn starting switch ON.		

	Cause		Standard value in normal state/Remarks on troubleshooting		
Possible causes and standard value in normal state	1	Disconnection in wiring harness (Disconnection in wiring or defective contact in connector)	★ Prepare with starting switch OFF, then carry out troubleshooting without turning starting switch ON.		
			Wiring harness between CM02 (female) (8), (9) – EGC2 (female) (46), STC2 (female) (32) or WEC2 (female) (32)	Resistance	Max. 1 Ω
			Wiring harness between CM02 (female) (10) – EGC2 (female) (47), STC2 (female) (22) or WEC2 (female) (22)	Resistance	Max. 1 Ω
	2	Ground fault in wiring harness (Contact with GND circuit)	★ Prepare with starting switch OFF, then carry out troubleshooting without turning starting switch ON.		
			Wiring harness between CM02 (female) (8), (9) – EGC2 (female) (46), STC2 (female) (32), WEC2 (female) (32), ACCN (female) (17), SRV(male) (3) or CA1 (female) (A) and chassis ground	Resistance	Min. 1 MΩ
			Wiring harness between CM02 (female) (10) – EGC2 (female) (47), STC2 (female) (22), WEC2 (female) (22), ACCN (female) (18), SRV (male) (10) or CA1 (female) (B) and chassis ground	Resistance	Min. 1 MΩ
	3	Hot short (Contact with GND circuit) in wiring harness	★ Prepare with starting switch OFF, then turn starting switch ON and carry out troubleshooting.		
			Wiring harness between CM02 (female) (8), (9) – EGC2 (female) (46), STC2 (female) (32), WEC2 (female) (32), ACCN (female) (17), SRV (male) (3) or CA1 (female) (A) and chassis ground	Voltage	Max. 1 V
			Wiring harness between CM02 (female) (10) – EGC2 (female) (47), STC2 (female) (22), WEC2 (female) (22), ACCN (female) (18), SRV (male) (10) or CA1 (female) (B) and chassis ground	Voltage	Max. 1 V
	4	Defective CAN terminal resistance (Internal disconnection or short circuit)	★ Prepare with starting switch OFF, then carry out troubleshooting without turning starting switch ON.		
			CA1 (male)	Resistance	
			Between (A) – (B)	Approx. 120 Ω	
	5	Defective machine monitor or controller	If causes 1 – 4 are not detected, machine monitor, engine controller, power train controller or work equipment controller may be defective. (Since trouble is in system, troubleshooting cannot be carried out.)		

Circuit diagram related to CAN communication

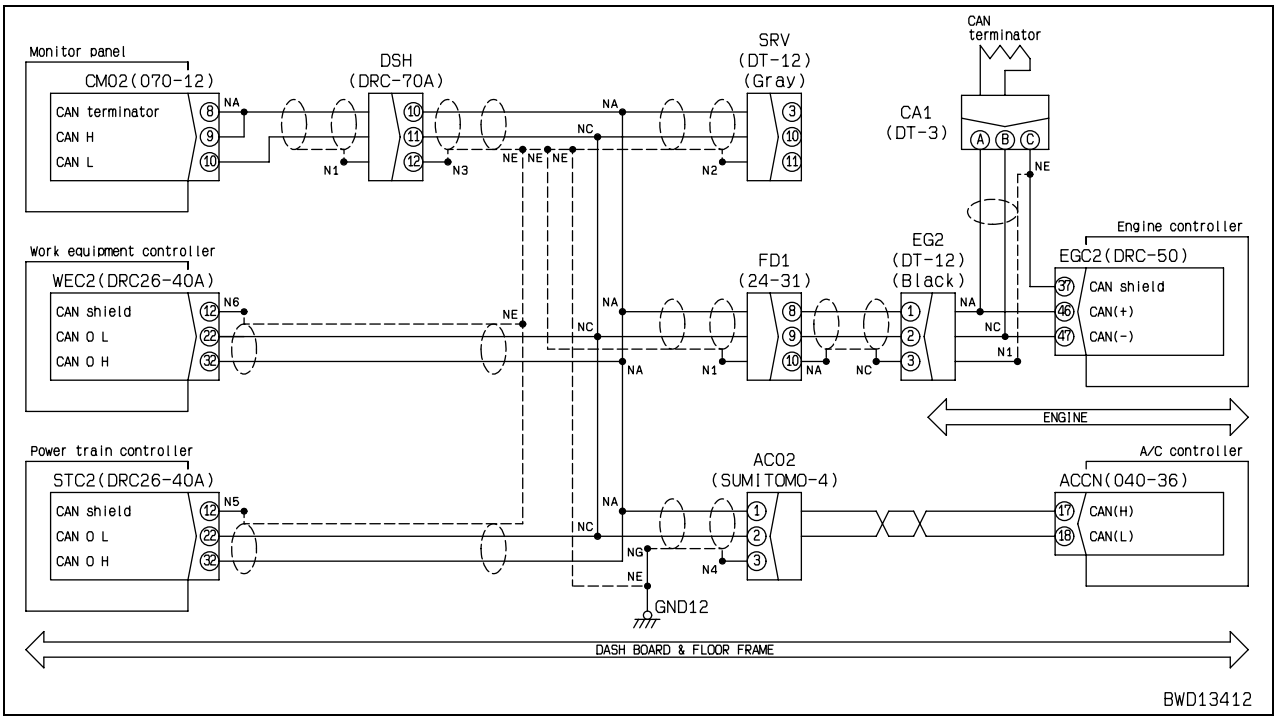

Failure code [DBE0KK] PT controller: Source voltage reduction

Action code	Failure code	Trouble	PT controller: Source voltage reduction (Power train controller system)
E03	**DBE0KK**		
Contents of trouble	• Source voltage of work equipment controller is below 17 V.		
Action of controller	• Limits operation of engine and transmission.		
Problem that appears on machine	• Machine monitor may not display normally. • Relays and solenoids may not be driven and system may not operate normally. • Once machine is stopped, engine speed is limited to medium (half). • Once machine is stopped, it cannot travel at all.		
Related information	• Source voltage of power train controller can be checked with adjusting function. (Code: 2121) • Method of reproducing failure code: Turn starting switch ON.		

	Cause		Standard value in normal state/Remarks on troubleshooting		
Possible causes and standard value in normal state	1	Defective circuit breaker (CB1, CB7, CB30 or CB105)	If circuit breaker is turned OFF, circuit probably has ground fault (See cause 3).		
	2	Disconnection in wiring harness (Disconnection in wiring or defective contact in connector)	★ Prepare with starting switch OFF, then carry out troubleshooting without turning starting switch ON.		
			Wiring harness between STC3 (female) (1), (11) – CB7 (2)	Resistance	Max. 1 Ω
			Wiring harness between CB7 (1) – CB30 (B30S)	Resistance	Max. 1 Ω
			Wiring harness between CB30 (B30L) – terminal BRB	Resistance	Max. 1 Ω
			Wiring harness between STC3 (female) (2), (12), (22) – CB1 (2)	Resistance	Max. 1 Ω
			Wiring harness between CB1 (1) – CB105 (B105S)	Resistance	Max. 1 Ω
			Wiring harness between CB105 (B105L) – terminal BRC	Resistance	Max. 1 Ω
			Wiring harness between STC3 (female) (21), (31), (32), (33) – chassis ground (GND11)	Resistance	Max. 1 Ω
	3	Ground fault in wiring harness (Contact with GND circuit)	★ Prepare with starting switch OFF, then carry out troubleshooting without turning starting switch ON.		
			Wiring harness between STC3 (female) (1), (11) – CB7 (2) or circuit branch end and chassis ground	Resistance	Min. 1 MΩ
			Wiring harness between CB7 (1) – CB30 (B30S) or circuit branch end and chassis ground	Resistance	Min. 1 MΩ
			Wiring harness between CB30 (B30L) – terminal BRB and chassis ground	Resistance	Min. 1 MΩ
			Wiring harness between STC3 (female) (2), (12), (22) – CB1 (2) or PL1 (female) (68) and chassis ground	Resistance	Min. 1 MΩ
			Wiring harness between CB1 (1) – CB105 (B105S) or circuit branch end and chassis ground	Resistance	Min. 1 MΩ
			Wiring harness between CB105 (B105L) – terminal BRC and chassis ground	Resistance	Min. 1 MΩ

Possible causes and standard value in normal state	Cause		Standard value in normal state/Remarks on troubleshooting		
	4	Defective power train controller	★ Prepare with starting switch OFF, then turn starting switch ON and carry out troubleshooting.		
			STC3	Starting switch	Voltage
			Between (1), (11) – (21), (31), (32), (33)	OFF	20 – 30 V
			Between (2), (12), (22) – (21), (31), (32), (33)	ON	20 – 30 V

Circuit diagram related to power train controller power supply

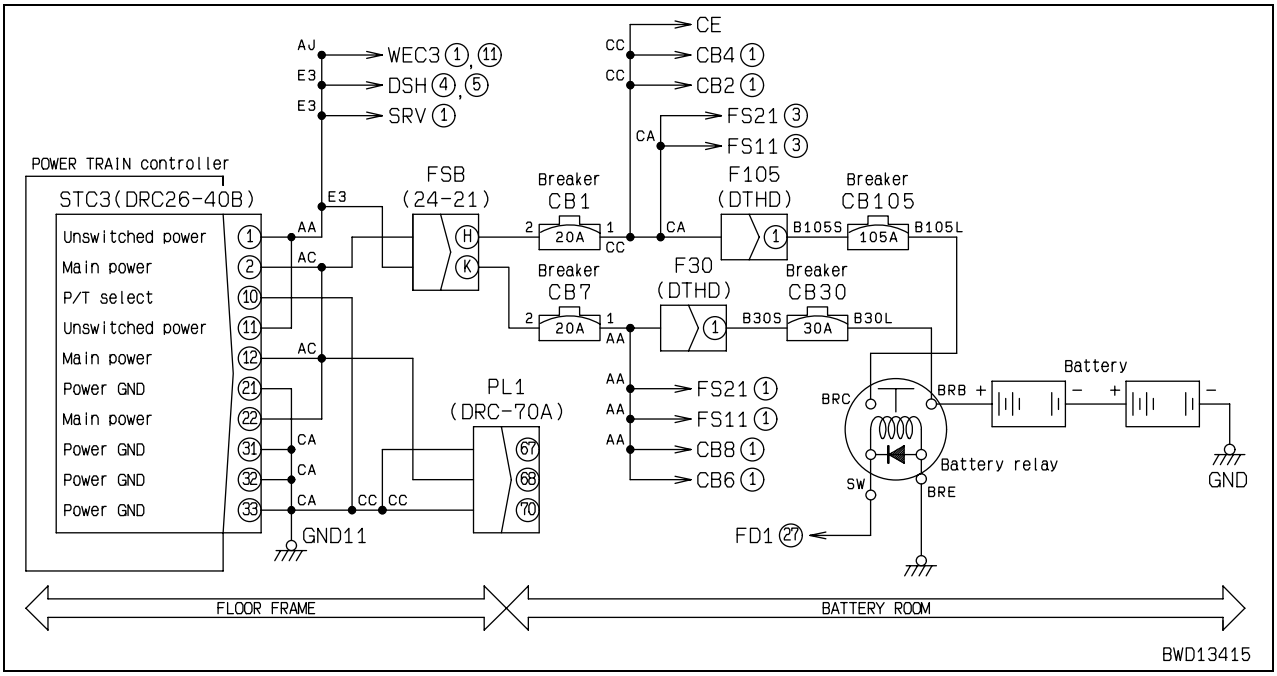

Failure code [DBE0KT] PT controller: Abnormality in controller

Action code	Failure code	Trouble	PT controller: Abnormality in controller (Power train controller system)
E01	**DBE0KT**		
Contents of trouble	• Information in ROM (non-volatile memory) of power train controller is abnormal.		
Action of controller	• Sets internal adjustment values to default values.		
Problem that appears on machine	• Shifting feel of transmission may become bad. • Adjusting function may not operate normally.		
Related information	• Method of reproducing failure code: Turn starting switch ON.		

	Cause		Standard value in normal state/Remarks on troubleshooting
Possible causes and standard value in normal state	1	Defective adjustment of power train controller	Turn Adjustment function in service mode ON and perform operation of reproducing trouble. If "E" of failure code disappears at this time, system is normal. • Adjustment code: **0002** (Initialization of power train controller)
	2	Defective power train controller	Troubleshooting cannot be carried out since defect is in power train controller. (If there is not any visible trouble in machine, controller may be used as it is.)

Failure code [DBE6KK] PT controller: Source voltage reduction

Action code	Failure code	Trouble	PT controller: Source voltage reduction (Power train controller system)
E02	**DBE6KK**		
Contents of trouble	• Voltage of 24V power supply circuit for power train controller sensors is below 17 V or above 30 V. • Abnormal current flowed in 24V power supply circuit for power train controller sensors.		
Action of controller	• Turns output of 24V power supply circuit OFF, if abnormal current flows. • Limits operation of engine and transmission.		
Problem that appears on machine	• System may not operate normally. • Once machine is stopped, engine speed is limited to medium (half). • Once machine is stopped, travel is limited to F1 and R1.		
Related information	• Method of reproducing failure code: Turn starting switch ON.		

	Cause		Standard value in normal state/Remarks on troubleshooting			
Possible causes and standard value in normal state	1	Defective pitch angle sensor or torque converter pressure sensor (Internal trouble)	★ Prepare with starting switch OFF, then carry out troubleshooting without turning starting switch ON.			
			Disconnect devices at right in order. If "E" of failure code disappears when a device is disconnected, that device has trouble in it.	Pitch angle sensor	Connector PT1	
				Torque converter inlet pressure sensor	Connector TIP	
				Torque converter outlet pressure sensor	Connector TOP	
	2	Ground fault in wiring harness (Contact with GND circuit)	★ Prepare with starting switch OFF, then carry out troubleshooting without turning starting switch ON.			
			Wiring harness between STC1 (female) (16) – PT1 (female) (C) [Pitch angle sensor system]		Resistance	Min. 1 MΩ
			Wiring harness between STC1 (female) (16) – PIT (female) (B) [Torque converter inlet pressure sensor system]		Resistance	Min. 1 MΩ
			Wiring harness between STC1 (female) (16) – TOP (female) (B) [Torque converter outlet pressure sensor system]		Resistance	Min. 1 MΩ
	3	Defective power train controller	★ Prepare with starting switch OFF, then turn starting switch ON and carry out troubleshooting.			
			STC1	Voltage		
			Between (16) – (21)	20 – 30 V		

Circuit diagram related to power train controller 24V sensor power supply

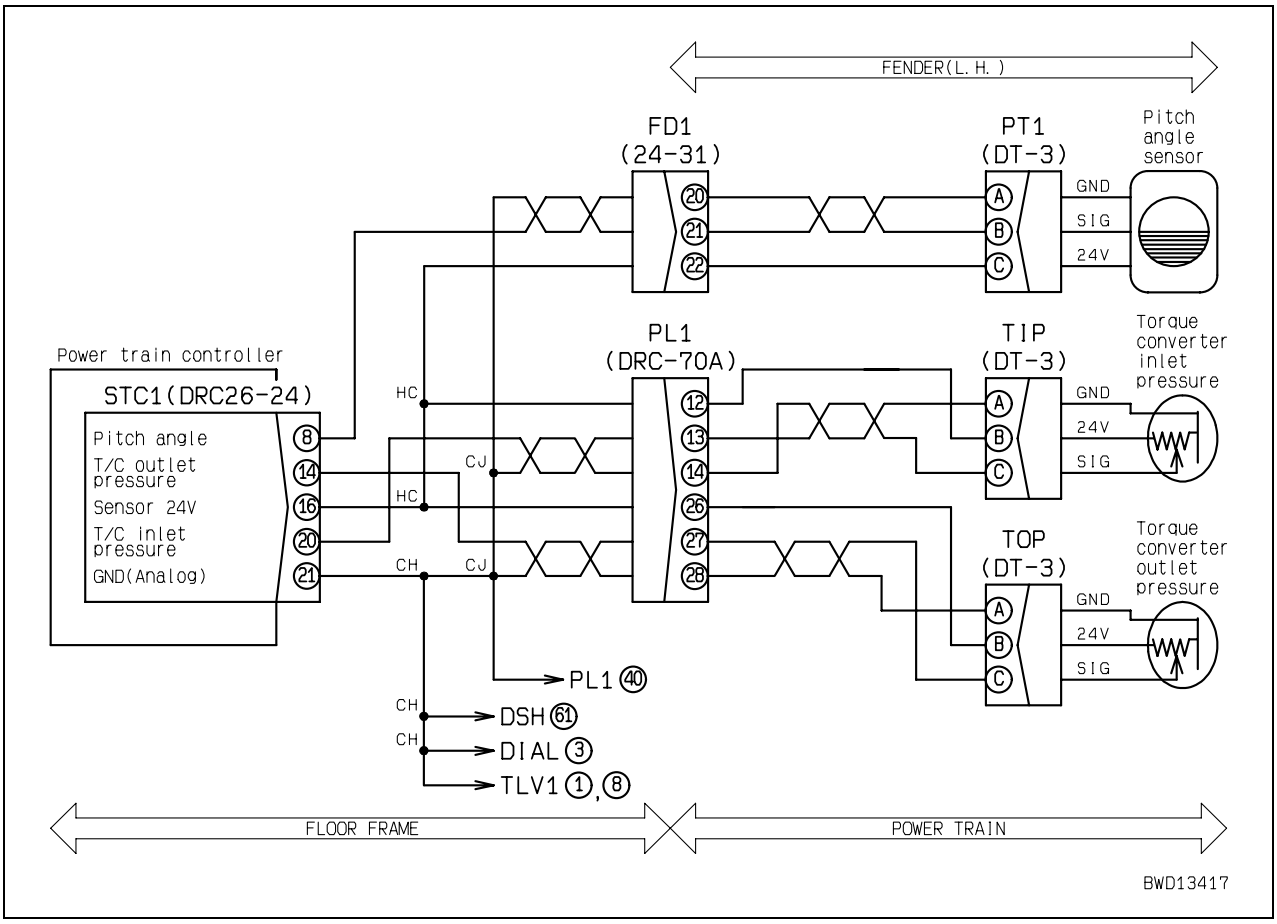

Failure code [DBE7KK] PT controller: Source voltage reduction

Action code	Failure code	Trouble	PT controller: Source voltage reduction (Power train controller system)
E02	**DBE7KK**		
Contents of trouble	• Voltage of 5V power supply circuit for power train controller sensors is below 4.5 V or above 5.5 V. • Abnormal current flowed in 5V power supply circuit for power train controller sensors.		
Action of controller	• Turns output of 5V power supply circuit OFF, if abnormal current flows. • Limits operation of engine and transmission.		
Problem that appears on machine	• System may not operate normally. • Once machine is stopped, engine speed is limited to medium (half). • Once machine is stopped, travel is limited to F1 and R1.		
Related information	• Method of reproducing failure code: Turn starting switch ON.		

	Cause		Standard value in normal state/Remarks on troubleshooting			
Possible causes and standard value in normal state	1	Defective brake pedal potentiometer, fuel control dial or PCCS lever (Internal trouble)	★ Prepare with starting switch OFF, then carry out troubleshooting without turning starting switch ON.			
			Disconnect devices at right in order. If "E" of failure code disappears when a device is disconnected, that device has trouble in it.	Brake pedal potentiometer	Connector BRK	
				Fuel control dial	Connector DIAL	
				PCCS lever	Connector TLV1	
	2	Ground fault in wiring harness (Contact with GND circuit)	★ Prepare with starting switch OFF, then carry out troubleshooting without turning starting switch ON.			
			Wiring harness between STC1 (female) (22) – BRK (female) (C) and chassis ground [Brake pedal potentiometer system]		Resistance	Min. 1 MΩ
			Wiring harness between STC1 (female) (22) – DIAL (female) (1) and chassis ground [Fuel control dial system]		Resistance	Min. 1 MΩ
			Wiring harness between STC1 (female) (22) – TLV1 (female) (4), (5) and chassis ground [PCCS lever system]		Resistance	Min. 1 MΩ
	3	Hot short (Short circuit with 24V circuit) in wiring harness	★ Prepare with starting switch OFF, then turn starting switch ON and carry out troubleshooting.			
			Wiring harness between STC1 (female) (22) – BRK (female) (C) and chassis ground [Brake pedal potentiometer system]		Voltage	Max. 1 V
			Wiring harness between STC1 (female) (22) – DIAL (female) (1) and chassis ground [Fuel control dial system]		Voltage	Max. 1 V
			Wiring harness between STC1 (female) (22) – TLV1 (female) (4), (5) and chassis ground [PCCS lever system]		Voltage	Max. 1 V
	4	Defective power train controller	★ Prepare with starting switch OFF, then turn starting switch ON and carry out troubleshooting.			
			STC1		Voltage	
			Between (22) – (21)		4.5 – 5.5 V	

Circuit diagram related to power train controller 5V sensor power supply

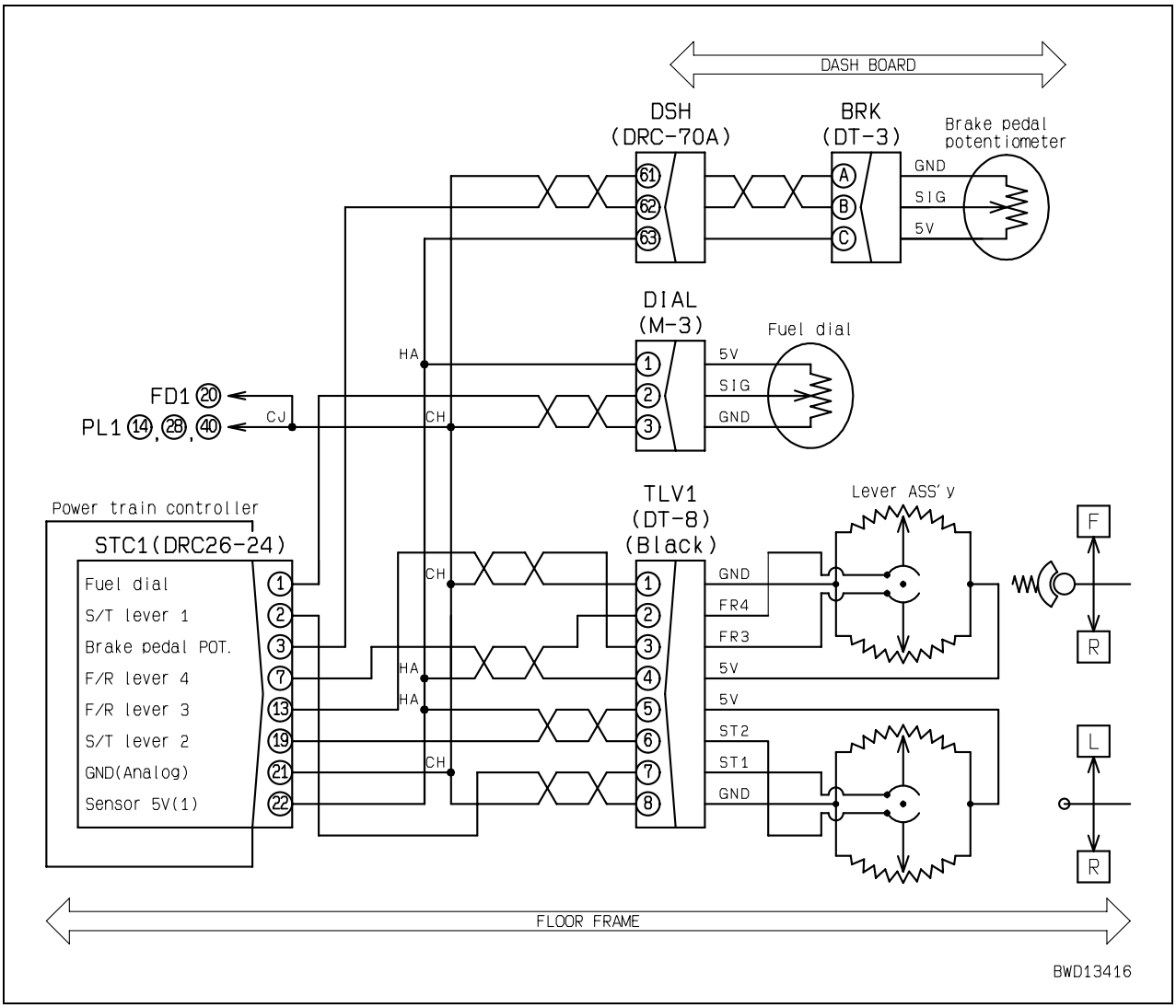

Failure code [DBE9KQ] PT controller: Type select signal

Action code	Failure code	Trouble	PT controller: Type select signal (Power train controller system)
E04	**DBE9KQ**		
Contents of trouble	• Specification setting in power train controller does not match to specification setting signal (Power train controller cannot be recognized).		
Action of controller	• Turns all outputs of power train controller OFF. • Limits operation of engine and transmission.		
Problem that appears on machine	• Machine does not move at all. • Once machine is stopped, engine speed is limited to medium (half). • Once machine is stopped, it cannot travel at all.		
Related information	• Method of reproducing failure code: Turn starting switch ON.		

	Cause		Standard value in normal state/Remarks on troubleshooting		
Possible causes and standard value in normal state	1	Defective adjustment of power train controller	Turn Adjustment function in service mode ON and perform operation of reproducing trouble. If "E" of failure code disappears at this time, system is normal. • Adjustment code: **0002** (Initialization of power train controller)		
	2	Disconnection in wiring harness (Disconnection in wiring or defective contact in connector)	★ Prepare with starting switch OFF, then carry out troubleshooting without turning starting switch ON.		
			Wiring harness between STC3 (female) (30) – chassis ground (GND11)	Resistance	Max. 1 Ω
	3	Defective power train controller	★ Prepare with starting switch OFF, then turn starting switch ON and carry out troubleshooting.		
			STC3	Voltage	
			Wiring harness between (30) – chassis ground	Max. 1 V	

Circuit diagram related to work equipment controller type select power supply

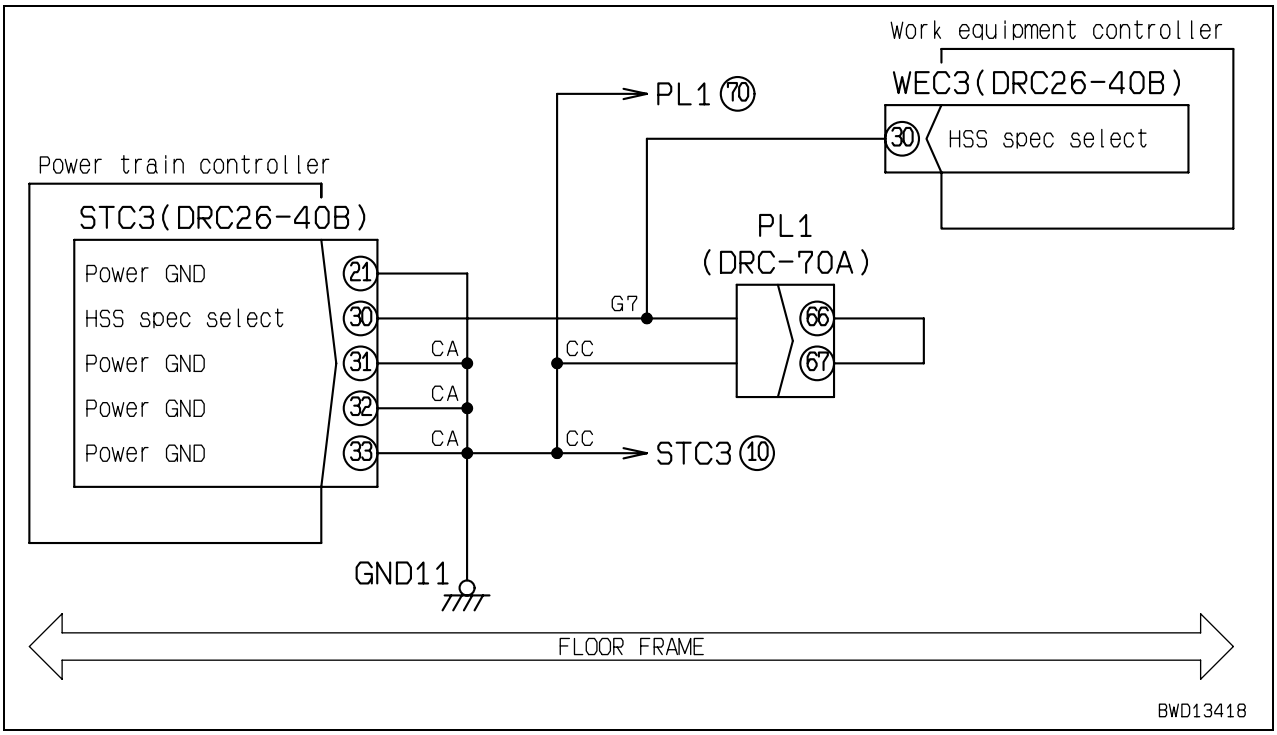

Failure code [DD12KA] Shift up Sw: Disconnection

Action code	Failure code	Trouble	Shift up Sw: Disconnection (Power train controller system)
E02	**DD12KA**		
Contents of trouble	• Signals of 2 systems of shift-up switch circuit are turned OFF (opened) simultaneously.		
Action of controller	• Recognizes that shift-up switch is not pressed.		
Problem that appears on machine	• Transmission gear cannot be shifted up. • Auto shift-down function does not operate.		
Related information	• "NO" signal of 2 systems of switch is for sensing operation and "NC" signal is for detecting error. • State of shift-up switch signal can be checked with monitoring function. (Code: 40905 T/M Sw Input 1) • Method of reproducing failure code: Turn starting switch ON + Operate shift-up switch.		

	Cause		Standard value in normal state/Remarks on troubleshooting			
Possible causes and standard value in normal state	1	Defective shift-up switch (Internal disconnection)	★ Prepare with starting switch OFF, then carry out troubleshooting without turning starting switch ON.			
			SFTU (male)	Shift-up switch		
				OFF (Released)	ON (Pressed)	
			Resistance between (3) – (2)	Max. 1 Ω	Min. 1 MΩ	
			Resistance between (1) – (2)	Min. 1 MΩ	Max. 1 Ω	
	2	Disconnection in wiring harness (Disconnection in wiring or defective contact in connector)	★ Prepare with starting switch OFF, then carry out troubleshooting without turning starting switch ON.			
			Wiring harness between STC3 (female) (9) – SFTU (female) (1)	Resistance	Max. 1 Ω	
			Wiring harness between STC1 (female) (4) – SFTU (female) (2)	Resistance	Max. 1 Ω	
			Wiring harness between STC1 (female) (12) – SFTU (female) (3)	Resistance	Max. 1 Ω	
	3	Hot short (Short circuit with 24V circuit) in wiring harness	★ Prepare with starting switch OFF, then turn starting switch ON and carry out troubleshooting.			
			Wiring harness between STC3 (female) (9) – SFTU (female) (1) and chassis ground	Voltage	Max. 1 V	
			Wiring harness between STC1 (female) (12) – SFTU (female) (3) and chassis ground	Voltage	Max. 1 V	
	4	Defective power train controller	★ Prepare with starting switch OFF, then turn starting switch ON and carry out troubleshooting.			
			STC1 ,STC3	Shift-up switch		
				OFF (Released)	ON (Pressed)	
			Voltage between STC1 (12) – STC1 (4)	Max. 1 V	5 – 11 V	
			Voltage between STC3 (9) – STC1 (4)	5 – 11 V	Max. 1 V	

Circuit diagram related to shift-up switch & shift-down switch

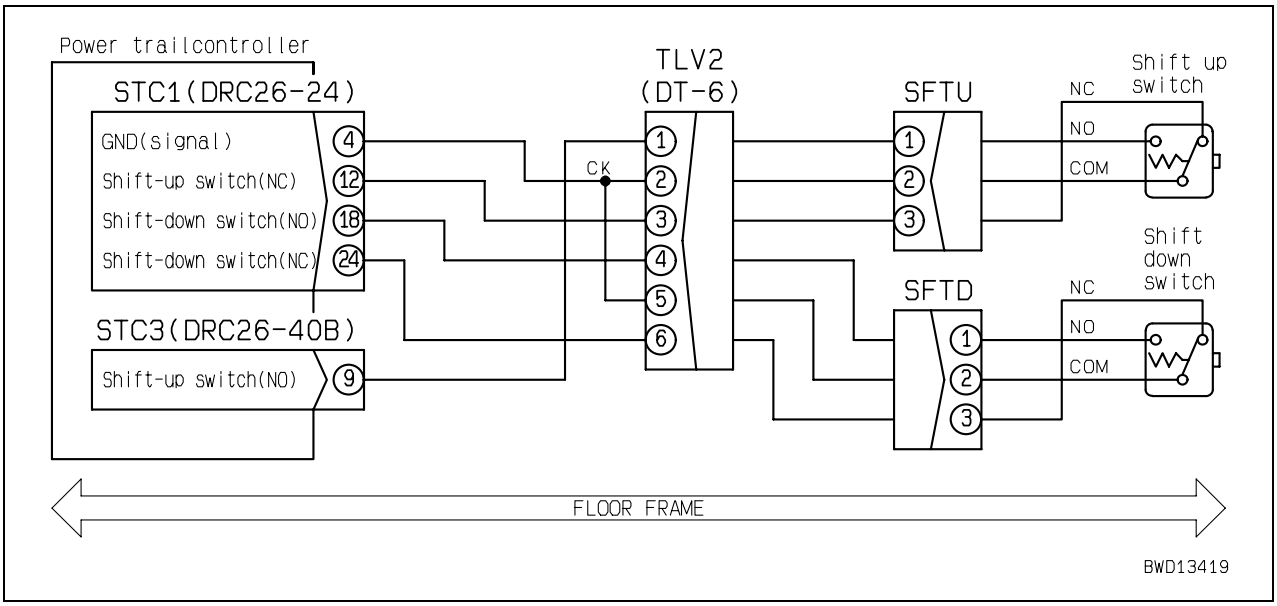

Failure code [DD12KB] Shift up Sw: Short circuit

Action code	Failure code	Trouble	Shift up Sw: Short circuit (Power train controller system)
E02	**DD12KB**		
Contents of trouble	• Signals of 2 systems of shift-up switch circuit are turned ON (closed) simultaneously.		
Action of controller	• Recognizes that shift-up switch is not pressed.		
Problem that appears on machine	• Transmission gear cannot be shifted up. • Auto shift-down function does not operate.		
Related information	• "NO" signal of 2 systems of switch is for sensing operation and "NC" signal is for detecting error. • State of shift-up switch signal can be checked with monitoring function. (Code: 40905 T/M Sw Input 1) • Method of reproducing failure code: Turn starting switch ON + Operate shift-up switch.		

	Cause		Standard value in normal state/Remarks on troubleshooting			
Possible causes and standard value in normal state	1	Defective shift-up switch (Internal short circuit)	★ Prepare with starting switch OFF, then carry out troubleshooting without turning starting switch ON.			
			SFTU (male)	Shift-up switch		
				OFF (Released)	ON (Pressed)	
			Resistance between (3) – (2)	Max. 1 Ω	Min. 1 MΩ	
			Resistance between (1) – (2)	Min. 1 MΩ	Max. 1 Ω	
	2	Ground fault in wiring harness (Contact with GND circuit)	★ Prepare with starting switch OFF, then carry out troubleshooting without turning starting switch ON.			
			Wiring harness between STC3 (female) (9) – SFTU (female) (1) and chassis ground	Resistance	Min. 1 MΩ	
			Wiring harness between STC1 (female) (12) – SFTU (female) (3) and chassis ground	Resistance	Min. 1 MΩ	
	3	Defective power train controller	★ Prepare with starting switch OFF, then turn starting switch ON and carry out troubleshooting.			
			STC1 ,STC3	Shift-up switch		
				OFF (Released)	ON (Pressed)	
			Voltage between STC1 (12) – STC1 (4)	Max. 1 V	5 – 11 V	
			Voltage between STC3 (9) – STC1 (4)	5 – 11 V	Max. 1 V	

Circuit diagram related to shift-up switch & shift-down switch

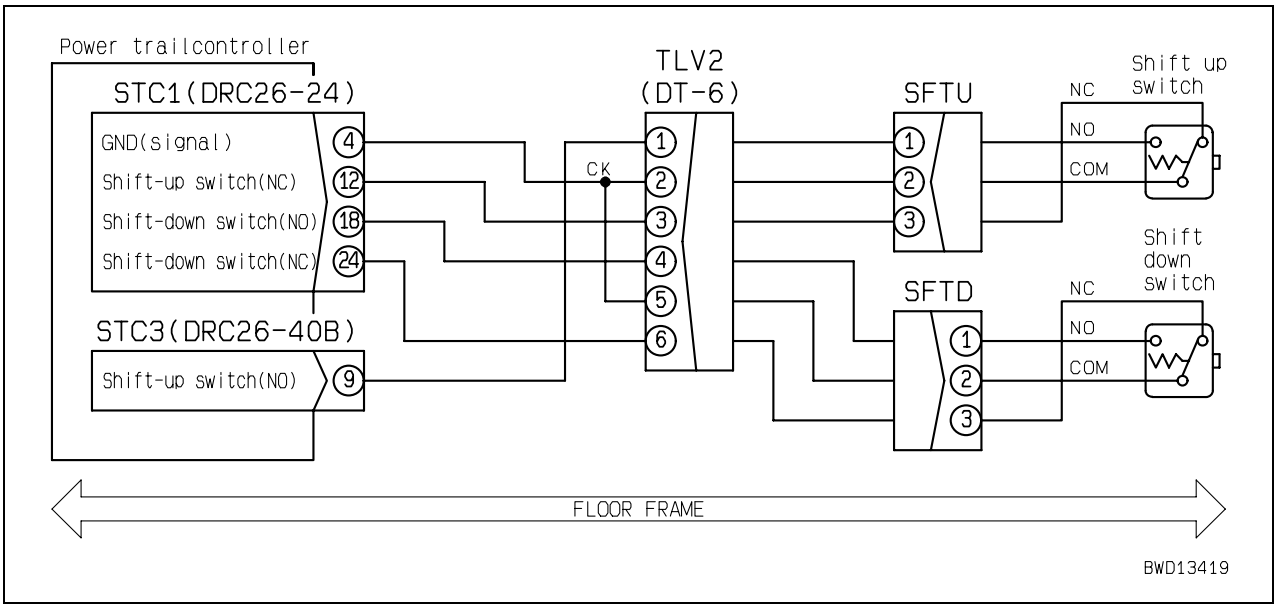

Failure code [DD13KA] Shift down Sw: Disconnection

Action code	Failure code	Trouble	Shift down Sw: Disconnection (Power train controller system)
E02	**DD13KA**		
Contents of trouble	• Signals of 2 systems of shift-down switch circuit are turned OFF (opened) simultaneously.		
Action of controller	• Recognizes that shift-down switch is not pressed.		
Problem that appears on machine	• Transmission gear cannot be shifted down. • Auto shift-down function does not operate.		
Related information	• "NO" signal of 2 systems of switch is for sensing operation and "NC" signal is for detecting error. • State of shift-down switch signal can be checked with monitoring function. (Code: 40905 T/M Sw Input 1) • Method of reproducing failure code: Turn starting switch ON + Operate shift-down switch.		

	Cause		Standard value in normal state/Remarks on troubleshooting			
Possible causes and standard value in normal state	1	Defective shift-down switch (Internal disconnection)	★ Prepare with starting switch OFF, then carry out troubleshooting without turning starting switch ON.			
			SFTD (female)	Shift-down switch		
				OFF (Released)	ON (Pressed)	
			Resistance between (3) – (2)	Max. 1 Ω	Min. 1 MΩ	
			Resistance between (1) – (2)	Min. 1 MΩ	Max. 1 Ω	
	2	Disconnection in wiring harness (Disconnection in wiring or defective contact in connector)	★ Prepare with starting switch OFF, then carry out troubleshooting without turning starting switch ON.			
			Wiring harness between STC1 (female) (18) – SFTD (female) (1)	Resistance	Max. 1 Ω	
			Wiring harness between STC1 (female) (4) – SFTD (female) (2)	Resistance	Max. 1 Ω	
			Wiring harness between STC1 (female) (24) – SFTD (female) (3)	Resistance	Max. 1 Ω	
	3	Hot short (Short circuit with 24V circuit) in wiring harness	★ Prepare with starting switch OFF, then turn starting switch ON and carry out troubleshooting.			
			Wiring harness between STC1 (female) (18) – SFTD (female) (1) and chassis ground	Voltage	Max. 1 V	
			Wiring harness between STC1 (female) (24) – SFTD (female) (3) and chassis ground	Voltage	Max. 1 V	
	4	Defective power train controller	★ Prepare with starting switch OFF, then turn starting switch ON and carry out troubleshooting.			
			STC1	Shift-down switch		
				OFF (Released)	ON (Pressed)	
			Voltage between (24) –- (4)	Max. 1 V	5 – 11 V	
			Voltage between (18) – (4)	5 – 11 V	Max. 1 V	

Circuit diagram related to shift-up switch & shift-down switch

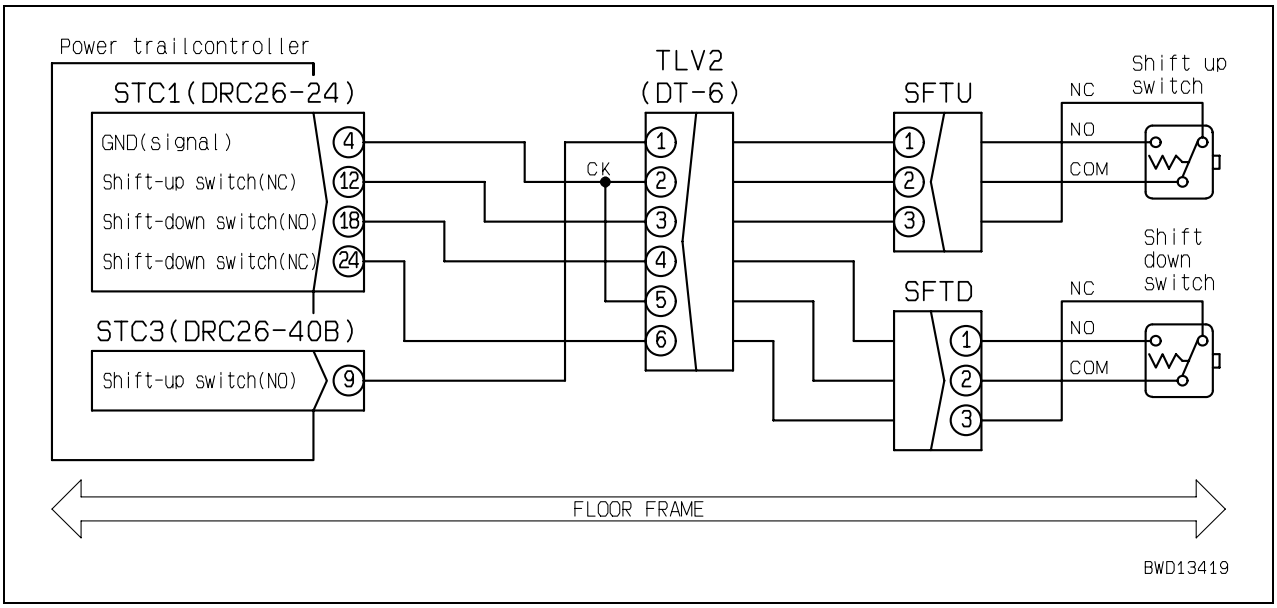

Failure code [DD13KB] Shift down Sw: Short circuit

Action code	Failure code	Trouble	Shift down Sw: Short circuit (Power train controller system)
E02	**DD13KB**		
Contents of trouble	• Signals of 2 systems of shift-down switch circuit are turned ON (closed) simultaneously.		
Action of controller	• Recognizes that shift-down switch is not pressed.		
Problem that appears on machine	• Transmission gear cannot be shifted down. • Auto shift-down function does not operate.		
Related information	• "NO" signal of 2 systems of switch is for sensing operation and "NC" signal is for detecting error. • State of shift-down switch signal can be checked with monitoring function. (Code: 40905 T/M Sw Input 1) • Method of reproducing failure code: Turn starting switch ON + Operate shift-down switch.		

	Cause		Standard value in normal state/Remarks on troubleshooting			
Possible causes and standard value in normal state	1	Defective shift-down switch (Internal disconnection)	★ Prepare with starting switch OFF, then carry out troubleshooting without turning starting switch ON.			
			SFTD (female)	Shift-down switch		
				OFF (Released)	ON (Pressed)	
			Resistance between (3) – (2)	Max. 1 Ω	Min. 1 MΩ	
			Resistance between (1) – (2)	Min. 1 MΩ	Max. 1 Ω	
	2	Ground fault in wiring harness (Contact with GND circuit)	★ Prepare with starting switch OFF, then carry out troubleshooting without turning starting switch ON.			
			Wiring harness between STC1 (female) (18) – SFTD (female) (1) and chassis ground	Resistance	Min. 1 MΩ	
			Wiring harness between STC1 (female) (24) – SFTD (female) (3) and chassis ground	Resistance	Min. 1 MΩ	
	3	Defective power train controller	★ Prepare with starting switch OFF, then turn starting switch ON and carry out troubleshooting.			
			STC1	Shift-down switch		
				OFF (Released)	ON (Pressed)	
			Voltage between (24) – (4)	Max. 1 V	5 – 11 V	
			Voltage between (18) – (4)	5 – 11 V	Max. 1 V	

Circuit diagram related to shift-up switch & shift-down switch

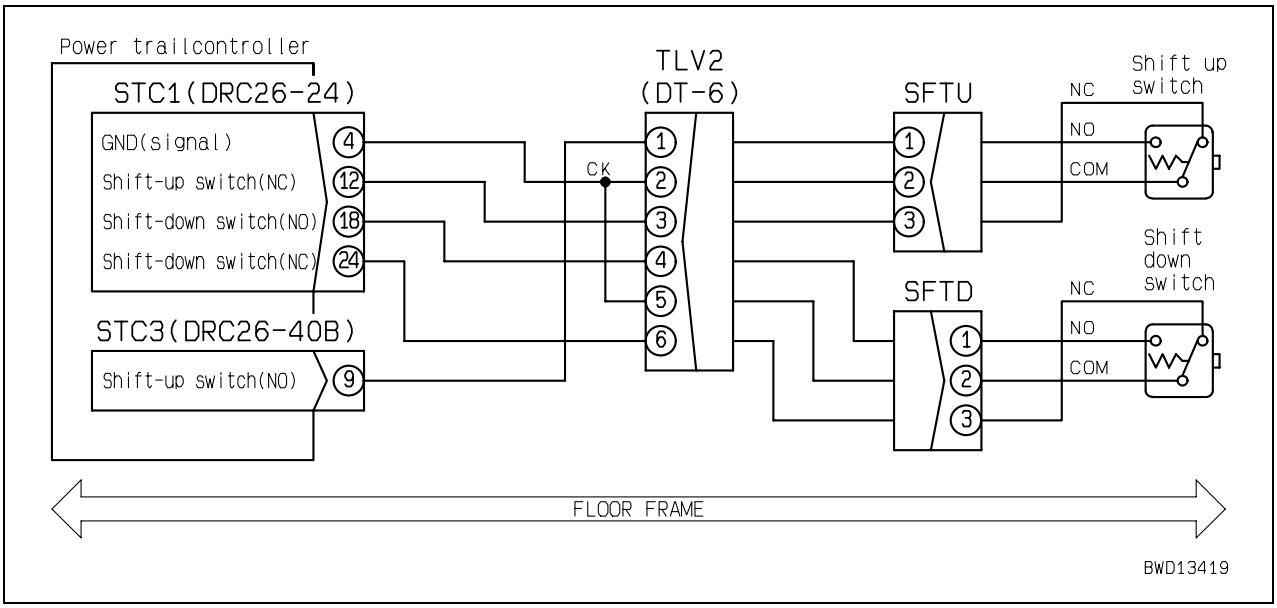

Failure code [DD14KA] Parking lever Sw: Disconnection

Action code	Failure code	Trouble	Parking lever Sw: Disconnection (Power train controller system)
E03	**DD14KA**		
Contents of trouble	• Signals of 2 systems of parking brake lever switch circuit are turned OFF (opened) simultaneously.		
Action of controller	• Recognizes that parking brake lever is in FREE position. • Limits operation of engine and transmission.		
Problem that appears on machine	• Once machine is stopped, engine speed is limited to medium (half). • Once machine is stopped, travel is limited to F1 and R1.		
Related information	• "NO" signal of 2 systems of switch is for sensing operation and "NC" signal is for detecting error. • State of parking brake lever switch signal can be checked with monitoring function. (Code: 40905 T/M Sw Input 1) • Method of reproducing failure code: Turn starting switch ON + Operate parking brake lever.		

	Cause		Standard value in normal state/Remarks on troubleshooting			
Possible causes and standard value in normal state	1	Defective fuse (FS2-5)	If fuse is broken, circuit probably has ground fault (See cause 4).			
	2	Defective parking brake lever switch (Internal disconnection)	★ Prepare with starting switch OFF, then carry out troubleshooting without turning starting switch ON.			
			PKSW (male)	Parking brake lever		
				FREE position	LOCK position	
			Resistance between (A) – (B)	Max. 1 Ω	Min. 1 MΩ	
			Resistance between (A) – (C)	Min. 1 MΩ	Max. 1 Ω	
	3	Disconnection in wiring harness (Disconnection in wiring or defective contact in connector)	★ Prepare with starting switch OFF, then carry out troubleshooting without turning starting switch ON.			
			Wiring harness between FS22 (2) – PKSW (female) (A)	Resistance	Max. 1 Ω	
			Wiring harness between STC1 (female) (23) – PKSW (female) (B)	Resistance	Max. 1 Ω	
			Wiring harness between STC1 (female) (17) – PKSW (female) (C)	Resistance	Max. 1 Ω	
	4	Ground fault in wiring harness (Contact with GND circuit)	★ Prepare with starting switch OFF, then carry out troubleshooting without turning starting switch ON.			
			Wiring harness between FS22 (2) – PKSW (female) (A) and chassis ground	Resistance	Min. 1 MΩ	
			Wiring harness between STC1 (female) (23) – PKSW (female) (B) and chassis ground	Resistance	Min. 1 MΩ	
			Wiring harness between STC1 (female) (17) – PKSW (female) (C), PKS (female) (1) or PKD (female) (1) and chassis ground	Resistance	Min. 1 MΩ	
	5	Defective power train controller	★ Prepare with starting switch OFF, then turn starting switch ON and carry out troubleshooting.			
			STC1	Parking brake lever		
				FREE position	LOCK position	
			Voltage between (23) – chassis ground	20 – 30 V	Max. 1 V	
			Voltage between (17) – chassis ground	Max. 1 V	20 – 30 V	

Circuit diagram related to parking brake lever switch and solenoid valve

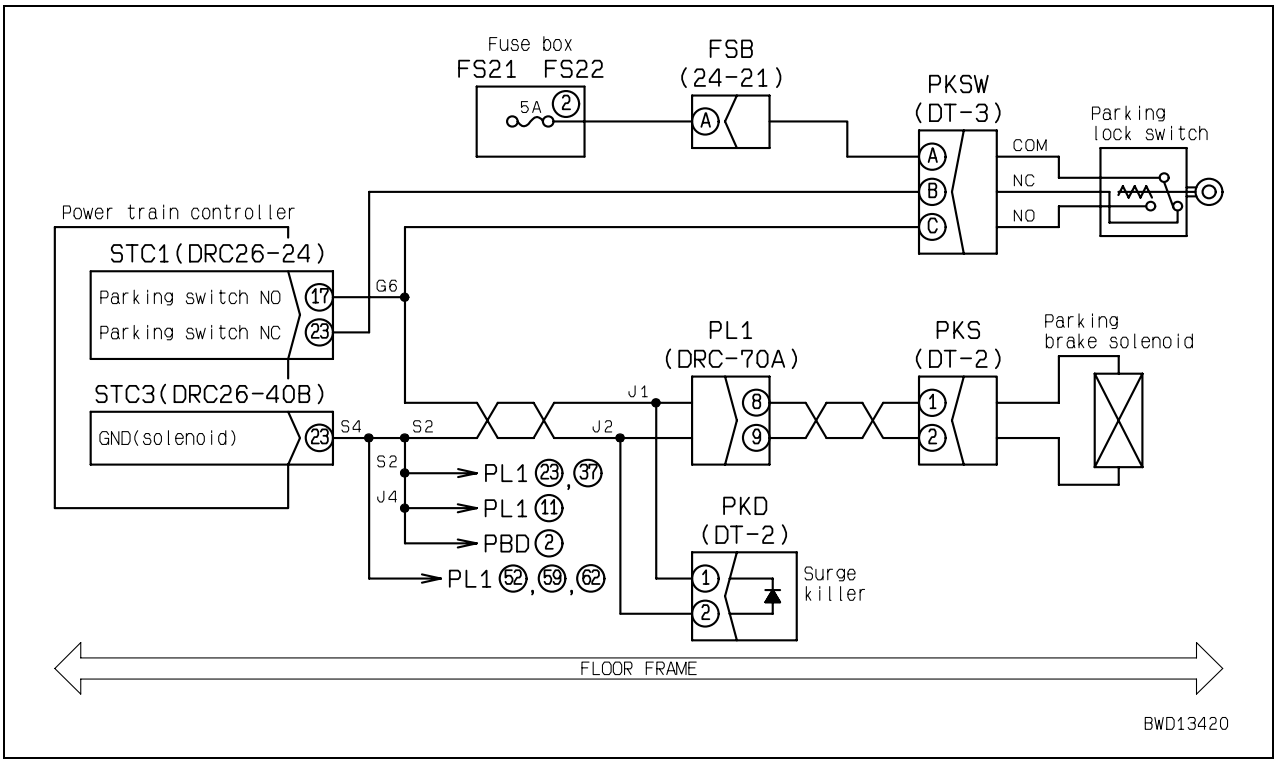

Failure code [DD14KB] Parking lever Sw: Short circuit

Action code	Failure code	Trouble	Parking lever Sw: Short circuit (Power train controller system)
E03	**DD14KB**		
Contents of trouble	• Signals of 2 systems of parking brake lever switch circuit are turned ON (closed) simultaneously.		
Action of controller	• Recognizes that parking brake lever is in FREE position. • Limits operation of engine and transmission.		
Problem that appears on machine	• Once machine is stopped, engine speed is limited to medium (half). • Once machine is stopped, travel is limited to F1 and R1.		
Related information	• "NO" signal of 2 systems of switch is for sensing operation and "NC" signal is for detecting error. • State of parking brake lever switch signal can be checked with monitoring function. (Code: 40905 T/M Sw Input 1) • Method of reproducing failure code: Turn starting switch ON + Operate parking brake lever.		

	Cause		Standard value in normal state/Remarks on troubleshooting			
Possible causes and standard value in normal state	1	Defective parking brake lever switch (Internal short circuit)	★ Prepare with starting switch OFF, then carry out troubleshooting without turning starting switch ON.			
			PKSW (male)	Parking brake lever		
				FREE position	LOCK position	
			Resistance between (A) – (B)	Max. 1 Ω	Min. 1 MΩ	
			Resistance between (A) – (C)	Min. 1 MΩ	Max. 1 Ω	
	2	Hot short (Short circuit with 24V circuit) in wiring harness	★ Prepare with starting switch OFF, then carry out troubleshooting without turning starting switch ON.			
			Wiring harness between STC1 (female) (23) – PKSW (female) (B) and chassis ground		Voltage	Max. 1 V
			Wiring harness between STC1 (female) (17) – PKSW (female) (C), PKS (female) (1) or PKD (female) (1) and chassis ground		Voltage	Max. 1 V
	3	Defective power train controller	★ Prepare with starting switch OFF, then turn starting switch ON and carry out troubleshooting.			
			STC1	Parking brake lever		
				FREE position	LOCK position	
			Voltage between (23) – chassis ground	20 – 30 V	Max. 1 V	
			Voltage between (17) – chassis ground	Max. 1 V	20 – 30 V	

Circuit diagram related to parking brake lever switch and solenoid valve

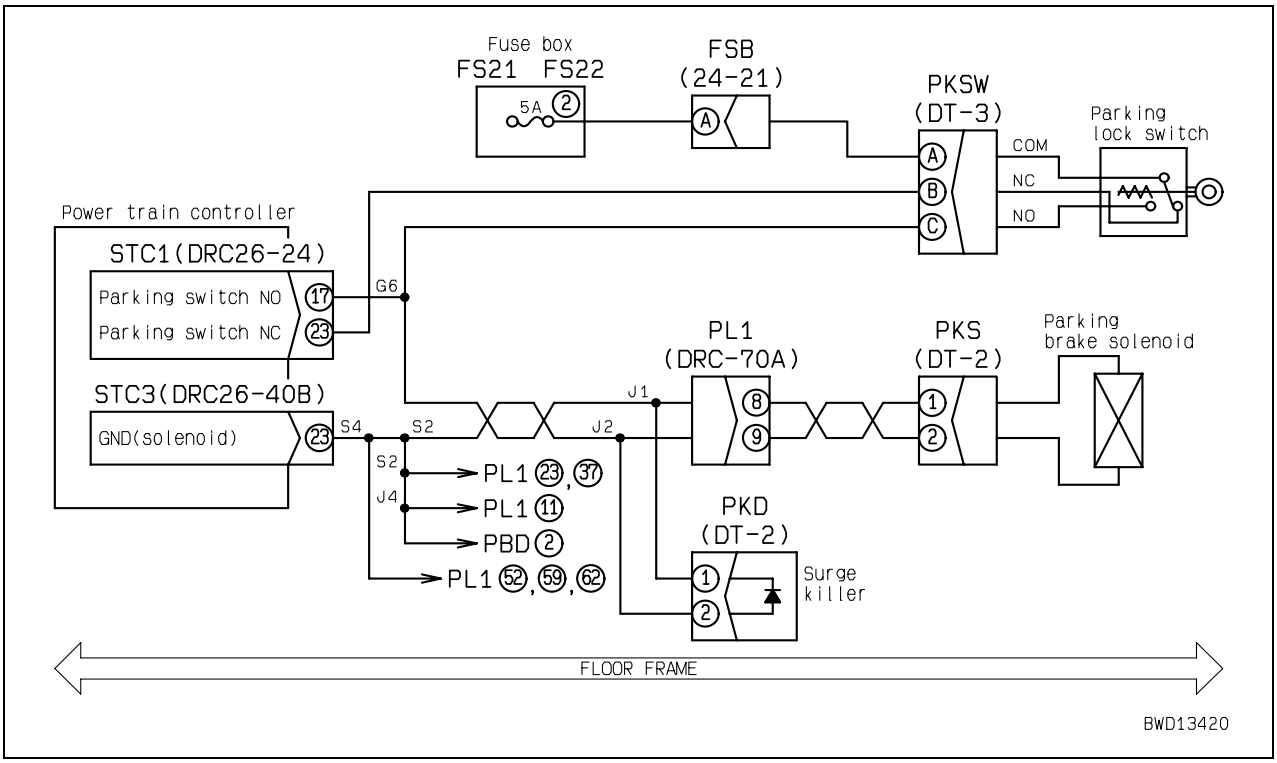

Failure code [DDDDKA] Back up brake Sw: Disconnection

Action code	Failure code	Trouble	Back up brake Sw: Disconnection (Power train controller system)
E02	**DDDDKA**		
Contents of trouble	• Signals of 2 systems of brake pedal switch circuit are turned OFF (opened) simultaneously.		
Action of controller	• Recognizes that brake pedal is not pressed. • Limits operation of engine and transmission.		
Problem that appears on machine	• Once machine is stopped, engine speed is limited to medium (half). • Once machine is stopped, travel is limited to F1 and R1.		
Related information	• "NO" signal of 2 systems of switch is for sensing operation and "NC" signal is for detecting error. • State of brake pedal switch signal can be checked with monitoring function. (Code: 40905 T/M Sw Input1) • Method of reproducing failure code: Turn starting switch ON + Operate brake pedal.		

	Cause		Standard value in normal state/Remarks on troubleshooting			
Possible causes and standard value in normal state	1	Defective fuse (FS2-1)	If fuse is broken, circuit probably has ground fault (See cause 4).			
	2	Defective brake pedal switch (Internal disconnection)	★ Prepare with starting switch OFF, then carry out troubleshooting without turning starting switch ON.			
			BKSW (male)	Brake pedal		
				Released	Pressed	
			Resistance between (A) – (B)	Max. 1 Ω	Min. 1 MΩ	
			Resistance between (A) – (C)	Min. 1 MΩ	Max. 1 Ω	
	3	Disconnection in wiring harness (Disconnection in wiring or defective contact in connector)	★ Prepare with starting switch OFF, then carry out troubleshooting without turning starting switch ON.			
			Wiring harness between FS22 (1) – BKSW (female) (A)	Resistance	Max. 1 Ω	
			Wiring harness between STC1 (female) (11) – BKSW (female) (B)	Resistance	Max. 1 Ω	
			Wiring harness between STC1 (female) (5) – BKSW (female) (C)	Resistance	Max. 1 Ω	
	4	Ground fault in wiring harness (Contact with GND circuit)	★ Prepare with starting switch OFF, then carry out troubleshooting without turning starting switch ON.			
			Wiring harness between FS22 (1) – BKSW (female) (A) and chassis ground	Resistance	Min. 1 MΩ	
			Wiring harness between STC1 (female) (11) – BKSW (female) (B) and chassis ground	Resistance	Min. 1 MΩ	
			Wiring harness between STC1 (female) (5) – BKSW (female) (C), PBS (female) (1) or PBD (female) (1) and chassis ground	Resistance	Min. 1 MΩ	
	5	Defective power train controller	★ Prepare with starting switch OFF, then turn starting switch ON and carry out troubleshooting.			
			STC1	Brake pedal		
				Released	Pressed	
			Voltage between (11) – chassis ground	20 – 30 V	Max. 1 V	
			Voltage between (5) – chassis ground	Max. 1 V	20 – 30 V	

Circuit diagram related to brake pedal switch and solenoid valve

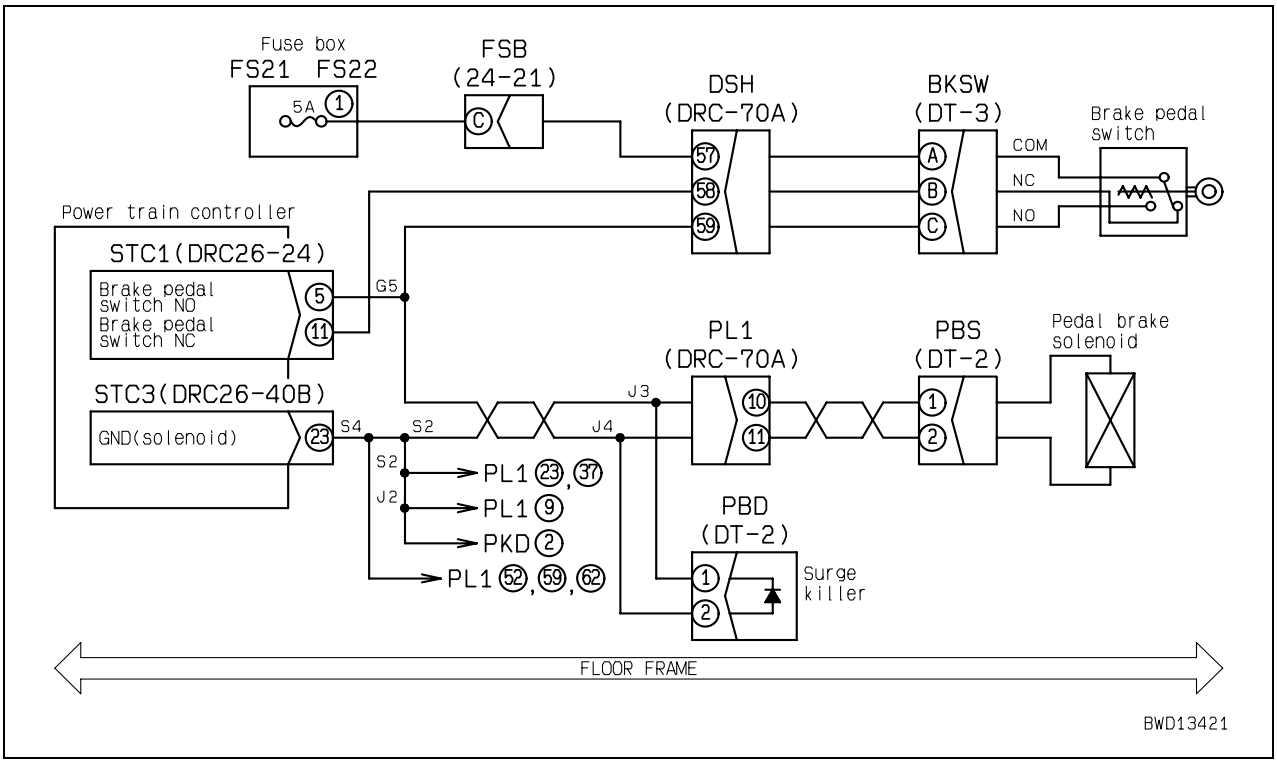

Failure code [DDDDKB] Back up brake Sw: Short circuit

Action code	Failure code	Trouble	Back up brake Sw: Short circuit (Power train controller system)
E02	**DDDDKB**		
Contents of trouble	• Signals of 2 systems of brake pedal switch circuit are turned ON (closed) simultaneously.		
Action of controller	• Recognizes that brake pedal is not pressed. • Limits operation of engine and transmission.		
Problem that appears on machine	• Once machine is stopped, engine speed is limited to medium (half). • Once machine is stopped, travel is limited to F1 and R1.		
Related information	• "NO" signal of 2 systems of switch is for sensing operation and "NC" signal is for detecting error. • State of brake pedal switch signal can be checked with monitoring function. (Code: 40905 T/M Sw Input 1) • Method of reproducing failure code: Turn starting switch ON + Operate brake pedal.		

	Cause		Standard value in normal state/Remarks on troubleshooting			
Possible causes and standard value in normal state	1	Defective brake pedal switch (Internal disconnection)	★ Prepare with starting switch OFF, then carry out troubleshooting without turning starting switch ON.			
			BKSW (male)	Brake pedal		
				Released	Pressed	
			Resistance between (A) – (B)	Max. 1 Ω	Min. 1 MΩ	
			Resistance between (A) – (C)	Min. 1 MΩ	Max. 1 Ω	
	2	Hot short (Short circuit with 24V circuit) in wiring harness	★ Prepare with starting switch OFF, then carry out troubleshooting without turning starting switch ON.			
			Wiring harness between STC1 (female) (11) – BKSW (female) (B) and chassis ground	Voltage	Max. 1 V	
			Wiring harness between STC1 (female) (5) – BKSW (female) (C), PBS (female) (1), or PBD (female) (1) and chassis ground	Voltage	Max. 1 V	
	3	Defective power train controller	★ Prepare with starting switch OFF, then turn starting switch ON and carry out troubleshooting.			
			STC1	Brake pedal		
				Released	Pressed	
			Voltage between (11) – chassis ground	20 – 30 V	Max. 1 V	
			Voltage between (5) – chassis ground	Max. 1 V	20 – 30 V	

Circuit diagram related to brake pedal switch and solenoid valve

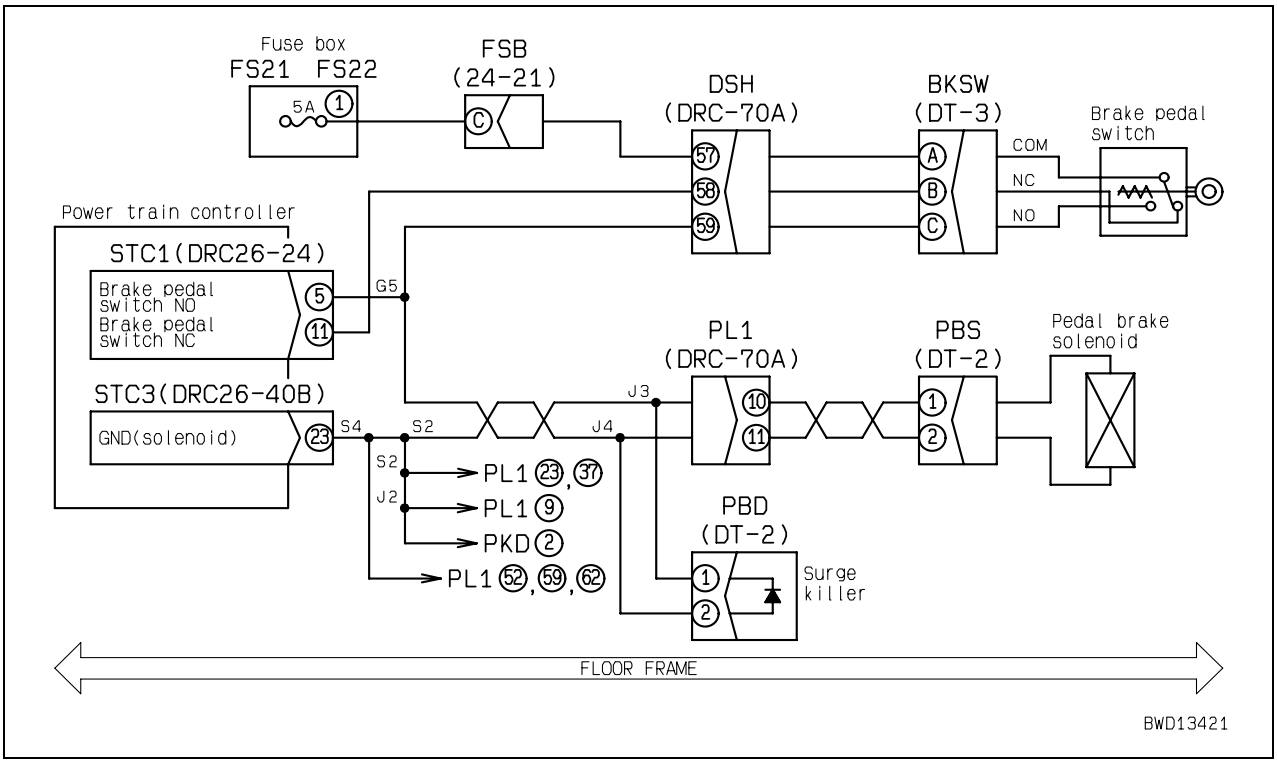

Failure code [DDDDKX] Back up brake Sw: Signal mismatch

Action code	Failure code	Trouble	Back up brake Sw: Signal mismatch (Power train controller system)
E02	**DDDDKX**		
Contents of trouble	• Brake pedal potentiometer signal does not match to brake pedal switch signal.		
Action of controller	• None in particular.		
Problem that appears on machine	• Backup brake may not operate.		
Related information	• State of brake pedal potentiometer signal can be checked with monitoring function. (Code: 50400 Brake Pedal Potentio) • Method of reproducing failure code: Turn starting switch ON + Operate brake pedal.		

	Cause		Standard value in normal state/Remarks on troubleshooting
Possible causes and standard value in normal state	1	Defective brake pedal switch system	If failure code [**DDDDKA**] or [**DDDDKB**] is also displayed, carry out troubleshooting for it first.
	2	Defective brake pedal switch	Adjust brake pedal and perform operation of reproducing trouble. If "E" of failure code disappears at this time, system is normal. • Testing and adjusting item: Adjusting brake pedal
	3	Defective power train controller	If causes 1 – 2 are not detected, power train controller may be defective. (Since trouble is in system, troubleshooting cannot be carried out.)

Failure code [DDN7KA] WEQ Knob Sw (down): Disconnection

Action code	Failure code	Trouble	WEQ Knob Sw (down): Disconnection (Work equipment controller system)
E02	**DDN7KA**		
Contents of trouble	• Signals of 2 systems of blade pitch switch circuit are turned OFF (opened) simultaneously.		
Action of controller	• Recognizes that blade pitch switch is not pressed.		
Problem that appears on machine	• Blade pitch function does not operate.		
Related information	• "NO" signal of 2 systems of switch is for sensing operation and "NC" signal is for detecting error. • State of blade pitch switch signal can be checked with monitoring function. (Code: 70300 Blade Sw Input) • Method of reproducing failure code: Turn starting switch ON + Operate blade pitch switch.		

	Cause		Standard value in normal state/Remarks on troubleshooting			
Possible causes and standard value in normal state	1	Defective blade pitch switch (Internal disconnection)	★ Prepare with starting switch OFF, then carry out troubleshooting without turning starting switch ON.			
			BNSL (female)	Blade pitch switch		
				OFF (Released)	ON (Pressed)	
			Resistance between (3) – (2)	Max. 1 Ω	Min. 1 MΩ	
			Resistance between (1) – (2)	Min. 1 MΩ	Max. 1 Ω	
	2	Disconnection in wiring harness (Disconnection in wiring or defective contact in connector)	★ Prepare with starting switch OFF, then carry out troubleshooting without turning starting switch ON.			
			Wiring harness between WEC2 (female) (16) – BNSL (female) (1)		Resistance	Max. 1 Ω
			Wiring harness between WEC1 (female) (4) – BNSL (female) (2)		Resistance	Max. 1 Ω
			Wiring harness between WEC2 (female) (6) – BNSL (female) (3)		Resistance	Max. 1 Ω
	3	Hot short (Short circuit with 24V circuit) in wiring harness	★ Prepare with starting switch OFF, then turn starting switch ON and carry out troubleshooting.			
			Wiring harness between WEC2 (female) (16) – BNSL (female) (1) and chassis ground		Voltage	Max. 1 V
			Wiring harness between WEC2 (female) (6) – BNSL (female) (3) and chassis ground		Voltage	Max. 1 V
	4	Defective work equipment controller	★ Prepare with starting switch OFF, then turn starting switch ON and carry out troubleshooting.			
			WEC1, WEC2	Blade pitch switch		
				OFF (Released)	ON (Pressed)	
			Voltage between WEC2 (6) – WEC1 (4)	Max. 1 V	5 – 11 V	
			Voltage between WEC2 (16) – WEC1 (4)	5 – 11 V	Max. 1 V	

Circuit diagram related to blade float switch and blade pitch switch

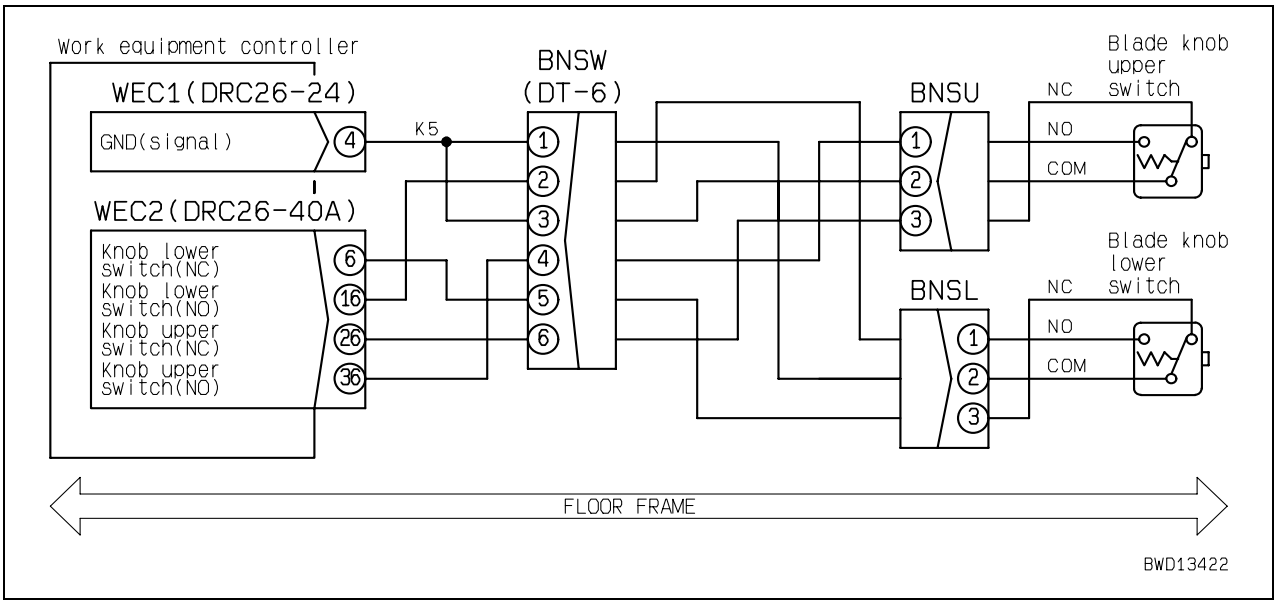

Failure code [DDN7KB] WEQ Knob Sw (down): Short circuit

Action code	Failure code	Trouble	WEQ Knob Sw (down): Short circuit (Work equipment controller system)
E02	**DDN7KB**		
Contents of trouble	• Signals of 2 systems of blade pitch switch circuit are turned ON (closed) simultaneously.		
Action of controller	• Recognizes that blade pitch switch is not pressed.		
Problem that appears on machine	• Blade pitch function does not operate.		
Related information	• "NO" signal of 2 systems of switch is for sensing operation and "NC" signal is for detecting error. • State of blade pitch switch signal can be checked with monitoring function. (Code: 70300 Blade Sw Input) • Method of reproducing failure code: Turn starting switch ON + Operate blade pitch switch.		

<table>
<tr><td rowspan="11">Possible causes and standard value in normal state</td><td colspan="2">Cause</td><td colspan="4">Standard value in normal state/Remarks on troubleshooting</td></tr>
<tr><td rowspan="4">1</td><td rowspan="4">Defective blade pitch switch (Internal short circuit)</td><td colspan="4">★ Prepare with starting switch OFF, then carry out troubleshooting without turning starting switch ON.</td></tr>
<tr><td rowspan="2">BNSL (female)</td><td colspan="3">Blade pitch switch</td></tr>
<tr><td>OFF (Released)</td><td colspan="2">ON (Pressed)</td></tr>
<tr><td>Resistance between (3) – (2)</td><td>Max. 1 Ω</td><td colspan="2">Min. 1 MΩ</td></tr>
<tr><td>Resistance between (1) – (2)</td><td>Min. 1 MΩ</td><td colspan="2">Max. 1 Ω</td></tr>
<tr><td rowspan="3">2</td><td rowspan="3">Ground fault in wiring harness (Contact with GND circuit)</td><td colspan="4">★ Prepare with starting switch OFF, then carry out troubleshooting without turning starting switch ON.</td></tr>
<tr><td colspan="2">Wiring harness between WEC2 (female) (16) – BNSL (female) (1) and chassis ground</td><td>Resistance</td><td>Min. 1 MΩ</td></tr>
<tr><td colspan="2">Wiring harness between WEC2 (female) (6) – BNSL (female) (3) and chassis ground</td><td>Resistance</td><td>Min. 1 MΩ</td></tr>
<tr><td rowspan="4">3</td><td rowspan="4">Defective work equipment controller</td><td colspan="4">★ Prepare with starting switch OFF, then turn starting switch ON and carry out troubleshooting.</td></tr>
<tr><td rowspan="2">WEC1, WEC2</td><td colspan="3">Blade pitch switch</td></tr>
<tr><td>OFF (Released)</td><td colspan="2">ON (Pressed)</td></tr>
<tr><td>Voltage between WEC2 (6) – WEC1 (4)</td><td>Max. 1 V</td><td colspan="2">5 – 11 V</td></tr>
<tr><td>Voltage between WEC2 (16) – WEC1 (4)</td><td>5 – 11 V</td><td colspan="2">Max. 1 V</td></tr>
</table>

Circuit diagram related to blade float switch and blade pitch switch

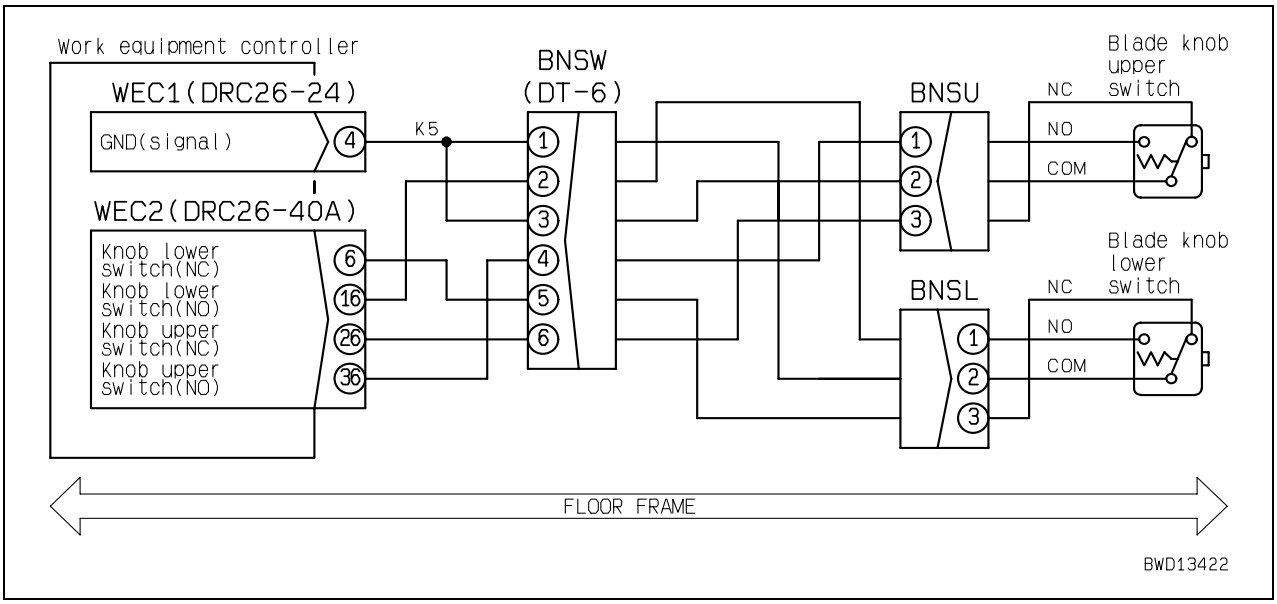

Failure code [DDN9KA] WEQ Knob Sw (up): Disconnection

Action code	Failure code	Trouble	WEQ Knob Sw (up): Disconnection (Work equipment controller system)
E01	**DDN9KA**		
Contents of trouble	• Signals of 2 systems of blade float switch circuit are turned OFF (opened) simultaneously.		
Action of controller	• Recognizes that blade float switch is not pressed.		
Problem that appears on machine	• Blade float function does not operate.		
Related information	• "NO" signal of 2 systems of switch is for sensing operation and "NC" signal is for detecting error. • State of blade float switch signal can be checked with monitoring function. (Code: 70300 Blade Sw Input) • Method of reproducing failure code: Turn starting switch ON + Operate blade float switch.		

	Cause		Standard value in normal state/Remarks on troubleshooting			
Possible causes and standard value in normal state	1	Defective blade float switch (Internal disconnection)	★ Prepare with starting switch OFF, then carry out troubleshooting without turning starting switch ON.			
			BNSU (male)	Blade float switch		
				OFF (Released)	ON (Pressed)	
			Resistance between (3) – (2)	Max. 1 Ω	Min. 1 MΩ	
			Resistance between (1) – (2)	Min. 1 MΩ	Max. 1 Ω	
	2	Disconnection in wiring harness (Disconnection in wiring or defective contact in connector)	★ Prepare with starting switch OFF, then carry out troubleshooting without turning starting switch ON.			
			Wiring harness between WEC2 (female) (36) – BNSU (female) (1)		Resistance	Max. 1 Ω
			Wiring harness between WEC1 (female) (4) – BNSU (female) (2)		Resistance	Max. 1 Ω
			Wiring harness between WEC2 (female) (26) – BNSU (female) (3)		Resistance	Max. 1 Ω
	3	Hot short (Short circuit with 24V circuit) in wiring harness	★ Prepare with starting switch OFF, then turn starting switch ON and carry out troubleshooting.			
			Wiring harness between WEC2 (female) (36) – BNSU (female) (1) and chassis ground		Voltage	Max. 1 V
			Wiring harness between WEC2 (female) (26) – BNSU (female) (3) and chassis ground		Voltage	Max. 1 V
	4	Defective work equipment controller	★ Prepare with starting switch OFF, then turn starting switch ON and carry out troubleshooting.			
			WEC1, WEC2	Blade float switch		
				OFF (Released)	ON (Pressed)	
			Voltage between WEC2 (26) – WEC1 (4)	Max. 1 V	5 – 11 V	
			Voltage between WEC2 (36) – WEC1 (4)	5 – 11 V	Max. 1 V	

Circuit diagram related to blade float switch and blade pitch switch

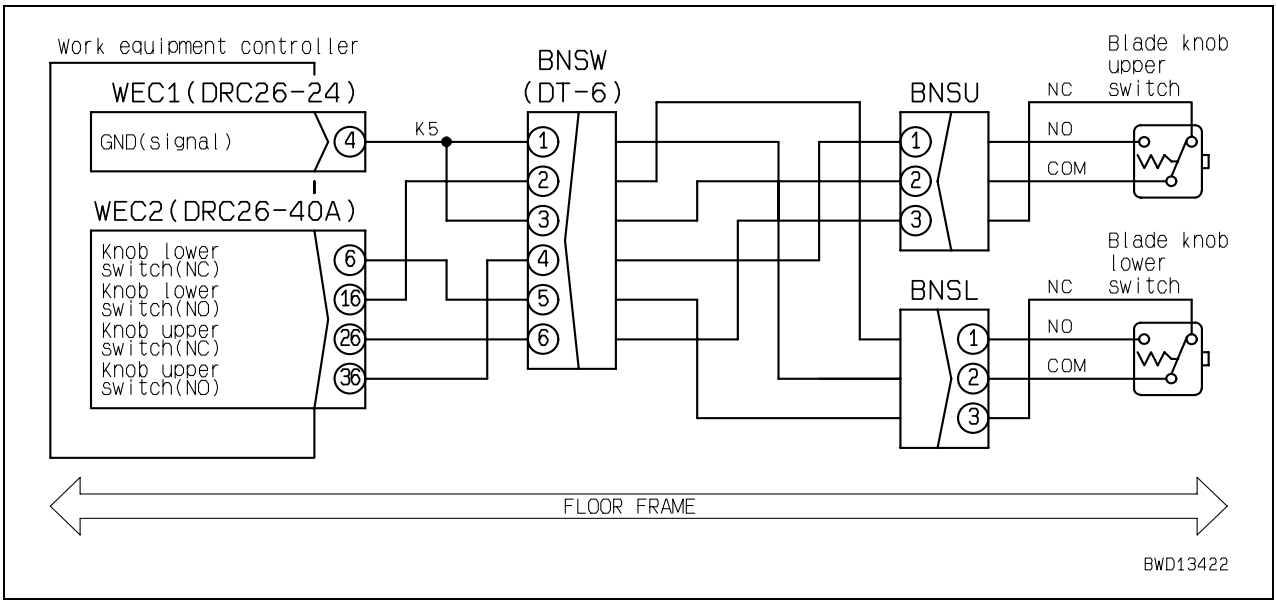

Failure code [DDN9KB] WEQ Knob Sw (up): Short circuit

Action code	Failure code	Trouble	WEQ Knob Sw (up): Short circuit (Work equipment controller system)
E01	**DDN9KB**		
Contents of trouble	• Signals of 2 systems of blade float switch circuit are turned ON (closed) simultaneously.		
Action of controller	• Recognizes that blade float switch is not pressed.		
Problem that appears on machine	• Blade float function does not operate.		
Related information	• "NO" signal of 2 systems of switch is for sensing operation and "NC" signal is for detecting error. • State of blade float switch signal can be checked with monitoring function. (Code: 70300 Blade Sw Input) • Method of reproducing failure code: Turn starting switch ON + Operate blade float switch.		

	Cause		Standard value in normal state/Remarks on troubleshooting			
Possible causes and standard value in normal state	1	Defective blade float switch (Internal short circuit)	★ Prepare with starting switch OFF, then carry out troubleshooting without turning starting switch ON.			
			BNSU (male)	Blade float switch		
				OFF (Released)	ON (Pressed)	
			Resistance between (3) – (2)	Max. 1 Ω	Min. 1 MΩ	
			Resistance between (1) – (2)	Min. 1 MΩ	Max. 1 Ω	
	2	Ground fault in wiring harness (Contact with GND circuit)	★ Prepare with starting switch OFF, then carry out troubleshooting without turning starting switch ON.			
			Wiring harness between WEC2 (female) (36) – BNSU (female) (1) and chassis ground		Resistance	Min. 1 MΩ
			Wiring harness between WEC2 (female) (26) – BNSU (female) (3) and chassis ground		Resistance	Min. 1 MΩ
	3	Defective work equipment controller	★ Prepare with starting switch OFF, then turn starting switch ON and carry out troubleshooting.			
			WEC1, WEC2	Blade float switch		
				OFF (Released)	ON (Pressed)	
			Voltage between WEC2 (26) – WEC1 (4)	Max. 1 V	5 – 11 V	
			Voltage between WEC2 (36) – WEC1 (4)	5 – 11 V	Max. 1 V	

Circuit diagram related to blade float switch and blade pitch switch

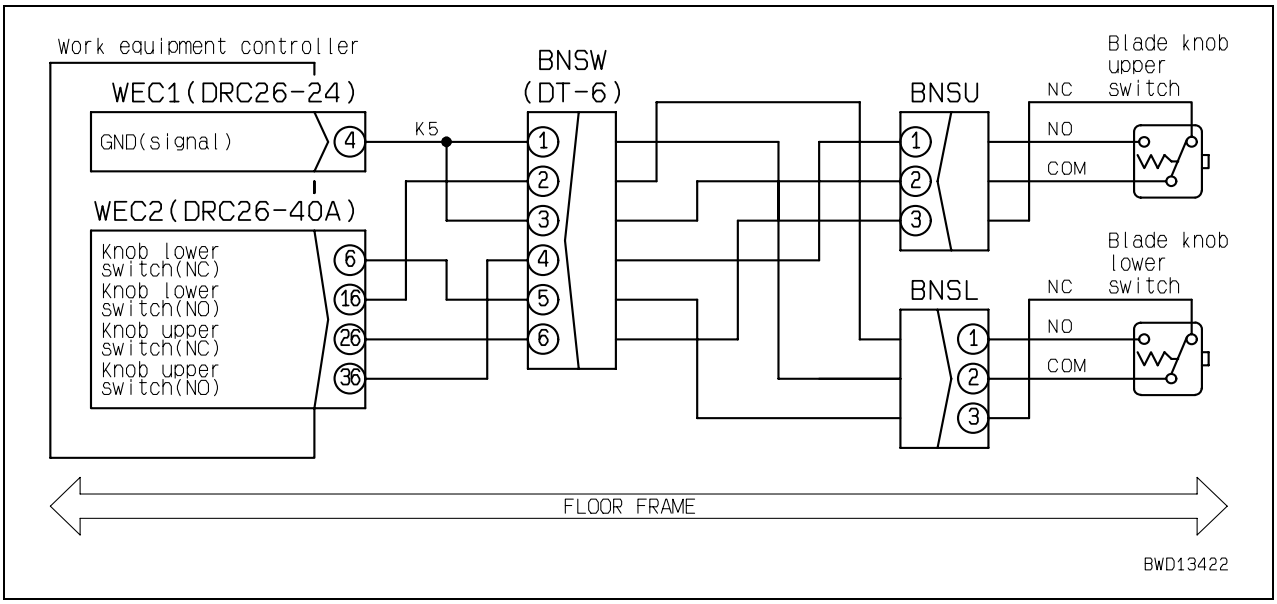

Failure code [DDNLKA] Weq lock Sw: Disconnection

Action code	Failure code	Trouble	Weq lock Sw: Disconnection (Work equipment controller system)
E03	**DDNLKA**		
Contents of trouble	• Signals of 2 systems of work equipment lock lever switch circuit are turned OFF (opened) simultaneously.		
Action of controller	• Recognizes that work equipment lock lever is in FREE position. • Limits operation of engine and transmission.		
Problem that appears on machine	• Once machine is stopped, engine speed is limited to medium (half). • Once machine is stopped, travel is limited to F1 and R1.		
Related information	• "NO" signal of 2 systems of switch is for sensing operation and "NC" signal is for detecting error. • State of blade float switch signal can be checked with monitoring function. (Code: 70300 Blade Sw Input) • Method of reproducing failure code: Turn starting switch ON + Operate work equipment lock lever.		

<table>
<tr><td rowspan="15">Possible causes and standard value in normal state</td><td colspan="2">Cause</td><td colspan="4">Standard value in normal state/Remarks on troubleshooting</td></tr>
<tr><td rowspan="4">1</td><td rowspan="4">Defective work equipment lock lever switch (Internal disconnection)</td><td colspan="4">★ Prepare with starting switch OFF, then carry out troubleshooting without turning starting switch ON.</td></tr>
<tr><td rowspan="2">WELK (male)</td><td colspan="3">Work equipment lock lever</td></tr>
<tr><td>FREE position</td><td colspan="2">LOCK position</td></tr>
<tr><td>Resistance between (B) – (A)</td><td>Max. 1 Ω</td><td colspan="2">Min. 1 MΩ</td></tr>
<tr><td>Resistance between (C) – (A)</td><td>Min. 1 MΩ</td><td colspan="2">Max. 1 Ω</td></tr>
<tr><td rowspan="4">2</td><td rowspan="4">Disconnection in wiring harness (Disconnection in wiring or defective contact in connector)</td><td colspan="4">★ Prepare with starting switch OFF, then carry out troubleshooting without turning starting switch ON.</td></tr>
<tr><td colspan="2">Wiring harness between WEC1 (female) (10) – WELK (female) (A)</td><td>Resistance</td><td>Max. 1 Ω</td></tr>
<tr><td colspan="2">Wiring harness between WEC2 (female) (5) – WELK (female) (B)</td><td>Resistance</td><td>Max. 1 Ω</td></tr>
<tr><td colspan="2">Wiring harness between WEC2 (female) (15) – WELK (female) (C)</td><td>Resistance</td><td>Max. 1 Ω</td></tr>
<tr><td rowspan="3">3</td><td rowspan="3">Hot short (Short circuit with 24V circuit) in wiring harness</td><td colspan="4">★ Prepare with starting switch OFF, then turn starting switch ON and carry out troubleshooting.</td></tr>
<tr><td colspan="2">Wiring harness between WEC2 (female) (5) – WELK (female) (B) and chassis ground</td><td>Voltage</td><td>Max. 1 V</td></tr>
<tr><td colspan="2">Wiring harness between WEC2 (female) (15) – WELK (female) (C) and chassis ground</td><td>Voltage</td><td>Max. 1 V</td></tr>
<tr><td rowspan="4">4</td><td rowspan="4">Defective work equipment controller</td><td colspan="4">★ Prepare with starting switch OFF, then turn starting switch ON and carry out troubleshooting.</td></tr>
<tr><td rowspan="2">WEC1, WEC2</td><td colspan="3">Work equipment lock lever</td></tr>
<tr><td>FREE position</td><td colspan="2">LOCK position</td></tr>
<tr><td>Voltage between WEC2 (5) – WEC1 (10)</td><td>Max. 1 V</td><td colspan="2">5 – 11 V</td></tr>
<tr><td>Voltage between WEC2 (15) – WEC1 (10)</td><td>5 – 11 V</td><td colspan="2">Max. 1 V</td></tr>
</table>

Circuit diagram related to work equipment lock lever switch

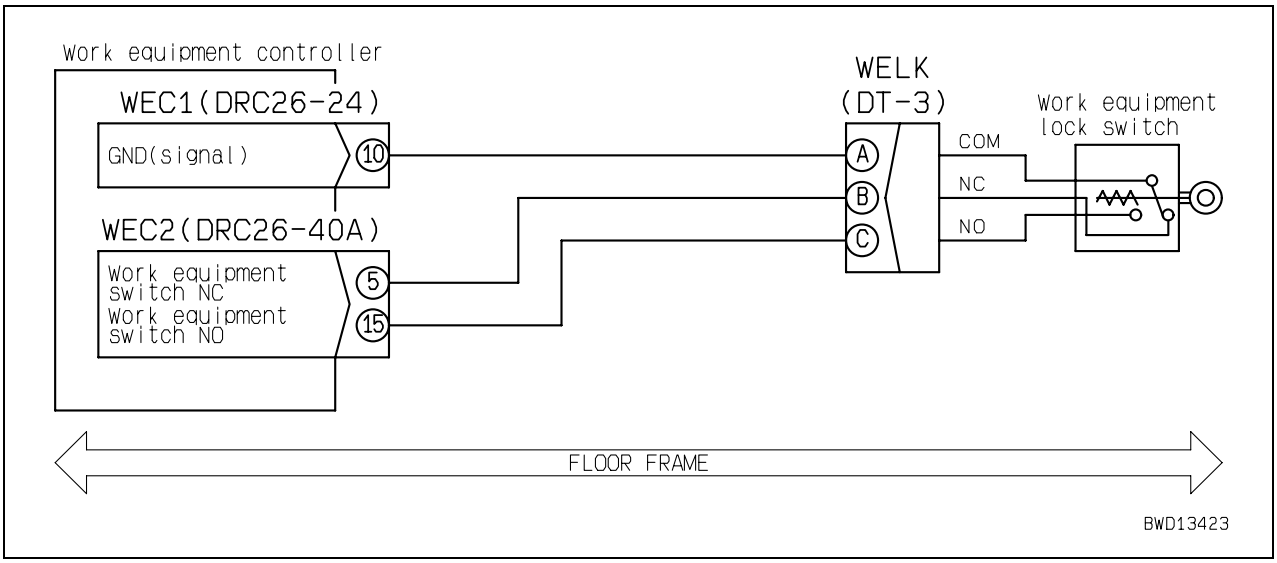

Failure code [DDNLKB] Weq lock Sw: Short circuit

Action code	Failure code	Trouble	Weq lock Sw: Short circuit (Work equipment controller system)
E03	**DDNLKB**		
Contents of trouble	• Signals of 2 systems of work equipment lock lever switch circuit are turned ON (closed) simultaneously.		
Action of controller	• Recognizes that work equipment lock lever is in FREE position. • Limits operation of engine and transmission.		
Problem that appears on machine	• Once machine is stopped, engine speed is limited to medium (half). • Once machine is stopped, travel is limited to F1 and R1.		
Related information	• "NO" signal of 2 systems of switch is for sensing operation and "NC" signal is for detecting error. • State of blade float switch signal can be checked with monitoring function. (Code: 70300 Blade Sw Input) • Method of reproducing failure code: Turn starting switch ON + Operate work equipment lock lever.		

<table>
<tr><td rowspan="11">Possible causes and standard value in normal state</td><td colspan="2">Cause</td><td colspan="4">Standard value in normal state/Remarks on troubleshooting</td></tr>
<tr><td rowspan="4">1</td><td rowspan="4">Defective work equipment lock lever switch (Internal short circuit)</td><td colspan="4">★ Prepare with starting switch OFF, then carry out troubleshooting without turning starting switch ON.</td></tr>
<tr><td rowspan="2">WELK (male)</td><td colspan="3">Work equipment lock lever</td></tr>
<tr><td>FREE position</td><td colspan="2">LOCK position</td></tr>
<tr><td>Resistance between (B) – (A)</td><td>Max. 1 Ω</td><td colspan="2">Min. 1 MΩ</td></tr>
<tr><td>Resistance between (C) – (A)</td><td>Min. 1 MΩ</td><td colspan="2">Max. 1 Ω</td></tr>
<tr><td rowspan="3">2</td><td rowspan="3">Ground fault in wiring harness (Contact with GND circuit)</td><td colspan="4">★ Prepare with starting switch OFF, then carry out troubleshooting without turning starting switch ON.</td></tr>
<tr><td colspan="2">Wiring harness between WEC2 (female) (5) – WELK (female) (B) and chassis ground</td><td>Resistance</td><td>Min. 1 MΩ</td></tr>
<tr><td colspan="2">Wiring harness between WEC2 (female) (15) – WELK (female) (C) and chassis ground</td><td>Resistance</td><td>Min. 1 MΩ</td></tr>
<tr><td rowspan="4">3</td><td rowspan="4">Defective work equipment controller</td><td colspan="4">★ Prepare with starting switch OFF, then turn starting switch ON and carry out troubleshooting.</td></tr>
<tr><td rowspan="2">WEC1, WEC2</td><td colspan="3">Work equipment lock lever</td></tr>
<tr><td>FREE position</td><td colspan="2">LOCK position</td></tr>
<tr><td>Voltage between WEC2 (5) – WEC1 (10)</td><td>Max. 1 V</td><td colspan="2">5 – 11 V</td></tr>
<tr><td>Voltage between WEC2 (15) – WEC1 (10)</td><td>5 – 11 V</td><td colspan="2">Max. 1 V</td></tr>
</table>

Circuit diagram related to work equipment lock lever switch

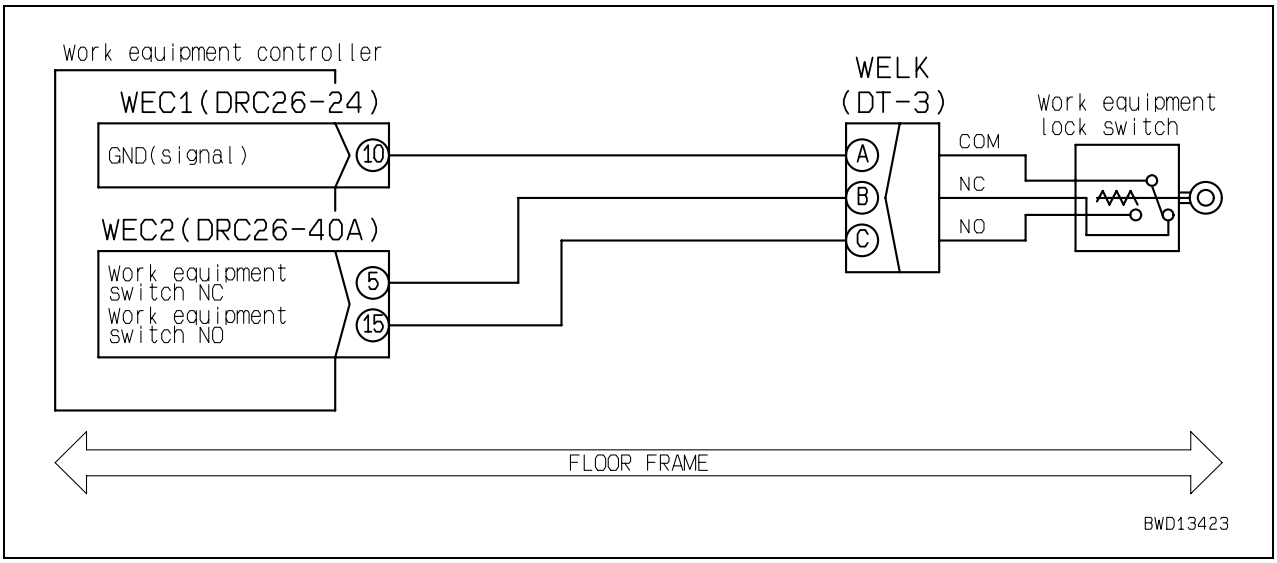

Failure code [DDTSL1] S/C: Fill high

Action code	Failure code	Trouble	S/C: Fill high (Power train controller system)
E02	**DDTSL1**		
Contents of trouble	• When signal is not output to solenoid circuit of torque converter stator clutch ECMV, fill switch signal is turned ON.		
Action of controller	• None in particular.		
Problem that appears on machine	• Travel torque may not be obtained sufficiently.		
Related information	• State of fill switch signal of stator clutch ECMV can be checked with monitoring function. (Code: 31520 T/M Fill Sw Input 2) • Method of reproducing failure code: Start engine + Set travel lever in N (Neutral).		

	Cause		Standard value in normal state/Remarks on troubleshooting			
Possible causes and standard value in normal state	1	Defective fill switch of stator clutch ECMV (Internal short circuit)	★ Prepare with starting switch OFF, then start engine, select automatic gearshift mode, and carry out troubleshooting.			
			FSTC (male)	PCCS lever (Travel gear speed)	Resistance	
			Between (1) – chassis ground	N	Max. 1 Ω	
				Locked up at F1, F2, or F3	Min. 1 MΩ	
	2	Ground fault in wiring harness (Contact with GND circuit)	★ Prepare with starting switch OFF, then carry out troubleshooting without turning starting switch ON.			
			Wiring harness between STC2 (female) (26) – FSTC (female) (1) and chassis ground		Resistance	Min. 1 MΩ
	3	Defective power train controller	★ Prepare with starting switch OFF, then start engine, select automatic gearshift mode, and carry out troubleshooting.			
			STC2	PCCS lever (Travel gear speed)	Voltage	
			Between (26) – chassis ground	N	Max. 1 V	
				Locked up at F1, F2, or F3	5 – 11 V	
	4	Defective hydraulic system	If causes 1 – 3 are not detected in electrical system, hydraulic system may be defective. Carry out related troubleshooting (H mode).			

Circuit diagram related to torque converter stator clutch ECMV

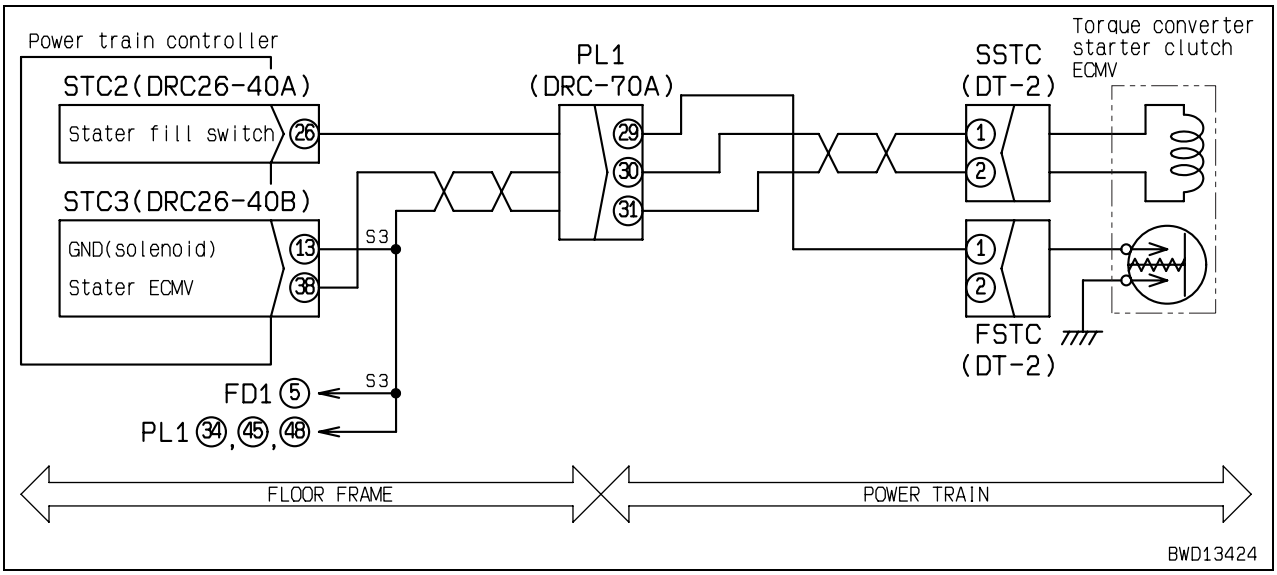

Failure code [DDTSLH] S/C: Fill low

Action code	Failure code	Trouble	S/C: Fill low (Power train controller system)
E02	**DDTSLH**		
Contents of trouble	• When signal is output to solenoid circuit of torque converter stator clutch ECMV, fill switch signal is turned OFF.		
Action of controller	• None in particular.		
Problem that appears on machine	• Travel torque may not be obtained sufficiently.		
Related information	• State of fill switch signal of stator clutch ECMV can be checked with monitoring function. (Code: 31520 T/M Fill Sw Input 2) • Method of reproducing failure code: Start engine + Set travel lever in F (Forward) (Automatic gearshift mode).		

	Cause		Standard value in normal state/Remarks on troubleshooting			
Possible causes and standard value in normal state	1	Defective fill switch of stator clutch ECMV (Internal disconnection)	★ Prepare with starting switch OFF, then start engine, select automatic gearshift mode, and carry out troubleshooting.			
			FSTC (male)	PCCS lever (Travel gear speed)	Resistance	
			Between (1) – chassis ground	N	Max. 1 Ω	
				Locked up at F1, F2, or F3	Min. 1 MΩ	
	2	Disconnection in wiring harness (Disconnection in wiring or defective contact in connector)	★ Prepare with starting switch OFF, then carry out troubleshooting without turning starting switch ON.			
			Wiring harness between STC2 (female) (26) – FSTC (female) (1)		Resistance	Max. 1 Ω
	3	Defective power train controller	★ Prepare with starting switch OFF, then start engine, select automatic gearshift mode, and carry out troubleshooting.			
			STC2	PCCS lever (Travel gear speed)	Voltage	
			Between (26) – chassis ground	N	Max. 1 V	
				Locked up at F1, F2, or F3	5 – 11 V	
	4	Defective hydraulic system	If causes 1 – 3 are not detected in electrical system, hydraulic system may be defective. Carry out related troubleshooting (H mode).			

Circuit diagram related to torque converter stator clutch ECMV

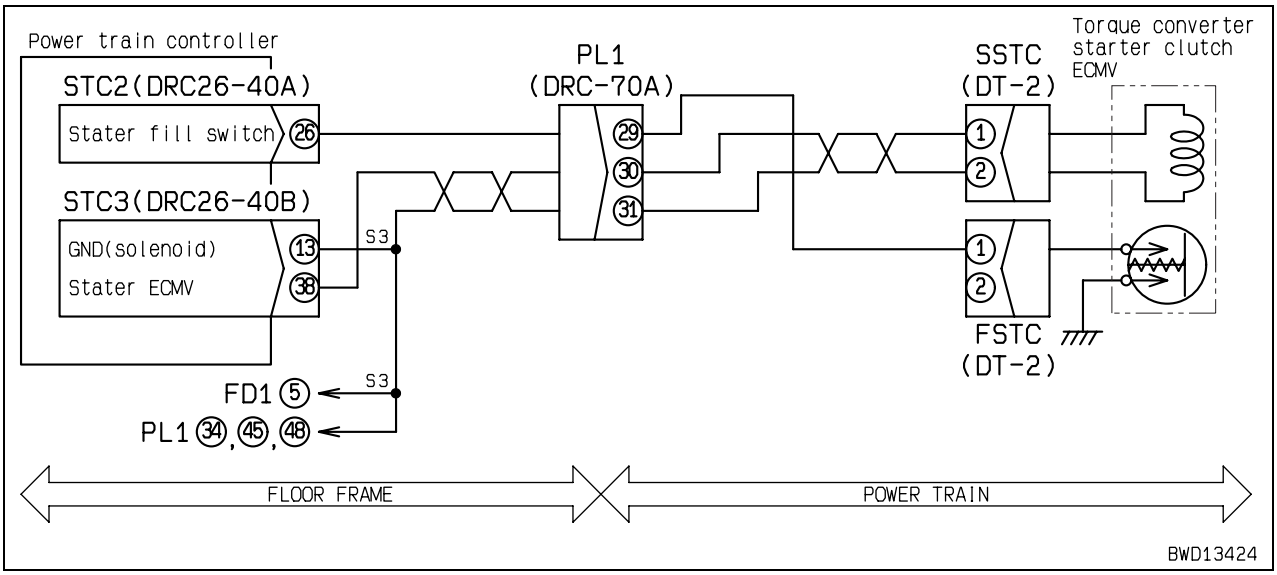

D155AX-6 Bulldozer

Form No. SEN00719-01

© 2006 KOMATSU
All Rights Reserved
Printed in Japan 05-06 (02)

BULLDOZER

D155AX-6

Machine model	Serial number
D155AX-6 upAction code	80001 and

40 Troubleshooting

Troubleshooting by failure and error codes, Part 5

Troubleshooting by failure and error codes, Part 5 3
Failure code [DFA4KX] BL lever 1: Out of normal range 3
Failure code [DFA4KZ] BL lever: Disconnection or short circuit 3
Failure code [DFA4L8] BL lever: Signal mismatch 4
Failure code [DFA5KA] BL lever 1: Disconnection 6
Failure code [DFA5KB] BL lever 1: Short circuit 8
Failure code [DFA6KA] BL lever 2: Disconnection 10
Failure code [DFA6KB] BL lever 2: Short circuit 12
Failure code [DFA7KX] BT lever 1: Out of normal range 14
Failure code [DFA7KZ] BT lever: Disconnection or short circuit 14
Failure code [DFA7L8] BT lever: Signal mismatch 15
Failure code [DFA8KA] BT lever 1: Disconnection 16
Failure code [DFA8KB] BT lever 1: Short circuit 18
Failure code [DFA9KA] BT lever 2: Disconnection 20

Failure code [DFA9KB] BT lever 2: Short circuit 22
Failure code [DFAAKX] RL lever 1: Out of normal range 24
Failure code [DFAAKZ] RL lever: Disconnection or short circuit 24
Failure code [DFAAL8] RL lever: Signal mismatch 25
Failure code [DFABKA] RL lever 1: Disconnection 26
Failure code [DFABKB] RL lever 1: Short circuit 28
Failure code [DFACKA] RL lever 2: Disconnection 30
Failure code [DFACKB] RL lever 2: Short circuit 32
Failure code [DFADKX] RL lever 1: Out of normal range 34
Failure code [DFADKZ] RL lever: Disconnection or short circuit 34
Failure code [DFADL8] RL lever: Signal mismatch 35
Failure code [DFAEKA] RL lever 1: Disconnection 36
Failure code [DFAEKB] RL lever 1: Short circuit 38
Failure code [DFAFKA] RL lever 2: Disconnection 40
Failure code [DFAFKB] RL lever 2: Short circuit 42
Failure code [DGT1KA] T/C oil temp sensor: Abnormal 44
Failure code [DGT1KX] T/C oil temp sensor: Abnormal 46
Failure code [DH21KA] Weq pressure sensor: Disconnection 48
Failure code [DH21KB] Weq pressure sensor: Short circuit 50
Failure code [DHT5KA] T/C in-pressure sensor: Disconnection 52
Failure code [DHT5KB] T/C in-pressure sensor: Short circuit 54
Failure code [DHT7KA] T/C out-pressure sensor: Disconnection 56
Failure code [DHT7KB] T/C out-pressure sensor: Short circuit 58
Failure code [DK10KX] Fuel control Dial: Out of normal range 60

Troubleshooting by failure and error codes, Part 5

Failure code [DFA4KX] BL lever 1: Out of normal range

Action code	Failure code	Trouble	BL lever 1: Out of normal range (Work equipment controller system)
E03	**DFA4KX**		
Contents of trouble	• In blade control lever lift potentiometer 1 and 2 systems, either of failure codes [**DFA5KA**] and [**DFA5KB**] and either of failure codes [**DFA6KA**] and [**DFA6KB**] occurred simultaneously.		
Action of controller	• Limits operation of engine and transmission.		
Problem that appears on machine	• Once machine is stopped, engine speed is limited to medium (half). • Once machine is stopped, travel is limited to F1 and R1.		
Related information	• State of blade control lever lift potentiometer signal can be checked with monitoring function. (Code: 73400 Blade Lift Lever A Potentio) (Code: 73401 Blade Lift Lever B Potentio) • Method of reproducing failure code: Turn starting switch ON + Operate blade control lever (in lifting direction).		

Possible causes and standard value in normal state	Cause	Standard value in normal state/Remarks on troubleshooting
	Carry out troubleshooting for failure codes [**DFA5KA**], [**DFA5KB**], [**DFA6KA**], and [**DFA6KB**].	

Failure code [DFA4KZ] BL lever: Disconnection or short circuit

Action code	Failure code	Trouble	BL lever: Disconnection or short circuit (Work equipment controller system)
E03	**DFA4KZ**		
Contents of trouble	• In blade control lever lift potentiometer 1 and 2 systems, when starting switch is turned ON, only either side is abnormal and then either of failure codes [**DFA5KA**] and [**DFA5KB**] and either of failure codes [**DFA6KA**] and [**DFA6KB**] occurred simultaneously.		
Action of controller	• Limits operation of engine and transmission.		
Problem that appears on machine	• Once machine is stopped, engine speed is limited to medium (half). • Once machine is stopped, travel is limited to F1 and R1.		
Related information	• State of blade control lever lift potentiometer signal can be checked with monitoring function. (Code: 73400 Blade Lift Lever A Potentio) (Code: 73401 Blade Lift Lever B Potentio) • Method of reproducing failure code: Turn starting switch ON + Operate blade control lever (in lifting direction).		

Possible causes and standard value in normal state	Cause	Standard value in normal state/Remarks on troubleshooting
	Carry out troubleshooting for failure codes [**DFA5KA**], [**DFA5KB**], [**DFA6KA**], and [**DFA6KB**].	

Failure code [DFA4L8] BL lever: Signal mismatch

Action code	Failure code	Trouble	BL lever: Signal mismatch (Work equipment controller system)
E03	**DFA4L8**		
Contents of trouble	• In blade control lever lift potentiometer 1 and 2 systems, total of both signal voltages is below 4.41 V or above 5.59 V.		
Action of controller	• Continues control with signal of normal one of blade control lever lift potentiometer 1 and 2 systems. • Limits operation of engine and transmission.		
Problem that appears on machine	• Once machine is stopped, engine speed is limited to medium (half). • Once machine is stopped, travel is limited to F1 and R1.		
Related information	• State of blade control lever lift potentiometer signal can be checked with monitoring function. (Code: 73400 Blade Lift Lever A Potentio) (Code: 73401 Blade Lift Lever B Potentio) • Method of reproducing failure code: Turn starting switch ON + Operate blade control lever (in lifting direction).		

Possible causes and standard value in normal state	Cause	Standard value in normal state/Remarks on troubleshooting
	Carry out troubleshooting for failure codes [**DFA5KA**], [**DFA5KB**], [**DFA6KA**], and [**DFA6KB**].	

Failure code [DFA5KA] BL lever 1: Disconnection

Action code	Failure code	Trouble	BL lever 1: Disconnection (Work equipment controller system)
E03	**DFA5KA**		
Contents of trouble	• Signal voltage of blade control lever lift potentiometer 1 system is below 0.5 V.		
Action of controller	• Continues control with signal of blade control lever lift potentiometer 2 system. • Limits operation of engine and transmission.		
Problem that appears on machine	• Once machine is stopped, engine speed is limited to medium (half). • Once machine is stopped, travel is limited to F1 and R1.		
Related information	• State of blade control lever lift potentiometer 1 signal can be checked with monitoring function. (Code: 73400 Blade Lift Lever A Potentio) • Method of reproducing failure code: Turn starting switch ON + Operate blade control lever (in lifting direction).		

	Cause		Standard value in normal state/Remarks on troubleshooting			
Possible causes and standard value in normal state	1	Defective sensor 5V power supply system	If failure code [**DB97KK**] is also displayed, carry out troubleshooting for it first.			
	2	Defective blade control lever lift potentiometer 1 (Internal disconnection)	★ Prepare with starting switch OFF, then carry out troubleshooting without turning starting switch ON.			
			WLV1 (male)	Blade control lever	Resistance	
			Between (4) – (1)	Neutral	3.2 kΩ ± 20 %	
			Between (4) – (3)		1.6 kΩ ± 20 %	
			Between (3) – (1)		1.6 kΩ ± 20 %	
	3	Disconnection in wiring harness (Disconnection in wiring or defective contact in connector)	★ Prepare with starting switch OFF, then carry out troubleshooting without turning starting switch ON.			
			Wiring harness between WEC1 (female) (22) – WLV1 (female) (4)		Resistance	Max. 1 Ω
			Wiring harness between WEC1 (female) (2) – WLV1 (female) (3)		Resistance	Max. 1 Ω
	4	Ground fault in wiring harness (Contact with GND circuit)	★ Prepare with starting switch OFF, then carry out troubleshooting without turning starting switch ON.			
			Wiring harness between WEC1 (female) (2) – WLV1 (female) (3) and chassis ground		Resistance	Min. 1 MΩ
	5	Defective work equipment controller	★ Prepare with starting switch OFF, then turn starting switch ON and carry out troubleshooting.			
			WEC1		Voltage	
			Between (2) – (21)		0.5 – 4.5 V	

Circuit diagram related to blade control lever potentiometer

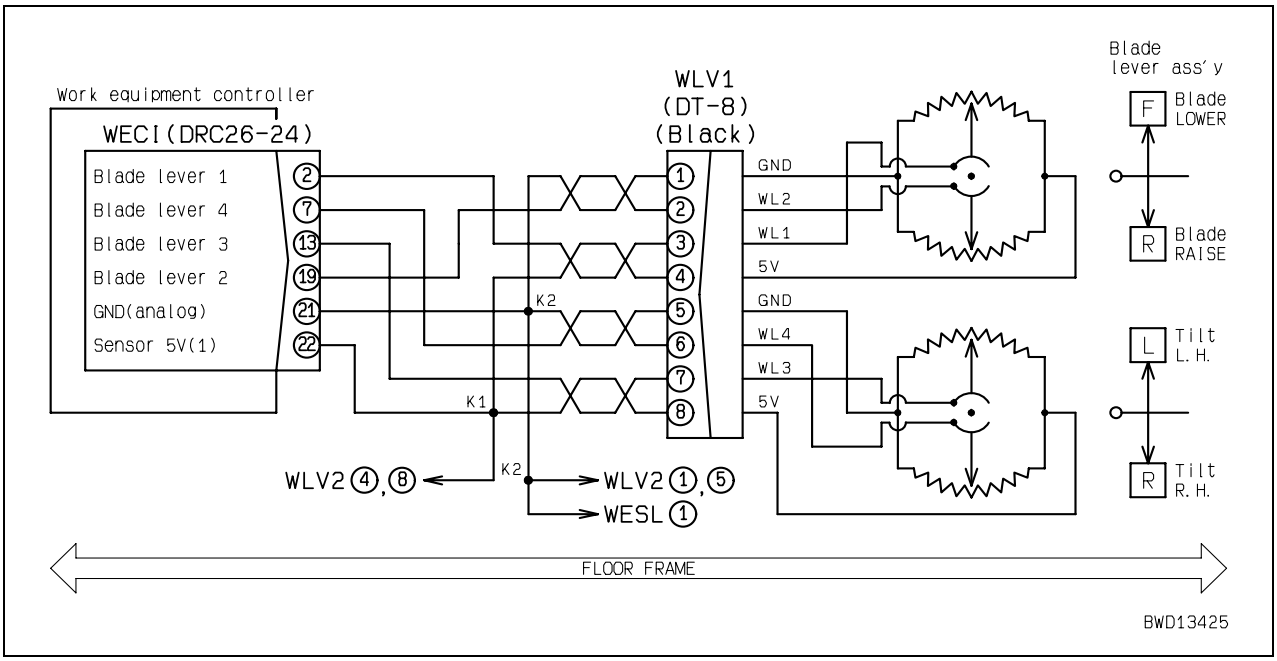

Failure code [DFA5KB] BL lever 1: Short circuit

Action code	Failure code	Trouble	BL lever 1: Short circuit (Work equipment controller system)
E03	**DFA5KB**		
Contents of trouble	• Signal voltage of blade control lever lift potentiometer 1 system is above 4.5 V.		
Action of controller	• Continues control with signal of blade control lever lift potentiometer 2 system. • Limits operation of engine and transmission.		
Problem that appears on machine	• Once machine is stopped, engine speed is limited to medium (half). • Once machine is stopped, travel is limited to F1 and R1.		
Related information	• State of blade control lever lift potentiometer 1 signal can be checked with monitoring function. (Code: 73400 Blade Lift Lever A Potentio) • Method of reproducing failure code: Turn starting switch ON + Operate blade control lever (in lifting direction).		

	Cause		Standard value in normal state/Remarks on troubleshooting			
Possible causes and standard value in normal state	1	Defective sensor 5V power supply system	If failure code [**DB97KK**] is also displayed, carry out troubleshooting for it first.			
	2	Defective blade control lever lift potentiometer 1 (Internal short circuit)	★ Prepare with starting switch OFF, then carry out troubleshooting without turning starting switch ON.			
			WLV1 (male)	Blade control lever	Resistance	
			Between (4) – (1)	Neutral	3.2 kΩ ± 20 %	
			Between (4) – (3)		1.6 kΩ ± 20 %	
			Between (3) – (1)		1.6 kΩ ± 20 %	
	3	Hot short (Short circuit with 24V circuit) in wiring harness	★ Prepare with starting switch OFF, then turn starting switch ON and carry out troubleshooting.			
			Wiring harness between WEC1 (female) (2) – WLV1 (female) (3) and chassis ground		Voltage	Max. 1 V
	4	Defective work equipment controller	★ Prepare with starting switch OFF, then turn starting switch ON and carry out troubleshooting.			
			WEC1		Voltage	
			Between (2) – (21)		0.5 – 4.5 V	

Circuit diagram related to blade control lever potentiometer

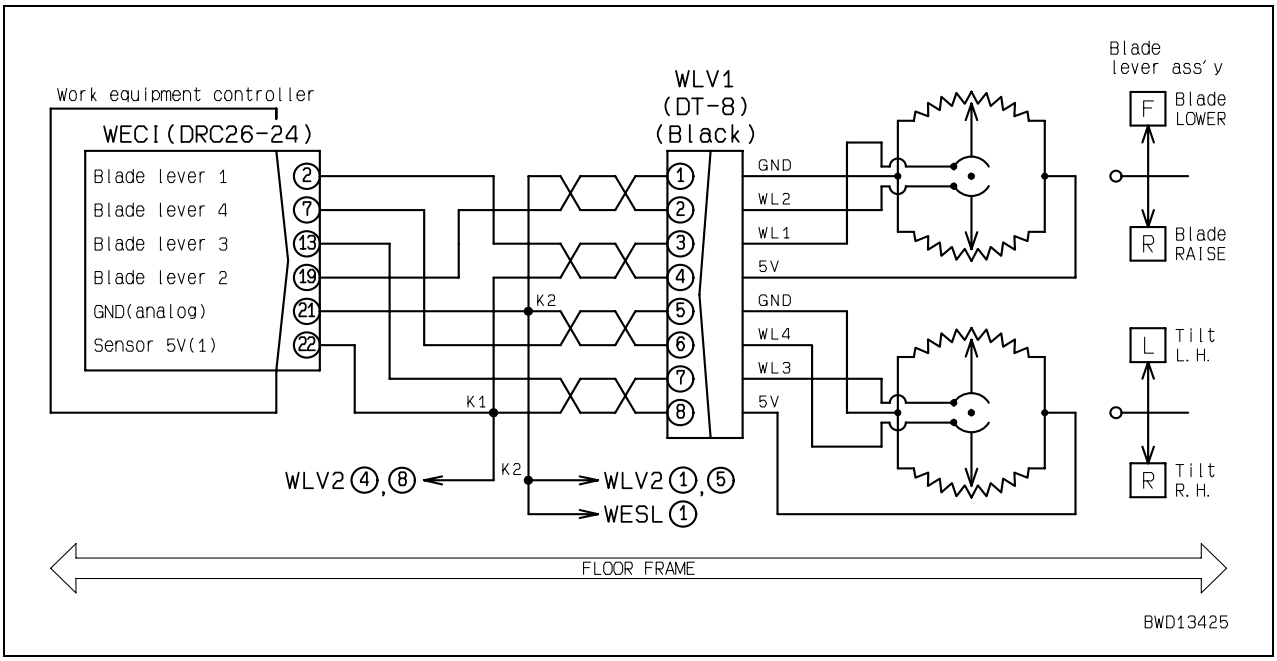

Failure code [DFA6KA] BL lever 2: Disconnection

Action code	Failure code	Trouble	BL lever 2: Disconnection (Work equipment controller system)
E03	**DFA6KA**		
Contents of trouble	• Signal voltage of blade control lever lift potentiometer 2 system is below 0.5 V.		
Action of controller	• Continues control with signal of blade control lever lift potentiometer 1 system. • Limits operation of engine and transmission.		
Problem that appears on machine	• Once machine is stopped, engine speed is limited to medium (half). • Once machine is stopped, travel is limited to F1 and R1.		
Related information	• State of blade control lever lift potentiometer 2 signal can be checked with monitoring function. (Code: 73401 Blade Lift Lever B Potentio) • Method of reproducing failure code: Turn starting switch ON + Operate blade control lever (in lifting direction).		

	Cause		Standard value in normal state/Remarks on troubleshooting			
Possible causes and standard value in normal state	1	Defective sensor 5V power supply system	If failure code [**DB97KK**] is also displayed, carry out troubleshooting for it first.			
	2	Defective blade control lever lift potentiometer 2 (Internal disconnection)	★ Prepare with starting switch OFF, then carry out troubleshooting without turning starting switch ON.			
			WLV1 (male)	Blade control lever	Resistance	
			Between (4) – (1)	Neutral	3.2 kΩ ± 20 %	
			Between (4) – (2)		1.6 kΩ ± 20 %	
			Between (2) – (1)		1.6 kΩ ± 20 %	
	3	Disconnection in wiring harness (Disconnection in wiring or defective contact in connector)	★ Prepare with starting switch OFF, then carry out troubleshooting without turning starting switch ON.			
			Wiring harness between WEC1 (female) (22) – WLV1 (female) (4)		Resistance	Max. 1 Ω
			Wiring harness between WEC1 (female) (19) – WLV1 (female) (2)		Resistance	Max. 1 Ω
	4	Ground fault in wiring harness (Contact with GND circuit)	★ Prepare with starting switch OFF, then carry out troubleshooting without turning starting switch ON.			
			Wiring harness between WEC1 (female) (19) – WLV1 (female) (2) and chassis ground		Resistance	Min. 1 MΩ
	5	Defective work equipment controller	★ Prepare with starting switch OFF, then turn starting switch ON and carry out troubleshooting.			
			WEC1		Voltage	
			Between (19) – (21)		0.5 – 4.5 V	

Circuit diagram related to blade control lever potentiometer

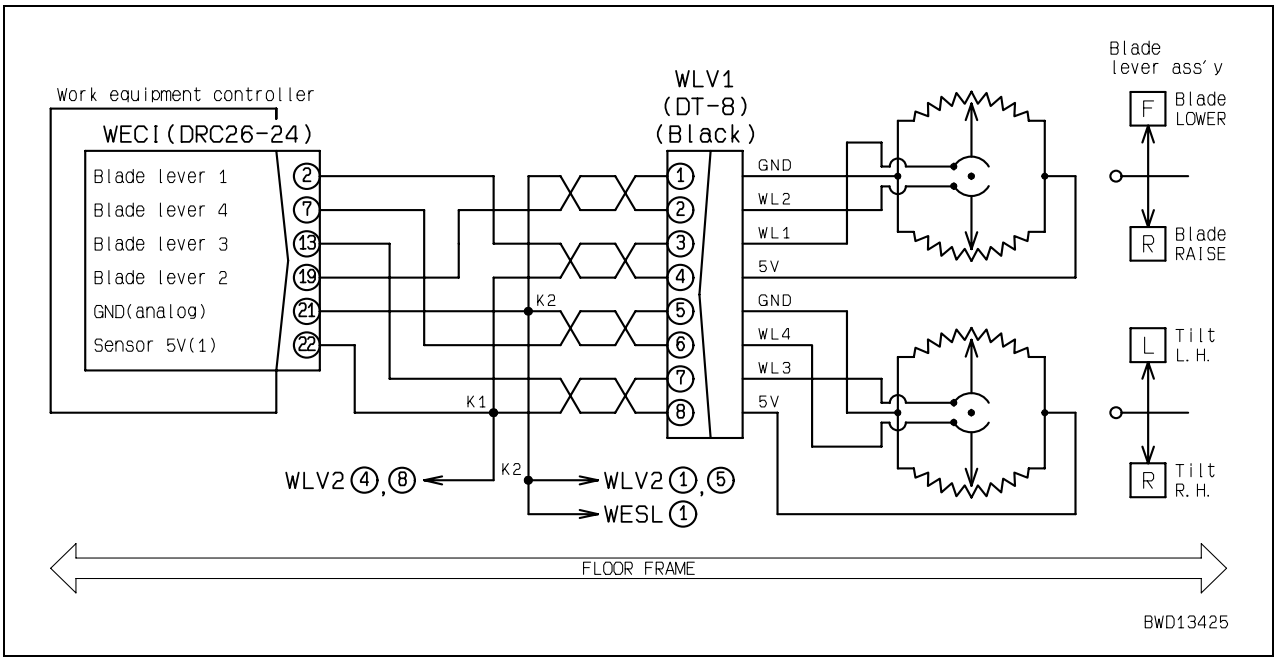

Failure code [DFA6KB] BL lever 2: Short circuit

Action code	Failure code	Trouble	BL lever 2: Short circuit (Work equipment controller system)
E03	**DFA6KB**		
Contents of trouble	• Signal voltage of blade control lever lift potentiometer 2 system is above 4.5 V.		
Action of controller	• Continues control with signal of blade control lever lift potentiometer 1 system. • Limits operation of engine and transmission.		
Problem that appears on machine	• Once machine is stopped, engine speed is limited to medium (half). • Once machine is stopped, travel is limited to F1 and R1.		
Related information	• State of blade control lever lift potentiometer 2 signal can be checked with monitoring function. (Code: 73401 Blade Lift Lever B Potentio) • Method of reproducing failure code: Turn starting switch ON + Operate blade control lever (in lifting direction).		

	Cause		Standard value in normal state/Remarks on troubleshooting			
Possible causes and standard value in normal state	1	Defective sensor 5V power supply system	If failure code [**DB97KK**] is also displayed, carry out troubleshooting for it first.			
	2	Defective blade control lever lift potentiometer 2 (Internal short circuit)	★ Prepare with starting switch OFF, then carry out troubleshooting without turning starting switch ON.			
			WLV1 (male)	Blade control lever	Resistance	
			Between (4) – (1)	Neutral	3.2 kΩ ± 20 %	
			Between (4) – (2)		1.6 kΩ ± 20 %	
			Between (2) – (1)		1.6 kΩ ± 20 %	
	3	Hot short (Short circuit with 24V circuit) in wiring harness	★ Prepare with starting switch OFF, then turn starting switch ON and carry out troubleshooting.			
			Wiring harness between WEC1 (female) (19) – WLV1 (female) (2) and chassis ground		Voltage	Max. 1 V
	4	Defective work equipment controller	★ Prepare with starting switch OFF, then turn starting switch ON and carry out troubleshooting.			
			WEC1		Voltage	
			Between (19) – (21)		0.5 – 4.5 V	

Circuit diagram related to blade control lever potentiometer

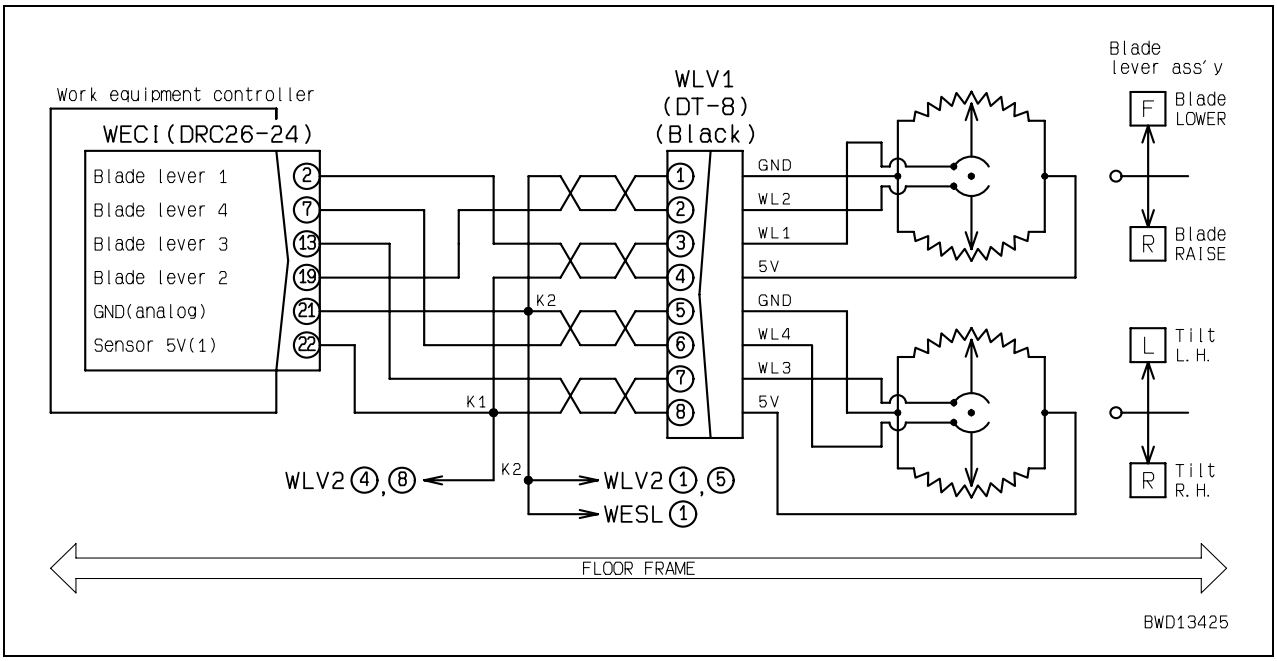

Failure code [DFA7KX] BT lever 1: Out of normal range

Action code	Failure code	Trouble	BT lever 1: Out of normal range (Work equipment controller system)
E03	**DFA7KX**		
Contents of trouble	• In blade control lever tilt potentiometer 1 and 2 systems, either of failure codes [**DFA8KA**] and [**DFA8KB**] and either of failure codes [**DFA9KA**] and [**DFA9KB**] occurred simultaneously.		
Action of controller	• Limits operation of engine and transmission.		
Problem that appears on machine	• Once machine is stopped, engine speed is limited to medium (half). • Once machine is stopped, travel is limited to F1 and R1.		
Related information	• State of blade control lever tilt potentiometer signal can be checked with monitoring function. (Code: 73500 Blade Tilt Lever A Potentio) (Code: 73501 Blade Tilt Lever B Potentio) • Method of reproducing failure code: Turn starting switch ON + Operate blade control lever (in tilting direction).		

Possible causes and standard value in normal state	Cause	Standard value in normal state/Remarks on troubleshooting
	Carry out troubleshooting for failure codes [**DFA8KA**], [**DFA8KB**], [**DFA9KA**], and [**DFA9KB**].	

Failure code [DFA7KZ] BT lever: Disconnection or short circuit

Action code	Failure code	Trouble	BT lever: Disconnection or short circuit (Work equipment controller system)
E03	**DFA7KZ**		
Contents of trouble	• In blade control lever tilt potentiometer 1 and 2 systems, when starting switch is turned ON, only either side is abnormal and then either of failure codes [**DFA8KA**] and [**DFA8KB**] and either of failure codes [**DFA9KA**] and [**DFA9KB**] occurred simultaneously.		
Action of controller	• Limits operation of engine and transmission.		
Problem that appears on machine	• Once machine is stopped, engine speed is limited to medium (half). • Once machine is stopped, travel is limited to F1 and R1.		
Related information	• State of blade control lever tilt potentiometer signal can be checked with monitoring function. (Code: 73500 Blade Tilt Lever A Potentio) (Code: 73501 Blade Tilt Lever B Potentio) • Method of reproducing failure code: Turn starting switch ON + Operate blade control lever (in tilting direction).		

Possible causes and standard value in normal state	Cause	Standard value in normal state/Remarks on troubleshooting
	Carry out troubleshooting for failure codes [**DFA8KA**], [**DFA8KB**], [**DFA9KA**], and [**DFA9KB**].	

Failure code [DFA7L8] BT lever: Signal mismatch

Action code	Failure code	Trouble	BT lever: Signal mismatch (Work equipment controller system)
E03	**DFA7L8**		
Contents of trouble	• In blade control lever tilt potentiometer 1 and 2 systems, total of both signal voltages is below 4.41 V or above 5.59 V.		
Action of controller	• Continues control with signal of normal one of blade control lever tilt potentiometer 1 and 2 systems. • Limits operation of engine and transmission.		
Problem that appears on machine	• Once machine is stopped, engine speed is limited to medium (half). • Once machine is stopped, travel is limited to F1 and R1.		
Related information	• State of blade control lever tilt potentiometer signal can be checked with monitoring function. (Code: 73500 Blade Tilt Lever A Potentio) (Code: 73501 Blade Tilt Lever B Potentio) • Method of reproducing failure code: Turn starting switch ON + Operate blade control lever (in tilting direction).		

Possible causes and standard value in normal state	Cause	Standard value in normal state/Remarks on troubleshooting
	Carry out troubleshooting for failure codes [**DFA8KA**], [**DFA8KB**], [**DFA9KA**], and [**DFA9KB**].	

Failure code [DFA8KA] BT lever 1: Disconnection

Action code	Failure code	Trouble	BT lever 1: Disconnection (Work equipment controller system)
E03	**DFA8KA**		
Contents of trouble	• Signal voltage of blade control lever tilt potentiometer 1 system is below 0.5 V.		
Action of controller	• Continues control with signal of blade control lever tilt potentiometer 2 system. • Limits operation of engine and transmission		
Problem that appears on machine	• Once machine is stopped, engine speed is limited to medium (half). • Once machine is stopped, travel is limited to F1 and R1.		
Related information	• State of blade control lever tilt potentiometer 1 signal can be checked with monitoring function. (Code: 73500 Blade Tilt Lever A Potentio) • Method of reproducing failure code: Turn starting switch ON + Operate blade control lever (in tilting direction).		

	Cause		Standard value in normal state/Remarks on troubleshooting			
Possible causes and standard value in normal state	1	Defective sensor 5V power supply system	If failure code [**DB97KK**] is also displayed, carry out troubleshooting for it first.			
	2	Defective blade control lever tilt potentiometer 1 (Internal disconnection)	★ Prepare with starting switch OFF, then carry out troubleshooting without turning starting switch ON.			
			WLV1 (male)	Blade control lever	Resistance	
			Between (8) – (5)	Neutral	3.2 kΩ ± 20 %	
			Between (8) – (7)		1.6 kΩ ± 20 %	
			Between (7) – (5)		1.6 kΩ ± 20 %	
	3	Disconnection in wiring harness (Disconnection in wiring or defective contact in connector)	★ Prepare with starting switch OFF, then carry out troubleshooting without turning starting switch ON.			
			Wiring harness between WEC1 (female) (22) – WLV1 (female) (8)		Resistance	Max. 1 Ω
			Wiring harness between WEC1 (female) (13) – WLV1 (female) (7)		Resistance	Max. 1 Ω
	4	Ground fault in wiring harness (Contact with GND circuit)	★ Prepare with starting switch OFF, then carry out troubleshooting without turning starting switch ON.			
			Wiring harness between WEC1 (female) (13) – WLV1 (female) (7) and chassis ground		Resistance	Min. 1 MΩ
	5	Defective work equipment controller	★ Prepare with starting switch OFF, then turn starting switch ON and carry out troubleshooting.			
			WEC1		Voltage	
			Between (13) – (21)		0.5 – 4.5 V	

Circuit diagram related to blade control lever potentiometer

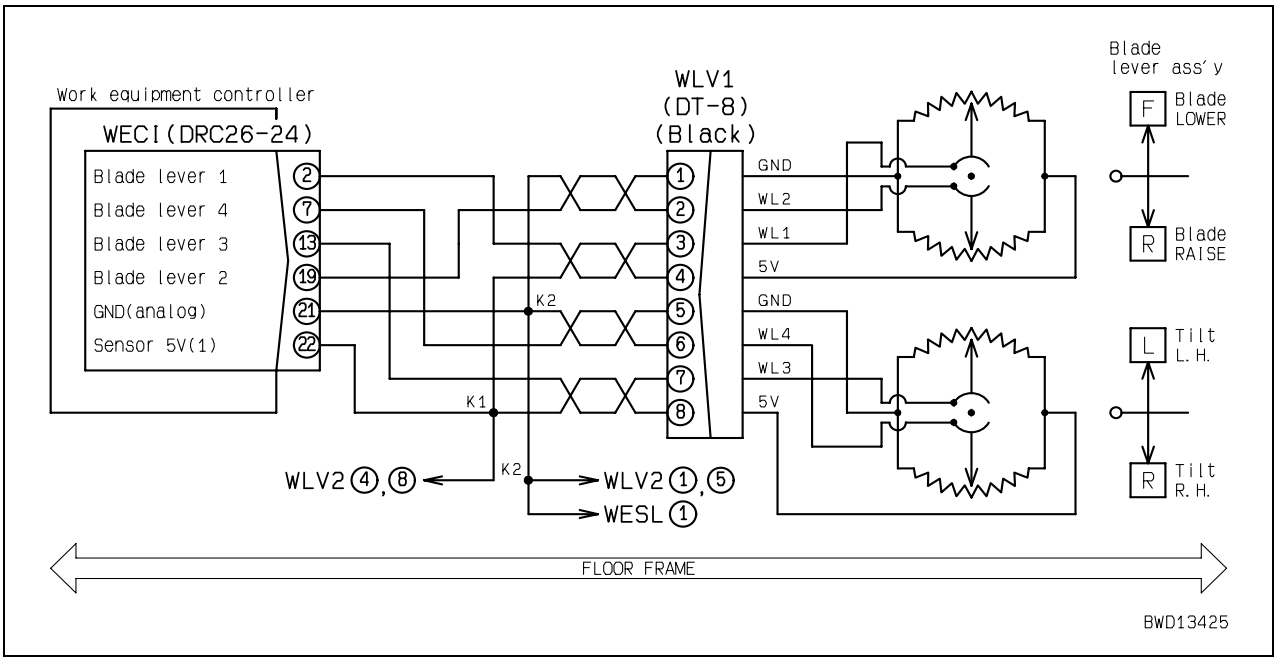

Failure code [DFA8KB] BT lever 1: Short circuit

Action code	Failure code	Trouble	BT lever 1: Short circuit (Work equipment controller system)
E03	**DFA8KB**		
Contents of trouble	• Signal voltage of blade control lever tilt potentiometer 1 system is above 4.5 V.		
Action of controller	• Continues control with signal of blade control lever tilt potentiometer 2 system. • Limits operation of engine and transmission.		
Problem that appears on machine	• Once machine is stopped, engine speed is limited to medium (half). • Once machine is stopped, travel is limited to F1 and R1.		
Related information	• State of blade control lever tilt potentiometer 1 signal can be checked with monitoring function. (Code: 73500 Blade Tilt Lever A Potentio) • Method of reproducing failure code: Turn starting switch ON + Operate blade control lever (in tilting direction).		

<table>
<tr><td rowspan="14">Possible causes and standard value in normal state</td><td colspan="2">Cause</td><td colspan="4">Standard value in normal state/Remarks on troubleshooting</td></tr>
<tr><td>1</td><td>Defective sensor 5V power supply system</td><td colspan="4">If failure code [DB97KK] is also displayed, carry out troubleshooting for it first.</td></tr>
<tr><td rowspan="5">2</td><td rowspan="5">Defective blade control lever tilt potentiometer 1 (Internal short circuit)</td><td colspan="4">★ Prepare with starting switch OFF, then carry out troubleshooting without turning starting switch ON.</td></tr>
<tr><td>WLV1 (male)</td><td>Blade control lever</td><td colspan="2">Resistance</td></tr>
<tr><td>Between (8) – (5)</td><td rowspan="3">Neutral</td><td colspan="2">3.2 kΩ ± 20 %</td></tr>
<tr><td>Between (8) – (7)</td><td colspan="2">1.6 kΩ ± 20 %</td></tr>
<tr><td>Between (7) – (5)</td><td colspan="2">1.6 kΩ ± 20 %</td></tr>
<tr><td rowspan="3">3</td><td rowspan="3">Hot short (Short circuit with 24V circuit) in wiring harness</td><td colspan="4">★ Prepare with starting switch OFF, then turn starting switch ON and carry out troubleshooting.</td></tr>
<tr><td colspan="2">Wiring harness between WEC1 (female) (13) – WLV1 (female) (7) and chassis ground</td><td>Voltage</td><td>Max. 1 V</td></tr>
<tr><td rowspan="3">4</td><td rowspan="3">Defective work equipment controller</td><td colspan="4">★ Prepare with starting switch OFF, then turn starting switch ON and carry out troubleshooting.</td></tr>
<tr><td colspan="2">WEC1</td><td colspan="2">Voltage</td></tr>
<tr><td colspan="2">Between (13) – (21)</td><td colspan="2">0.5 – 4.5 V</td></tr>
</table>

Circuit diagram related to blade control lever potentiometer

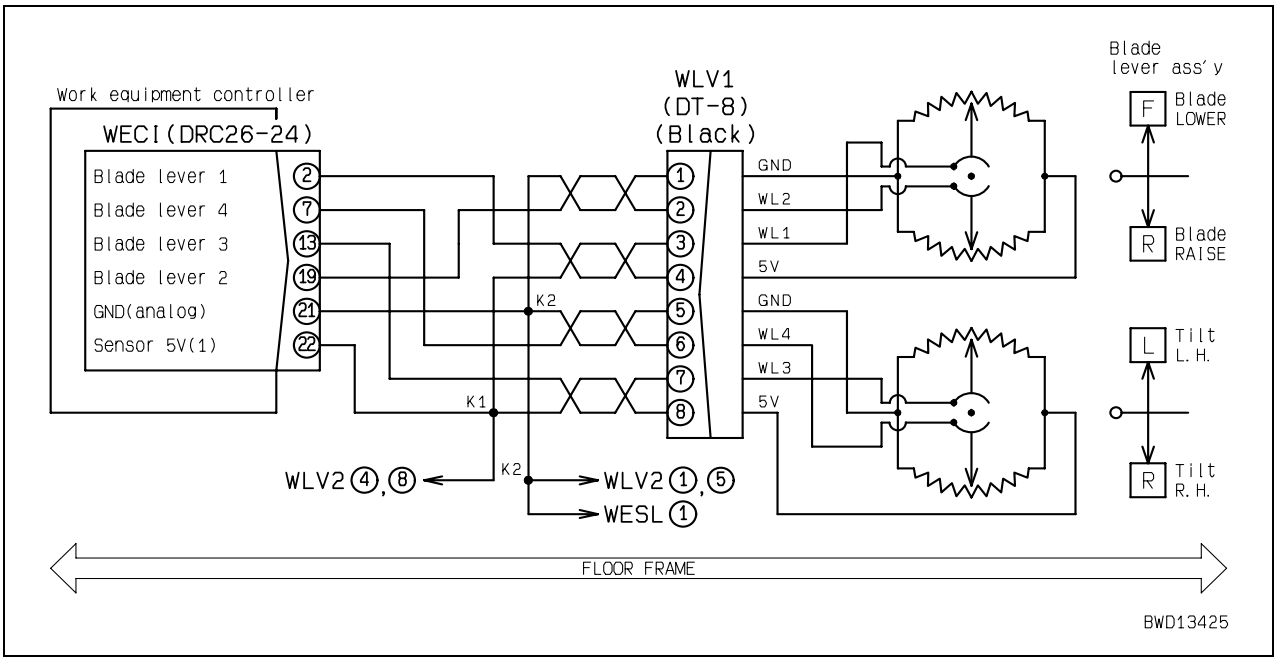

Failure code [DFA9KA] BT lever 2: Disconnection

Action code	Failure code	Trouble	BT lever 2: Disconnection (Work equipment controller system)
E03	**DFA9KA**		
Contents of trouble	• Signal voltage of blade control lever tilt potentiometer 2 system is below 0.5 V.		
Action of controller	• Continues control with signal of blade control lever tilt potentiometer 1 system. • Limits operation of engine and transmission.		
Problem that appears on machine	• Once machine is stopped, engine speed is limited to medium (half). • Once machine is stopped, travel is limited to F1 and R1.		
Related information	• State of blade control lever tilt potentiometer 2 signal can be checked with monitoring function. (Code: 73501 Blade Tilt Lever B Potentio) • Method of reproducing failure code: Turn starting switch ON + Operate blade control lever (in tilting direction).		

	Cause		Standard value in normal state/Remarks on troubleshooting			
Possible causes and standard value in normal state	1	Defective sensor 5V power supply system	If failure code [**DB97KK**] is also displayed, carry out troubleshooting for it first.			
	2	Defective blade control lever tilt potentiometer 2 (Internal disconnection)	★ Prepare with starting switch OFF, then carry out troubleshooting without turning starting switch ON.			
			WLV1 (male)	Blade control lever	Resistance	
			Between (8) – (5)	Neutral	3.2 kΩ ± 20 %	
			Between (8) – (6)		1.6 kΩ ± 20 %	
			Between (6) – (5)		1.6 kΩ ± 20 %	
	3	Disconnection in wiring harness (Disconnection in wiring or defective contact in connector)	★ Prepare with starting switch OFF, then carry out troubleshooting without turning starting switch ON.			
			Wiring harness between WEC1 (female) (22) – WLV1 (female) (8)		Resistance	Max. 1 Ω
			Wiring harness between WEC1 (female) (7) – WLV1 (female) (6)		Resistance	Max. 1 Ω
	4	Ground fault in wiring harness (Contact with GND circuit)	★ Prepare with starting switch OFF, then carry out troubleshooting without turning starting switch ON.			
			Wiring harness between WEC1 (female) (7) – WLV1 (female) (6) and chassis ground		Resistance	Min. 1 MΩ
	5	Defective work equipment controller	★ Prepare with starting switch OFF, then turn starting switch ON and carry out troubleshooting.			
			WEC1		Voltage	
			Between (7) – (21)		0.5 – 4.5 V	

Circuit diagram related to blade control lever potentiometer

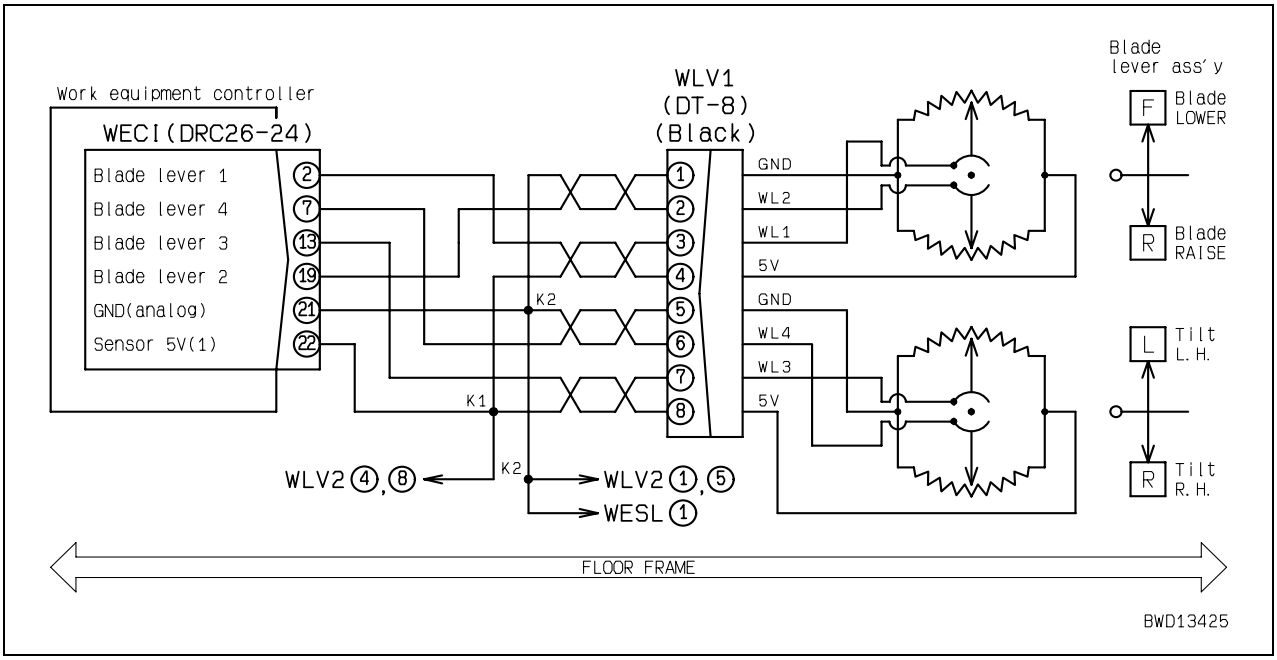

Failure code [DFA9KB] BT lever 2: Short circuit

Action code	Failure code	Trouble	BT lever 2: Short circuit (Work equipment controller system)
E03	**DFA9KB**		
Contents of trouble	• Signal voltage of blade control lever tilt potentiometer 2 system is above 4.5 V.		
Action of controller	• Continues control with signal of blade control lever tilt potentiometer 1 system. • Limits operation of engine and transmission.		
Problem that appears on machine	• Once machine is stopped, engine speed is limited to medium (half). • Once machine is stopped, travel is limited to F1 and R1.		
Related information	• State of blade control lever tilt potentiometer 2 signal can be checked with monitoring function. (Code: 73501 Blade Tilt Lever B Potentio) • Method of reproducing failure code: Turn starting switch ON + Operate blade control lever (in tilting direction).		

	Cause		Standard value in normal state/Remarks on troubleshooting			
Possible causes and standard value in normal state	1	Defective sensor 5V power supply system	If failure code [**DB97KK**] is also displayed, carry out troubleshooting for it first.			
	2	Defective blade control lever tilt potentiometer 2 (Internal short circuit)	★ Prepare with starting switch OFF, then carry out troubleshooting without turning starting switch ON.			
			WLV1 (male)	Blade control lever	Resistance	
			Between (8) – (5)	Neutral	3.2 kΩ ± 20 %	
			Between (8) – (6)		1.6 kΩ ± 20 %	
			Between (6) – (5)		1.6 kΩ ± 20 %	
	3	Hot short (Short circuit with 24V circuit) in wiring harness	★ Prepare with starting switch OFF, then turn starting switch ON and carry out troubleshooting.			
			Wiring harness between WEC1 (female) (7) – WLV1 (female) (6) and chassis ground		Voltage	Max. 1 V
	4	Defective work equipment controller	★ Prepare with starting switch OFF, then turn starting switch ON and carry out troubleshooting.			
			WEC1		Voltage	
			Between (7) – (21)		0.5 – 4.5 V	

Circuit diagram related to blade control lever potentiometer

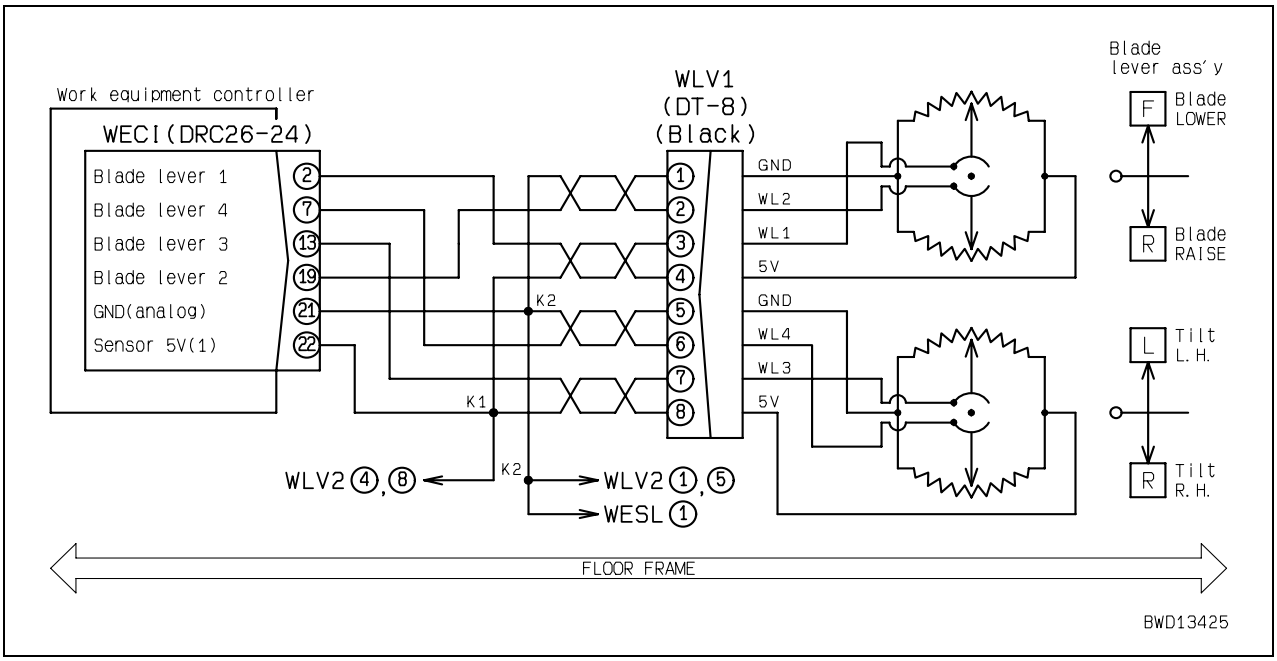

Failure code [DFAAKX] RL lever 1: Out of normal range

Action code	Failure code	Trouble	RL lever 1: Out of normal range (Work equipment controller system)
E03	**DFAAKX**		
Contents of trouble	• In ripper control lever lift potentiometer 1 and 2 systems, either of failure codes [**DFABKA**] and [**DFABKB**] and either of failure codes [**DFACKA**] and [**DFACKB**] occurred simultaneously.		
Action of controller	• Limits operation of engine and transmission.		
Problem that appears on machine	• Once machine is stopped, engine speed is limited to medium (half). • Once machine is stopped, travel is limited to F1 and R1.		
Related information	• State of ripper control lever lift potentiometer signal can be checked with monitoring function. (Code: 73700 Ripper Lift Lever A Potentio) (Code: 73701 Ripper Lift Lever B Potentio) • Method of reproducing failure code: Turn starting switch ON + Operate ripper control lever (in lifting direction).		

Possible causes and standard value in normal state	Cause	Standard value in normal state/Remarks on troubleshooting
	Carry out troubleshooting for failure codes [**DFABKA**], [**DFABKB**], [**DFACKA**], and [**DFACKB**].	

Failure code [DFAAKZ] RL lever: Disconnection or short circuit

Action code	Failure code	Trouble	RL lever: Disconnection or short circuit (Work equipment controller system)
E03	**DFAAKZ**		
Contents of trouble	• In ripper control lever lift potentiometer 1 and 2 systems, when starting switch is turned ON, only either side is abnormal and then either of failure codes [**DFABKA**] and [**DFABKB**] and either of failure codes [**DFACKA**] and [**DFACKB**] occurred simultaneously.		
Action of controller	• Limits operation of engine and transmission.		
Problem that appears on machine	• Once machine is stopped, engine speed is limited to medium (half). • Once machine is stopped, travel is limited to F1 and R1.		
Related information	• State of ripper control lever lift potentiometer signal can be checked with monitoring function. (Code: 73700 Ripper Lift Lever A Potentio) (Code: 73701 Ripper Lift Lever B Potentio) • Method of reproducing failure code: Turn starting switch ON + Operate ripper control lever (in lifting direction).		

Possible causes and standard value in normal state	Cause	Standard value in normal state/Remarks on troubleshooting
	Carry out troubleshooting for failure codes [**DFABKA**], [**DFABKB**], [**DFACKA**], and [**DFACKB**].	

Failure code [DFAAL8] RL lever: Signal mismatch

Action code	Failure code	Trouble	RL lever: Signal mismatch (Work equipment controller system)
E03	**DFAAL8**		
Contents of trouble	• In ripper control lever lift potentiometer 1 and 2 systems, total of both signal voltages is below 4.41 V or above 5.59 V.		
Action of controller	• Continues control with signal of normal one of ripper control lever lift potentiometer 1 and 2 systems. • Limits operation of engine and transmission.		
Problem that appears on machine	• Once machine is stopped, engine speed is limited to medium (half). • Once machine is stopped, travel is limited to F1 and R1.		
Related information	• State of ripper control lever lift potentiometer signal can be checked with monitoring function. (Code: 73700 Ripper Lift Lever A Potentio) (Code: 73701 Ripper Lift Lever B Potentio) • Method of reproducing failure code: Turn starting switch ON + Operate ripper control lever (in lifting direction).		

Possible causes and standard value in normal state	Cause	Standard value in normal state/Remarks on troubleshooting
	Carry out troubleshooting for failure codes [**DFABKA**], [**DFABKB**], [**DFACKA**], and [**DFACKB**].	

Failure code [DFABKA] RL lever 1: Disconnection

Action code	Failure code	Trouble	RL lever 1: Disconnection (Work equipment controller system)
E03	**DFABKA**		
Contents of trouble	• Signal voltage of ripper control lever lift potentiometer 1 system is below 0.5 V.		
Action of controller	• Continues control with signal of ripper control lever lift potentiometer 2 system. • Limits operation of engine and transmission.		
Problem that appears on machine	• Once machine is stopped, engine speed is limited to medium (half). • Once machine is stopped, travel is limited to F1 and R1.		
Related information	• State of ripper control lever lift potentiometer 1 signal can be checked with monitoring function. (Code: 73700 Ripper Lift Lever A Potentio) • Method of reproducing failure code: Turn starting switch ON + Operate ripper control lever (in lifting direction).		

	Cause		Standard value in normal state/Remarks on troubleshooting			
Possible causes and standard value in normal state	1	Defective sensor 5V power supply system	If failure code [**DB97KK**] is also displayed, carry out troubleshooting for it first.			
	2	Defective ripper control lever lift potentiometer 1 (Internal disconnection)	★ Prepare with starting switch OFF, then carry out troubleshooting without turning starting switch ON.			
			WLV2 (male)	Ripper control lever	Resistance	
			Between (8) – (5)	Neutral	3.2 kΩ ± 20 %	
			Between (8) – (7)		1.6 kΩ ± 20 %	
			Between (7) – (5)		1.6 kΩ ± 20 %	
	3	Disconnection in wiring harness (Disconnection in wiring or defective contact in connector)	★ Prepare with starting switch OFF, then carry out troubleshooting without turning starting switch ON.			
			Wiring harness between WEC1 (female) (22) – WLV2 (female) (8)		Resistance	Max. 1 Ω
			Wiring harness between WEC1 (female) (14) – WLV2 (female) (7)		Resistance	Max. 1 Ω
	4	Ground fault in wiring harness (Contact with GND circuit)	★ Prepare with starting switch OFF, then carry out troubleshooting without turning starting switch ON.			
			Wiring harness between WEC1 (female) (14) – WLV2 (female) (7) and chassis ground		Resistance	Min. 1 MΩ
	5	Defective work equipment controller	★ Prepare with starting switch OFF, then turn starting switch ON and carry out troubleshooting.			
			WEC1		Voltage	
			Between (14) – (21)		0.5 – 4.5 V	

Circuit diagram related to ripper control lever potentiometer

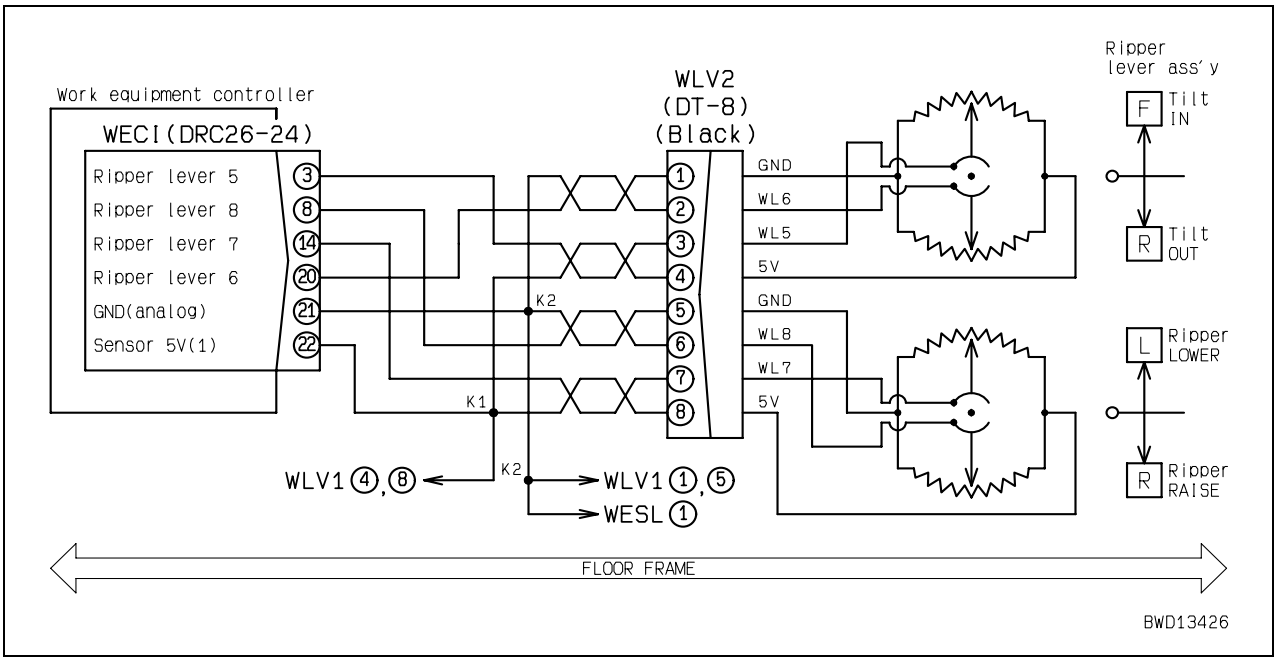

Failure code [DFABKB] RL lever 1: Short circuit

Action code	Failure code	Trouble	RL lever 1: Short circuit (Work equipment controller system)
E03	**DFABKB**		
Contents of trouble	• Signal voltage of ripper control lever lift potentiometer 1 system is above 4.5 V.		
Action of controller	• Continues control with signal of ripper control lever lift potentiometer 2 system. • Limits operation of engine and transmission.		
Problem that appears on machine	• Once machine is stopped, engine speed is limited to medium (half). • Once machine is stopped, travel is limited to F1 and R1.		
Related information	• State of ripper control lever lift potentiometer 1 signal can be checked with monitoring function. (Code: 73700 Ripper Lift Lever A Potentio) • Method of reproducing failure code: Turn starting switch ON + Operate ripper control lever (in lifting direction).		

	Cause		Standard value in normal state/Remarks on troubleshooting			
Possible causes and standard value in normal state	1	Defective sensor 5V power supply system	If failure code [**DB97KK**] is also displayed, carry out troubleshooting for it first.			
	2	Defective ripper control lever lift potentiometer 1 (Internal short circuit)	★ Prepare with starting switch OFF, then carry out troubleshooting without turning starting switch ON.			
			WLV2 (male)	Ripper control lever	Resistance	
			Between (8) – (5)	Neutral	3.2 kΩ ± 20 %	
			Between (8) – (7)		1.6 kΩ ± 20 %	
			Between (7) – (5)		1.6 kΩ ± 20 %	
	3	Hot short (Short circuit with 24V circuit) in wiring harness	★ Prepare with starting switch OFF, then carry out troubleshooting without turning starting switch ON.			
			Wiring harness between WEC1 (female) (14) – WLV2 (female) (7) and chassis ground		Resistance	Min. 1 MΩ
	4	Defective work equipment controller	★ Prepare with starting switch OFF, then turn starting switch ON and carry out troubleshooting.			
			WEC1		Voltage	
			Between (14) – (21)		0.5 – 4.5 V	

Circuit diagram related to ripper control lever potentiometer

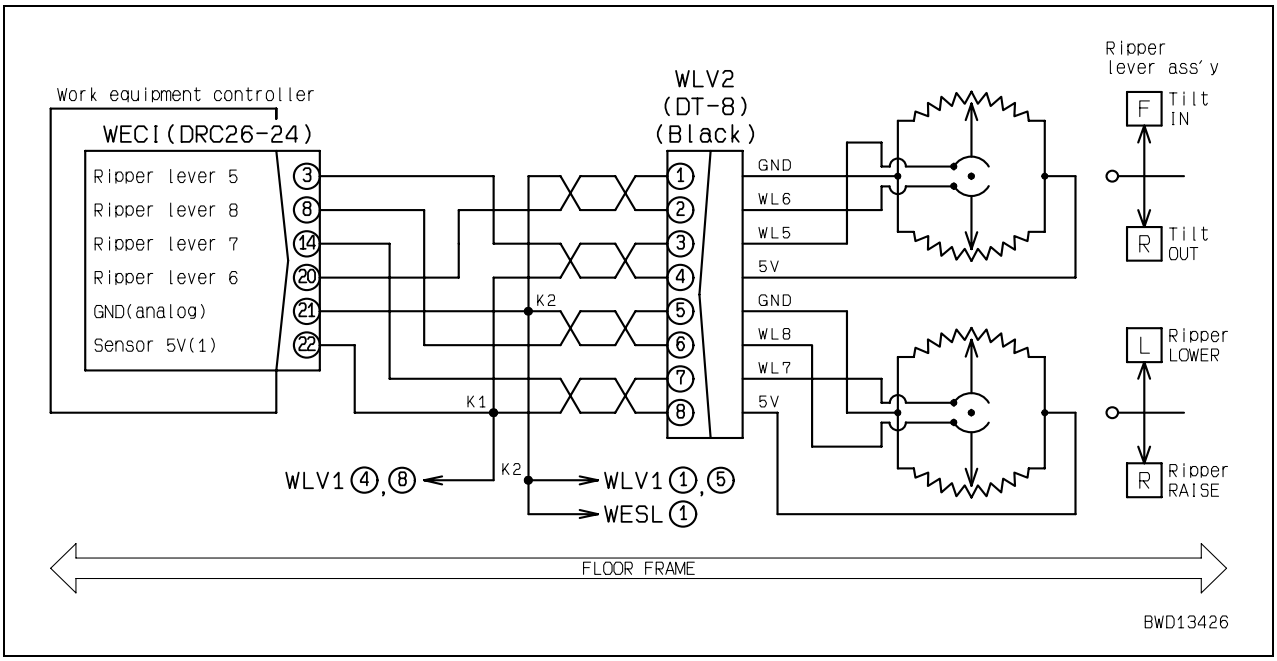

Failure code [DFACKA] RL lever 2: Disconnection

Action code	Failure code	Trouble	RL lever 2: Disconnection (Work equipment controller system)
E03	**DFACKA**		
Contents of trouble	• Signal voltage of ripper control lever lift potentiometer 2 system is below 0.5 V.		
Action of controller	• Continues control with signal of ripper control lever lift potentiometer 1 system. • Limits operation of engine and transmission.		
Problem that appears on machine	• Once machine is stopped, engine speed is limited to medium (half). • Once machine is stopped, travel is limited to F1 and R1.		
Related information	• State of ripper control lever lift potentiometer 2 signal can be checked with monitoring function. (Code: 73701 Ripper Lift Lever B Potentio) • Method of reproducing failure code: Turn starting switch ON + Operate ripper control lever (in lifting direction).		

	Cause		Standard value in normal state/Remarks on troubleshooting			
Possible causes and standard value in normal state	1	Defective sensor 5V power supply system	If failure code [**DB97KK**] is also displayed, carry out troubleshooting for it first.			
	2	Defective ripper control lever lift potentiometer 2 (Internal disconnection)	★ Prepare with starting switch OFF, then carry out troubleshooting without turning starting switch ON.			
			WLV2 (male)	Ripper control lever	Resistance	
			Between (8) – (5)	Neutral	3.2 kΩ ± 20 %	
			Between (8) – (6)		1.6 kΩ ± 20 %	
			Between (6) – (5)		1.6 kΩ ± 20 %	
	3	Disconnection in wiring harness (Disconnection in wiring or defective contact in connector)	★ Prepare with starting switch OFF, then carry out troubleshooting without turning starting switch ON.			
			Wiring harness between WEC1 (female) (22) – WLV2 (female) (8)		Resistance	Max. 1 Ω
			Wiring harness between WEC1 (female) (8) – WLV2 (female) (6)		Resistance	Max. 1 Ω
	4	Ground fault in wiring harness (Contact with GND circuit)	★ Prepare with starting switch OFF, then carry out troubleshooting without turning starting switch ON.			
			Wiring harness between WEC1 (female) (8) – WLV2 (female) (6) and chassis ground		Resistance	Min. 1 MΩ
	5	Defective work equipment controller	★ Prepare with starting switch OFF, then turn starting switch ON and carry out troubleshooting.			
			WEC1		Voltage	
			Between (8) – (21)		0.5 – 4.5 V	

Circuit diagram related to ripper control lever potentiometer

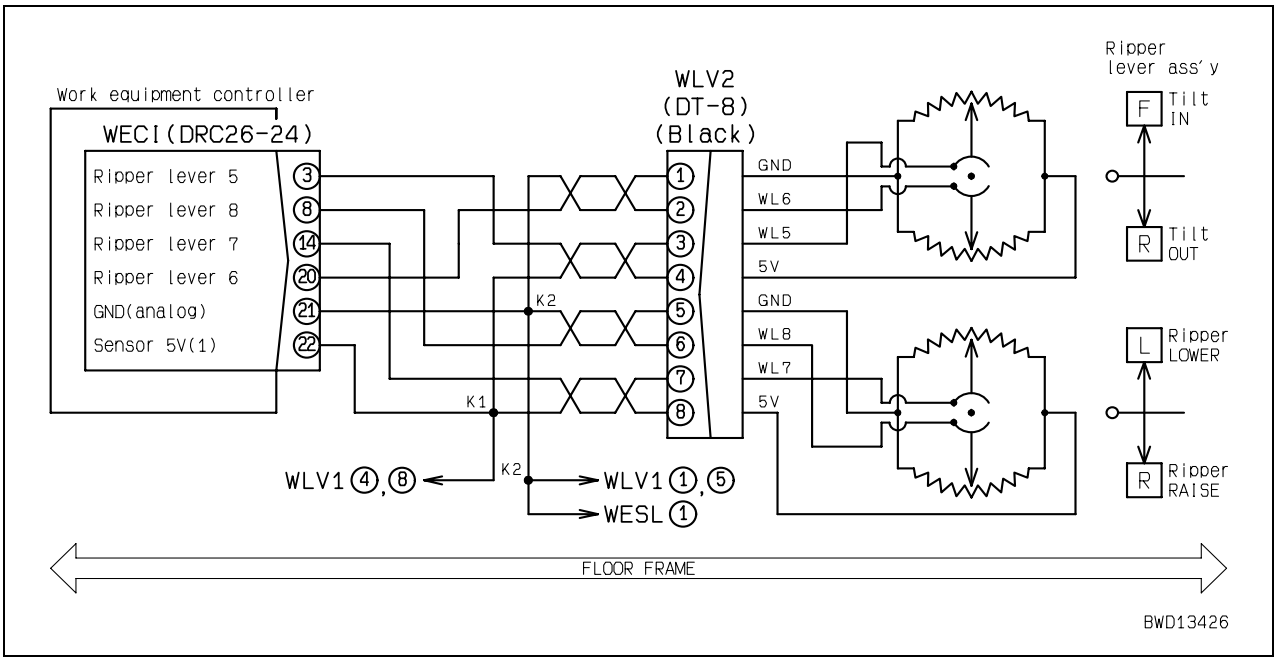

Failure code [DFACKB] RL lever 2: Short circuit

Action code	Failure code	Trouble	RL lever 2: Short circuit (Work equipment controller system)
E03	**DFACKB**		
Contents of trouble	• Signal voltage of ripper control lever lift potentiometer 2 system is above 4.5 V.		
Action of controller	• Continues control with signal of ripper control lever lift potentiometer 1 system. • Limits operation of engine and transmission.		
Problem that appears on machine	• Once machine is stopped, engine speed is limited to medium (half). • Once machine is stopped, travel is limited to F1 and R1.		
Related information	• tate of ripper control lever lift potentiometer 2 signal can be checked with monitoring function. (Code: 73701 Ripper Lift Lever B Potentio) • Method of reproducing failure code: Turn starting switch ON + Operate ripper control lever (in lifting direction).		

	Cause		Standard value in normal state/Remarks on troubleshooting			
Possible causes and standard value in normal state	1	Defective sensor 5V power supply system	If failure code [**DB97KK**] is also displayed, carry out troubleshooting for it first.			
	2	Defective ripper control lever lift potentiometer 2 (Internal short circuit)	★ Prepare with starting switch OFF, then carry out troubleshooting without turning starting switch ON.			
			WLV2 (male)	Ripper control lever	Resistance	
			Between (8) – (5)	Neutral	3.2 kΩ ± 20 %	
			Between (8) – (6)		1.6 kΩ ± 20 %	
			Between (6) – (5)		1.6 kΩ ± 20 %	
	3	Hot short (Short circuit with 24V circuit) in wiring harness	★ Prepare with starting switch OFF, then turn starting switch ON and carry out troubleshooting.			
			Wiring harness between WEC1 (female) (8) – WLV2 (female) (6) and chassis ground		Voltage	Max. 1 V
	4	Defective work equipment controller	★ Prepare with starting switch OFF, then turn starting switch ON and carry out troubleshooting.			
			WEC1		Voltage	
			Between (8) – (21)		0.5 – 4.5 V	

Circuit diagram related to ripper control lever potentiometer

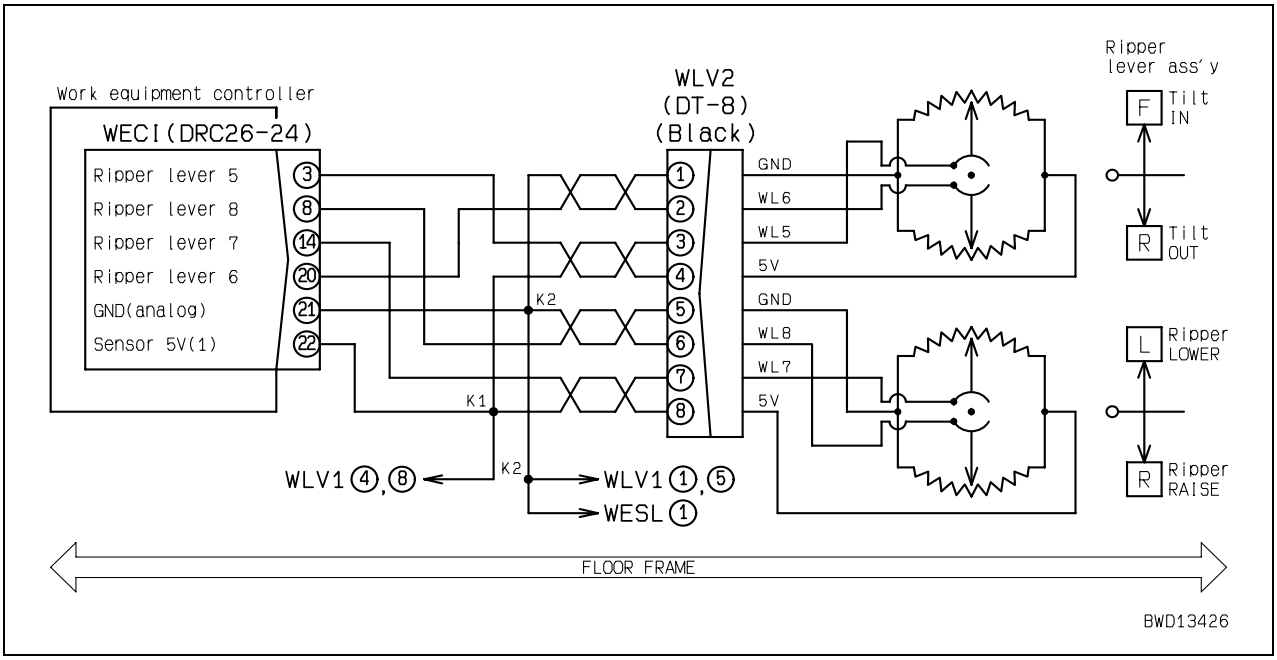

Failure code [DFADKX] RL lever 1: Out of normal range

Action code	Failure code	Trouble	RL lever 1: Out of normal range (Work equipment controller system)
E03	**DFADKX**		
Contents of trouble	• In ripper control lever tilt potentiometer 1 and 2 systems, either of failure codes [**DFAEKA**] and [**DFAEKB**] and either of failure codes [**DFAFKA**] and [**DFAFKB**] occurred simultaneously.		
Action of controller	• Limits operation of engine and transmission.		
Problem that appears on machine	• Once machine is stopped, engine speed is limited to medium (half). • Once machine is stopped, travel is limited to F1 and R1.		
Related information	• State of ripper control lever tilt potentiometer signal can be checked with monitoring function. (Code: 73600 Ripper Tilt Lever A Potentio) (Code: 73601 Ripper Tilt Lever B Potentio) • Method of reproducing failure code: Turn starting switch ON + Operate ripper control lever (in tilting direction).		

Possible causes and standard value in normal state	Cause	Standard value in normal state/Remarks on troubleshooting
	Carry out troubleshooting for failure codes [**DFAEKA**], [**DFAEKB**], [**DFAFKA**], and [**DFAFKB**].	

Failure code [DFADKZ] RL lever: Disconnection or short circuit

Action code	Failure code	Trouble	RL lever: Disconnection or short circuit (Work equipment controller system)
E03	**DFADKZ**		
Contents of trouble	• In ripper control lever tilt potentiometer 1 and 2 systems, when starting switch is turned ON, only either side is abnormal and then either of failure codes [**DFAEKA**] and [**DFAEKB**] and either of failure codes [**DFAFKA**] and [**DFAFKB**] occurred simultaneously.		
Action of controller	• Limits operation of engine and transmission.		
Problem that appears on machine	• Once machine is stopped, engine speed is limited to medium (half). • Once machine is stopped, travel is limited to F1 and R1.		
Related information	• State of ripper control lever tilt potentiometer signal can be checked with monitoring function. (Code: 73600 Ripper Tilt Lever A Potentio) (Code: 73601 Ripper Tilt Lever B Potentio) • Method of reproducing failure code: Turn starting switch ON + Operate ripper control lever (in tilting direction).		

Possible causes and standard value in normal state	Cause	Standard value in normal state/Remarks on troubleshooting
	Carry out troubleshooting for failure codes [**DFAEKA**], [**DFAEKB**], [**DFAFKA**], and [**DFAFKB**].	

Failure code [DFADL8] RL lever: Signal mismatch

Action code	Failure code	Trouble	RL lever: Signal mismatch (Work equipment controller system)
E03	**DFADL8**		
Contents of trouble	• In ripper control lever tilt potentiometer 1 and 2 systems, total of both signal voltages is below 4.41 V or above 5.59 V.		
Action of controller	• Continues control with signal of normal one of ripper control lever tilt potentiometer 1 and 2 systems. • Limits operation of engine and transmission.		
Problem that appears on machine	• Once machine is stopped, engine speed is limited to medium (half). • Once machine is stopped, travel is limited to F1 and R1.		
Related information	• State of ripper control lever tilt potentiometer signal can be checked with monitoring function. (Code: 73600 Ripper Tilt Lever A Potentio) (Code: 73601 Ripper Tilt Lever B Potentio) • Method of reproducing failure code: Turn starting switch ON + Operate ripper control lever (in tilting direction).		

Possible causes and standard value in normal state	Cause	Standard value in normal state/Remarks on troubleshooting
	Carry out troubleshooting for failure codes [**DFAEKA]**, [**DFAEKB**], [**DFAFKA**], and [**DFAFKB**].	

Failure code [DFAEKA] RL lever 1: Disconnection

Action code	Failure code	Trouble	RL lever 1: Disconnection (Work equipment controller system)
E03	**DFAEKA**		
Contents of trouble	• Signal voltage of ripper control lever tilt potentiometer 1 system is below 0.5 V.		
Action of controller	• Continues control with signal of ripper control lever tilt potentiometer 2 system. • Limits operation of engine and transmission.		
Problem that appears on machine	• Once machine is stopped, engine speed is limited to medium (half). • Once machine is stopped, travel is limited to F1 and R1.		
Related information	• State of ripper control lever tilt potentiometer 1 signal can be checked with monitoring function. (Code: 73600 Ripper Tilt Lever A Potentio) • Method of reproducing failure code: Turn starting switch ON + Operate ripper control lever (in tilting direction).		

	Cause		Standard value in normal state/Remarks on troubleshooting			
Possible causes and standard value in normal state	1	Defective sensor 5V power supply system	If failure code [**DB97KK**] is also displayed, carry out troubleshooting for it first.			
	2	Defective ripper control lever tilt potentiometer 1 (Internal disconnection)	★ Prepare with starting switch OFF, then carry out troubleshooting without turning starting switch ON.			
			WLV2 (male)	Ripper control lever	Resistance	
			Between (4) – (1)	Neutral	3.2 kΩ ± 20 %	
			Between (4) – (3)		1.6 kΩ ± 20 %	
			Between (3) – (1)		1.6 kΩ ± 20 %	
	3	Disconnection in wiring harness (Disconnection in wiring or defective contact in connector)	★ Prepare with starting switch OFF, then carry out troubleshooting without turning starting switch ON.			
			Wiring harness between WEC1 (female) (22) – WLV2 (female) (4)		Resistance	Max. 1 Ω
			Wiring harness between WEC1 (female) (3) – WLV2 (female) (3)		Resistance	Max. 1 Ω
	4	Ground fault in wiring harness (Contact with GND circuit)	★ Prepare with starting switch OFF, then carry out troubleshooting without turning starting switch ON.			
			Wiring harness between WEC1 (female) (3) – WLV2 (female) (3) and chassis ground		Resistance	Min. 1 MΩ
	5	Defective work equipment controller	★ Prepare with starting switch OFF, then turn starting switch ON and carry out troubleshooting.			
			WEC1		Voltage	
			Between (3) – (21)		0.5 – 4.5 V	

Circuit diagram related to ripper control lever potentiometer

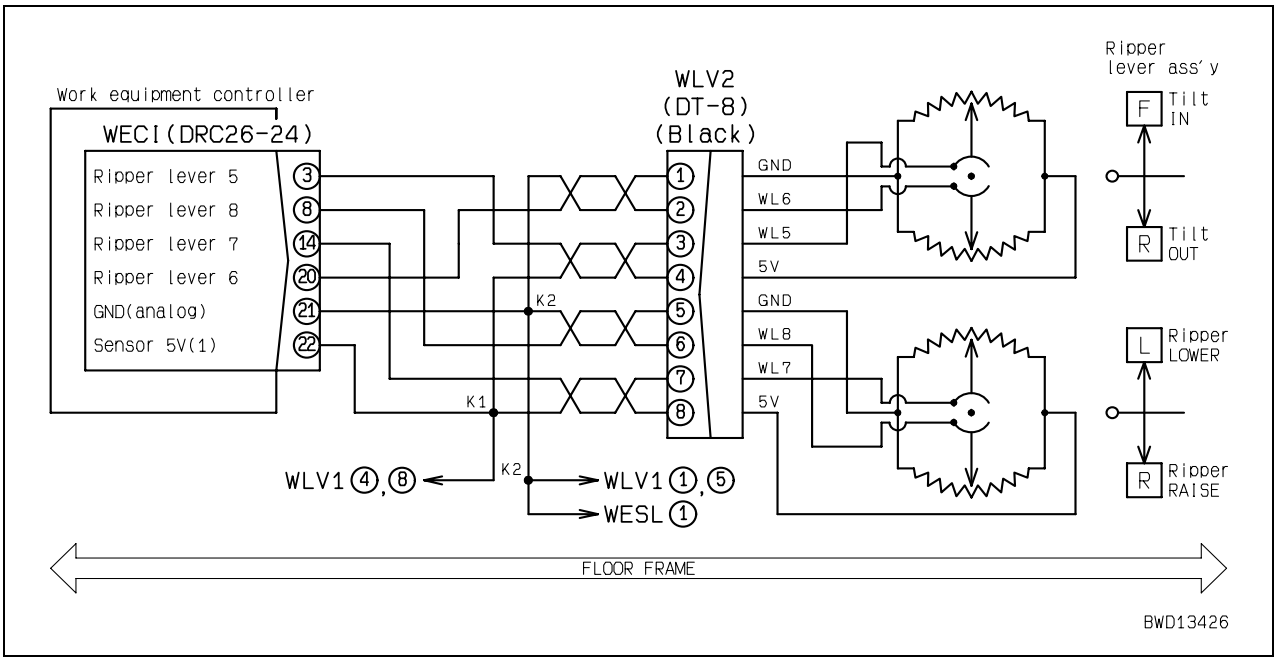

Failure code [DFAEKB] RL lever 1: Short circuit

Action code	Failure code	Trouble	RL lever 1: Short circuit (Work equipment controller system)
E03	**DFAEKB**		
Contents of trouble	• Signal voltage of ripper control lever tilt potentiometer 1 system is above 4.5 V.		
Action of controller	• Continues control with signal of ripper control lever tilt potentiometer 2 system. • Limits operation of engine and transmission.		
Problem that appears on machine	• Once machine is stopped, engine speed is limited to medium (half). • Once machine is stopped, travel is limited to F1 and R1.		
Related information	• State of ripper control lever tilt potentiometer 1 signal can be checked with monitoring function. (Code: 73600 Ripper Tilt Lever A Potentio) • Method of reproducing failure code: Turn starting switch ON + Operate ripper control lever (in tilting direction).		

	Cause		Standard value in normal state/Remarks on troubleshooting			
Possible causes and standard value in normal state	1	Defective sensor 5V power supply system	If failure code [**DB97KK**] is also displayed, carry out troubleshooting for it first.			
	2	Defective ripper control lever tilt potentiometer 1 (Internal short circuit)	★ Prepare with starting switch OFF, then carry out troubleshooting without turning starting switch ON.			
			WLV2 (male)	Ripper control lever	Resistance	
			Between (4) – (1)	Neutral	3.2 kΩ ± 20 %	
			Between (4) – (3)		1.6 kΩ ± 20 %	
			Between (3) – (1)		1.6 kΩ ± 20 %	
	3	Hot short (Short circuit with 24V circuit) in wiring harness	★ Prepare with starting switch OFF, then turn starting switch ON and carry out troubleshooting.			
			Wiring harness between WEC1 (female) (3) – WLV2 (female) (3) and chassis ground		Voltage	Max. 1 V
	4	Defective work equipment controller	★ Prepare with starting switch OFF, then turn starting switch ON and carry out troubleshooting.			
			WEC1		Voltage	
			Between (3) – (21)		0.5 – 4.5 V	

Circuit diagram related to ripper control lever potentiometer

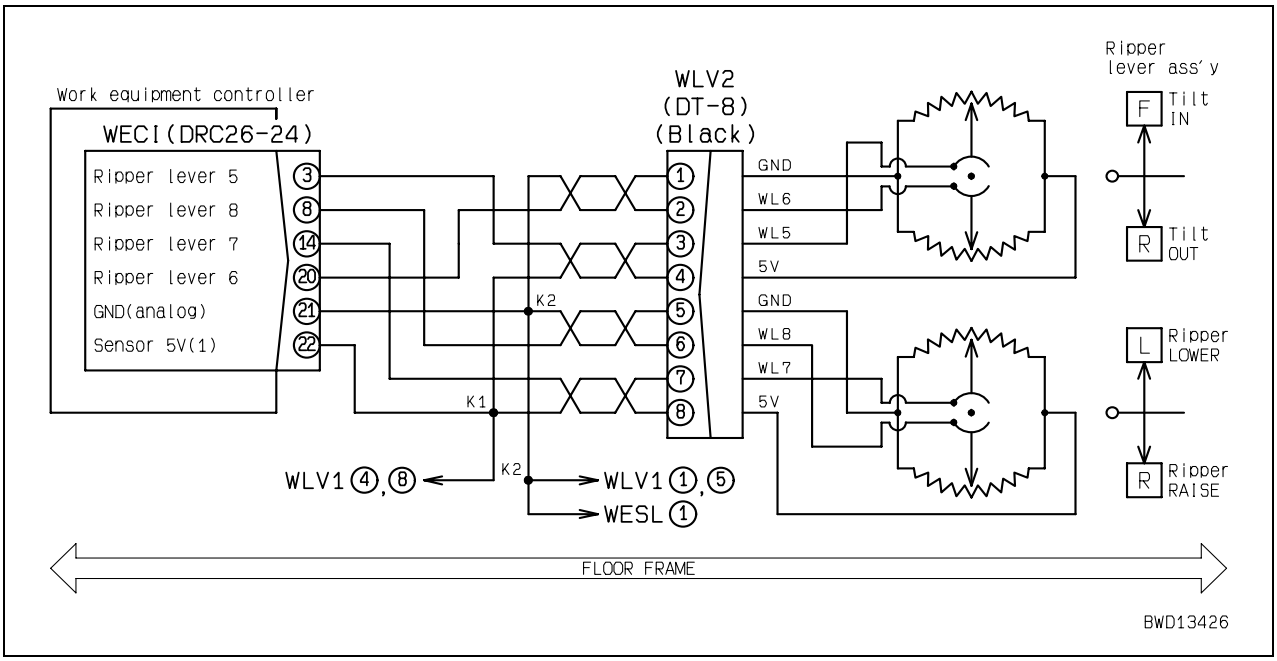

Failure code [DFAFKA] RL lever 2: Disconnection

Action code	Failure code	Trouble	RL lever 2: Disconnection (Work equipment controller system)
E03	**DFAFKA**		
Contents of trouble	• Signal voltage of ripper control lever tilt potentiometer 2 system is below 0.5 V.		
Action of controller	• Continues control with signal of ripper control lever tilt potentiometer 1 system. • Limits operation of engine and transmission.		
Problem that appears on machine	• Once machine is stopped, engine speed is limited to medium (half). • Once machine is stopped, travel is limited to F1 and R1.		
Related information	• State of ripper control lever tilt potentiometer 2 signal can be checked with monitoring function. (Code: 73601 Ripper Tilt Lever B Potentio) • Method of reproducing failure code: Turn starting switch ON + Operate ripper control lever (in tilting direction).		

	Cause		Standard value in normal state/Remarks on troubleshooting			
Possible causes and standard value in normal state	1	Defective sensor 5V power supply system	If failure code [**DB97KK**] is also displayed, carry out troubleshooting for it first.			
	2	Defective ripper control lever tilt potentiometer 2 (Internal disconnection)	★ Prepare with starting switch OFF, then carry out troubleshooting without turning starting switch ON.			
			WLV2 (male)	Ripper control lever	Resistance	
			Between (4) – (1)	Neutral	3.2 kΩ ± 20 %	
			Between (4) – (2)		1.6 kΩ ± 20 %	
			Between (2) – (1)		1.6 kΩ ± 20 %	
	3	Disconnection in wiring harness (Disconnection in wiring or defective contact in connector)	★ Prepare with starting switch OFF, then carry out troubleshooting without turning starting switch ON.			
			Wiring harness between WEC1 (female) (22) – WLV2 (female) (4)		Resistance	Max. 1 Ω
			Wiring harness between WEC1 (female) (20) – WLV2 (female) (2)		Resistance	Max. 1 Ω
	4	Ground fault in wiring harness (Contact with GND circuit)	★ Prepare with starting switch OFF, then carry out troubleshooting without turning starting switch ON.			
			Wiring harness between WEC1 (female) (20) – WLV2 (female) (2) and chassis ground		Resistance	Min. 1 MΩ
	5	Defective work equipment controller	★ Prepare with starting switch OFF, then turn starting switch ON and carry out troubleshooting.			
			WEC1		Voltage	
			Between (20) – (21)		0.5 – 4.5 V	

Circuit diagram related to ripper control lever potentiometer

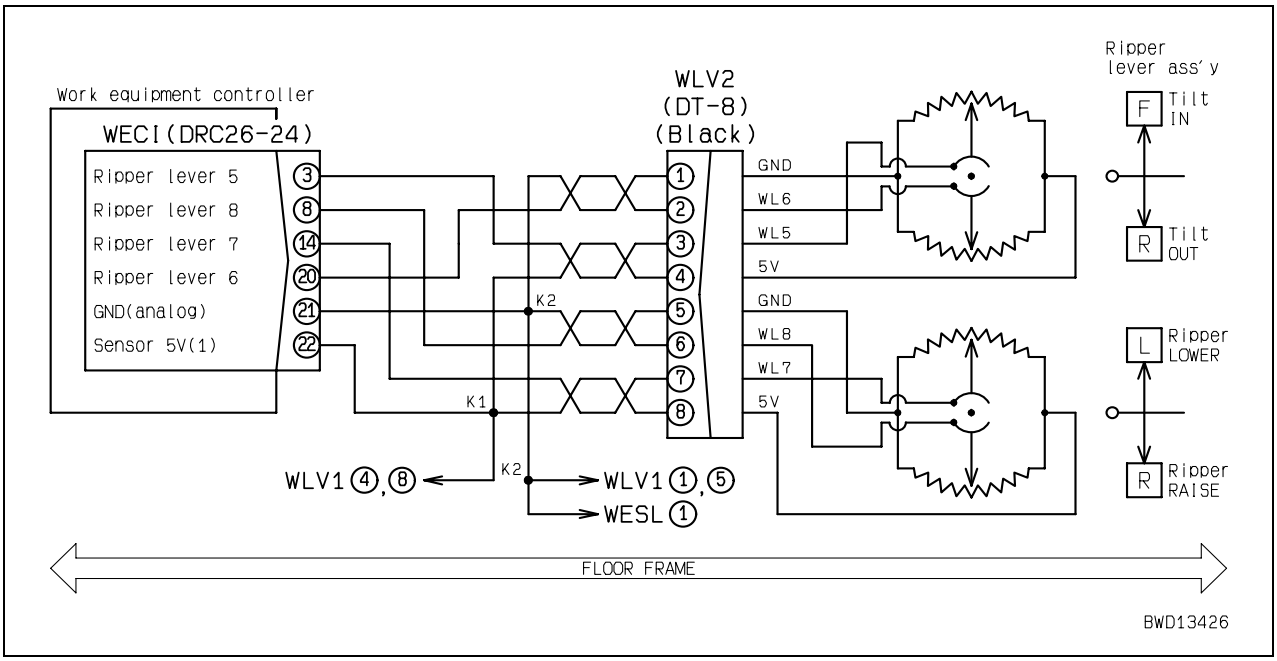

Failure code [DFAFKB] RL lever 2: Short circuit

Action code	Failure code	Trouble	RL lever 2: Short circuit (Work equipment controller system)
E03	**DFAFKB**		
Contents of trouble	• Signal voltage of ripper control lever tilt potentiometer 2 system is above 4.5 V.		
Action of controller	• Continues control with signal of ripper control lever tilt potentiometer 1 system. • Limits operation of engine and transmission.		
Problem that appears on machine	• Once machine is stopped, engine speed is limited to medium (half). • Once machine is stopped, travel is limited to F1 and R1.		
Related information	• State of ripper control lever tilt potentiometer 2 signal can be checked with monitoring function. (Code: 73601 Ripper Tilt Lever B Potentio) • Method of reproducing failure code: Turn starting switch ON + Operate ripper control lever (in tilting direction).		

<table>
<tr><td rowspan="15">Possible causes and standard value in normal state</td><td colspan="2">Cause</td><td colspan="4">Standard value in normal state/Remarks on troubleshooting</td></tr>
<tr><td>1</td><td>Defective sensor 5V power supply system</td><td colspan="4">If failure code [DB97KK] is also displayed, carry out troubleshooting for it first.</td></tr>
<tr><td rowspan="5">2</td><td rowspan="5">Defective ripper control lever tilt potentiometer 2 (Internal short circuit)</td><td colspan="4">★ Prepare with starting switch OFF, then carry out troubleshooting without turning starting switch ON.</td></tr>
<tr><td>WLV2 (male)</td><td>Ripper control lever</td><td colspan="2">Resistance</td></tr>
<tr><td>Between (4) – (1)</td><td rowspan="3">Neutral</td><td colspan="2">3.2 kΩ ± 20 %</td></tr>
<tr><td>Between (4) – (2)</td><td colspan="2">1.6 kΩ ± 20 %</td></tr>
<tr><td>Between (2) – (1)</td><td colspan="2">1.6 kΩ ± 20 %</td></tr>
<tr><td rowspan="3">3</td><td rowspan="3">Hot short (Short circuit with 24V circuit) in wiring harness</td><td colspan="4">★ Prepare with starting switch OFF, then turn starting switch ON and carry out troubleshooting.</td></tr>
<tr><td colspan="2">Wiring harness between WEC1 (female) (20) – WLV2 (female) (2) and chassis ground</td><td>Voltage</td><td>Max. 1 V</td></tr>
<tr><td colspan="4"></td></tr>
<tr><td rowspan="3">4</td><td rowspan="3">Defective work equipment controller</td><td colspan="4">★ Prepare with starting switch OFF, then turn starting switch ON and carry out troubleshooting.</td></tr>
<tr><td colspan="2">WEC1</td><td colspan="2">Voltage</td></tr>
<tr><td colspan="2">Between (20) – (21)</td><td colspan="2">0.5 – 4.5 V</td></tr>
</table>

Circuit diagram related to ripper control lever potentiometer

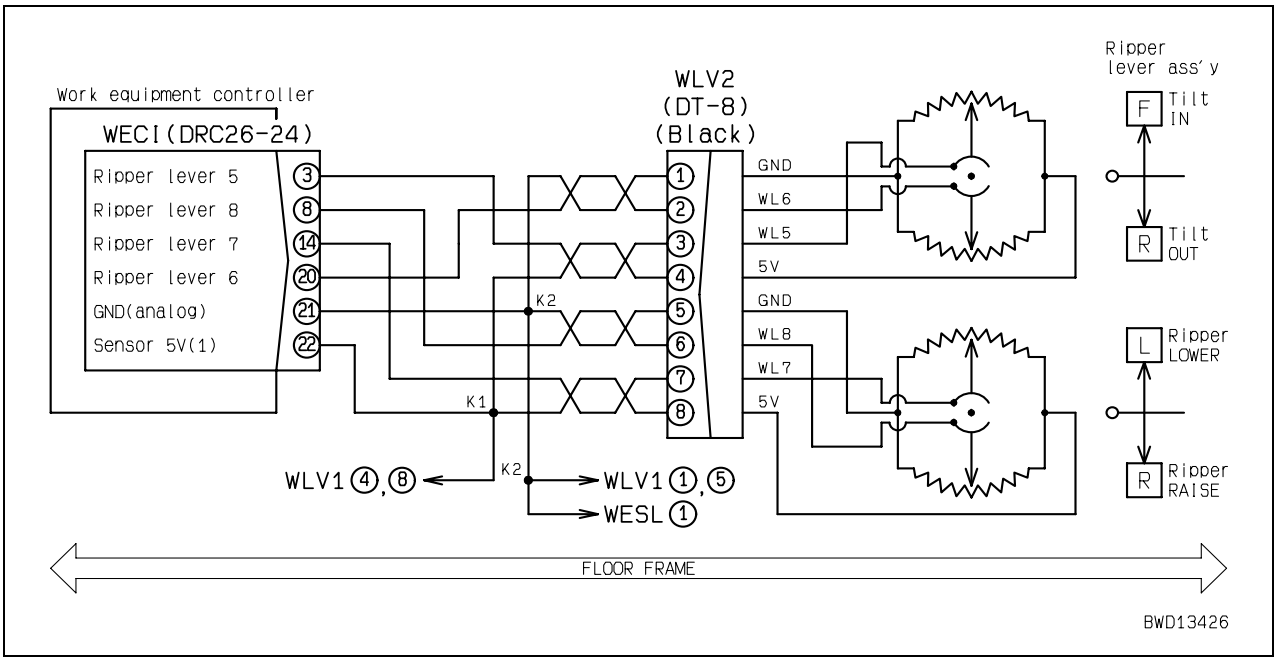

Failure code [DGT1KA] T/C oil temp sensor: Abnormal

Action code	Failure code	Trouble	T/C oil temp sensor: Abnormal (Power train controller system)
E01	**DGT1KA**		
Contents of trouble	• Torque converter oil temperature sensor signal is out of normal range.		
Action of controller	• None in particular.		
Problem that appears on machine	• Power train oil temperature gauge may not indicate normally.		
Related information	• Torque converter oil temperature can be checked with monitoring function. (Code: 30100 T/C Oil Temperature) • Method of reproducing failure code: Turn starting switch ON or start engine.		

	Cause		Standard value in normal state/Remarks on troubleshooting			
Possible causes and standard value in normal state	1	Defective torque converter oil temperature sensor (Internal short circuit or disconnection)	★ Prepare with starting switch OFF, then carry out troubleshooting without turning starting switch ON.			
			TCT (male)	Resistance		
			Between (1) – (2)	1 – 50 kΩ		
			Between (1) – chassis ground	Min. 1 MΩ		
	2	Disconnection in wiring harness (Disconnection in wiring or defective contact in connector)	★ Prepare with starting switch OFF, then carry out troubleshooting without turning starting switch ON.			
			Wiring harness between STC1 (female) (9) – TCT (female) (1)	Resistance	Max. 1 V	
			Wiring harness between STC1 (female) (21) – TCT (female) (2)	Resistance	Max. 1 V	
	3	Ground fault in wiring harness (Contact with GND circuit)	★ Prepare with starting switch OFF, then carry out troubleshooting without turning starting switch ON.			
			Wiring harness between STC1 (female) (9) – TCT (female) (1) and chassis ground	Resistance	Min. 1 MΩ	
	4	Hot short (Short circuit with 24V circuit) in wiring harness	★ Prepare with starting switch OFF, then turn starting switch ON and carry out troubleshooting.			
			Wiring harness between STC1 (female) (9) – TCT (female) (1) and chassis ground	Voltage	Max. 1 V	
	5	Defective power train controller	★ Prepare with starting switch OFF, then carry out troubleshooting without turning starting switch ON.			
			STC1 (female)	Resistance		
			Between (9) – (21)	1 – 50 kΩ		
			Between (9) – chassis ground	Min. 1 MΩ		

Circuit diagram related to torque converter oil temperature sensor

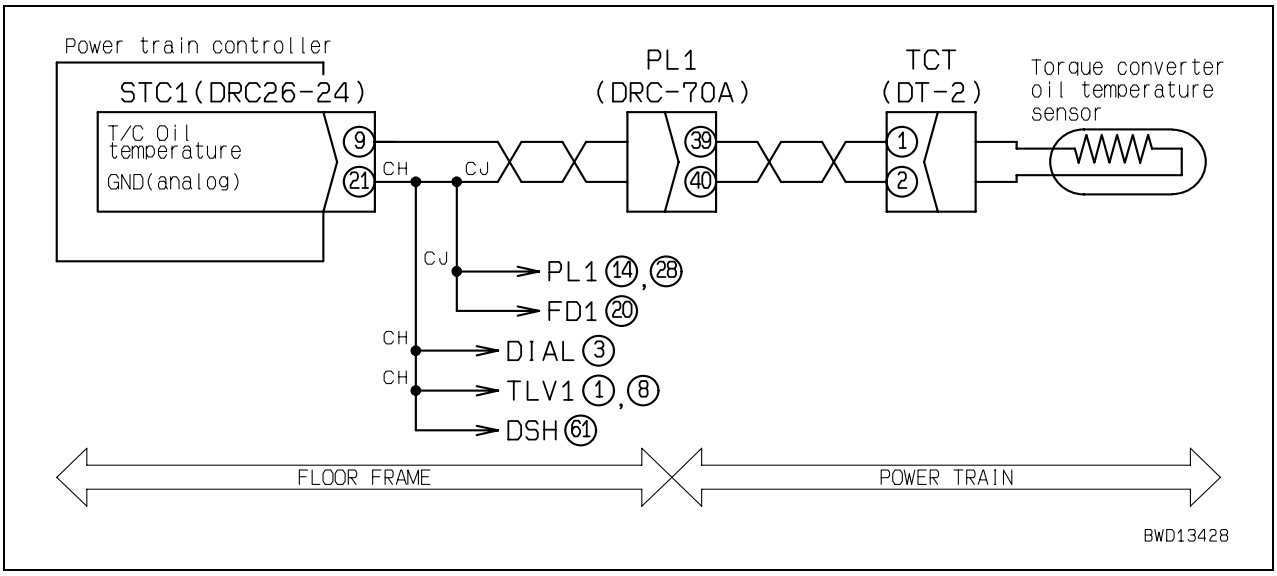

Failure code [DGT1KX] T/C oil temp sensor: Abnormal

Action code	Failure code	Trouble	T/C oil temp sensor: Abnormal (Power train controller system)
E01	**DGT1KX**		
Contents of trouble	• Torque converter oil temperature sensor signal is out of normal range.		
Action of controller	• None in particular.		
Problem that appears on machine	• Power train oil temperature gauge may not indicate normally.		
Related information	• Torque converter oil temperature can be checked with monitoring function. (Code: 30100 T/C Oil Temperature) • Method of reproducing failure code: Turn starting switch ON or start engine.		

	Cause		Standard value in normal state/Remarks on troubleshooting			
Possible causes and standard value in normal state	1	Defective torque converter oil temperature sensor (Internal short circuit or disconnection)	★ Prepare with starting switch OFF, then carry out troubleshooting without turning starting switch ON.			
			TCT (male)	Resistance		
			Between (1) – (2)	1 – 50 kΩ		
			Between (1) – chassis ground	Min. 1 MΩ		
	2	Disconnection in wiring harness (Disconnection in wiring or defective contact in connector)	★ Prepare with starting switch OFF, then carry out troubleshooting without turning starting switch ON.			
			Wiring harness between STC1 (female) (9) – TCT (female) (1)	Resistance	Max. 1 Ω	
			Wiring harness between STC1 (female) (21) – TCT (female) (2)	Resistance	Max. 1 Ω	
	3	Ground fault in wiring harness (Contact with GND circuit)	★ Prepare with starting switch OFF, then carry out troubleshooting without turning starting switch ON.			
			Wiring harness between STC1 (female) (9) – TCT (female) (1) and chassis ground	Resistance	Min. 1 MΩ	
	4	Hot short (Short circuit with 24V circuit) in wiring harness	★ Prepare with starting switch OFF, then turn starting switch ON and carry out troubleshooting.			
			Wiring harness between STC1 (female) (9) – TCT (female) (1) and chassis ground	Voltage	Max. 1 V	
	5	Defective power train controller	★ Prepare with starting switch OFF, then carry out troubleshooting without turning starting switch ON.			
			STC1 (female)	Resistance		
			Between (9) – (21)	1 – 50 kΩ		
			Between (9) – chassis ground	Min. 1 MΩ		

Circuit diagram related to torque converter oil temperature sensor

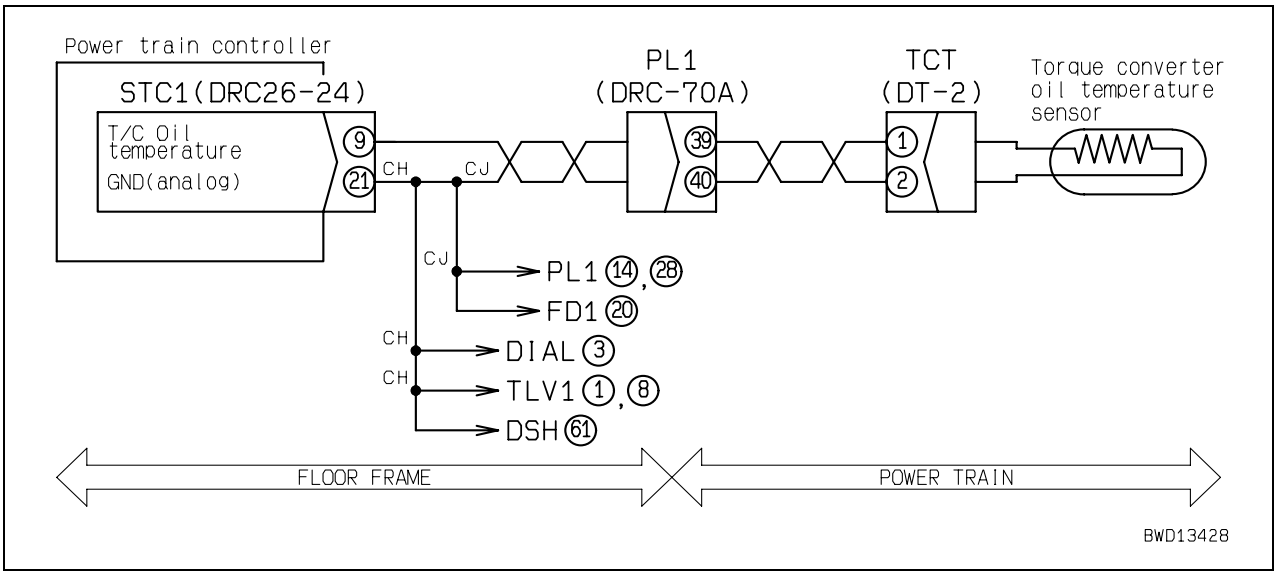

Failure code [DH21KA] Weq pressure sensor: Disconnection

Action code	Failure code	Trouble	Weq pressure sensor: Disconnection (Work equipment controller system)
–	**DH21KA**		
Contents of trouble	• Signal voltage of work equipment pump oil pressure sensor is below 0.5 V.		
Action of controller	• None in particular.		
Problem that appears on machine	• Oil pressure of work equipment pump cannot be monitored.		
Related information	• State of work equipment pump oil pressure sensor can be checked with monitoring function. (Code: 70701 Hydraulic Pressure Sensor 1) • Method of reproducing failure code: Turn starting switch ON.		

	Cause		Standard value in normal state/Remarks on troubleshooting			
Possible causes and standard value in normal state	1	Defective sensor 5V power supply system	If failure code [**DB95KK**] is also displayed, carry out troubleshooting for it first.			
	2	Defective work equipment oil pressure sensor (Internal trouble)	★ Prepare with starting switch OFF, then turn starting switch ON or start engine and carry out troubleshooting in each case.			
			HHP		Voltage	
			Between (B) – (A)	Power supply	4.5 – 5.5 V	
			Between (C) – (A)	Signal	0.5 – 6.0 V	
			Sensor voltage is measured with wiring harness connected. Accordingly, if voltage is abnormal, check wiring harness and controller, too, for another cause of trouble, and then judge.			
	3	Disconnection in wiring harness (Disconnection in wiring or defective contact in connector)	★ Prepare with starting switch OFF, then carry out troubleshooting without turning starting switch ON.			
			Wiring harness between WEC1 (female) (21) – HHP (female) (A)		Resistance	Max. 1 Ω
			Wiring harness between WEC3 (female) (34) – HHP (female) (B)		Resistance	Max. 1 Ω
			Wiring harness between WEC1 (female) (1) – HHP (female) (C)		Resistance	Max. 1 Ω
	4	Ground fault in wiring harness (Contact with GND circuit)	★ Prepare with starting switch OFF, then carry out troubleshooting without turning starting switch ON.			
			Wiring harness between WEC1 (female) (1) – HHP (female) (C) and chassis ground		Resistance	Min. 1 MΩ
	5	Defective work equipment controller	If causes 1 – 4 are not detected, work equipment controller may be defective. (Since trouble is in system, troubleshooting cannot be carried out.)			

Circuit diagram related to work equipment oil pressure sensor

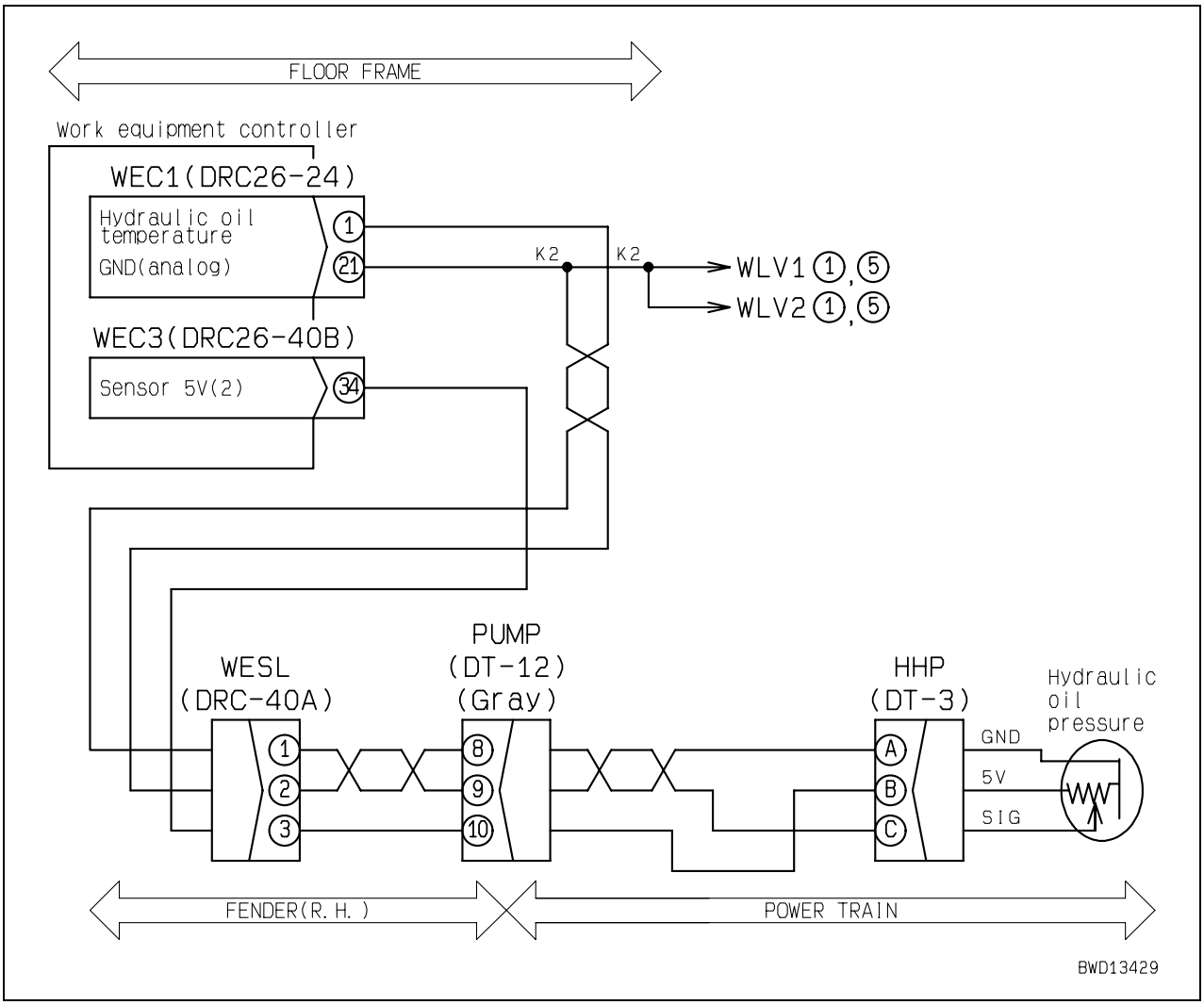

Failure code [DH21KB] Weq pressure sensor: Short circuit

Action code	Failure code	Trouble	Weq pressure sensor: Short circuit (Work equipment controller system)
–	**DH21KB**		
Contents of trouble	• Signal voltage of work equipment pump oil pressure sensor is below 6.0 V.		
Action of controller	• None in particular.		
Problem that appears on machine	• Oil pressure of work equipment pump cannot be monitored.		
Related information	• State of work equipment pump oil pressure sensor can be checked with monitoring function. (Code: 70701 Hydraulic Pressure Sensor 1) • Method of reproducing failure code: Turn starting switch ON.		

	Cause		Standard value in normal state/Remarks on troubleshooting			
Possible causes and standard value in normal state	1	Defective sensor 5V power supply system	If failure code [**DB95KK**] is also displayed, carry out troubleshooting for it first.			
	2	Defective work equipment oil pressure sensor (Internal trouble)	★ Prepare with starting switch OFF, then turn starting switch ON or start engine and carry out troubleshooting in each case.			
			HHP		Voltage	
			Between (B) – (A)	Power supply	4.5 – 5.5 V	
			Between (C) – (A)	Signal	0.5 – 6.0 V	
			Sensor voltage is measured with wiring harness connected. Accordingly, if voltage is abnormal, check wiring harness and controller, too, for another cause of trouble, and then judge.			
	3	Hot short (Short circuit with 24V circuit) in wiring harness	★ Prepare with starting switch OFF, then turn starting switch ON and carry out troubleshooting.			
			Wiring harness between WEC1 (female) (1) – HHP (female) (C) and chassis ground		Voltage	Max. 1 V
	4	Defective work equipment controller	If causes 1 – 3 are not detected, work equipment controller may be defective. (Since trouble is in system, troubleshooting cannot be carried out.)			

Circuit diagram related to work equipment oil pressure sensor

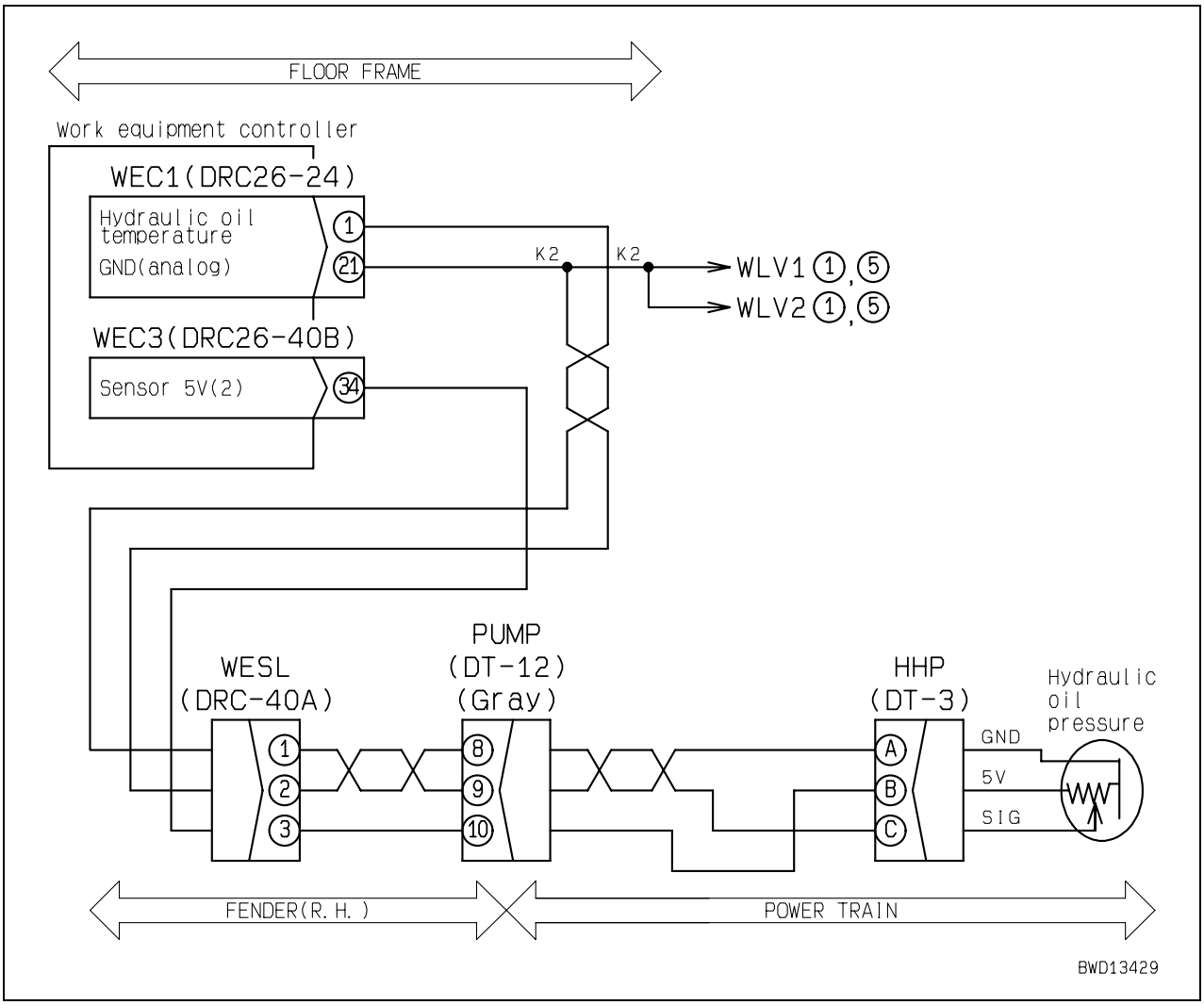

Failure code [DHT5KA] T/C in-pressure sensor: Disconnection

Action code	Failure code	Trouble	T/C in-pressure sensor: Disconnection (Power train controller system)
E02	**DHT5KA**		
Contents of trouble	• Signal voltage of torque converter inlet pressure sensor is below 0.5 V.		
Action of controller	• Limits operation of engine and transmission.		
Problem that appears on machine	• Torque converter inlet pressure cannot be monitored. • Once machine is stopped, engine speed is limited to medium (half). • Once machine is stopped, travel is limited to F1 and R1.		
Related information	• State of torque converter inlet pressure sensor can be checked with monitoring function. (Code: 32602 T/C In Pressure Sensor) • Method of reproducing failure code: Turn starting switch ON.		

	Cause		Standard value in normal state/Remarks on troubleshooting		
Possible causes and standard value in normal state	1	Defective sensor 24 V power supply system	If failure code [**DBE6KK**] is also displayed, carry out troubleshooting for it first.		
	2	Defective torque converter inlet pressure sensor (Internal trouble)	★ Prepare with starting switch OFF, then turn starting switch ON or start engine and carry out troubleshooting in each case.		
			TIP		Voltage
			Between (B) – (A)	Power supply	20 – 30 V
			Between (C) – (A)	Signal	0.5 – 6.0 V
			Sensor voltage is measured with wiring harness connected. Accordingly, if voltage is abnormal, check wiring harness and controller, too, for another cause of trouble, and then judge.		
	3	Disconnection in wiring harness (Disconnection in wiring or defective contact in connector)	★ Prepare with starting switch OFF, then carry out troubleshooting without turning starting switch ON.		
			Wiring harness between STC1 (female) (21) – TIP (female) (A)	Resistance	Max. 1 Ω
			Wiring harness between STC1 (female) (16) – TIP (female) (B)	Resistance	Max. 1 Ω
			Wiring harness between STC1 (female) (20) – TIP (female) (C)	Resistance	Max. 1 Ω
	4	Ground fault in wiring harness (Contact with GND circuit)	★ Prepare with starting switch OFF, then carry out troubleshooting without turning starting switch ON.		
			Wiring harness between STC1 (female) (16) – TIP (female) (B) or circuit branch end and chassis ground	Resistance	Min. 1 MΩ
			Wiring harness between STC1 (female) (20) – TIP (female) (C) and chassis ground	Resistance	Min. 1 MΩ
	5	Defective power train controller	If causes 1 – 4 are not detected, power train controller may be defective. (Since trouble is in system, troubleshooting cannot be carried out.)		

Circuit diagram related to torque converter inlet pressure sensor

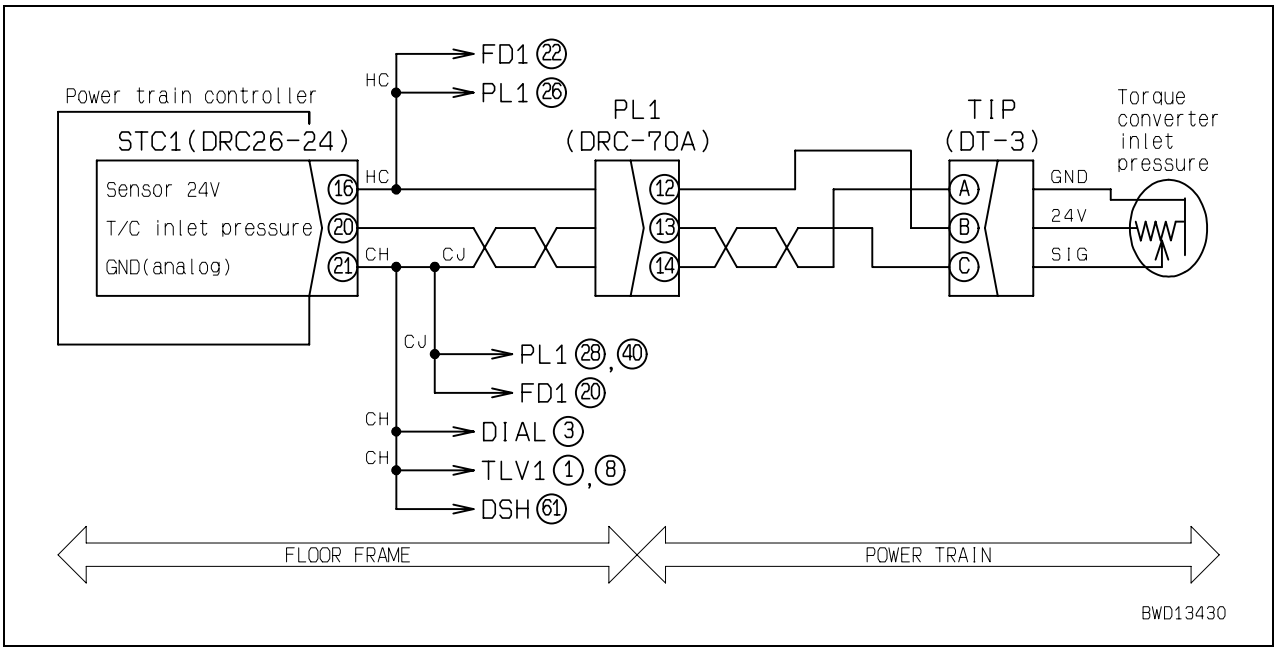

Failure code [DHT5KB] T/C in-pressure sensor: Short circuit

Action code	Failure code	Trouble	T/C in-pressure sensor: Short circuit (Power train controller system)
E02	**DHT5KB**		
Contents of trouble	• Signal voltage of torque converter inlet pressure sensor is above 6.0 V.		
Action of controller	• Limits operation of engine and transmission.		
Problem that appears on machine	• Torque converter inlet pressure cannot be monitored. • Once machine is stopped, engine speed is limited to medium (half). • Once machine is stopped, travel is limited to F1 and R1.		
Related information	• State of torque converter inlet pressure sensor can be checked with monitoring function. (Code: 32602 T/C In Pressure Sensor) • Method of reproducing failure code: Turn starting switch ON.		

	Cause		Standard value in normal state/Remarks on troubleshooting		
Possible causes and standard value in normal state	1	Defective sensor 24 V power supply system	If failure code [**DBE6KK**] is also displayed, carry out troubleshooting for it first.		
	2	Defective torque converter inlet pressure sensor (Internal trouble)	★ Prepare with starting switch OFF, then turn starting switch ON or start engine and carry out troubleshooting in each case.		
			TIP		Voltage
			Between (B) – (A)	Power supply	20 – 30 V
			Between (C) – (A)	Signal	0.5 – 6.0 V
			Sensor voltage is measured with wiring harness connected. Accordingly, if voltage is abnormal, check wiring harness and controller, too, for another cause of trouble, and then judge.		
	3	Hot short (Short circuit with 24V circuit) in wiring harness	★ Prepare with starting switch OFF, then turn starting switch ON and carry out troubleshooting.		
			Wiring harness between STC1 (female) (21) – TIP (female) (A) or circuit branch end and chassis ground	Voltage	Max. 1 V
			Wiring harness between STC1 (female) (20) – TIP (female) (C) and chassis ground	Voltage	Max. 1 V
	4	Defective power train controller	If causes 1 – 3 are not detected, power train controller may be defective. (Since trouble is in system, troubleshooting cannot be carried out.)		

Circuit diagram related to torque converter inlet pressure sensor

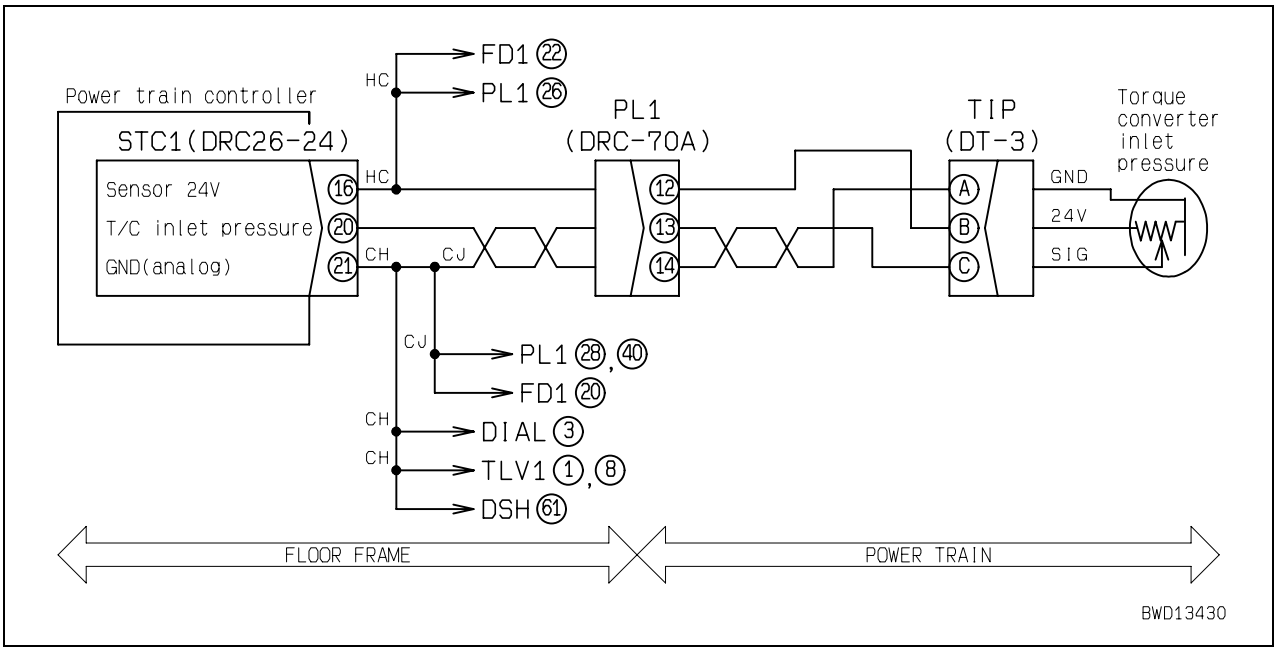

Failure code [DHT7KA] T/C out-pressure sensor: Disconnection

Action code	Failure code	Trouble	T/C out-pressure sensor: Disconnection (Power train controller system)
E02	**DHT7KA**		
Contents of trouble	• Signal voltage of torque converter outlet pressure sensor is below 0.5 V.		
Action of controller	• Limits operation of engine and transmission.		
Problem that appears on machine	• Torque converter outlet pressure cannot be monitored. • Once machine is stopped, engine speed is limited to medium (half). • Once machine is stopped, travel is limited to F1 and R1.		
Related information	• State of torque converter outlet pressure sensor can be checked with monitoring function. (Code: 32604 T/C Out Pressure Sensor) • Method of reproducing failure code: Turn starting switch ON.		

	Cause		Standard value in normal state/Remarks on troubleshooting		
Possible causes and standard value in normal state	1	Defective sensor 24 V power supply system	If failure code [**DBE6KK**] is also displayed, carry out troubleshooting for it first.		
	2	Defective torque converter outlet pressure sensor (Internal trouble)	★ Prepare with starting switch OFF, then turn starting switch ON or start engine and carry out troubleshooting in each case.		
			TOP		Voltage
			Between (B) – (A)	Power supply	20 – 30 V
			Between (C) – (A)	Signal	0.5 – 6.0 V
			Sensor voltage is measured with wiring harness connected. Accordingly, if voltage is abnormal, check wiring harness and controller, too, for another cause of trouble, and then judge.		
	3	Disconnection in wiring harness (Disconnection in wiring or defective contact in connector)	★ Prepare with starting switch OFF, then carry out troubleshooting without turning starting switch ON.		
			Wiring harness between STC1 (female) (21) – TOP (female) (A)	Resistance	Max. 1 Ω
			Wiring harness between STC1 (female) (16) – TOP (female) (B)	Resistance	Max. 1 Ω
			Wiring harness between STC1 (female) (14) – TOP (female) (C)	Resistance	Max. 1 Ω
	4	Ground fault in wiring harness (Contact with GND circuit)	★ Prepare with starting switch OFF, then carry out troubleshooting without turning starting switch ON.		
			Wiring harness between STC1 (female) (16) – TOP (female) (B) or circuit branch end	Resistance	Min. 1 MΩ
			Wiring harness between STC1 (female) (14) – TOP (female) (C) and chassis ground	Resistance	Min. 1 MΩ
	5	Defective power train controller	If causes 1 – 4 are not detected, power train controller may be defective. (Since trouble is in system, troubleshooting cannot be carried out.)		

Circuit diagram related to torque converter outlet pressure sensor

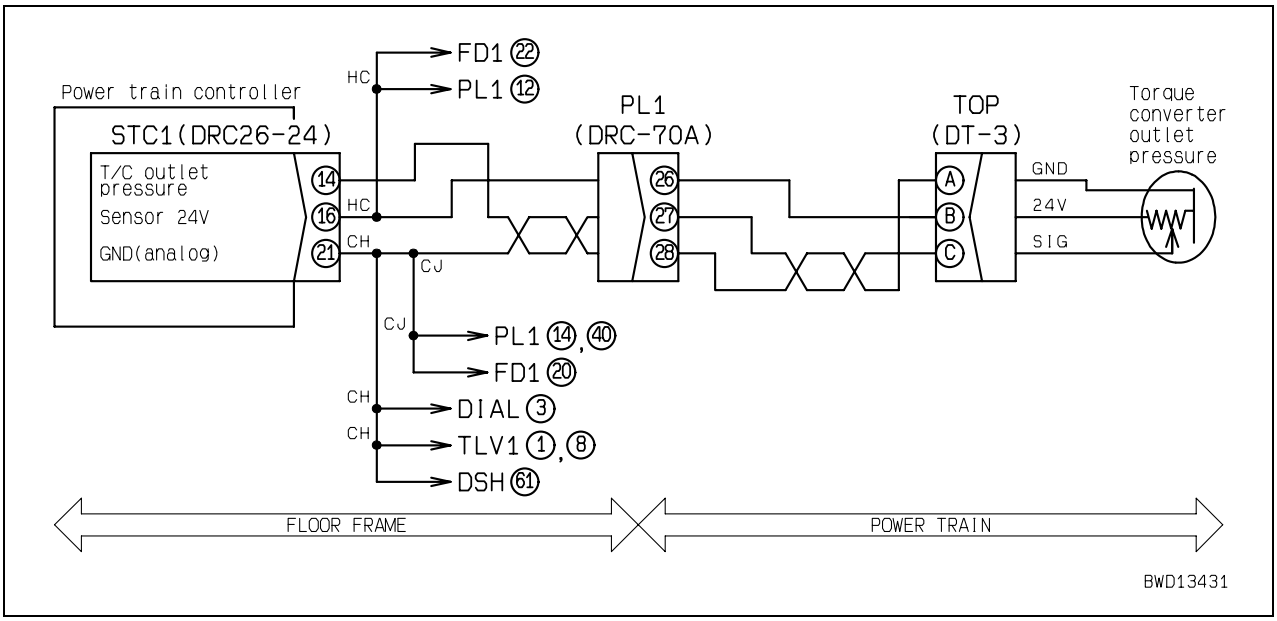

Failure code [DHT7KB] T/C out-pressure sensor: Short circuit

Action code	Failure code	Trouble	T/C out-pressure sensor: Short circuit (Power train controller system)
E02	**DHT7KB**		
Contents of trouble	• Signal voltage of torque converter outlet pressure sensor is above 6.0 V.		
Action of controller	• Limits operation of engine and transmission.		
Problem that appears on machine	• Torque converter outlet pressure cannot be monitored. • Once machine is stopped, engine speed is limited to medium (half). • Once machine is stopped, travel is limited to F1 and R1.		
Related information	• State of torque converter outlet pressure sensor can be checked with monitoring function. (Code: 32604 T/C Out Pressure Sensor) • Method of reproducing failure code: Turn starting switch ON.		

	Cause		Standard value in normal state/Remarks on troubleshooting		
Possible causes and standard value in normal state	1	Defective sensor 24 V power supply system	If failure code [**DBE6KK**] is also displayed, carry out troubleshooting for it first.		
	2	Defective torque converter outlet pressure sensor (Internal trouble)	★ Prepare with starting switch OFF, then turn starting switch ON or start engine and carry out troubleshooting in each case.		
			TOP		Voltage
			Between (B) – (A)	Power supply	20 – 30 V
			Between (C) – (A)	Signal	0.5 – 6.0 V
			Sensor voltage is measured with wiring harness connected. Accordingly, if voltage is abnormal, check wiring harness and controller, too, for another cause of trouble, and then judge.		
	3	Hot short (Short circuit with 24V circuit) in wiring harness	★ Prepare with starting switch OFF, then turn starting switch ON and carry out troubleshooting.		
			Wiring harness between STC1 (female) (21) – TOP (female) (A) or circuit branch end	Voltage	Max. 1 V
			Wiring harness between STC1 (female) (14) – TOP (female) (C) and chassis ground	Voltage	Max. 1 V
	4	Defective power train controller	If causes 1 – 3 are not detected, power train controller may be defective. (Since trouble is in system, troubleshooting cannot be carried out.)		

Circuit diagram related to torque converter outlet pressure sensor

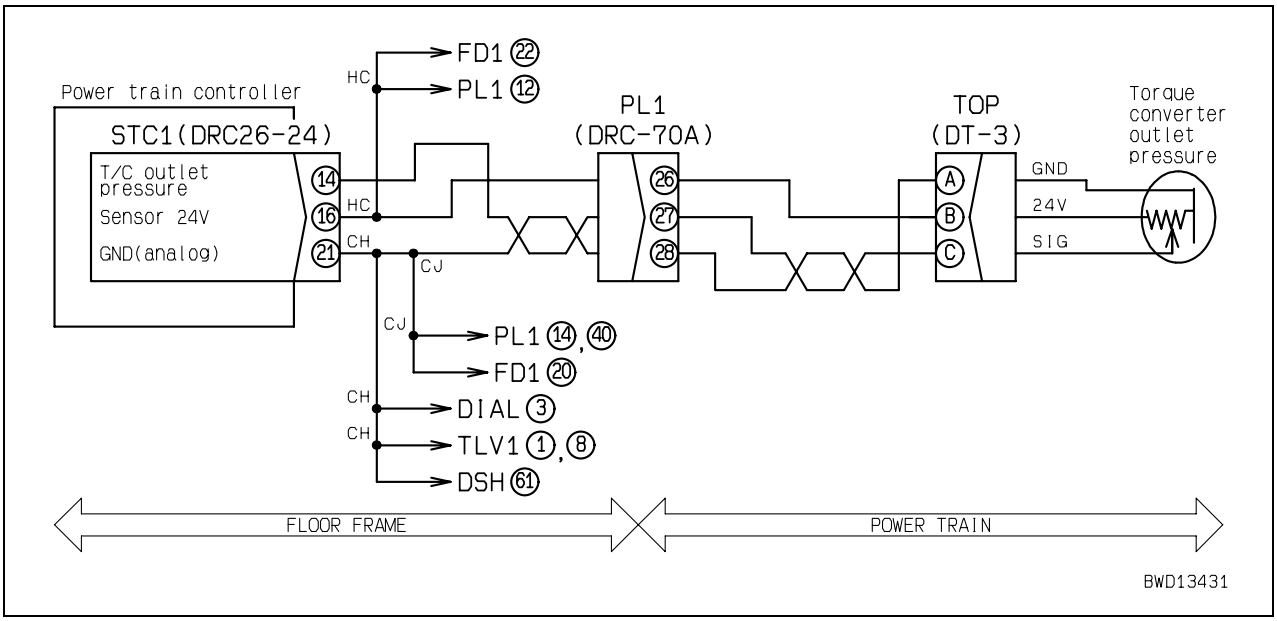

Failure code [DK10KX] Fuel control Dial: Out of normal range

Action code	Failure code	Trouble	Fuel control Dial: Out of normal range (Power train controller system)
E03	**DK10KX**		
Contents of trouble	• Signal voltage of fuel control dial is out of normal range.		
Action of controller	• Continues control with signal of decelerator pedal potentiometer. • Limits operation of engine and transmission.		
Problem that appears on machine	• Once machine is stopped, engine speed is limited to medium (half). • Once machine is stopped, travel is limited to F1 and R1.		
Related information	• State of fuel control dial signal can be checked with monitoring function. (Code: 03000 Fuel Dial Sensor) • Method of reproducing failure code: Turn starting switch ON.		

	Cause		Standard value in normal state/Remarks on troubleshooting			
Possible causes and standard value in normal state	1	Defective sensor 5V power supply system	If failure code [**DBE7KK**] is also displayed, carry out troubleshooting for it first.			
	2	Defective fuel control dial (Internal disconnection or short circuit)	★ Prepare with starting switch OFF, then carry out troubleshooting without turning starting switch ON.			
			DIAL (male)	Resistance		
			Between (1) – (3)	4.0 – 6.0 kΩ		
			Between (1) – (2)	0.25 – 7.0 kΩ		
			Between (2) – (3)	0.25 – 7.0 kΩ		
	3	Disconnection in wiring harness (Disconnection in wiring or defective contact in connector)	★ Prepare with starting switch OFF, then carry out troubleshooting without turning starting switch ON.			
			Wiring harness between STC1 (female) (22) – DIAL (female) (1)	Resistance	Max. 1 Ω	
			Wiring harness between STC1 (female) (1) – DIAL (female) (2)	Resistance	Max. 1 Ω	
			Wiring harness between STC1 (female) (21) – DIAL (female) (3)	Resistance	Max. 1 Ω	
	4	Ground fault in wiring harness (Contact with GND circuit)	★ Prepare with starting switch OFF, then carry out troubleshooting without turning starting switch ON.			
			Wiring harness between STC1 (female) (22) – DIAL (female) (1) or circuit branch end and chassis ground	Resistance	Min. 1 MΩ	
			Wiring harness between STC1 (female) (1) – DIAL (female) (2) and chassis ground	Resistance	Min. 1 MΩ	
	5	Hot short (Short circuit with 24V circuit) in wiring harness	★ Prepare with starting switch OFF, then turn starting switch ON and carry out troubleshooting.			
			Wiring harness between STC1 (female) (22) – DIAL (female) (1) or circuit branch end and chassis ground	Voltage	Max. 1 V	
			Wiring harness between STC1 (female) (1) – DIAL (female) (2) and chassis ground	Voltage	Max. 1 V	
			Wiring harness between STC1 (female) (21) – DIAL (female) (3) or circuit branch end and chassis ground	Voltage	Max. 1 V	
	6	Defective power train controller	★ Prepare with starting switch OFF, then turn starting switch ON and carry out troubleshooting.			
			STC1	Voltage		
			Between (22) – (21)	4.6 – 5.4 V		
			Between (1) – (21)	0.5 – 4.5 V		

Circuit diagram related to fuel control dial

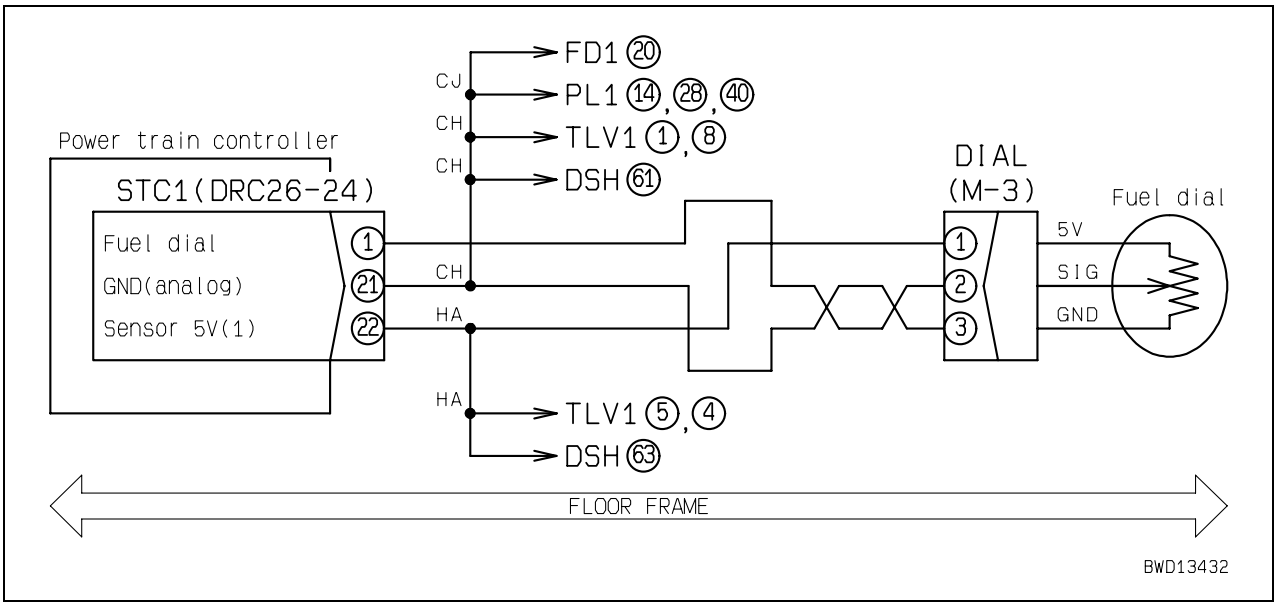

D155AX-6 Bulldozer

Form No. SEN00720-01

© 2006 KOMATSU
All Rights Reserved
Printed in Japan 05-06 (02)

BULLDOZER

D155AX-6

Machine model	Serial number
D155AX-6	80001 and up

40 Troubleshooting

Troubleshooting by failure and error codes, Part 6

Troubleshooting by failure and error codes, Part 6 4
Failure code [DK30KA] ST lever 1: Disconnection 4
Failure code [DK30KB] ST lever 1: Short circuit 6
Failure code [DK30KX] ST lever 1: Out of normal range 8
Failure code [DK30KZ] RL lever: Disconnection or short circuit 8
Failure code [DK30L8] ST lever: Signal mismatch 9
Failure code [DK31KA] ST lever 2: Disconnection 10
Failure code [DK31KB] ST lever 2: Short circuit 12
Failure code [DK40KA] Brake potentiometer: Disconnection 14
Failure code [DK40KB] Brake potentiometer: Short circuit 16
Failure code [DK55KX] FR lever: Out of normal range 18
Failure code [DK55KZ] FR lever: Disconnection or short circuit 18
Failure code [DK55L8] FR lever: Signal mismatch 19
Failure code [DK56KA] FR lever 1: Disconnection 20

Failure code [DK56KB] FR lever 1: Short circuit 22
Failure code [DK57KA] FR lever 2: Disconnection 24
Failure code [DK57KB] FR lever 2: Short circuit 26
Failure code [DKH1KA] Pitch angle sensor: Disconnection 28
Failure code [DKH1KB] Pitch angle sensor: Short circuit 30
Failure code [DLT3KA] T/M out-speed sensor: Disconnection 32
Failure code [DLT3KB] T/M out-speed sensor: Abnormal 33
Failure code [DW7BKA] Fan rev EPC: Disconnection 34
Failure code [DW7BKB] Fan rev EPC: Short circuit 35
Failure code [DWN1KA] Hss EPC1: Disconnection 36
Failure code [DWN1KB] Hss EPC1: Short circuit 37
Failure code [DWN1KY] Hss EPC1: Short circuit 38
Failure code [DWN2KA] Hss EPC2: Disconnection 39
Failure code [DWN2KB] Hss EPC2: Short circuit 40
Failure code [DWN2KY] Hss EPC2: Short circuit 41
Failure code [DWN3KA] Ssp solenoid: Disconnection 42
Failure code [DWN3KB] Ssp solenoid: Short circuit 44
Failure code [DWN3KY] Ssp solenoid: Short circuit 46
Failure code [DWN5KA] Fan pump solenoid: Disconnection 48
Failure code [DWN5KB] Fan pump solenoid: Short circuit 49
Failure code [DXA0KA] TVC Sol.: Disconnection 50
Failure code [DXA0KB] TVC Sol.: Short circuit 51
Failure code [DXA0KY] TVC Sol.: Short circuit 52
Failure code [DXH1KA] Lock-up ECMV: Disconnection 54
Failure code [DXH1KB] Lock-up ECMV: Short circuit 56
Failure code [DXH1KY] Lock-up ECMV: Short circuit 58
Failure code [DXH4KA] 1st clutch ECMV: Disconnection 60

Troubleshooting by failure and error codes, Part 6

Failure code [DK30KA] ST lever 1: Disconnection

Action code	Failure code	Trouble	ST lever1: Disconnection (Power train controller system)
E03	**DK30KA**		
Contents of trouble	• Signal voltage of PCCS lever steering potentiometer 1 system is below 0.5 V.		
Action of controller	• Continues control with signal of PCCS lever steering potentiometer 2 system. • Limits operation of engine and transmission.		
Problem that appears on machine	• Once machine is stopped, engine speed is limited to medium (half). • Once machine is stopped, travel is limited to F1 and R1.		
Related information	• State of PCCS lever steering potentiometer 1 signal can be checked with monitoring function. (Code: 50300 S/T Lever 1 Potentio) • Method of reproducing failure code: Turn starting switch ON + Operate PCCS lever (in steering direction).		

	Cause		Standard value in normal state/Remarks on troubleshooting			
Possible causes and standard value in normal state	1	Defective sensor 5V power supply system	If failure code [**DBE7KK**] is also displayed, carry out troubleshooting for it first.			
	2	Defective PCCS lever steering potentiometer 1 (Internal disconnection)	★ Prepare with starting switch OFF, then carry out troubleshooting without turning starting switch ON.			
			TLV1 (male)	PCCS lever	Resistance	
			Between (5) – (8)	Neutral	3.2 kΩ ± 20%	
			Between (5) – (7)		1.6 kΩ ± 20%	
			Between (7) – (8)		1.6 kΩ ± 20%	
	3	Disconnection in wiring harness (Disconnection in wiring or defective contact in connector)	★ Prepare with starting switch OFF, then carry out troubleshooting without turning starting switch ON.			
			Wiring harness between STC1 (female) (22) – TLV1 (female) (5)		Resistance	Max. 1 Ω
			Wiring harness between STC1 (female) (2) – TLV1 (female) (7)		Resistance	Max. 1 Ω
	4	Ground fault in wiring harness (Contact with GND circuit)	★ Prepare with starting switch OFF, then carry out troubleshooting without turning starting switch ON.			
			Wiring harness between STC1 (female) (2) – TLV1 (female) (7) and chassis ground		Resistance	Min. 1 MΩ
	5	Defective power train controller	★ Prepare with starting switch OFF, then turn starting switch ON and carry out troubleshooting.			
			STC1	Voltage		
			Between (2) – (21)	0.5 – 4.5 V		

Circuit diagram related to PCCS lever potentiometer

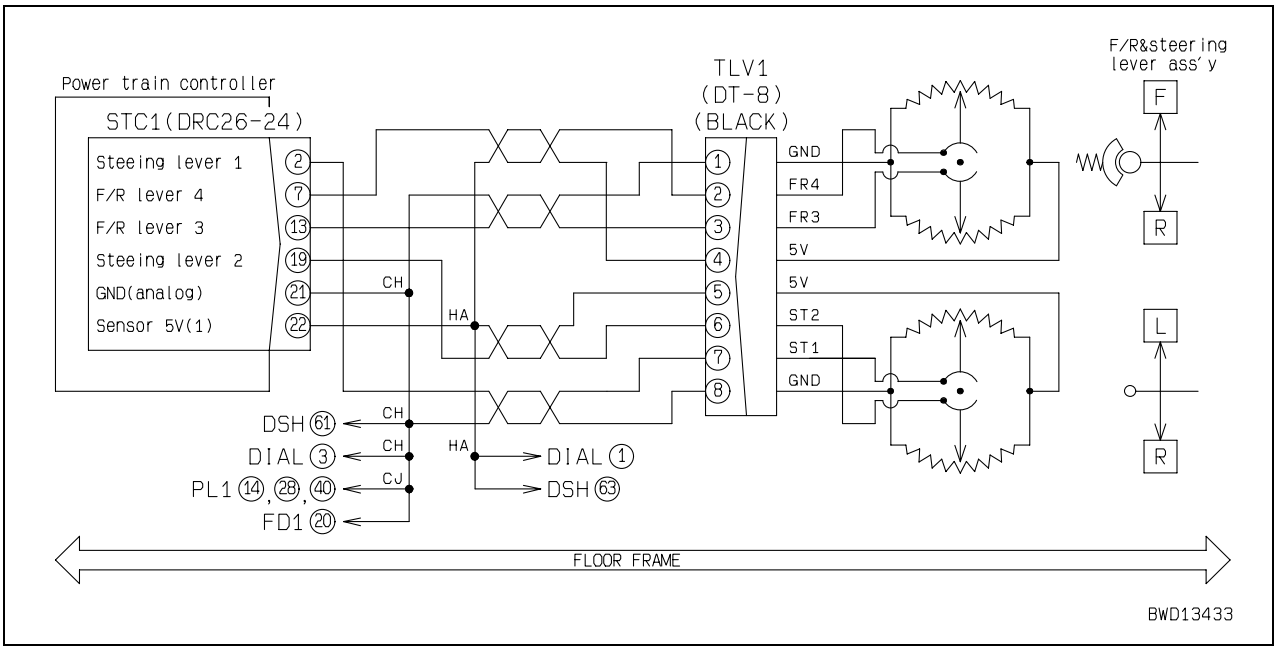

Failure code [DK30KB] ST lever 1: Short circuit

Action code	Failure code	Trouble	ST lever1: Short circuit (Power train controller system)
E03	**DK30KB**		
Contents of trouble	• Signal voltage of PCCS lever steering potentiometer 1 system is above 4.5 V.		
Action of controller	• Continues control with signal of PCCS lever steering potentiometer 2 system. • Limits operation of engine and transmission.		
Problem that appears on machine	• Once machine is stopped, engine speed is limited to medium (half). • Once machine is stopped, travel is limited to F1 and R1.		
Related information	• State of PCCS lever steering potentiometer 1 signal can be checked with monitoring function. (Code: 50300 S/T Lever 1 Potentio) • Method of reproducing failure code: Turn starting switch ON + Operate PCCS lever (in steering direction).		

	Cause		Standard value in normal state/Remarks on troubleshooting			
Possible causes and standard value in normal state	1	Defective sensor 5V power supply system	If failure code [**DBE7KK**] is also displayed, carry out troubleshooting for it first.			
	2	Defective PCCS lever steering potentiometer 1 (Internal short circuit)	★ Prepare with starting switch OFF, then carry out troubleshooting without turning starting switch ON.			
			TLV1 (male)	PCCS lever	Resistance	
			Between (5) – (8)	Neutral	3.2 kΩ ± 20%	
			Between (5) – (7)		1.6 kΩ ± 20%	
			Between (7) – (8)		1.6 kΩ ± 20%	
	3	Hot short (Short circuit with 24V circuit) in wiring harness	★ Prepare with starting switch OFF, then turn starting switch ON and carry out troubleshooting.			
			Wiring harness between STC1 (female) (2) – TLV1 (female) (7) and chassis ground		Voltage	Max. 1 V
	4	Defective power train controller	★ Prepare with starting switch OFF, then turn starting switch ON and carry out troubleshooting.			
			STC1		Voltage	
			Between (2) – (21)		0.5 – 4.5 V	

Circuit diagram related to PCCS lever potentiometer

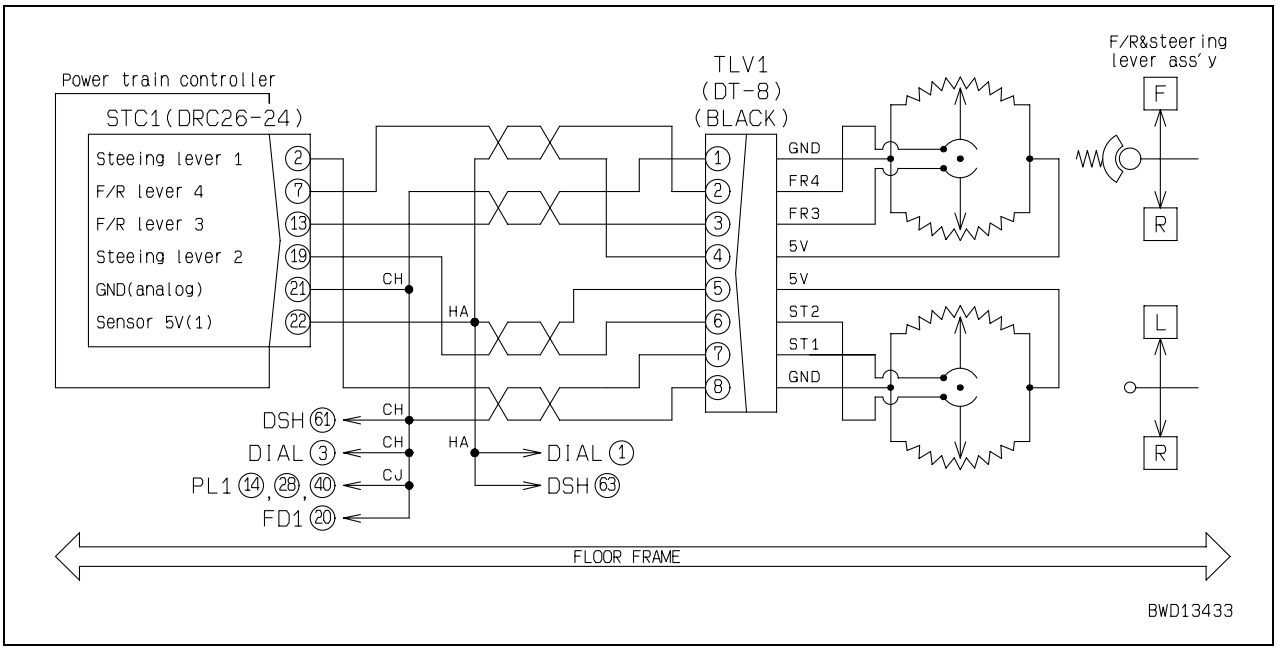

Failure code [DK30KX] ST lever 1: Out of normal range

Action code	Failure code	Trouble	ST lever 1: Out of normal range (Power train controller system)
E04	**DK30KX**		
Contents of trouble	• In PCCS lever steering potentiometer 1 and 2 systems, either of failure codes [**DK30KA**] and [**DK30KB**] and either of failure codes [**DK31KA**] and [**DK31KB**] occurred simultaneously.		
Action of controller	• Limits operation of engine and transmission.		
Problem that appears on machine	• Once machine is stopped, engine speed is limited to medium (half). • Once machine is stopped, travel is limited to F1 and R1.		
Related information	• State of PCCS lever steering potentiometer signal can be checked with monitoring function. (Code: 50300 S/T Lever 1 Potentio) (Code: 50301 S/T Lever 2 Potentio) • Method of reproducing failure code: Turn starting switch ON + Operate PCCS lever (in steering direction).		

Possible causes and standard value in normal state	Cause	Standard value in normal state/Remarks on troubleshooting
	Carry out troubleshooting for failure codes [**DK30KA**], [**DK30KB**], [**DK31KA**], and [**DK31KB**].	

Failure code [DK30KZ] RL lever: Disconnection or short circuit

Action code	Failure code	Trouble	ST lever: Disconnection or short circuit (Power train controller system)
E04	**DK30KZ**		
Contents of trouble	• In PCCS lever steering potentiometer 1 and 2 systems, when starting switch is turned ON, only either side is abnormal and then either of failure codes [**DK30KA**] and [**DK30KB**] and either of failure codes [**DK31KA**] and [**DK31KB**] occurred simultaneously.		
Action of controller	• Limits operation of engine and transmission.		
Problem that appears on machine	• Once machine is stopped, engine speed is limited to medium (half). • Once machine is stopped, it cannot travel at all.		
Related information	• State of PCCS lever steering potentiometer signal can be checked with monitoring function. (Code: 50300 S/T Lever 1 Potentio) (Code: 50301 S/T Lever 2 Potentio) • Method of reproducing failure code: Turn starting switch ON + Operate PCCS lever (in steering direction).		

Possible causes and standard value in normal state	Cause	Standard value in normal state/Remarks on troubleshooting
	Carry out troubleshooting for failure codes [**DK30KA**], [**DK30KB**], [**DK31KA**], and [**DK31KB**].	

Failure code [DK30L8] ST lever: Signal mismatch

Action code	Failure code	Trouble	ST lever: Signal mismatch (Power train controller system)
E03	**DK30L8**		
Contents of trouble	• In PCCS lever steering potentiometer 1 and 2 systems, total of both signal voltages is below 4.41 V or above 5.59 V.		
Action of controller	• Continues control with signal of normal one of PCCS lever steering potentiometer 1 and 2 systems. • Limits operation of engine and transmission.		
Problem that appears on machine	• Once machine is stopped, engine speed is limited to medium (half). • Once machine is stopped, travel is limited to F1 and R1.		
Related information	• State of PCCS lever steering potentiometer signal can be checked with monitoring function. (Code: 50300 S/T Lever 1 Potentio) (Code: 50301 S/T Lever 2 Potentio) • Method of reproducing failure code: Turn starting switch ON + Operate PCCS lever (in steering direction).		

Possible causes and standard value in normal state	Cause	Standard value in normal state/Remarks on troubleshooting
	Carry out troubleshooting for failure codes [**DK30KA**], [**DK30KB**], [**DK31KA**], and [**DK31KB**].	

Failure code [DK31KA] ST lever 2: Disconnection

Action code	Failure code	Trouble	ST lever 2: Disconnection (Power train controller system)
E03	**DK31KA**		
Contents of trouble	• Signal voltage of PCCS lever steering potentiometer 2 system is below 0.5 V.		
Action of controller	• Continues control with signal of PCCS lever steering potentiometer 1 system. • Limits operation of engine and transmission.		
Problem that appears on machine	• Once machine is stopped, engine speed is limited to medium (half). • Once machine is stopped, travel is limited to F1 and R1.		
Related information	• State of PCCS lever steering potentiometer 2 signal can be checked with monitoring function. (Code: 50301 S/T Lever 2 Potentio) • Method of reproducing failure code: Turn starting switch ON + Operate PCCS lever (in steering direction).		

	Cause		Standard value in normal state/Remarks on troubleshooting			
Possible causes and standard value in normal state	1	Defective sensor 5V power supply system	If failure code [**DBE7KK**] is also displayed, carry out troubleshooting for it first.			
	2	Defective PCCS lever steering potentiometer 2 (Internal disconnection)	★ Prepare with starting switch OFF, then carry out troubleshooting without turning starting switch ON.			
			TLV1 (male)	PCCS lever	Resistance	
			Between (5) – (8)	Neutral	3.2 kΩ ± 20%	
			Between (5) – (6)		1.6 kΩ ± 20%	
			Between (6) – (8)		1.6 kΩ ± 20%	
	3	Disconnection in wiring harness (Disconnection in wiring or defective contact in connector)	★ Prepare with starting switch OFF, then carry out troubleshooting without turning starting switch ON.			
			Wiring harness between STC1 (female) (22) – TLV1 (female) (5)		Resistance	Max. 1 Ω
			Wiring harness between STC1 (female) (19) – TLV1 (female) (6)		Resistance	Max. 1 Ω
	4	Ground fault in wiring harness (Contact with GND circuit)	★ Prepare with starting switch OFF, then carry out troubleshooting without turning starting switch ON.			
			Wiring harness between STC1 (female) (19) – TLV1 (female) (6) and chassis ground		Resistance	Min. 1 MΩ
	5	Defective power train controller	★ Prepare with starting switch OFF, then turn starting switch ON and carry out troubleshooting.			
			STC1		Voltage	
			Between (19) – (21)		0.5 – 4.5 V	

Circuit diagram related to PCCS lever potentiometer

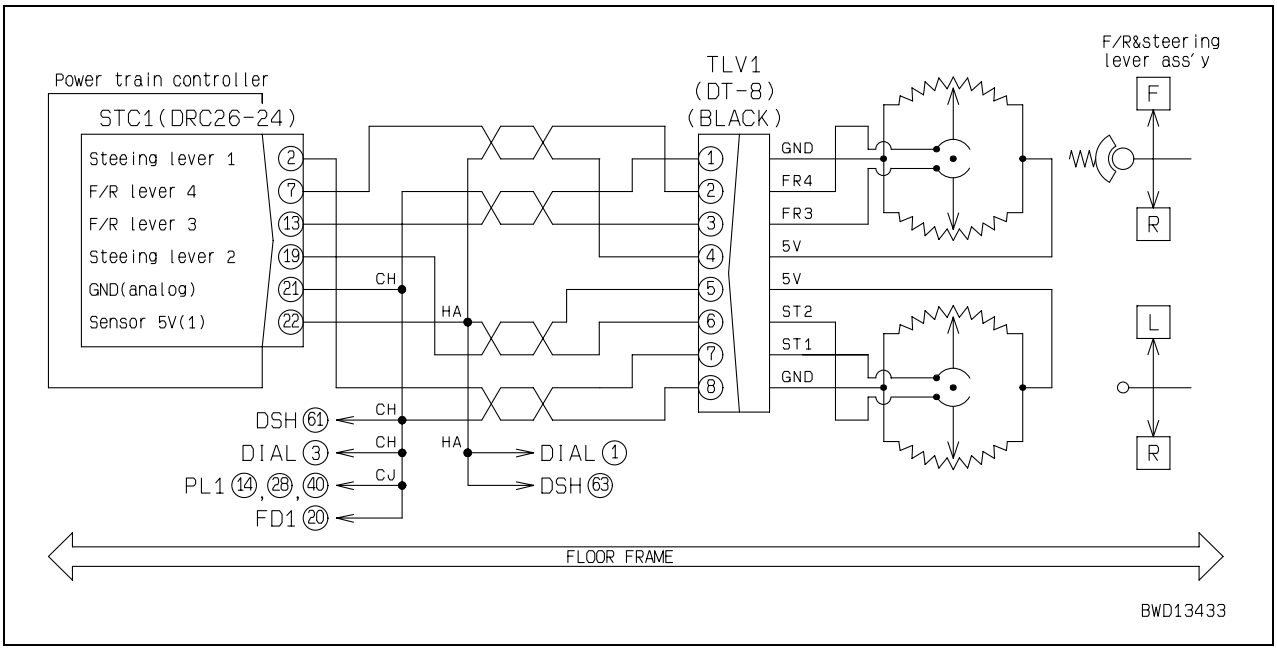

Failure code [DK31KB] ST lever 2: Short circuit

Action code	Failure code	Trouble	ST lever 2: Short circuit (Power train controller system)
E03	**DK31KB**		
Contents of trouble	• Signal voltage of PCCS lever steering potentiometer 2 system is above 4.5 V.		
Action of controller	• Continues control with signal of PCCS lever steering potentiometer 1 system. • Limits operation of engine and transmission.		
Problem that appears on machine	• Once machine is stopped, engine speed is limited to medium (half). • Once machine is stopped, travel is limited to F1 and R1.		
Related information	• State of PCCS lever steering potentiometer 2 signal can be checked with monitoring function. (Code: 50301 S/T Lever 2 Potentio) • Method of reproducing failure code: Turn starting switch ON + Operate PCCS lever (in steering direction).		

	Cause		Standard value in normal state/Remarks on troubleshooting			
Possible causes and standard value in normal state	1	Defective sensor 5V power supply system	If failure code [**DBE7KK**] is also displayed, carry out troubleshooting for it first.			
	2	Defective PCCS lever steering potentiometer 2 (Internal short circuit)	★ Prepare with starting switch OFF, then carry out troubleshooting without turning starting switch ON.			
			TLV1 (male)	PCCS lever	Resistance	
			Between (5) – (8)	Neutral	3.2 kΩ ± 20%	
			Between (5) – (6)		1.6 kΩ ± 20%	
			Between (6) – (8)		1.6 kΩ ± 20%	
	3	Hot short (Short circuit with 24V circuit) in wiring harness	★ Prepare with starting switch OFF, then turn starting switch ON and carry out troubleshooting.			
			Wiring harness between STC1 (female) (19) – TLV1 (female) (6) and chassis ground		Voltage	Max. 1 V
	4	Defective power train controller	★ Prepare with starting switch OFF, then turn starting switch ON and carry out troubleshooting.			
			STC1		Voltage	
			Between (19) – (21)		0.5 – 4.5 V	

Circuit diagram related to PCCS lever potentiometer

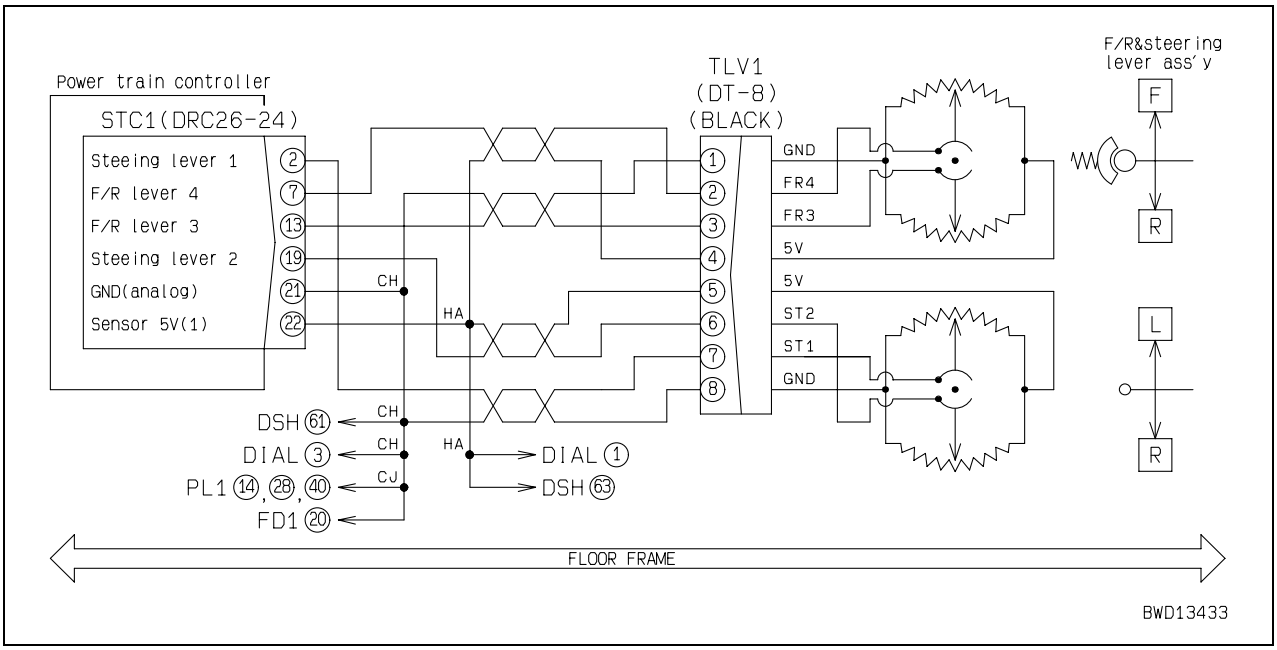

Failure code [DK40KA] Brake potentiometer: Disconnection

Action code	Failure code	Trouble	Brake potentiometer: Disconnection (Power train controller system)
E03	**DK40KA**		
Contents of trouble	• Signal voltage of brake pedal potentiometer is below 0.5 V.		
Action of controller	• Cannot recognize brake pedal position.		
Problem that appears on machine	• Auto shift-down function may not operate normally.		
Related information	• State of brake pedal potentiometer signal can be checked with monitoring function. (Code: 50400 Brake Pedal Potentio) • Method of reproducing failure code: Turn starting switch ON + Operate brake pedal.		

	Cause		Standard value in normal state/Remarks on troubleshooting		
Possible causes and standard value in normal state	1	Defective sensor 5V power supply system	If failure code [**DBE7KK**] is also displayed, carry out troubleshooting for it first.		
	2	Defective brake pedal potentiometer (Internal disconnection)	★ Prepare with starting switch OFF, then carry out troubleshooting without turning starting switch ON.		
			BRK (male)	Resistance	
			Between (A) – (C)	4.0 – 6.0 kΩ	
			Between (A) – (B)	0.25 – 7.0 kΩ	
			Between (B) – (C)	0.25 – 7.0 kΩ	
	3	Disconnection in wiring harness (Disconnection in wiring or defective contact in connector)	★ Prepare with starting switch OFF, then carry out troubleshooting without turning starting switch ON.		
			Wiring harness between STC1 (female) (21) – BRK (female) (A)	Resistance	Max. 1 Ω
			Wiring harness between STC1 (female) (3) – BRK (female) (B)	Resistance	Max. 1 Ω
			Wiring harness between STC1 (female) (22) – BRK (female) (C)	Resistance	Max. 1 Ω
	4	Ground fault in wiring harness (Contact with GND circuit)	★ Prepare with starting switch OFF, then carry out troubleshooting without turning starting switch ON.		
			Wiring harness between STC1 (female) (3) – BRK (female) (B) and chassis ground	Resistance	Min. 1 MΩ
			Wiring harness between STC1 (female) (22) – BRK (female) (C) or circuit branch end and chassis ground	Resistance	Min. 1 MΩ
	5	Defective power train controller	★ Prepare with starting switch OFF, then turn starting switch ON and carry out troubleshooting.		
			STC1	Voltage	
			Between (3) – (21)	0.5 – 4.5 V	

Circuit diagram related to brake pedal potentiometer

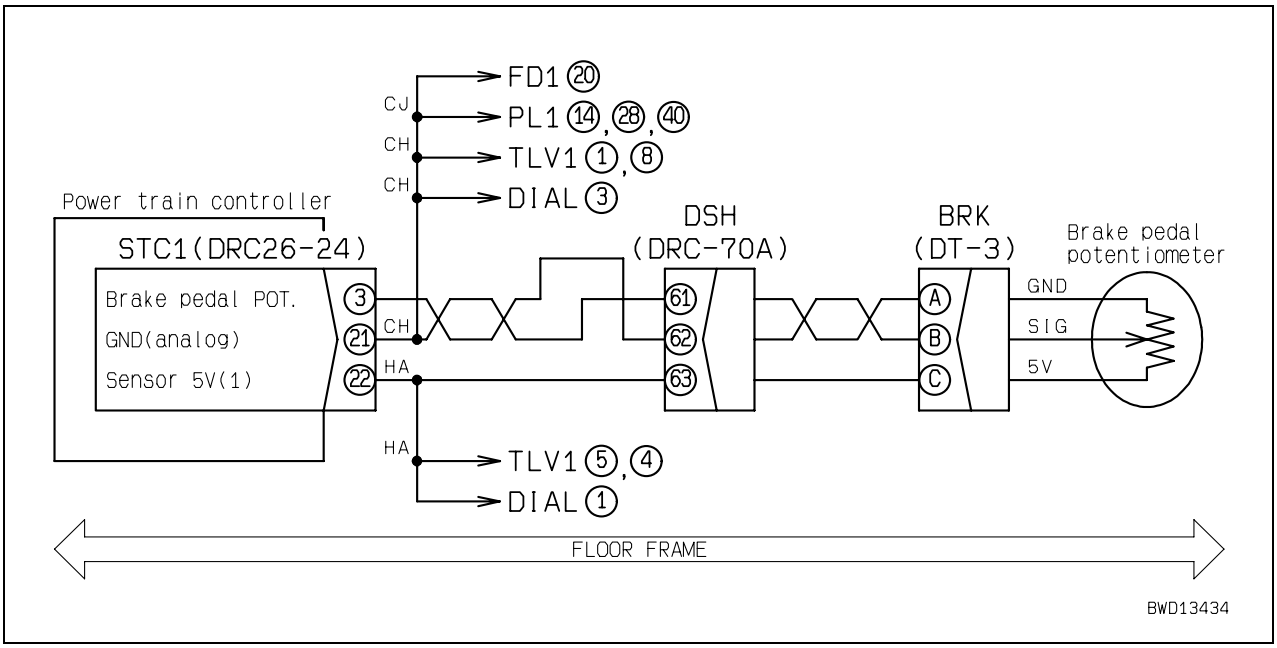

Failure code [DK40KB] Brake potentiometer: Short circuit

Action code	Failure code	Trouble	Brake potentiometer: Short circuit (Power train controller system)
E03	**DK40KB**		
Contents of trouble	• Signal voltage of brake pedal potentiometer is above 4.5 V.		
Action of controller	• Cannot recognize brake pedal position.		
Problem that appears on machine	• Auto shift-down function may not operate normally.		
Related information	• State of brake pedal potentiometer signal can be checked with monitoring function. (Code: 50400 Brake Pedal Potentio) • Method of reproducing failure code: Turn starting switch ON + Operate brake pedal.		

	Cause		Standard value in normal state/Remarks on troubleshooting			
Possible causes and standard value in normal state	1	Defective sensor 5V power supply system	If failure code [**DBE7KK**] is also displayed, carry out troubleshooting for it first.			
	2	Defective brake pedal potentiometer (Internal short circuit)	★ Prepare with starting switch OFF, then carry out troubleshooting without turning starting switch ON.			
			BRK (male)	Resistance		
			Between (A) – (C)	4.0 – 6.0 kΩ		
			Between (A) – (B)	0.25 – 7.0 kΩ		
			Between (B) – (C)	0.25 – 7.0 kΩ		
	3	Hot short (Short circuit with 24V circuit) in wiring harness	★ Prepare with starting switch OFF, then turn starting switch ON and carry out troubleshooting.			
			Wiring harness between STC1 (female) (3) – BRK (female) (B) and chassis ground		Voltage	Max. 1 V
			Wiring harness between STC1 (female) (22) – BRK (female) (C) or circuit branch end and chassis ground		Voltage	Max. 1 V
	4	Defective power train controller	★ Prepare with starting switch OFF, then turn starting switch ON and carry out troubleshooting.			
			STC1	Voltage		
			Between (3) – (21)	0.5 – 4.5 V		

Circuit diagram related to brake pedal potentiometer

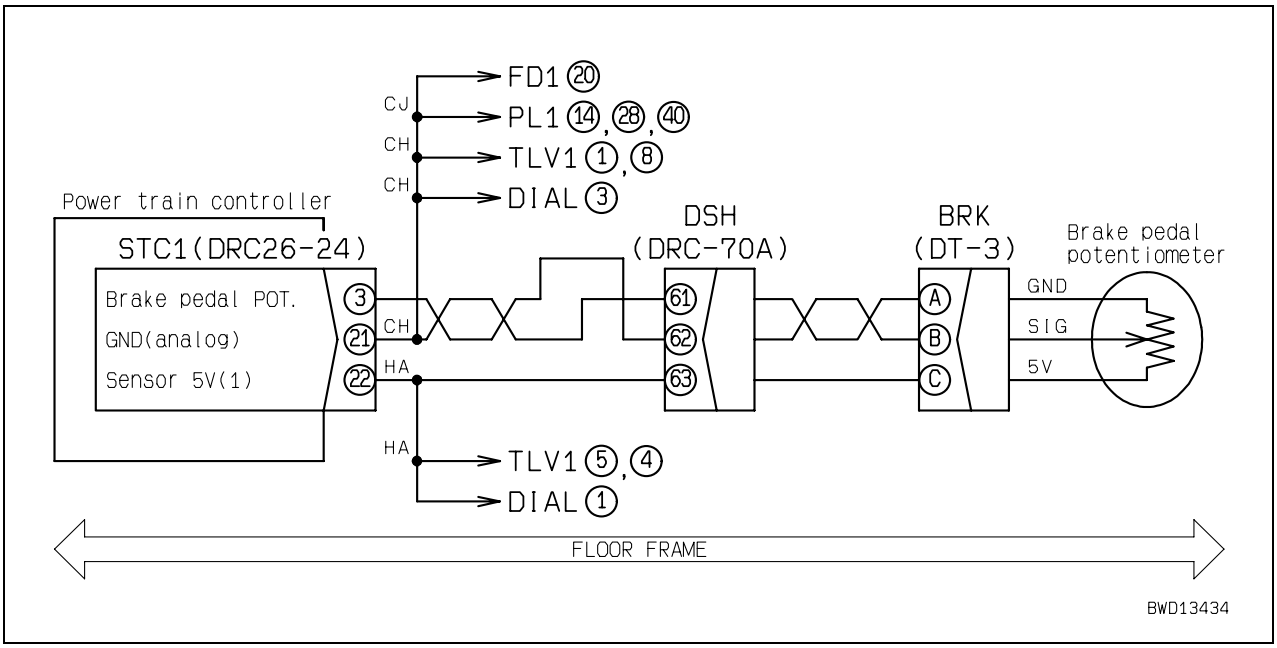

Failure code [DK55KX] FR lever: Out of normal range

Action code	Failure code	Trouble	FR lever 1: Out of normal range (Power train controller system)
E04	**DK55KX**		
Contents of trouble	• In PCCS lever F-R potentiometer 1 and 2 systems, either of failure codes [**DK56KA**] and [**DK56KB**] and either of failure codes [**DK57KA**] and [**DK57KB**] occurred simultaneously.		
Action of controller	• Limits operation of engine and transmission.		
Problem that appears on machine	• Once machine is stopped, engine speed is limited to medium (half). • Once machine is stopped, it cannot travel at all.		
Related information	• State of PCCS lever F-R potentiometer signal can be checked with monitoring function. (Code: 50200 T/M Lever 1 Potentio) (Code: 50201 T/M Lever 2 Potentio) • Method of reproducing failure code: Turn starting switch ON + Operate PCCS lever (in F-R direction).		

Possible causes and standard value in normal state	Cause	Standard value in normal state/Remarks on troubleshooting
	Carry out troubleshooting for failure codes [**DK56KA**], [**DK56KB**], [**DK57KA**], and [**DK57KB**].	

Failure code [DK55KZ] FR lever: Disconnection or short circuit

Action code	Failure code	Trouble	FR lever: Disconnection or short circuit (Power train controller system)
E04	**DK55KZ**		
Contents of trouble	• In PCCS lever F-R potentiometer 1 and 2 systems, when starting switch is turned ON, only either side is abnormal and then either of failure codes [**DK56KA**] and [**DK56KB**] and either of failure codes [**DK57KA**] and [**DK57KB**] occurred simultaneously.		
Action of controller	• Limits operation of engine and transmission.		
Problem that appears on machine	• Once machine is stopped, engine speed is limited to medium (half). • Once machine is stopped, it cannot travel at all.		
Related information	• State of PCCS lever F-R potentiometer signal can be checked with monitoring function. (Code: 50200 T/M Lever 1 Potentio) (Code: 50201 T/M Lever 2 Potentio) • Method of reproducing failure code: Turn starting switch ON + Operate PCCS lever (in F-R direction).		

Possible causes and standard value in normal state	Cause	Standard value in normal state/Remarks on troubleshooting
	Carry out troubleshooting for failure codes [**DK56KA**], [**DK56KB**], [**DK57KA**], and [**DK57KB**].	

Failure code [DK55L8] FR lever: Signal mismatch

Action code	Failure code	Trouble	FR lever: Signal mismatch (Power train controller system)
E03	**DK55L8**		
Contents of trouble	• In PCCS lever F-R potentiometer 1 and 2 systems, total of both signal voltages is below 4.41 V or above 5.59 V.		
Action of controller	• Continues control with signal of normal one of PCCS lever F-R potentiometer 1 and 2 systems. • Limits operation of engine and transmission.		
Problem that appears on machine	• Once machine is stopped, engine speed is limited to medium (half). • Once machine is stopped, travel is limited to F1 and R1.		
Related information	• State of PCCS lever F-R potentiometer signal can be checked with monitoring function. (Code: 50200 T/M Lever 1 Potentio) (Code: 50201 T/M Lever 2 Potentio) • Method of reproducing failure code: Turn starting switch ON + Operate PCCS lever (in F-R direction).		

Possible causes and standard value in normal state	Cause	Standard value in normal state/Remarks on troubleshooting
	Carry out troubleshooting for failure codes [**DK56KA**], [**DK56KB**], [**DK57KA**], and [**DK57KB**].	

Failure code [DK56KA] FR lever 1: Disconnection

Action code	Failure code	Trouble	FR lever 1: Disconnection (Power train controller system)
E03	**DK56KA**		
Contents of trouble	• Signal voltage of PCCS lever F-R potentiometer 1 system is below 0.5 V.		
Action of controller	• Continues control with signal of PCCS lever F-R potentiometer 2 system. • Limits operation of engine and transmission.		
Problem that appears on machine	• Once machine is stopped, engine speed is limited to medium (half). • Once machine is stopped, travel is limited to F1 and R1.		
Related information	• State of PCCS lever F-R potentiometer 1 signal can be checked with monitoring function. (Code: 50200 T/M Lever 1 Potentio) • Method of reproducing failure code: Turn starting switch ON + Operate PCCS lever (in F-R direction).		

	Cause		Standard value in normal state/Remarks on troubleshooting			
Possible causes and standard value in normal state	1	Defective sensor 5V power supply system	If failure code [**DBE7KK**] is also displayed, carry out troubleshooting for it first.			
	2	Defective PCCS lever F-R potentiometer 1 (Internal disconnection)	★ Prepare with starting switch OFF, then carry out troubleshooting without turning starting switch ON.			
			TLV1 (male)	PCCS lever	Resistance	
			Between (4) – (1)	Neutral	3.2 kΩ ± 20%	
			Between (4) – (3)		1.6 kΩ ± 20%	
			Between (3) – (1)		1.6 kΩ ± 20%	
	3	Disconnection in wiring harness (Disconnection in wiring or defective contact in connector)	★ Prepare with starting switch OFF, then carry out troubleshooting without turning starting switch ON.			
			Wiring harness between STC1 (female) (22) – TLV1 (female) (4)		Resistance	Max. 1 Ω
			Wiring harness between STC1 (female) (13) – TLV1 (female) (3)		Resistance	Max. 1 Ω
	4	Ground fault in wiring harness (Contact with GND circuit)	★ Prepare with starting switch OFF, then carry out troubleshooting without turning starting switch ON.			
			Wiring harness between STC1 (female) (13) – TLV1 (female) (3) and chassis ground		Resistance	Min. 1 MΩ
	5	Defective power train controller	★ Prepare with starting switch OFF, then turn starting switch ON and carry out troubleshooting.			
			STC1		Voltage	
			Between (13) – (21)		0.5 – 4.5 V	

Circuit diagram related to PCCS lever potentiometer

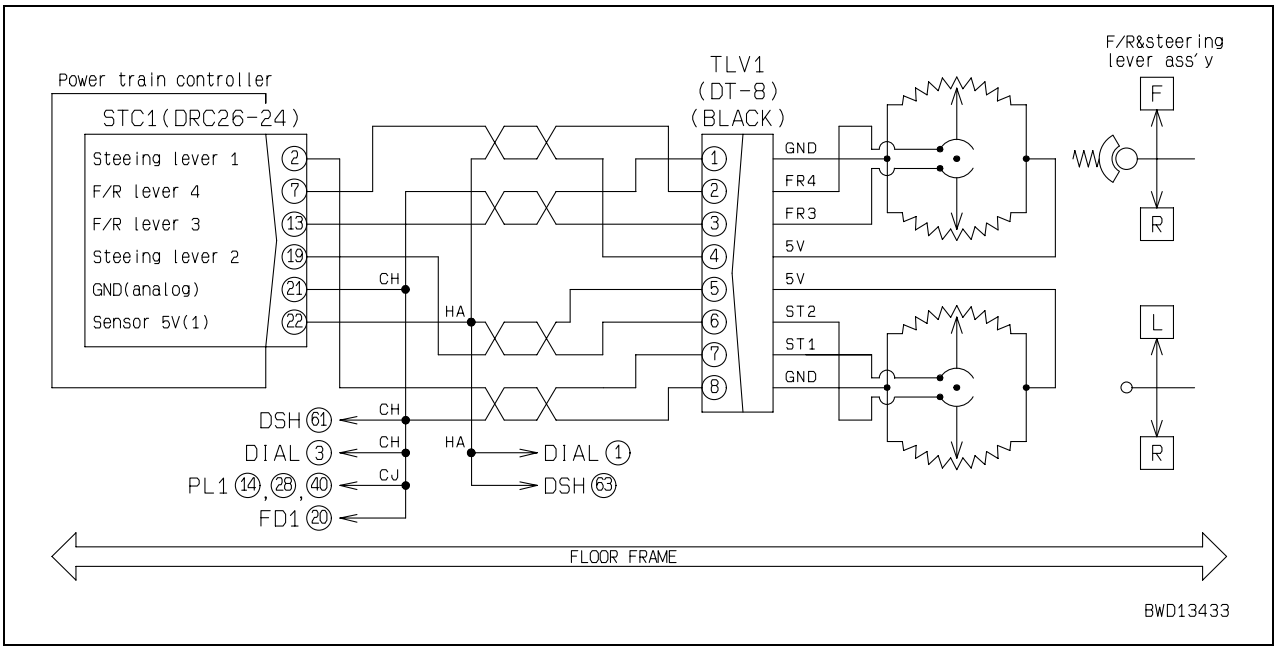

Failure code [DK56KB] FR lever 1: Short circuit

Action code	Failure code	Trouble	FR lever 1: Short circuit (Power train controller system)
E03	**DK56KB**		
Contents of trouble	• Signal voltage of PCCS lever F-R potentiometer 1 system is above 4.5 V.		
Action of controller	• Continues control with signal of PCCS lever F-R potentiometer 2 system. • Limits operation of engine and transmission.		
Problem that appears on machine	• Once machine is stopped, engine speed is limited to medium (half). • Once machine is stopped, travel is limited to F1 and R1.		
Related information	• State of PCCS lever F-R potentiometer 1 signal can be checked with monitoring function. (Code: 50200 T/M Lever 1 Potentio) • Method of reproducing failure code: Turn starting switch ON + Operate PCCS lever (in F-R direction).		

	Cause		Standard value in normal state/Remarks on troubleshooting			
Possible causes and standard value in normal state	1	Defective sensor 5V power supply system	If failure code [**DBE7KK**] is also displayed, carry out troubleshooting for it first.			
	2	Defective PCCS lever F-R potentiometer 1 (Internal short circuit)	★ Prepare with starting switch OFF, then carry out troubleshooting without turning starting switch ON.			
			TLV1 (male)	PCCS lever	Resistance	
			Between (4) – (1)	Neutral	3.2 kΩ ± 20%	
			Between (4) – (3)		1.6 kΩ ± 20%	
			Between (3) – (1)		1.6 kΩ ± 20%	
	3	Hot short (Short circuit with 24V circuit) in wiring harness	★ Prepare with starting switch OFF, then turn starting switch ON and carry out troubleshooting.			
			Wiring harness between STC1 (female) (13) – TLV1 (female) (3) and chassis ground		Voltage	Max. 1 V
	4	Defective power train controller	★ Prepare with starting switch OFF, then turn starting switch ON and carry out troubleshooting.			
			STC1		Voltage	
			Between (13) – (21)		0.5 – 4.5 V	

Circuit diagram related to PCCS lever potentiometer

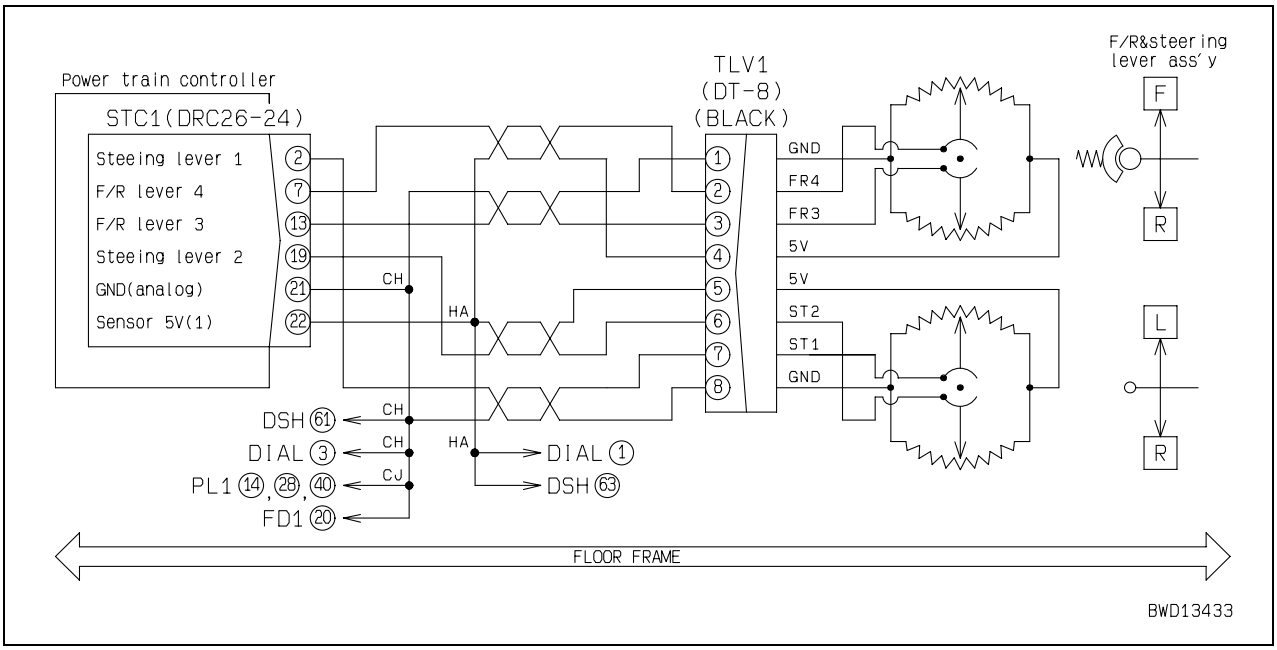

Failure code [DK57KA] FR lever 2: Disconnection

Action code	Failure code	Trouble	FR lever 2: Disconnection (Power train controller system)
E03	**DK57KA**		
Contents of trouble	• Signal voltage of PCCS lever F-R potentiometer 2 system is below 0.5 V.		
Action of controller	• Continues control with signal of PCCS lever F-R potentiometer 1 system. • Limits operation of engine and transmission.		
Problem that appears on machine	• Once machine is stopped, engine speed is limited to medium (half). • Once machine is stopped, travel is limited to F1 and R1.		
Related information	• State of PCCS lever F-R potentiometer 2 signal can be checked with monitoring function. (Code: 50201 T/M Lever 2 Potentio) • Method of reproducing failure code: Turn starting switch ON + Operate PCCS lever (in F-R direction).		

	Cause		Standard value in normal state/Remarks on troubleshooting			
Possible causes and standard value in normal state	1	Defective sensor 5V power supply system	If failure code [**DBE7KK**] is also displayed, carry out troubleshooting for it first.			
	2	Defective PCCS lever F-R potentiometer 2 (Internal disconnection)	★ Prepare with starting switch OFF, then carry out troubleshooting without turning starting switch ON.			
			TLV1 (male)	PCCS lever	Resistance	
			Between (4) – (1)	Neutral	3.2 kΩ ± 20%	
			Between (4) – (2)		1.6 kΩ ± 20%	
			Between (2) – (1)		1.6 kΩ ± 20%	
	3	Disconnection in wiring harness (Disconnection in wiring or defective contact in connector)	★ Prepare with starting switch OFF, then carry out troubleshooting without turning starting switch ON.			
			Wiring harness between STC1 (female) (22) – TLV1 (female) (4)		Resistance	Max. 1 Ω
			Wiring harness between STC1 (female) (7) – TLV1 (female) (2)		Resistance	Max. 1 Ω
	4	Ground fault in wiring harness (Contact with GND circuit)	★ Prepare with starting switch OFF, then carry out troubleshooting without turning starting switch ON.			
			Wiring harness between STC1 (female) (7) – TLV1 (female) (2) and chassis ground		Resistance	Min. 1 MΩ
	5	Defective power train controller	★ Prepare with starting switch OFF, then turn starting switch ON and carry out troubleshooting.			
			STC1		Voltage	
			Between (7) – (21)		0.5 – 4.5 V	

Circuit diagram related to PCCS lever potentiometer

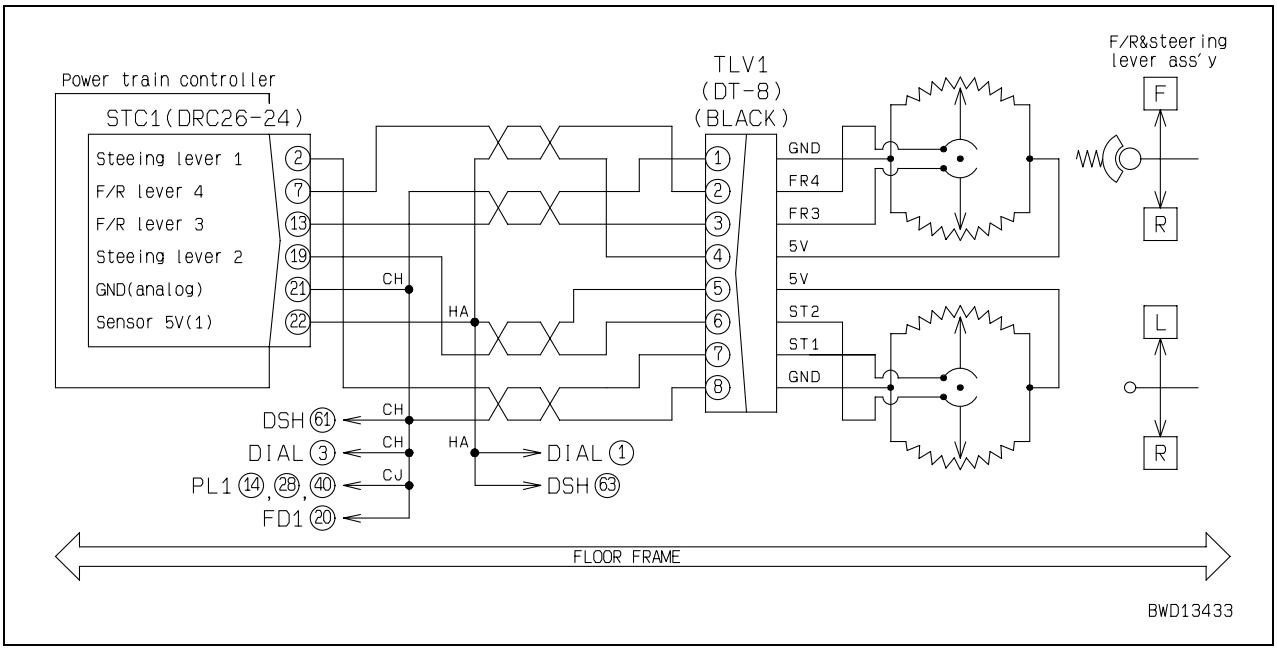

Failure code [DK57KB] FR lever 2: Short circuit

Action code	Failure code	Trouble	FR lever 2: Short circuit (Power train controller system)
E03	**DK57KB**		
Contents of trouble	• Signal voltage of PCCS lever F-R potentiometer 2 system is above 4.5 V.		
Action of controller	• Continues control with signal of PCCS lever F-R potentiometer 1 system. • Limits operation of engine and transmission.		
Problem that appears on machine	• Once machine is stopped, engine speed is limited to medium (half). • Once machine is stopped, travel is limited to F1 and R1.		
Related information	• State of PCCS lever F-R potentiometer 2 signal can be checked with monitoring function. (Code: 50201 T/M Lever 2 Potentio) • Method of reproducing failure code: Turn starting switch ON + Operate PCCS lever (in F-R direction).		

	Cause		Standard value in normal state/Remarks on troubleshooting			
Possible causes and standard value in normal state	1	Defective sensor 5V power supply system	If failure code [**DBE7KK**] is also displayed, carry out troubleshooting for it first.			
	2	Defective PCCS lever F-R potentiometer 2 (Internal short circuit)	★ Prepare with starting switch OFF, then carry out troubleshooting without turning starting switch ON.			
			TLV1 (male)	PCCS lever	Resistance	
			Between (4) – (1)	Neutral	3.2 kΩ ± 20%	
			Between (4) – (2)		1.6 kΩ ± 20%	
			Between (2) – (1)		1.6 kΩ ± 20%	
	3	Hot short (Short circuit with 24V circuit) in wiring harness	★ Prepare with starting switch OFF, then turn starting switch ON and carry out troubleshooting.			
			Wiring harness between STC1 (female) (7) – TLV1 (female) (2) and chassis ground		Voltage	Max. 1 V
	4	Defective power train controller	★ Prepare with starting switch OFF, then turn starting switch ON and carry out troubleshooting.			
			STC1		Voltage	
			Between (7) – (21)		0.5 – 4.5 V	

Circuit diagram related to PCCS lever potentiometer

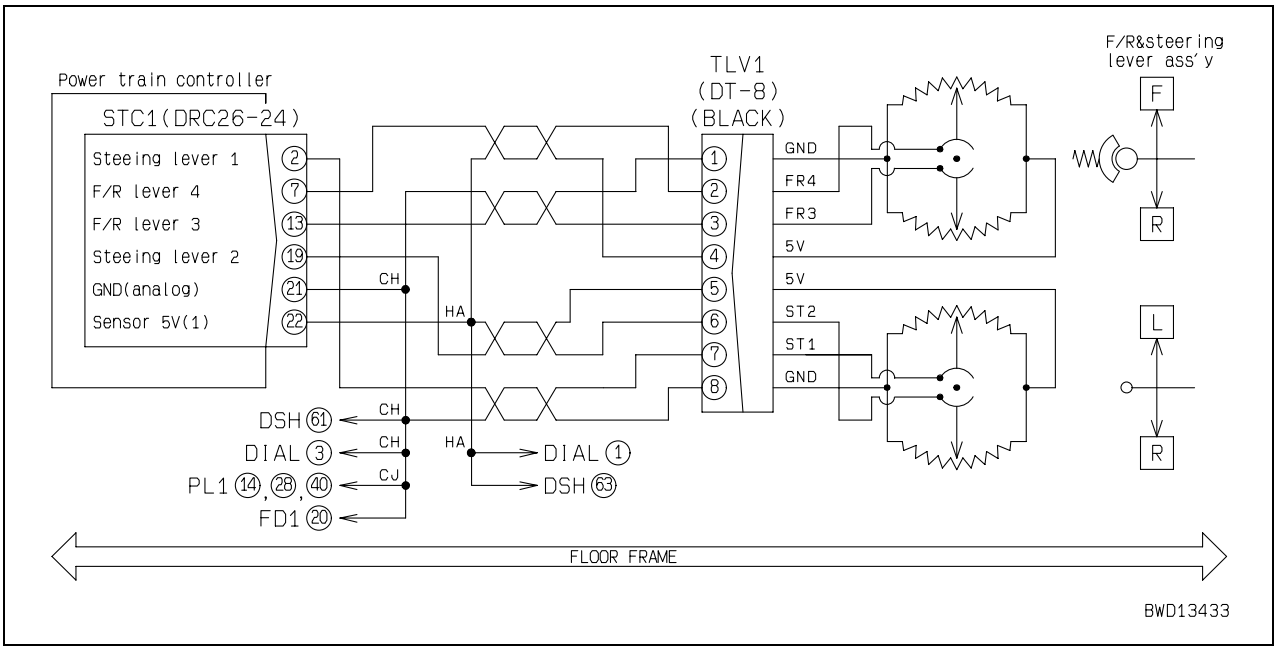

Failure code [DKH1KA] Pitch angle sensor: Disconnection

Action code	Failure code	Trouble	Pitch angle sensor: Disconnection (Power train controller system)
E03	**DKH1KA**		
Contents of trouble	• Signal voltage of pitch angle sensor is below 0.5 V.		
Action of controller	• Cannot sense pitch angle of machine. • Limits operation of engine and transmission.		
Problem that appears on machine	• Gearshift shock is made on slope or steering shock is made on level ground. • Once machine is stopped, engine speed is limited to medium (half). • Once machine is stopped, travel is limited to F1 and R1.		
Related information	• State of pitch angle sensor signal can be checked with monitoring function. (Code: 60100 Pitch Angle Sensor) • Method of reproducing failure code: Turn starting switch ON.		

	Cause		Standard value in normal state/Remarks on troubleshooting		
Possible causes and standard value in normal state	1	Defective sensor 24V power supply system	If failure code [**DBE6KK**] is also displayed, carry out troubleshooting for it first.		
	2	Defective pitch angle sensor (Internal trouble)	★ Prepare with starting switch OFF, then turn starting switch ON and carry out troubleshooting.		
			PT1		Voltage
			Between (C) – (A)	Power supply	20 – 30 V
			Between (B) – (A)	Signal	0.15 – 4.85 V
			Sensor voltage is measured with wiring harness connected. Accordingly, if voltage is abnormal, check wiring harness and controller, too, for another cause of trouble, and then judge.		
	3	Disconnection in wiring harness (Disconnection in wiring or defective contact in connector)	★ Prepare with starting switch OFF, then carry out troubleshooting without turning starting switch ON.		
			Wiring harness between STC1 (female) (21) – PT1 (female) (A)	Resistance	Max. 1 Ω
			Wiring harness between STC1 (female) (8) – PT1 (female) (B)	Resistance	Max. 1 Ω
			Wiring harness between STC1 (female) (16) – PT1 (female) (C)	Resistance	Max. 1 Ω
	4	Ground fault in wiring harness (Contact with GND circuit)	★ Prepare with starting switch OFF, then carry out troubleshooting without turning starting switch ON.		
			Wiring harness between STC1 (female) (8) – PT1 (female) (B) and chassis ground	Resistance	Min. 1 MΩ
	5	Defective power train controller	If causes 1 – 4 are not detected, power train controller may be defective. (Since trouble is in system, troubleshooting cannot be carried out.)		

Circuit diagram related to pitch angle sensor

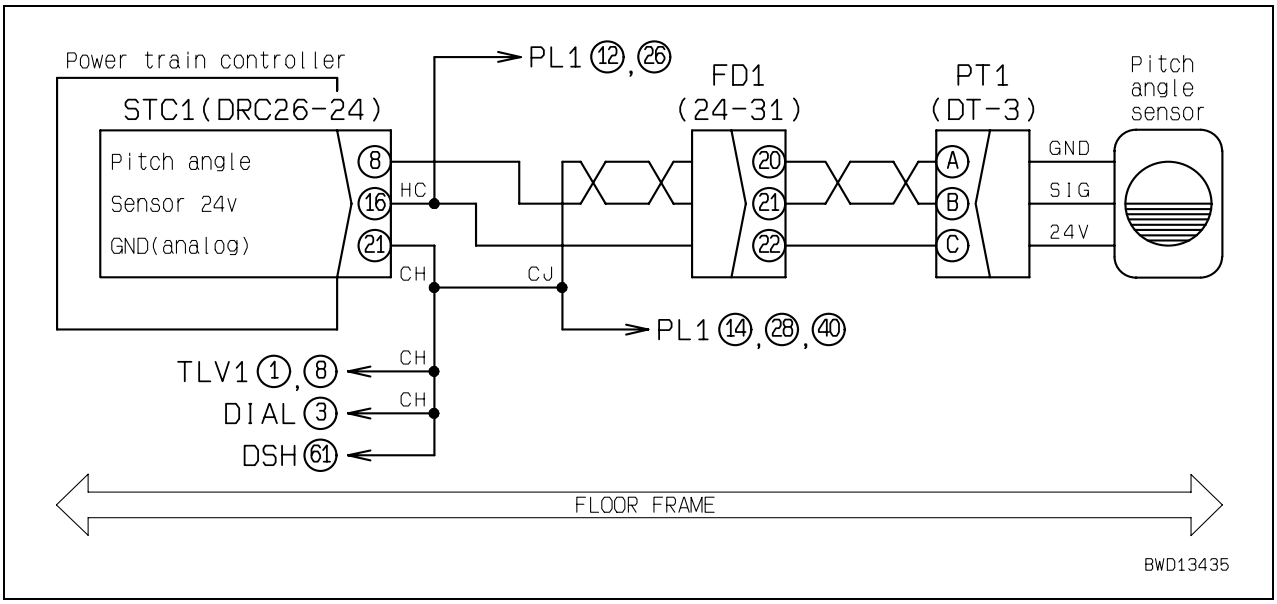

Failure code [DKH1KB] Pitch angle sensor: Short circuit

Action code	Failure code	Trouble	Pitch angle sensor: Short circuit (Power train controller system)
E03	**DKH1KB**		
Contents of trouble	• Signal voltage of pitch angle sensor is above 4.85 V.		
Action of controller	• Cannot sense pitch angle of machine. • Limits operation of engine and transmission.		
Problem that appears on machine	• Gearshift shock is made on slope or steering shock is made on level ground. • Once machine is stopped, engine speed is limited to medium (half). • Once machine is stopped, travel is limited to F1 and R1.		
Related information	• State of pitch angle sensor signal can be checked with monitoring function. (Code: 60100 Pitch Angle Sensor) • Method of reproducing failure code: Turn starting switch ON.		

	Cause		Standard value in normal state/Remarks on troubleshooting		
Possible causes and standard value in normal state	1	Defective sensor 24V power supply system	If failure code [**DBE6KK**] is also displayed, carry out troubleshooting for it first.		
	2	Defective pitch angle sensor (Internal trouble)	★ Prepare with starting switch OFF, then turn starting switch ON and carry out troubleshooting.		
			PT1		Voltage
			Between (C) – (A)	Power supply	20 – 30 V
			Between (B) – (A)	Signal	0.15 – 4.85 V
			Sensor voltage is measured with wiring harness connected. Accordingly, if voltage is abnormal, check wiring harness and controller, too, for another cause of trouble, and then judge.		
	3	Hot short (Short circuit with 24V circuit) in wiring harness	★ Prepare with starting switch OFF, then turn starting switch ON and carry out troubleshooting.		
			Wiring harness between STC1 (female) (8) – PT1 (female) (B) and chassis ground	Voltage	Max. 1 V
	4	Defective power train controller	If causes 1 – 3 are not detected, power train controller may be defective. (Since trouble is in system, troubleshooting cannot be carried out.)		

Circuit diagram related to pitch angle sensor

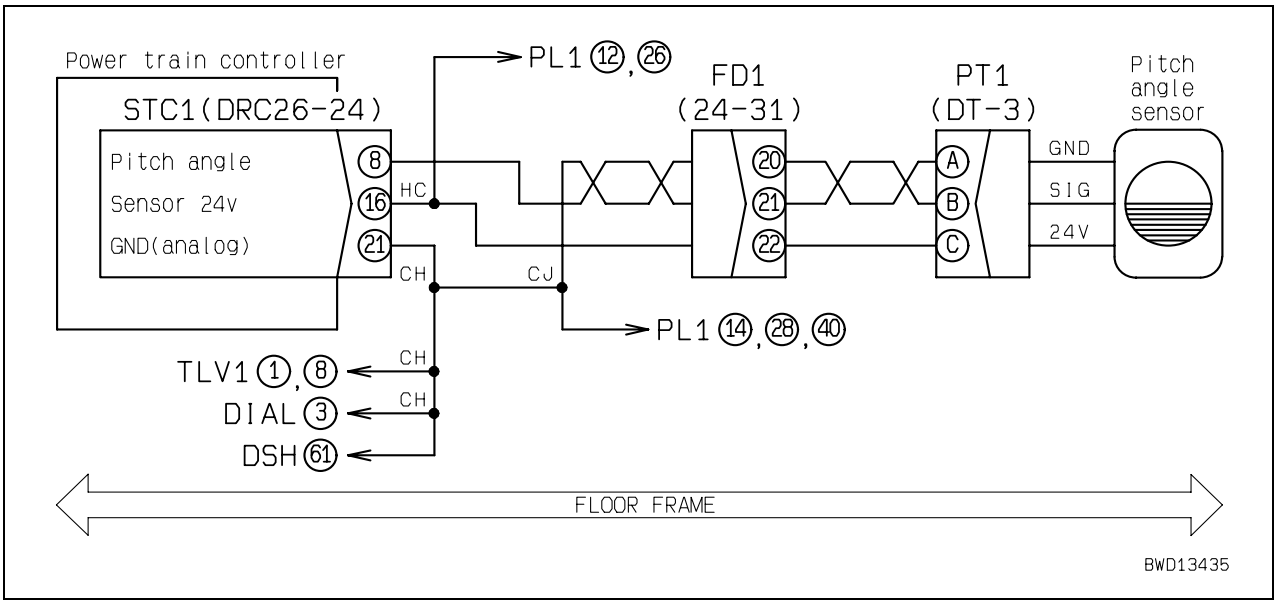

Failure code [DLT3KA] T/M out-speed sensor: Disconnection

Action code	Failure code	Trouble	T/M out-speed sensor: Disconnection (Power train controller system)
E01	**DLT3KA**		
Contents of trouble	• No signal is input from transmission bevel speed sensor.		
Action of controller	• Recognizes that transmission bevel speed is 0 rpm.		
Problem that appears on machine	• Transmission bevel speed cannot be monitored. • Traction force cannot be calculated.		
Related information	• Transmission bevel speed can be checked with monitoring function. (Code: 31400 T/M Out Speed) • Method of reproducing failure code: Turn starting switch ON + Drive machine (actually or with no load).		

	Cause		Standard value in normal state/Remarks on troubleshooting		
Possible causes and standard value in normal state	1	Defective transmission bevel speed sensor (Internal disconnection or short circuit)	★ Prepare with starting switch OFF, then carry out troubleshooting without turning starting switch ON.		
			BVRV (male)	Resistance	
			Between (1) – (2)	500 – 1,000 Ω	
			Between (1) – chassis ground	Min. 1 MΩ	
	3	Disconnection in wiring harness (Disconnection in wiring or defective contact in connector)	★ Prepare with starting switch OFF, then carry out troubleshooting without turning starting switch ON.		
			Wiring harness between STC2 (female) (30) – BVRV (female) (1)	Resistance	Max. 1 Ω
			Wiring harness between STC2 (female) (29) – BVRV (female) (2)	Resistance	Max. 1 Ω
	4	Ground fault in wiring harness (Contact with GND circuit)	★ Prepare with starting switch OFF, then carry out troubleshooting without turning starting switch ON.		
			Wiring harness between STC2 (female) (30) – BVRV (female) (1) and chassis ground	Resistance	Min. 1 MΩ
	5	Defective power train controller	If causes 1 – 3 are not detected, power train controller may be defective. (Since trouble is in system, troubleshooting cannot be carried out.)		

Circuit diagram related to transmission bevel speed sensor

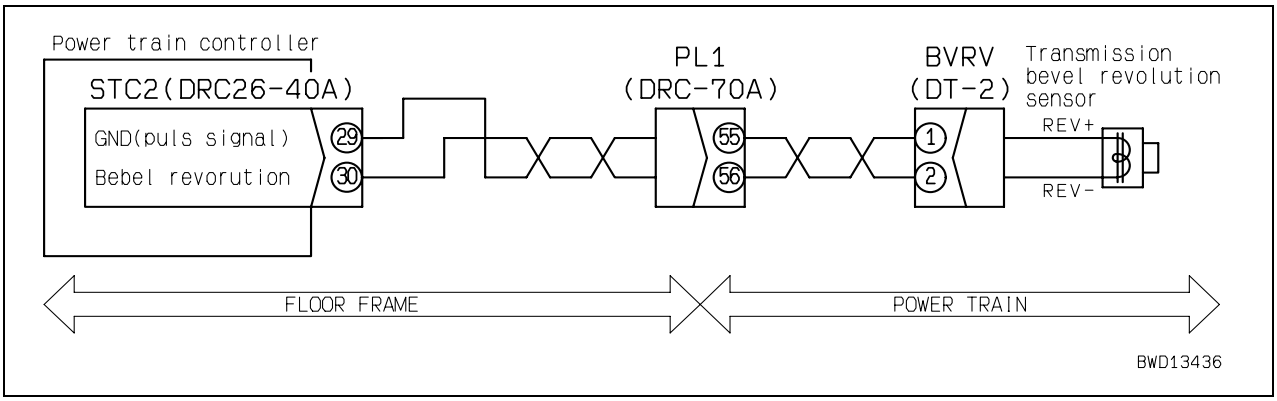

Failure code [DLT3KB] T/M out-speed sensor: Abnormal

Action code	Failure code	Trouble	T/M out-speed sensor: Abnormal (Power train controller system)
E01	**DLT3KB**		
Contents of trouble	• No signal is input from transmission bevel speed sensor.		
Action of controller	• Recognizes that transmission bevel speed is 0 rpm.		
Problem that appears on machine	• Transmission bevel speed cannot be monitored. • Traction force cannot be calculated.		
Related information	• Transmission bevel speed can be checked with monitoring function. (Code: 31400 T/M Out Speed) • Method of reproducing failure code: Turn starting switch ON + Drive machine (actually or with no load).		

	Cause		Standard value in normal state/Remarks on troubleshooting		
Possible causes and standard value in normal state	1	Defective transmission bevel speed sensor (Internal disconnection or short circuit)	★ Prepare with starting switch OFF, then carry out troubleshooting without turning starting switch ON.		
			BVRV (male)	Resistance	
			Between (1) – (2)	500 – 1,000 Ω	
			Between (1) – chassis ground	Min. 1 MΩ	
	2	Disconnection in wiring harness (Disconnection in wiring or defective contact in connector)	★ Prepare with starting switch OFF, then carry out troubleshooting without turning starting switch ON.		
			Wiring harness between STC2 (female) (30) – BVRV (female) (1)	Resistance	Max. 1 Ω
			Wiring harness between STC2 (female) (29) – BVRV (female) (2)	Resistance	Max. 1 Ω
	3	Ground fault in wiring harness (Contact with GND circuit)	★ Prepare with starting switch OFF, then carry out troubleshooting without turning starting switch ON.		
			Wiring harness between STC2 (female) (30) – BVRV (female) (1) and chassis ground	Resistance	Min. 1 MΩ
	4	Defective power train controller	If causes 1 – 3 are not detected, power train controller may be defective. (Since trouble is in system, troubleshooting cannot be carried out.)		

Circuit diagram related to transmission bevel speed sensor

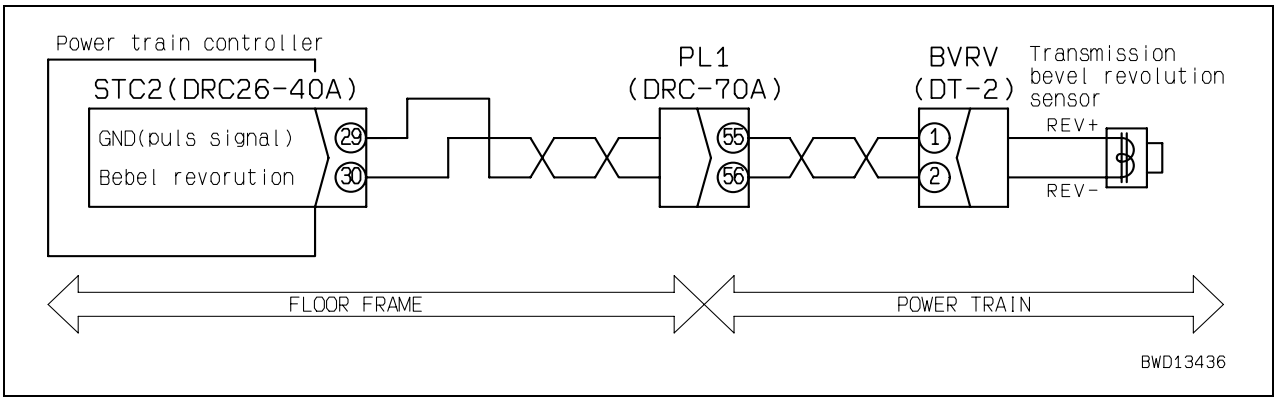

Failure code [DW7BKA] Fan rev EPC: Disconnection

Action code	Failure code	Trouble	Fan rev EPC: Disconnection (Power train controller system)
E01	**DW7BKA**		
Contents of trouble	• When signal is output to fan reverse solenoid circuit, no current flows.		
Action of controller	• Turns signal to fan reverse solenoid circuit OFF.		
Problem that appears on machine	• Fan reverse function cannot be used.		
Related information	• Operating condition of fan reverse solenoid can be checked with monitoring function. (Code: 40909 T/M Output 1) • Method of reproducing failure code: Turn starting switch ON + Select fan reverse mode.		

	Cause		Standard value in normal state/Remarks on troubleshooting		
Possible causes and standard value in normal state	1	Defective fan reverse solenoid (Internal disconnection)	★ Prepare with starting switch OFF, then carry out troubleshooting without turning starting switch ON.		
			FAR (male)	Resistance	
			Between (1) – (2)	34 – 44 Ω	
	2	Disconnection in wiring harness (Disconnection in wiring or defective contact in connector)	★ Prepare with starting switch OFF, then carry out troubleshooting without turning starting switch ON.		
			Wiring harness between STC3 (female) (18) – FAR (female) (1)	Resistance	Max. 1 Ω
			Wiring harness between STC3 (female) (13) – FAR (female) (2)	Resistance	Max. 1 Ω
	3	Hot short (Short circuit with 24V circuit) in wiring harness	★ Prepare with starting switch OFF, then turn starting switch ON and carry out troubleshooting.		
			Wiring harness between STC3 (female) (18) – FAR (female) (1) and chassis ground	Voltage	Max. 1 V
	4	Defective power train controller	If causes 1 – 3 are not detected, power train controller may be defective. (Since trouble is in system, troubleshooting cannot be carried out.)		

Circuit diagram related to fan reverse solenoid

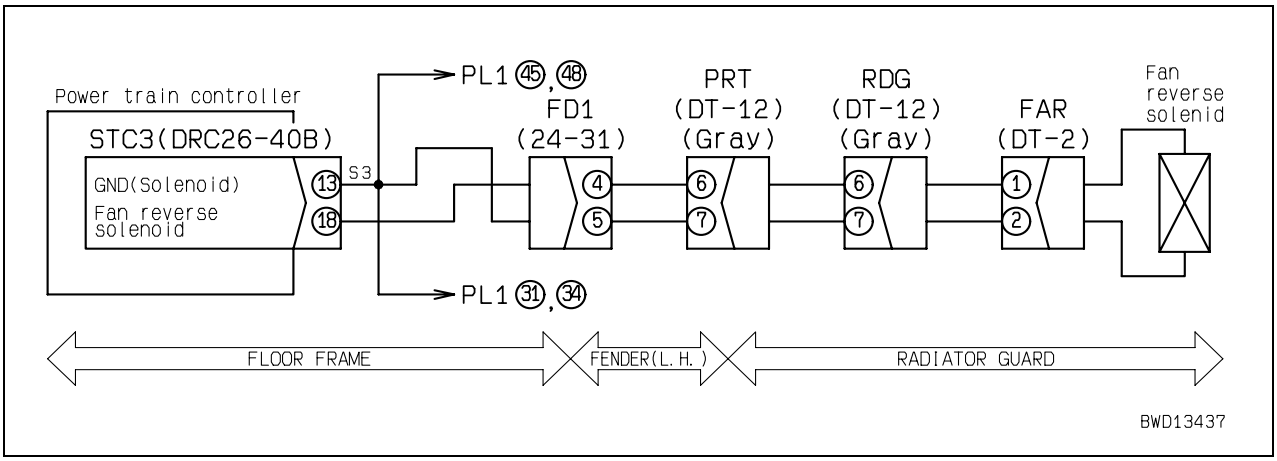

Failure code [DW7BKB] Fan rev EPC: Short circuit

Action code	Failure code	Trouble	Fan rev EPC: Short circuit (Power train controller system)
E01	**DW7BKB**		
Contents of trouble	• When signal was output to fan reverse solenoid circuit, abnormal current flowed.		
Action of controller	• Turns signal to fan reverse solenoid circuit OFF.		
Problem that appears on machine	• Fan reverse function cannot be used.		
Related information	• Operating condition of fan reverse solenoid can be checked with monitoring function. (Code: 40909 T/M Output 1) • Method of reproducing failure code: Turn starting switch ON + Select fan reverse mode.		

	Cause		Standard value in normal state/Remarks on troubleshooting		
Possible causes and standard value in normal state	1	Defective fan reverse solenoid (Internal short circuit)	★ Prepare with starting switch OFF, then carry out troubleshooting without turning starting switch ON.		
			FAR (male)	Resistance	
			Between (1) – (2)	34 – 44 Ω	
			Between (1) – chassis ground	Min. 1 MΩ	
	2	Ground fault in wiring harness (Contact with GND circuit)	★ Prepare with starting switch OFF, then carry out troubleshooting without turning starting switch ON.		
			Wiring harness between STC3 (female) (18) – FAR (female) (1) and chassis ground	Resistance	Min. 1 MΩ
	3	Short circuit in wiring harness (with another wiring harness)	★ Prepare with starting switch OFF, then carry out troubleshooting without turning starting switch ON.		
			Wiring harness between STC3 (female) (18) – FAR (female) (1) and between STC3 (female) (13) – FAR (female) (2)	Resistance	Min. 1 MΩ
	4	Defective power train controller	If causes 1 – 3 are not detected, power train controller may be defective. (Since trouble is in system, troubleshooting cannot be carried out.)		

Circuit diagram related to fan reverse solenoid

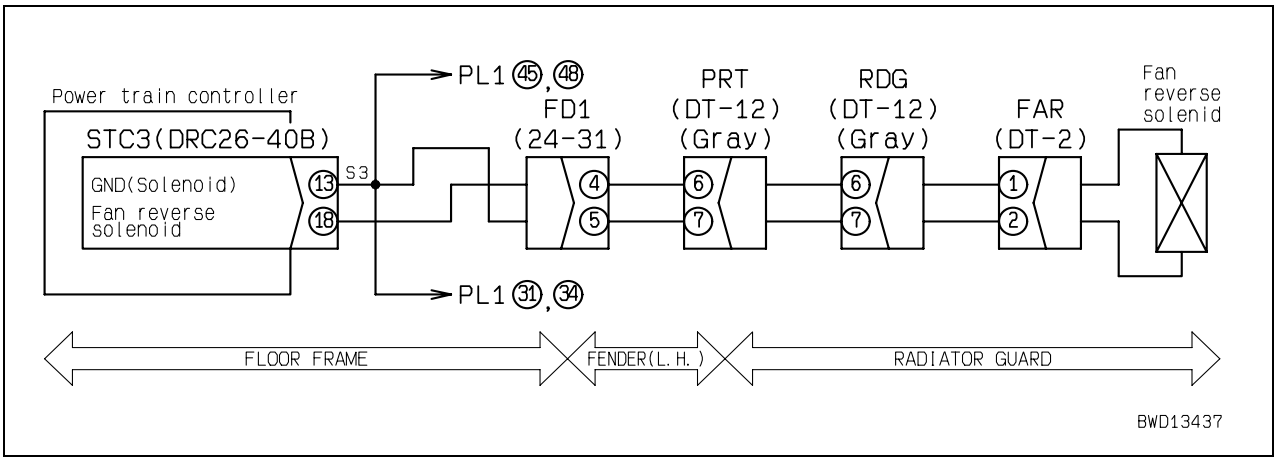

Failure code [DWN1KA] Hss EPC1: Disconnection

Action code	Failure code	Trouble	Hss EPC1: Disconnection (Power train controller system)
E03	**DWN1KA**		
Contents of trouble	• When signal is output to HSS left EPC solenoid circuit, no current flows.		
Action of controller	• Turns signal to HSS left EPC solenoid circuit OFF. • Limits operation of engine and transmission.		
Problem that appears on machine	• Once machine is stopped, engine speed is limited to medium (half). • Once machine is stopped, travel is limited to F1 and R1.		
Related information	• Output to HSS left EPC solenoid can be checked with monitoring function. (Code: 50600 HSS Solenoid LH (F/B)) • Method of reproducing failure code: Turn starting switch ON + Operate PCCS lever (Left steering)		

	Cause		Standard value in normal state/Remarks on troubleshooting		
Possible causes and standard value in normal state	1	Defective HSS left EPC solenoid (Internal disconnection)	★ Prepare with starting switch OFF, then carry out troubleshooting without turning starting switch ON.		
			HSL (male)	Resistance	
			Between (1) – (2)	4.5 – 14.5 Ω	
	2	Disconnection in wiring harness (Disconnection in wiring or defective contact in connector)	★ Prepare with starting switch OFF, then carry out troubleshooting without turning starting switch ON.		
			Wiring harness between STC3 (female) (25) – HSL (female) (1)	Resistance	Max. 1 Ω
			Wiring harness between STC3 (female) (3) – HSL (female) (2)	Resistance	Max. 1 Ω
	3	Hot short (Short circuit with 24V circuit) in wiring harness	★ Prepare with starting switch OFF, then turn starting switch ON and carry out troubleshooting.		
			Wiring harness between STC3 (female) (3) – HSL (female) (2) or circuit branch end and chassis ground	Voltage	Max. 1 V
	4	Defective power train controller	If causes 1 – 3 are not detected, power train controller may be defective. (Since trouble is in system, troubleshooting cannot be carried out.)		

Circuit diagram related to HSS left EPC solenoid

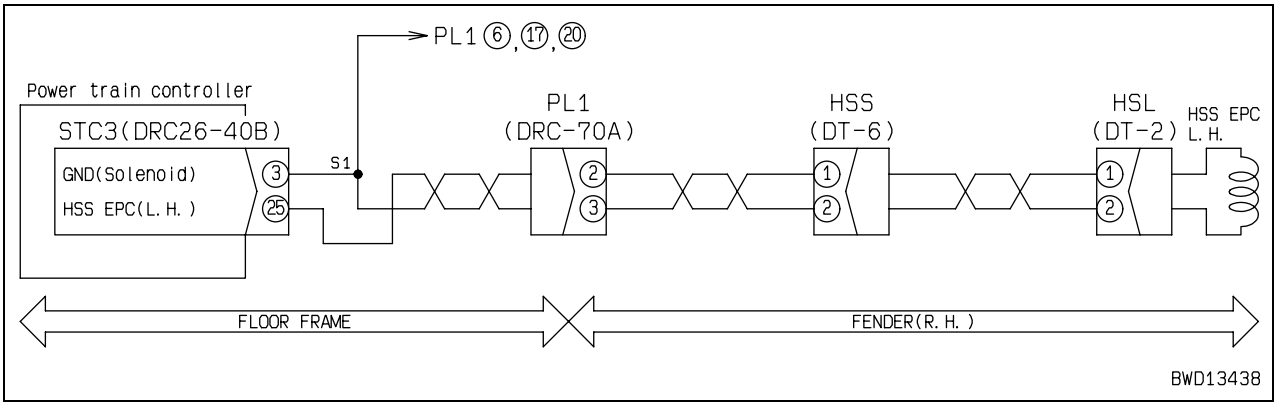

Failure code [DWN1KB] Hss EPC1: Short circuit

Action code	Failure code	Trouble	Hss EPC1: Short circuit (Power train controller system)
E03	**DWN1KB**		
Contents of trouble	• When signal is output to HSS left EPC solenoid circuit, abnormal current flowed.		
Action of controller	• Turns signal to HSS left EPC solenoid circuit OFF. • Limits operation of engine and transmission.		
Problem that appears on machine	• Once machine is stopped, engine speed is limited to medium (half). • Once machine is stopped, travel is limited to F1 and R1.		
Related information	• Output to HSS left EPC solenoid can be checked with monitoring function. (Code: 50600 HSS Solenoid LH (F/B)) • Method of reproducing failure code: Turn starting switch ON + Operate PCCS lever (Left steering).		

	Cause		Standard value in normal state/Remarks on troubleshooting		
Possible causes and standard value in normal state	1	Defective HSS left EPC solenoid (Internal short circuit)	★ Prepare with starting switch OFF, then carry out troubleshooting without turning starting switch ON.		
			HSL (male)	Resistance	
			Between (1) – (2)	4.5 – 14.5 Ω	
			Between (1) – chassis ground	Min. 1 MΩ	
	2	Ground fault in wiring harness (Contact with GND circuit)	★ Prepare with starting switch OFF, then carry out troubleshooting without turning starting switch ON.		
			Wiring harness between STC3 (female) (25) – HSL (female) (1) and chassis ground	Resistance	Min. 1 MΩ
	3	Short circuit in wiring harness (with another wiring harness)	★ Prepare with starting switch OFF, then carry out troubleshooting without turning starting switch ON.		
			Wiring harness between STC3 (female) (25) – HSL (female) (1) and between STC3 (female) (3) – HSL (female) (2)	Resistance	Min. 1 MΩ
	4	Defective power train controller	If causes 1 – 3 are not detected, power train controller may be defective. (Since trouble is in system, troubleshooting cannot be carried out.)		

Circuit diagram related to HSS left EPC solenoid

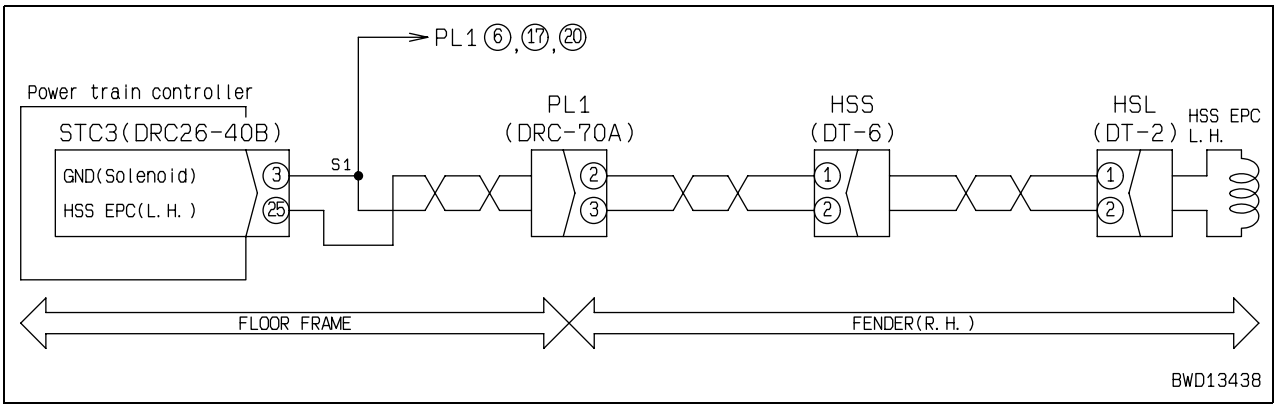

Failure code [DWN1KY] Hss EPC1: Short circuit

Action code	Failure code	Trouble	Hss EPC1: Short circuit (Power train controller system)
E03	**DWN1KY**		
Contents of trouble	• When signal is output to HSS left EPC solenoid circuit, abnormal current flowed.		
Action of controller	• Turns signal to HSS left EPC solenoid circuit OFF. • Limits operation of engine and transmission.		
Problem that appears on machine	• Once machine is stopped, engine speed is limited to medium (half). • Once machine is stopped, travel is limited to F1 and R1.		
Related information	• Output to HSS left EPC solenoid can be checked with monitoring function. (Code: 50600 HSS Solenoid LH (F/B)) • Method of reproducing failure code: Turn starting switch ON + Operate PCCS lever (Left steering).		

	Cause		Standard value in normal state/Remarks on troubleshooting		
Possible causes and standard value in normal state	1	Defective HSS left EPC solenoid (Internal short circuit)	★ Prepare with starting switch OFF, then carry out troubleshooting without turning starting switch ON.		
			HSL (male)	Resistance	
			Between (1) – (2)	4.5 – 14.5 Ω	
			Between (1) – chassis ground	Min. 1 MΩ	
	2	Hot short (Short circuit with 24V circuit) in wiring harness	★ Prepare with starting switch OFF, then turn starting switch ON and carry out troubleshooting.		
			Wiring harness between STC3 (female) (25) – HSL (female) (1) and chassis ground	Voltage	Max. 1 V
	3	Short circuit in wiring harness (with another wiring harness)	★ Prepare with starting switch OFF, then carry out troubleshooting without turning starting switch ON.		
			Wiring harness between STC3 (female) (25) – HSL (female) (1) and between STC3 (female) (3) – HSL (female) (2)	Resistance	Min. 1 MΩ
	4	Defective power train controller	If causes 1 – 3 are not detected, power train controller may be defective. (Since trouble is in system, troubleshooting cannot be carried out.)		

Circuit diagram related to HSS left EPC solenoid

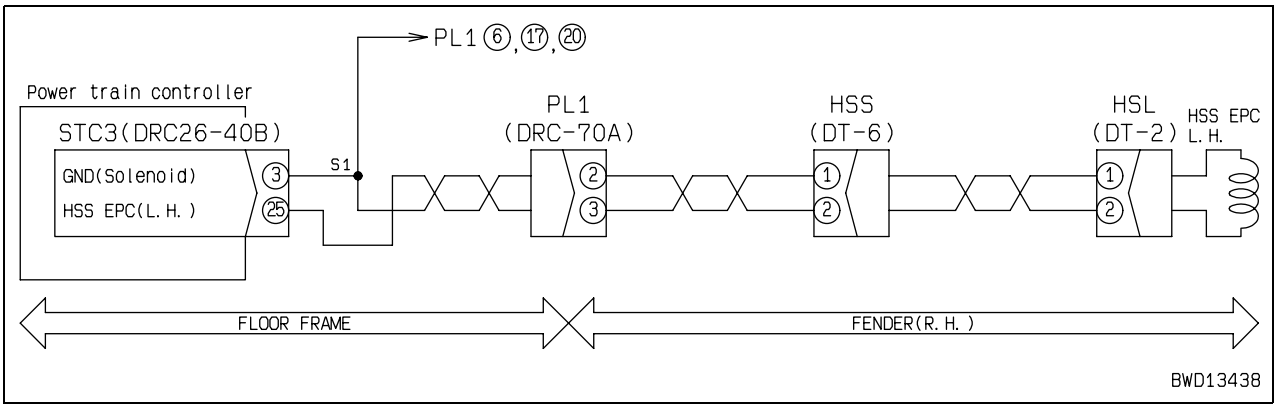

Failure code [DWN2KA] Hss EPC2: Disconnection

Action code	Failure code	Trouble	Hss EPC2: Disconnection (Power train controller system)
E03	**DWN2KA**		
Contents of trouble	• When signal is output to HSS right EPC solenoid circuit, no current flows.		
Action of controller	• Turns signal to HSS right EPC solenoid circuit OFF. • Limits operation of engine and transmission.		
Problem that appears on machine	• Once machine is stopped, engine speed is limited to medium (half). • Once machine is stopped, travel is limited to F1 and R1.		
Related information	• Output to HSS right EPC solenoid can be checked with monitoring function. (Code: 50601 HSS Solenoid RH (F/B)) • Method of reproducing failure code: Turn starting switch ON + Operate PCCS lever (Right steering).		

	Cause		Standard value in normal state/Remarks on troubleshooting		
Possible causes and standard value in normal state	1	Defective HSS right EPC solenoid (Internal disconnection)	★ Prepare with starting switch OFF, then carry out troubleshooting without turning starting switch ON.		
			HSR (male)	Resistance	
			Between (1) – (2)	4.5 – 14.5 Ω	
	2	Disconnection in wiring harness (Disconnection in wiring or defective contact in connector)	★ Prepare with starting switch OFF, then carry out troubleshooting without turning starting switch ON.		
			Wiring harness between STC3 (female) (35) – HSR (female) (1)	Resistance	Max. 1 Ω
			Wiring harness between STC3 (female) (3) – HSR (female) (2)	Resistance	Max. 1 Ω
	3	Hot short (Short circuit with 24V circuit) in wiring harness	★ Prepare with starting switch OFF, then turn starting switch ON and carry out troubleshooting.		
			Wiring harness between STC3 (female) (3) – HSR (female) (2) or circuit branch end and chassis ground	Voltage	Max. 1 V
	4	Defective power train controller	If causes 1 – 3 are not detected, power train controller may be defective. (Since trouble is in system, troubleshooting cannot be carried out.)		

Circuit diagram related to HSS right EPC solenoid

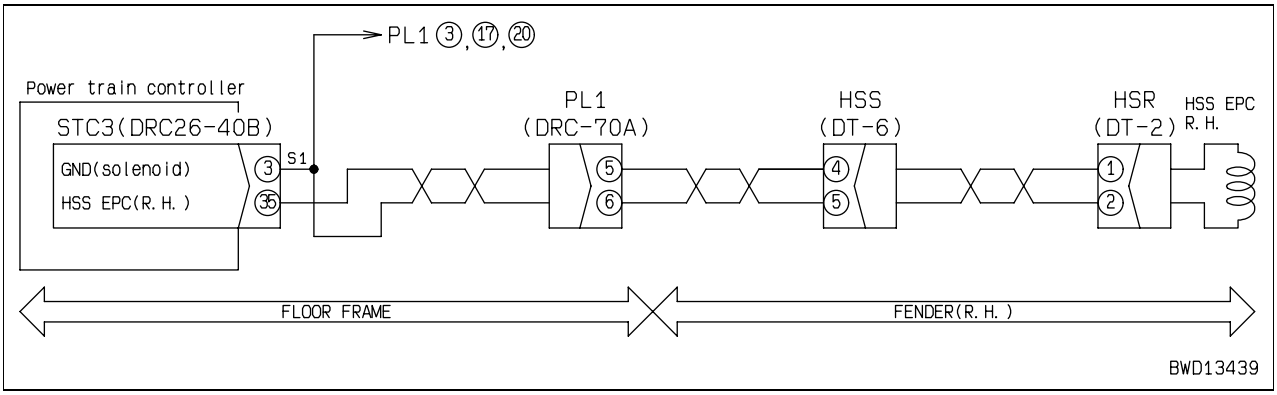

Failure code [DWN2KB] Hss EPC2: Short circuit

Action code	Failure code	Trouble	Hss EPC2: Short circuit (Power train controller system)
E03	**DWN2KB**		
Contents of trouble	• When signal is output to HSS right EPC solenoid circuit, abnormal current flowed.		
Action of controller	• Turns signal to HSS right EPC solenoid circuit OFF. • Limits operation of engine and transmission.		
Problem that appears on machine	• Once machine is stopped, engine speed is limited to medium (half). • Once machine is stopped, travel is limited to F1 and R1.		
Related information	• Output to HSS right EPC solenoid can be checked with monitoring function. (Code: 50601 HSS Solenoid RH (F/B)) • Method of reproducing failure code: Turn starting switch ON + Operate PCCS lever (Right steering).		

	Cause		Standard value in normal state/Remarks on troubleshooting		
Possible causes and standard value in normal state	1	Defective HSS right EPC solenoid (Internal short circuit)	★ Prepare with starting switch OFF, then carry out troubleshooting without turning starting switch ON.		
			HSR (male)	Resistance	
			Between (1) – (2)	4.5 – 14.5 Ω	
			Between (1) – chassis ground	Min. 1 MΩ	
	2	Ground fault in wiring harness (Contact with GND circuit)	★ Prepare with starting switch OFF, then carry out troubleshooting without turning starting switch ON.		
			Wiring harness between STC3 (female) (35) – HSR (female) (1) and chassis ground	Resistance	Min. 1 MΩ
	3	Short circuit in wiring harness (with another wiring harness)	★ Prepare with starting switch OFF, then carry out troubleshooting without turning starting switch ON.		
			Wiring harness between STC3 (female) (35) – HSR (female) (1) and between STC3 (female) (3) – HSR (female) (2)	Resistance	Min. 1 MΩ
	4	Defective power train controller	If causes 1 – 3 are not detected, power train controller may be defective. (Since trouble is in system, troubleshooting cannot be carried out.)		

Circuit diagram related to HSS right EPC solenoid

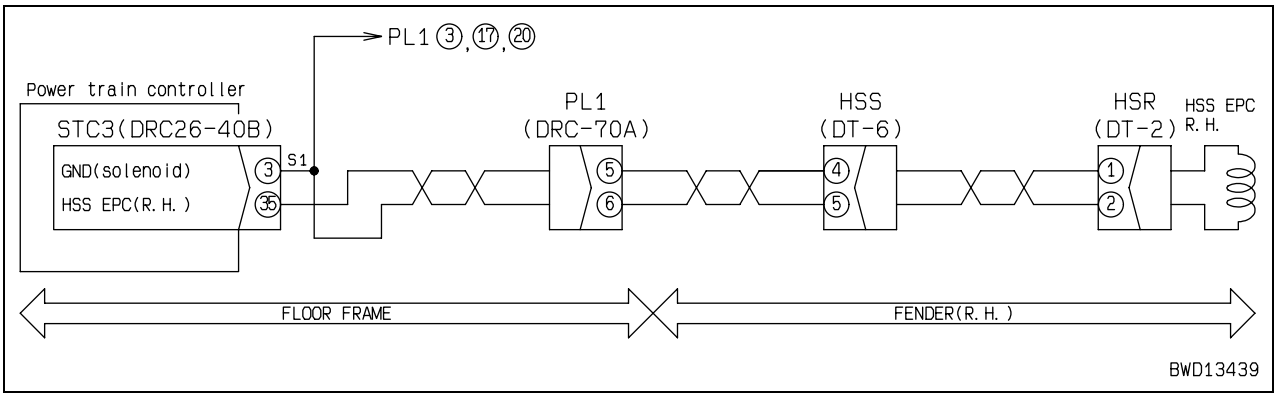

Failure code [DWN2KY] Hss EPC2: Short circuit

Action code	Failure code	Trouble	Hss EPC2: Short circuit (Power train controller system)
E03	**DWN2KY**		
Contents of trouble	• When signal is output to HSS right EPC solenoid circuit, abnormal current flowed.		
Action of controller	• Turns signal to HSS right EPC solenoid circuit OFF. • Limits operation of engine and transmission.		
Problem that appears on machine	• Once machine is stopped, engine speed is limited to medium (half). • Once machine is stopped, travel is limited to F1 and R1.		
Related information	• Output to HSS right EPC solenoid can be checked with monitoring function. (Code: 50601 HSS Solenoid RH (F/B)) • Method of reproducing failure code: Turn starting switch ON + Operate PCCS lever (Right steering).		

	Cause		Standard value in normal state/Remarks on troubleshooting		
Possible causes and standard value in normal state	1	Defective HSS right EPC solenoid (Internal short circuit)	★ Prepare with starting switch OFF, then carry out troubleshooting without turning starting switch ON.		
			HSR (male)	Resistance	
			Between (1) – (2)	4.5 – 14.5 Ω	
			Between (1) – chassis ground	Min. 1 MΩ	
	2	Hot short (Short circuit with 24V circuit) in wiring harness	★ Prepare with starting switch OFF, then turn starting switch ON and carry out troubleshooting.		
			Wiring harness between STC3 (female) (35) – HSR (female) (1) and chassis ground	Voltage	Max. 1 V
	3	Short circuit in wiring harness (with another wiring harness)	★ Prepare with starting switch OFF, then carry out troubleshooting without turning starting switch ON.		
			Wiring harness between STC3 (female) (35) – HSR (female) (1) and between STC3 (female) (3) – HSR (female) (2)	Resistance	Min. 1 MΩ
	4	Defective power train controller	If causes 1 – 3 are not detected, power train controller may be defective. (Since trouble is in system, troubleshooting cannot be carried out.)		

Circuit diagram related to HSS right EPC solenoid

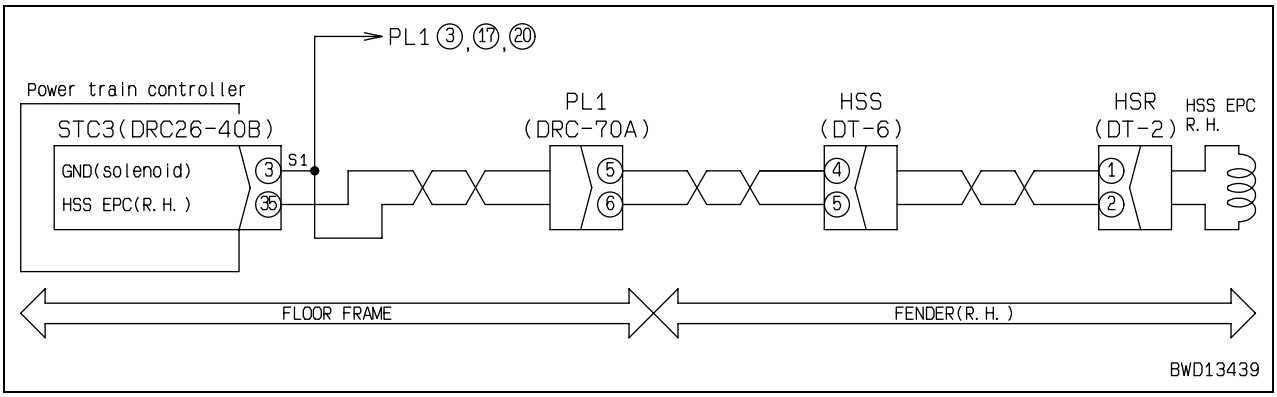

Failure code [DWN3KA] Ssp solenoid: Disconnection

Action code	Failure code	Trouble	Ssp solenoid: Disconnection (Power train controller system)
E04	**DWN3KA**		
Contents of trouble	• When signal is output to sudden stop prevent solenoid circuit, no current flows.		
Action of controller	• Limits operation of engine, transmission, and brake.		
Problem that appears on machine	• Brake is applied lightly during travel. • Once machine is stopped, engine speed is limited to medium (half). • Once machine is stopped, it cannot travel at all.		
Related information	• Output to sudden stop prevent solenoid can be checked with monitoring function. (Code: 31628 SSP Solenoid) • Method of reproducing failure code: Turn starting switch ON.		

	Cause		Standard value in normal state/Remarks on troubleshooting		
Possible causes and standard value in normal state	1	Defective sudden stop prevent solenoid (Internal disconnection)	★ Prepare with starting switch OFF, then carry out troubleshooting without turning starting switch ON.		
			SSP (male)	Resistance	
			Between (1) – (2)	3.5 – 12.5 Ω	
	2	Disconnection in wiring harness (Disconnection in wiring or defective contact in connector)	★ Prepare with starting switch OFF, then carry out troubleshooting without turning starting switch ON.		
			Wiring harness between STC3 (female) (7) – SSP (female) (1)	Resistance	Max. 1 Ω
			Wiring harness between STC3 (female) (23) – SSP (female) (2)	Resistance	Max. 1 Ω
	3	Hot short (Short circuit with 24V circuit) in wiring harness	★ Prepare with starting switch OFF, then turn starting switch ON and carry out troubleshooting.		
			Wiring harness between STC3 (female) (7) – SSP (female) (1) and chassis ground	Voltage	Max. 1 V
	4	Defective power train controller	★ Prepare with starting switch OFF, then carry out troubleshooting without turning starting switch ON.		
			STC3 (female)	Resistance	
			Between (7) – (23)	3.5 – 12.5 Ω	

Circuit diagram related to sudden stop prevent solenoid

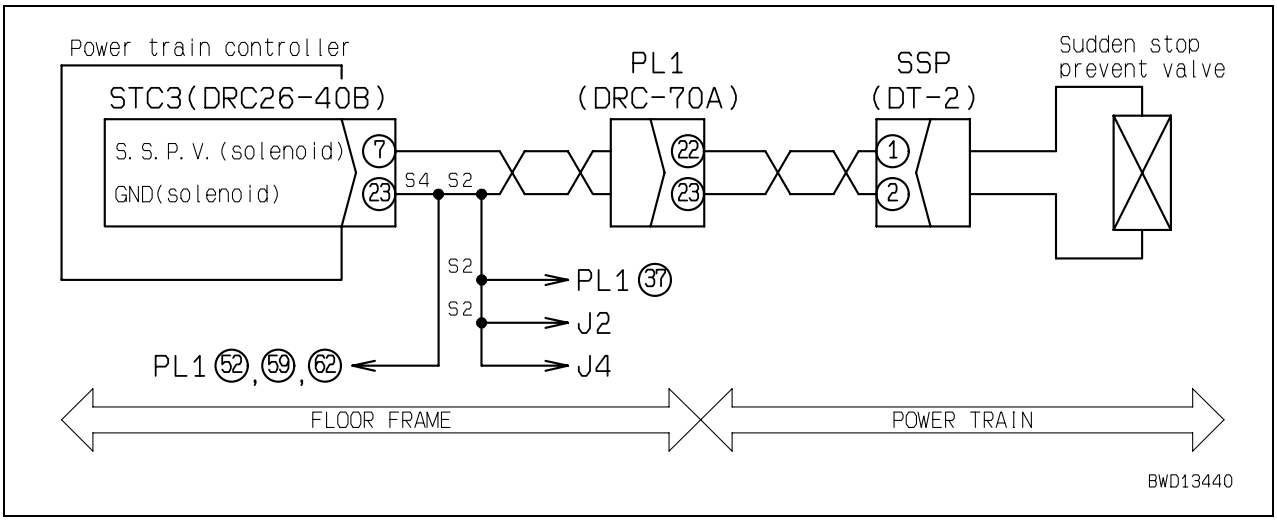

Failure code [DWN3KB] Ssp solenoid: Short circuit

Action code	Failure code	Trouble	Ssp solenoid: Short circuit (Power train controller system)
E04	**DWN3KB**		
Contents of trouble	• When signal was output to sudden stop prevent solenoid circuit, abnormal current flowed.		
Action of controller	• Limits operation of engine, transmission, and brake.		
Problem that appears on machine	• Brake is applied lightly during travel. • Once machine is stopped, engine speed is limited to medium (half). • Once machine is stopped, it cannot travel at all.		
Related information	• Output to sudden stop prevent solenoid can be checked with monitoring function. (Code: 31628 SSP Solenoid) • Method of reproducing failure code: Turn starting switch ON.		

	Cause		Standard value in normal state/Remarks on troubleshooting			
Possible causes and standard value in normal state	1	Defective sudden stop prevent solenoid (Internal short circuit)	★ Prepare with starting switch OFF, then carry out troubleshooting without turning starting switch ON.			
			SSP (male)	Resistance		
			Between (1) – (2)	3.5 – 12.5 Ω		
			Between (1) – chassis ground	Min. 1 MΩ		
	2	Ground fault in wiring harness (Contact with GND circuit)	★ Prepare with starting switch OFF, then carry out troubleshooting without turning starting switch ON.			
			Wiring harness between STC3 (female) (7) – SSP (female) (1) and chassis ground	Resistance	Min. 1 MΩ	
	3	Short circuit in wiring harness (with another wiring harness)	★ Prepare with starting switch OFF, then carry out troubleshooting without turning starting switch ON.			
			Wiring harness between STC3 (female) (7) – SSP (female) (1) and between STC3 (female) (23) – SSP (female) (2)	Resistance	Min. 1 MΩ	
	4	Defective power train controller	★ Prepare with starting switch OFF, then carry out troubleshooting without turning starting switch ON.			
			STC3 (female)	Resistance		
			Between (7) – (23)	3.5 – 12.5 Ω		
			Between (7) – chassis ground	Min. 1 MΩ		

Circuit diagram related to sudden stop prevent solenoid

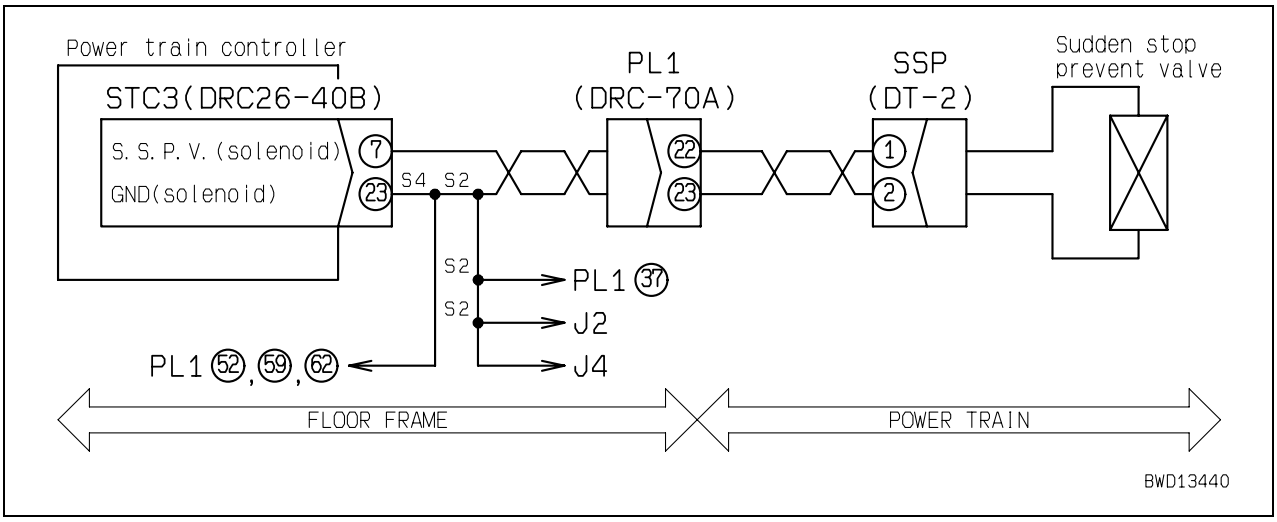

Failure code [DWN3KY] Ssp solenoid: Short circuit

Action code	Failure code	Trouble	Ssp solenoid: Short circuit (Power train controller system)
E04	**DWN3KY**		
Contents of trouble	• When signal was output to sudden stop prevent solenoid circuit, abnormal current flowed.		
Action of controller	• Limits operation of engine, transmission, and brake.		
Problem that appears on machine	• Brake is applied lightly during travel. • Once machine is stopped, engine speed is limited to medium (half). • Once machine is stopped, it cannot travel at all.		
Related information	• Output to sudden stop prevent solenoid can be checked with monitoring function. (Code: 31628 SSP Solenoid) • Method of reproducing failure code: Turn starting switch ON.		

	Cause		Standard value in normal state/Remarks on troubleshooting			
Possible causes and standard value in normal state	1	Defective sudden stop prevent solenoid (Internal short circuit)	★ Prepare with starting switch OFF, then carry out troubleshooting without turning starting switch ON.			
			SSP (male)	Resistance		
			Between (1) – (2)	3.5 – 12.5 Ω		
			Between (1) – chassis ground	Min. 1 MΩ		
	2	Hot short (Short circuit with 24V circuit) in wiring harness	★ Prepare with starting switch OFF, then turn starting switch ON and carry out troubleshooting.			
			Wiring harness between STC3 (female) (7) – SSP (female) (1) and chassis ground	Voltage	Max. 1 V	
	3	Short circuit in wiring harness (with another wiring harness)	★ Prepare with starting switch OFF, then carry out troubleshooting without turning starting switch ON.			
			Wiring harness between STC3 (female) (7) – SSP (female) (1) and between STC3 (female) (23) – SSP (female) (2)	Resistance	Min. 1 MΩ	
	4	Defective power train controller	★ Prepare with starting switch OFF, then carry out troubleshooting without turning starting switch ON.			
			STC3 (female)	Resistance		
			Between (7) – (23)	3.5 – 12.5 Ω		
			Between (7) – chassis ground	Min. 1 MΩ		

Circuit diagram related to sudden stop prevent solenoid

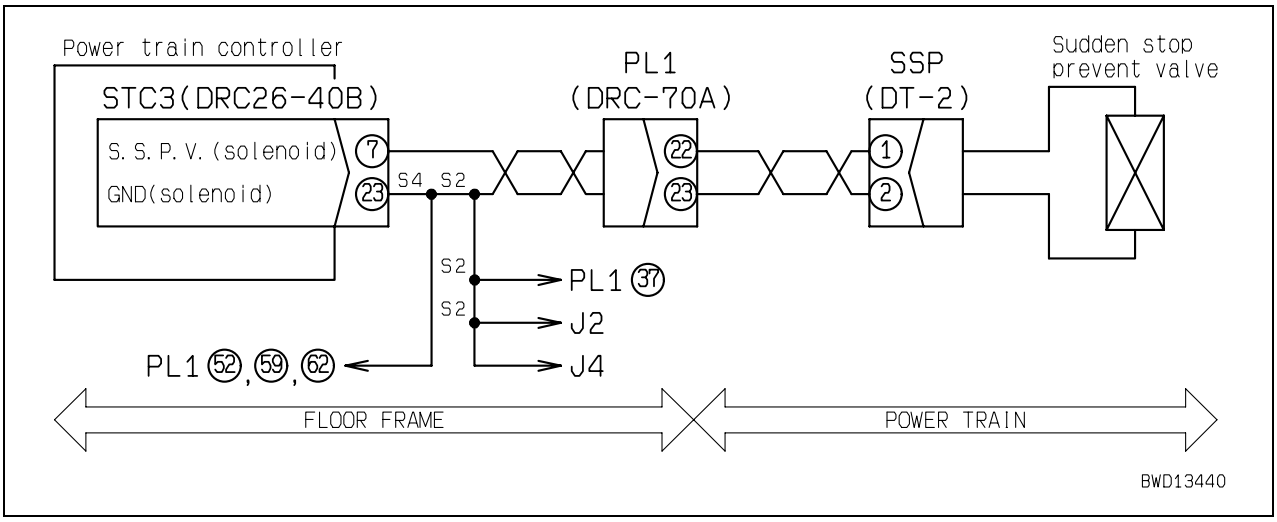

Failure code [DWN5KA] Fan pump solenoid: Disconnection

Action code	Failure code	Trouble	Fan pump solenoid: Disconnection (Power train controller system)
E01	**DWN5KA**		
Contents of trouble	• When signal is output to fan pump EPC solenoid circuit, no current flows.		
Action of controller	• Turns signal to fan pump EPC solenoid circuit OFF.		
Problem that appears on machine	• Fan speed is kept at maximum.		
Related information	• Output to fan pump EPC solenoid can be checked with monitoring function. (Code: 31624 Fan pump Solenoid (F/B)) • Method of reproducing failure code: Turn starting switch ON.		

	Cause		Standard value in normal state/Remarks on troubleshooting		
Possible causes and standard value in normal state	1	Defective fan pump EPC solenoid (Internal disconnection)	★ Prepare with starting switch OFF, then carry out troubleshooting without turning starting switch ON.		
			FAC (male)	Resistance	
			Between (1) – (2)	2 – 12 Ω	
	2	Disconnection in wiring harness (Disconnection in wiring or defective contact in connector)	★ Prepare with starting switch OFF, then carry out troubleshooting without turning starting switch ON.		
			Wiring harness between STC3 (female) (36) – FAC (female) (1)	Resistance	Max. 1 Ω
			Wiring harness between STC3 (female) (23) – FAC (female) (2)	Resistance	Max. 1 Ω
	3	Hot short (Short circuit with 24V circuit) in wiring harness	★ Prepare with starting switch OFF, then turn starting switch ON and carry out troubleshooting.		
			Wiring harness between STC3 (female) (23) – FAC (female) (2) or circuit branch end and chassis ground	Voltage	Max. 1 V
	4	Defective power train controller	If causes 1 – 3 are not detected, power train controller may be defective. (Since trouble is in system, troubleshooting cannot be carried out.)		

Circuit diagram related to fan control solenoid

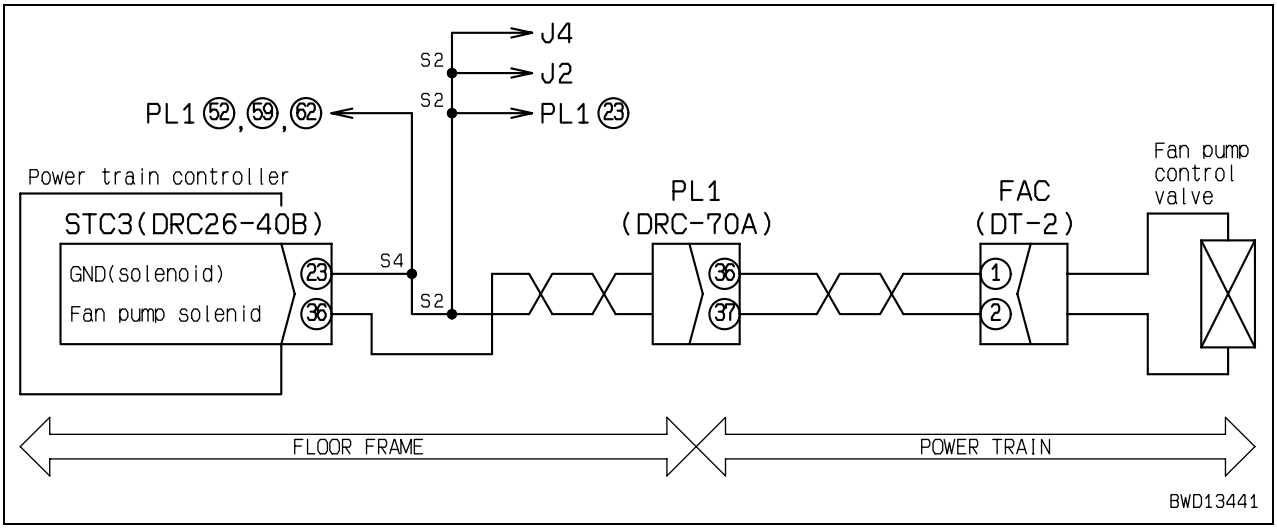

Failure code [DWN5KB] Fan pump solenoid: Short circuit

Action code	Failure code	Trouble	Fan pump solenoid: Short circuit (Power train controller system)
E01	**DWN5KB**		
Contents of trouble	• When signal was output to fan pump EPC solenoid circuit, abnormal current flowed.		
Action of controller	• Turns signal to fan pump EPC solenoid circuit OFF.		
Problem that appears on machine	• Fan speed is kept at maximum.		
Related information	• Output to fan pump EPC solenoid can be checked with monitoring function. (Code: 31624 Fan pump Solenoid (F/B)) • Method of reproducing failure code: Turn starting switch ON.		

	Cause		Standard value in normal state/Remarks on troubleshooting		
Possible causes and standard value in normal state	1	Defective fan pump EPC solenoid (Internal short circuit)	★ Prepare with starting switch OFF, then carry out troubleshooting without turning starting switch ON.		
			FAC (male)	Resistance	
			Between (1) – (2)	2 – 12 Ω	
			Between (1) – chassis ground	Min. 1 MΩ	
	2	Ground fault in wiring harness (Contact with GND circuit)	★ Prepare with starting switch OFF, then carry out troubleshooting without turning starting switch ON.		
			Wiring harness between STC3 (female) (36) – FAC (female) (1) and chassis ground	Resistance	Min. 1 MΩ
	3	Short circuit in wiring harness (with another wiring harness)	★ Prepare with starting switch OFF, then carry out troubleshooting without turning starting switch ON.		
			Wiring harness between STC3 (female) (36) – FAC (female) (1) and between STC3 (female) (23) – FAC (female) (2)	Resistance	Min. 1 MΩ
	4	Defective power train controller	If causes 1 – 3 are not detected, power train controller may be defective. (Since trouble is in system, troubleshooting cannot be carried out.)		

Circuit diagram related to fan control solenoid

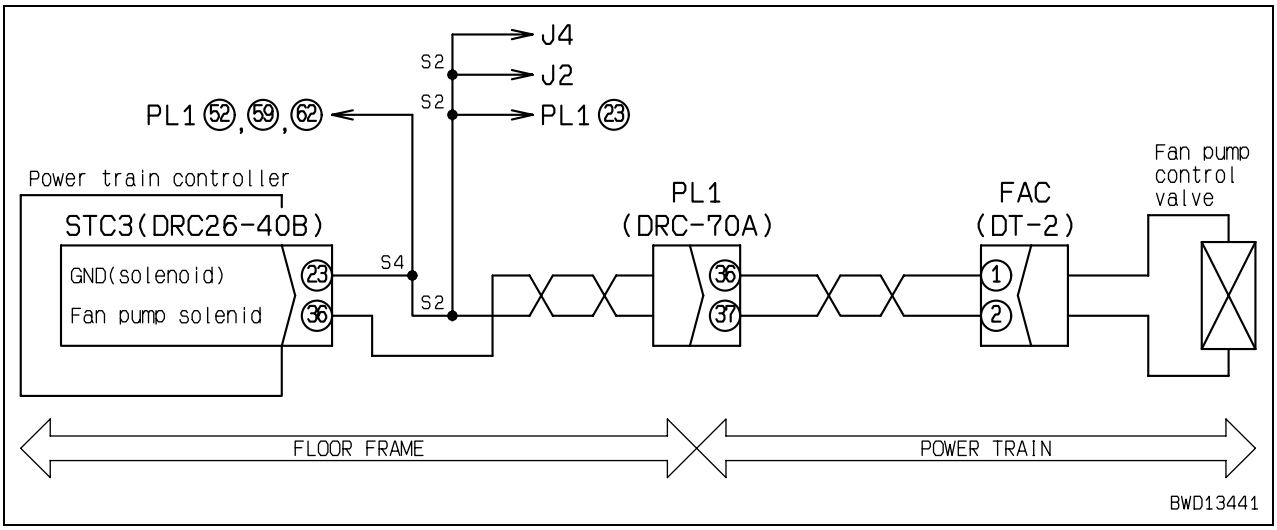

Failure code [DXA0KA] TVC Sol.: Disconnection

Action code	Failure code	Trouble	TVC Sol.: Disconnection (Work equipment controller system)
E01	**DXA0KA**		
Contents of trouble	• When signal is output to work equipment-HSS pump TVC solenoid circuit, no current flows.		
Action of controller	• Turns signal to work equipment-HSS pump TVC solenoid circuit OFF.		
Problem that appears on machine	• If engine is loaded while running at low speed, it stops.		
Related information	• Output to work equipment-HSS pump TVC solenoid can be checked with monitoring function. (Code: 01300 TVC Solenoid (F/B)) • Method of reproducing failure code: Turn starting switch ON.		

	Cause		Standard value in normal state/Remarks on troubleshooting			
Possible causes and standard value in normal state	1	Defective work equipment-HSS pump TVC solenoid (Internal disconnection)	★ Prepare with starting switch OFF, then carry out troubleshooting without turning starting switch ON.			
			TVC (male)	Resistance		
			Between (1) – (2)	2 – 12 Ω		
	2	Disconnection in wiring harness (Disconnection in wiring or defective contact in connector)	★ Prepare with starting switch OFF, then carry out troubleshooting without turning starting switch ON.			
			Wiring harness between WEC3 (female) (7) – TVC (female) (1)	Resistance	Max. 1 Ω	
			Wiring harness between WEC3 (female) (3) – TVC (female) (2)	Resistance	Max. 1 Ω	
	3	Hot short (Short circuit with 24V circuit) in wiring harness	★ Prepare with starting switch OFF, then turn starting switch ON and carry out troubleshooting.			
			Wiring harness between WEC3 (female) (7) – TVC (female) (1) and chassis ground	Voltage	Max. 1 V	
	4	Defective work equipment controller	★ Prepare with starting switch OFF, then carry out troubleshooting without turning starting switch ON.			
			WEC3 (female)	Resistance		
			Between (7) – (3)	2 – 12 Ω		

Circuit diagram related to work equipment-HSS pump TVC solenoid

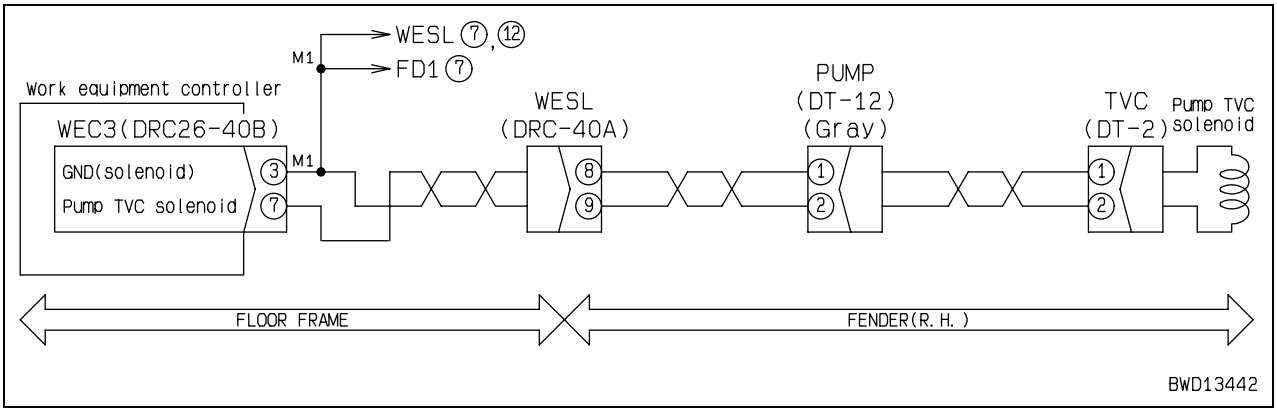

Failure code [DXA0KB] TVC Sol.: Short circuit

Action code	Failure code	Trouble	TVC Sol.: Short circuit (Work equipment controller system)
E01	**DXA0KB**		
Contents of trouble	• When signal was output to work equipment-HSS pump TVC solenoid circuit, abnormal current flowed.		
Action of controller	• Turns signal to work equipment-HSS pump TVC solenoid circuit OFF.		
Problem that appears on machine	• If engine is loaded while running at low speed, it stops.		
Related information	• Output to work equipment-HSS pump TVC solenoid can be checked with monitoring function. (Code: 01300 TVC Solenoid (F/B)) • Method of reproducing failure code: Turn starting switch ON.		

	Cause		Standard value in normal state/Remarks on troubleshooting			
Possible causes and standard value in normal state	1	Defective work equipment-HSS pump TVC solenoid (Internal disconnection)	★ Prepare with starting switch OFF, then carry out troubleshooting without turning starting switch ON.			
			TVC (male)	Resistance		
			Between (1) – (2)	2 – 12 Ω		
			Between (1) – chassis ground	Min. 1 MΩ		
	2	Ground fault in wiring harness (Contact with GND circuit)	★ Prepare with starting switch OFF, then carry out troubleshooting without turning starting switch ON.			
			Wiring harness between WEC3 (female) (7) – TVC (female) (1) and chassis ground	Resistance	Min. 1 MΩ	
	3	Short circuit in wiring harness (with another wiring harness)	★ Prepare with starting switch OFF, then carry out troubleshooting without turning starting switch ON.			
			Wiring harness between WEC3 (female) (7) – TVC (female) (1) and between WEC3 (female) (3) – TVC (female) (2)	Resistance	Min. 1 MΩ	
	4	Defective work equipment controller	★ Prepare with starting switch OFF, then carry out troubleshooting without turning starting switch ON.			
			WEC3 (female)	Resistance		
			Between (7) – (3)	2 – 12 Ω		
			Between (7) – chassis ground	Min. 1 MΩ		

Circuit diagram related to work equipment-HSS pump TVC solenoid

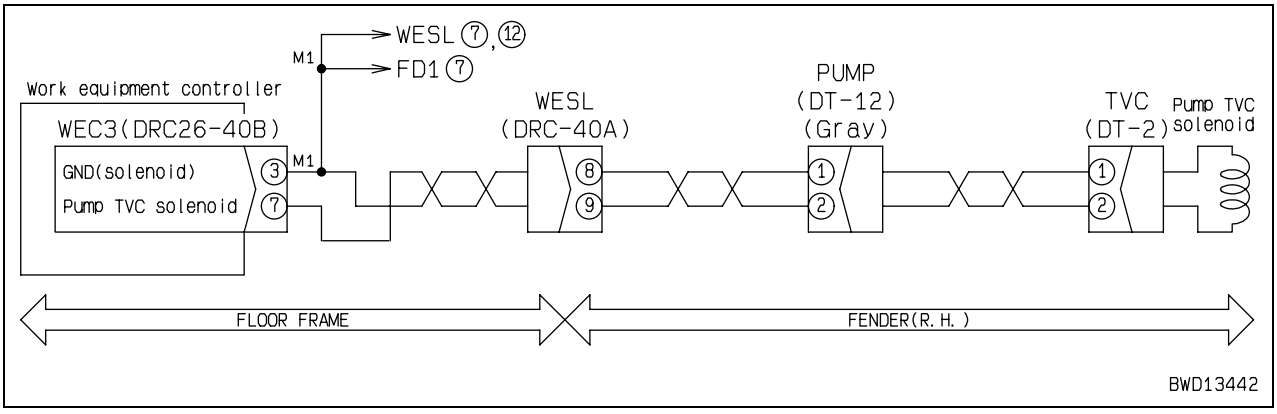

Failure code [DXA0KY] TVC Sol.: Short circuit

Action code	Failure code	Trouble	TVC Sol.: Short circuit (Work equipment controller system)
E01	**DXA0KY**		
Contents of trouble	• When signal was output to work equipment-HSS pump TVC solenoid circuit, abnormal current flowed.		
Action of controller	• Turns signal to work equipment-HSS pump TVC solenoid circuit OFF.		
Problem that appears on machine	• Work equipment speed may be lowered.		
Related information	• Output to work equipment-HSS pump TVC solenoid can be checked with monitoring function. (Code: 01300 TVC Solenoid (F/B)) • Method of reproducing failure code: Turn starting switch ON.		

	Cause		Standard value in normal state/Remarks on troubleshooting			
Possible causes and standard value in normal state	1	Defective work equipment-HSS pump TVC solenoid (Internal disconnection)	★ Prepare with starting switch OFF, then carry out troubleshooting without turning starting switch ON.			
			TVC (male)	Resistance		
			Between (1) – (2)	2 – 12 Ω		
			Between (1) – chassis ground	Min. 1 MΩ		
	2	Hot short (Short circuit with 24V circuit) in wiring harness	★ Prepare with starting switch OFF, then turn starting switch ON and carry out troubleshooting.			
			Wiring harness between WEC3 (female) (7) – TVC (female) (1) and chassis ground	Voltage	Max. 1 V	
	3	Short circuit in wiring harness (with another wiring harness)	★ Prepare with starting switch OFF, then carry out troubleshooting without turning starting switch ON.			
			Wiring harness between WEC3 (female) (7) – TVC (female) (1) and between WEC3 (female) (3) – TVC (female) (2)	Resistance	Min. 1 MΩ	
	4	Defective work equipment controller	★ Prepare with starting switch OFF, then carry out troubleshooting without turning starting switch ON.			
			WEC3 (female)	Resistance		
			Between (7) – (3)	2 – 12 Ω		
			Between (7) – chassis ground	Min. 1 MΩ		

Circuit diagram related to work equipment-HSS pump TVC solenoid

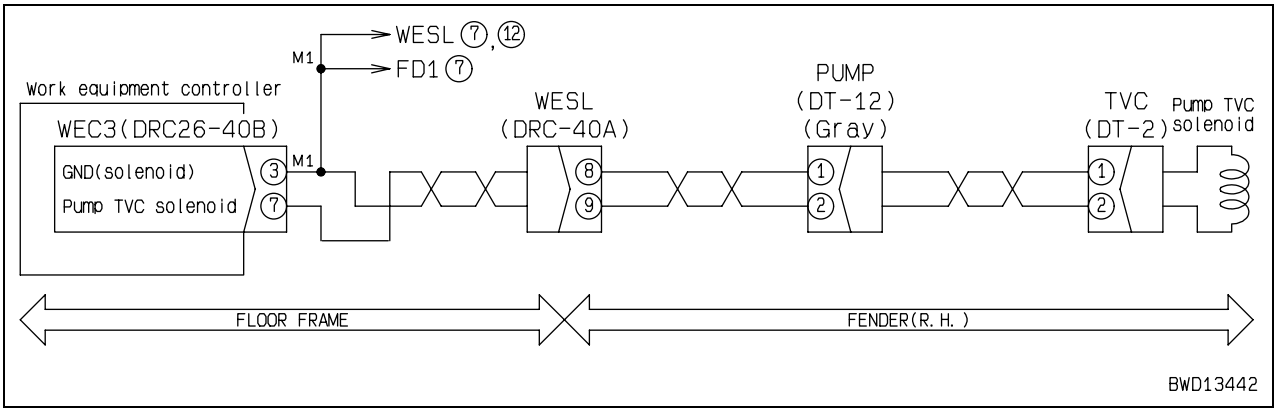

Failure code [DXH1KA] Lock-up ECMV: Disconnection

Action code	Failure code	Trouble	Lock-up ECMV: Disconnection (Power train controller system)
E02	**DXH1KA**		
Contents of trouble	• When signal is output to torque converter lockup clutch ECMV solenoid circuit, no current flows.		
Action of controller	• Turns signal to torque converter lockup clutch ECMV solenoid circuit OFF.		
Problem that appears on machine	• Torque converter lockup function does not operate.		
Related information	• Output to torque converter lockup clutch ECMV solenoid can be checked with monitoring function. (Code: 31642 L/U ECMV (F/B)) • Method of reproducing failure code: Start engine + Drive forward (in auto gearshift mode).		

	Cause		Standard value in normal state/Remarks on troubleshooting			
Possible causes and standard value in normal state	1	Defective lockup clutch ECMV solenoid (Internal disconnection)	★ Prepare with starting switch OFF, then carry out troubleshooting without turning starting switch ON.			
			SLUC (male)	Resistance		
			Between (1) – (2)	3.5 – 12.5 Ω		
	2	Disconnection in wiring harness (Disconnection in wiring or defective contact in connector)	★ Prepare with starting switch OFF, then carry out troubleshooting without turning starting switch ON.			
			Wiring harness between STC3 (female) (17) – SLUC (female) (1)	Resistance	Max. 1 Ω	
			Wiring harness between STC3 (female) (13) – SLUC (female) (2)	Resistance	Max. 1 Ω	
	3	Hot short (Short circuit with 24V circuit) in wiring harness	★ Prepare with starting switch OFF, then turn starting switch ON and carry out troubleshooting.			
			Wiring harness between STC3 (female) (17) – SLUC (female) (1) and chassis ground	Voltage	Max. 1 V	
	4	Defective power train controller	★ Prepare with starting switch OFF, then carry out troubleshooting without turning starting switch ON.			
			STC3 (female)	Resistance		
			Between (17) – (13)	3.5 – 12.5 Ω		

Circuit diagram related to torque converter lockup clutch ECMV

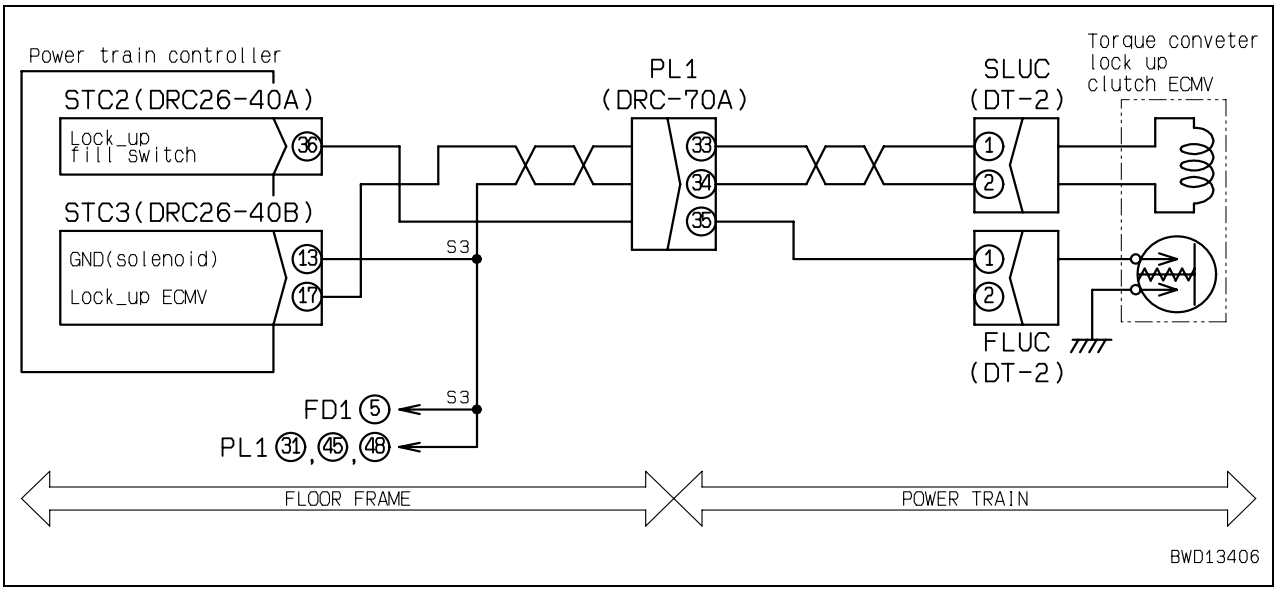

Failure code [DXH1KB] Lock-up ECMV: Short circuit

Action code	Failure code	Trouble	Lock-up ECMV: Short circuit (Power train controller system)
E02	**DXH1KB**		
Contents of trouble	• When signal was output to torque converter lockup clutch ECMV solenoid circuit, abnormal current flowed.		
Action of controller	• Turns signal to torque converter lockup clutch ECMV solenoid circuit OFF.		
Problem that appears on machine	• Torque converter lockup function does not operate.		
Related information	• Output to torque converter lockup clutch ECMV solenoid can be checked with monitoring function. (Code: 31642 L/U ECMV (F/B)) • Method of reproducing failure code: Start engine + Drive forward (in auto gearshift mode).		

	Cause		Standard value in normal state/Remarks on troubleshooting			
Possible causes and standard value in normal state	1	Defective lockup clutch ECMV solenoid (Internal short circuit)	★ Prepare with starting switch OFF, then carry out troubleshooting without turning starting switch ON.			
			SLUC (male)	Resistance		
			Between (1) – (2)	3.5 – 12.5 Ω		
			Between (1) – chassis ground	Min. 1 MΩ		
	2	Ground fault in wiring harness (Contact with GND circuit)	★ Prepare with starting switch OFF, then carry out troubleshooting without turning starting switch ON.			
			Wiring harness between STC3 (female) (17) – SLUC (female) (1) and chassis ground	Resistance	Min. 1 MΩ	
	3	Short circuit in wiring harness (with another wiring harness)	★ Prepare with starting switch OFF, then carry out troubleshooting without turning starting switch ON.			
			Wiring harness between STC3 (female) (17) – SLUC (female) (1) and between STC3 (female) (13) – SLUC (female) (2)	Resistance	Min. 1 MΩ	
	4	Defective power train controller	★ Prepare with starting switch OFF, then carry out troubleshooting without turning starting switch ON.			
			STC3 (female)	Resistance		
			Between (17) – (13)	3.5 – 12.5 Ω		
			Between (17) – chassis ground	Min. 1 MΩ		

Circuit diagram related to torque converter lockup clutch ECMV

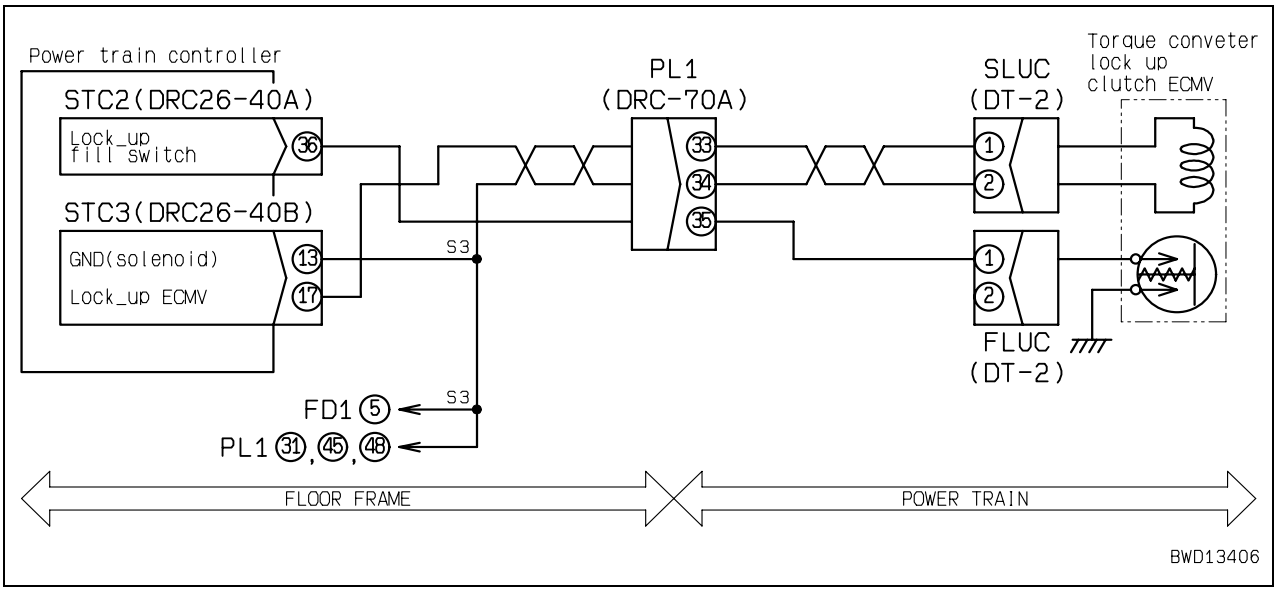

Failure code [DXH1KY] Lock-up ECMV: Short circuit

Action code	Failure code	Trouble	Lock-up ECMV: Short circuit (Power train controller system)
E03	**DXH1KY**		
Contents of trouble	• When signal was output to torque converter lockup clutch ECMV solenoid circuit, abnormal current flowed.		
Action of controller	• Turns signal to torque converter lockup clutch ECMV solenoid circuit OFF.		
Problem that appears on machine	• Torque converter lockup function operates constantly. • Engine may stall during travel.		
Related information	• Output to lockup clutch ECMV solenoid can be checked with monitoring function. (Code: 31642 L/U ECMV (F/B)) • Method of reproducing failure code: Start engine + Drive in auto gearshift mode (while lockup is in operation).		

	Cause		Standard value in normal state/Remarks on troubleshooting			
Possible causes and standard value in normal state	1	Defective lockup clutch ECMV solenoid (Internal short circuit)	★ Prepare with starting switch OFF, then carry out troubleshooting without turning starting switch ON.			
			SLUC (male)	Resistance		
			Between (1) – (2)	3.5 – 12.5 Ω		
			Between (1) – chassis ground	Min. 1 MΩ		
	2	Hot short (Short circuit with 24V circuit) in wiring harness	★ Prepare with starting switch OFF, then turn starting switch ON and carry out troubleshooting.			
			Wiring harness between STC3 (female) (17) – SLUC (female) (1) and chassis ground	Voltage	Max. 1 V	
	3	Short circuit in wiring harness (with another wiring harness)	★ Prepare with starting switch OFF, then carry out troubleshooting without turning starting switch ON.			
			Wiring harness between STC3 (female) (17) – SLUC (female) (1) and between STC3 (female) (13) – SLUC (female) (2)	Resistance	Min. 1 MΩ	
	4	Defective power train controller	★ Prepare with starting switch OFF, then carry out troubleshooting without turning starting switch ON.			
			STC3 (female)	Resistance		
			Between (17) – (13)	3.5 – 12.5 Ω		
			Between (17) – chassis ground	Min. 1 MΩ		

Circuit diagram related to torque converter lockup clutch ECMV

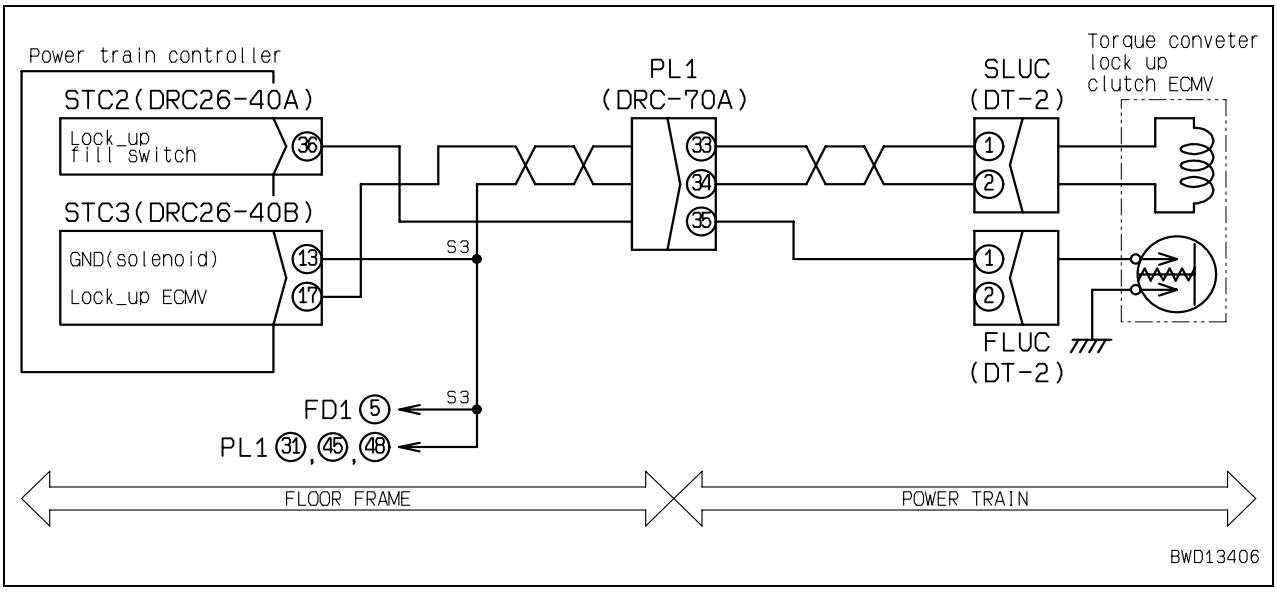

Failure code [DXH4KA] 1st clutch ECMV: Disconnection

Action code	Failure code	Trouble	1st clutch ECMV: Disconnection (Power train controller system)
E03	**DXH4KA**		
Contents of trouble	• When signal is output to transmission 1st clutch ECMV solenoid circuit, no current flows.		
Action of controller	• Turns signal to transmission 1st clutch ECMV solenoid circuit OFF. • Limits operation of engine and transmission.		
Problem that appears on machine	• Auto shift-down function does not operate. • Once machine is stopped, engine speed is limited to medium (half). • Once machine is stopped, travel is limited to F2 and R2.		
Related information	• Output to 1st clutch ECMV solenoid can be checked with monitoring function. (Code: 31602 T/M Clutch 1st ECMV (F/B)) • Method of reproducing failure code: Start engine + Set gear to F1 or R1.		

	Cause		Standard value in normal state/Remarks on troubleshooting		
Possible causes and standard value in normal state	1	Defective 1st clutch ECMV solenoid	★ Prepare with starting switch OFF, then carry out troubleshooting without turning starting switch ON.		
			S1T (male)	Resistance	
			Between (1) – (2)	3.5 – 12.5 Ω	
	2	Disconnection in wiring harness (Disconnection in wiring or defective contact in connector)	★ Prepare with starting switch OFF, then carry out troubleshooting without turning starting switch ON.		
			Wiring harness between STC3 (female) (6) – S1T (female) (1)	Resistance	Max. 1 Ω
			Wiring harness between STC3 (female) (23) – S1T (female) (2)	Resistance	Max. 1 Ω
	3	Hot short (Short circuit with 24V circuit) in wiring harness	★ Prepare with starting switch OFF, then turn starting switch ON and carry out troubleshooting.		
			Wiring harness between STC3 (female) (23) – S1T (female) (2) or circuit branch end and chassis ground	Voltage	Max. 1 V
	4	Defective power train controller	If causes 1 – 3 are not detected, power train controller may be defective. (Since trouble is in system, troubleshooting cannot be carried out.)		

Circuit diagram related to transmission 1st clutch ECMV

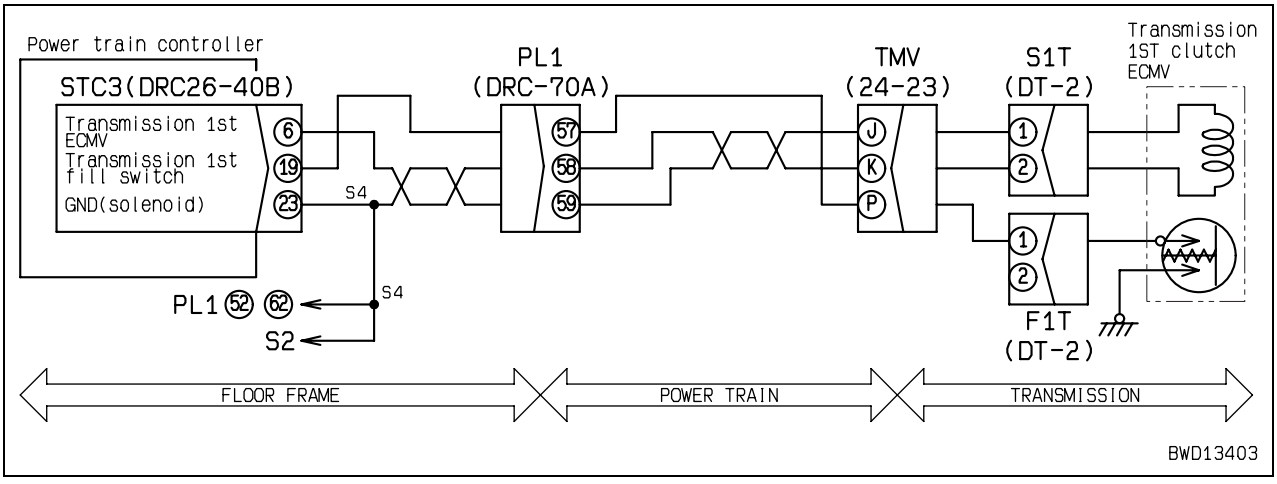

D155AX-6 Bulldozer

Form No. SEN00721-01

© 2006 KOMATSU
All Rights Reserved
Printed in Japan 05-06 (02)

BULLDOZER

D155AX-6

Machine model	Serial number
D155AX-6	80001 and up

40 Troubleshooting

Troubleshooting by failure and error codes, Part 7

Troubleshooting by failure and error codes, Part 7 3
Failure code [DXH4KB] 1st clutch ECMV: Short circuit 3
Failure code [DXH4KY] 1st clutch ECMV: Short circuit 4
Failure code [DXH5KA] 2nd clutch ECMV: Disconnection 5
Failure code [DXH5KB] 2nd clutch ECMV: Short circuit 6
Failure code [DXH5KY] 2nd clutch ECMV: Short circuit 7
Failure code [DXH6KA] 3rd clutch ECMV: Disconnection 8
Failure code [DXH6KB] 3rd clutch ECMV: Short circuit 9
Failure code [DXH6KY] 3rd clutch ECMV: Short circuit 10
Failure code [DXH7KA] R clutch ECMV: Disconnection 11
Failure code [DXH7KB] R clutch ECMV: Short circuit 12
Failure code [DXH7KY] R clutch ECMV: Short circuit 13
Failure code [DXH8KA] F clutch ECMV: Disconnection 14
Failure code [DXH8KB] F clutch ECMV: Short circuit 15

Failure code [DXH8KY] F clutch ECMV: Short circuit 16
Failure code [DXHBKA] Right brake ECMV: Disconnection..... 18
Failure code [DXHBKB] Right brake ECMV: Short circuit 20
Failure code [DXHBKY] Right brake ECMV: Short circuit 22
Failure code [DXHCKA] Left brake ECMV: Disconnection..... 24
Failure code [DXHCKB] Left brake ECMV: Short circuit 26
Failure code [DXHCKY] Left brake ECMV: Short circuit 28
Failure code [DXHRKA] Blade up EPC: Disconnection 30
Failure code [DXHRKB] Blade up EPC: Short circuit..... 31
Failure code [DXHRKY] Blade up EPC: Short circuit..... 32
Failure code [DXHSKA] Blade down EPC: Disconnection..... 33
Failure code [DXHSKB] Blade down EPC: Short circuit..... 34
Failure code [DXHSKY] Blade down EPC: Short circuit..... 35
Failure code [DXHTKA] Blade left 1 EPC: Disconnection..... 36
Failure code [DXHTKB] Blade left 1 EPC: Short circuit..... 37
Failure code [DXHTKY] Blade left 1 EPC: Short circuit..... 38
Failure code [DXHUKA] Blade right 1 EPC: Disconnection 39
Failure code [DXHUKB] Blade right 1 EPC: Short circuit..... 40
Failure code [DXHUKY] Blade right 1 EPC: Short circuit..... 41
Failure code [DXHWKA] Ripper up EPC: Disconnection 42
Failure code [DXHWKB] Ripper up EPC: Short circuit..... 43
Failure code [DXHWKY] Ripper up EPC: Short circuit..... 44
Failure code [DXHXKA] Ripper down EPC: Disconnection..... 45
Failure code [DXHXKB] Ripper down EPC: Short circuit 46
Failure code [DXHXKY] Ripper down EPC: Short circuit 47
Failure code [DXHYKA] Ripper Tilt In EPC: Disconnection..... 48
Failure code [DXHYKB] Ripper Tilt In EPC: Short circuit 49
Failure code [DXHYKY] Ripper Tilt In EPC: Short circuit 50
Failure code [DXHZKA] Ripper Tilt Back EPC: Disconnection..... 51
Failure code [DXHZKB] Ripper Tilt Back EPC: Short circuit 52
Failure code [DXHZKY] Ripper Tilt Back EPC: Short circuit 53
Failure code [DXJ4KA] Weq lock Sol.: Disconnection 54
Failure code [DXJ4KB] Weq lock Sol.: Short circuit..... 55

Troubleshooting by failure and error codes, Part 7

Failure code [DXH4KB] 1st clutch ECMV: Short circuit

Action code	Failure code	Trouble	1st clutch ECMV: Short circuit (Power train controller system)
E03	**DXH4KB**		
Contents of trouble	• When signal was output to transmission 1st clutch ECMV solenoid circuit, abnormal current flowed.		
Action of controller	• Turns signal to transmission 1st clutch ECMV solenoid circuit OFF. • Limits operation of engine and transmission.		
Problem that appears on machine	• Auto shift-down function does not operate. • Once machine is stopped, engine speed is limited to medium (half). • Once machine is stopped, travel is limited to F2 and R2.		
Related information	• Output to 1st clutch ECMV solenoid can be checked with monitoring function. (Code: 31602 T/M Clutch 1st ECMV (F/B)) • Method of reproducing failure code: Start engine + Set gear to F1 or R1.		

	Cause		Standard value in normal state/Remarks on troubleshooting		
Possible causes and standard value in normal state	1	Defective 1st clutch ECMV solenoid (Internal short circuit)	★ Prepare with starting switch OFF, then carry out troubleshooting without turning starting switch ON.		
			S1T (male)	Resistance	
			Between (1) – (2)	3.5 – 12.5 Ω	
			Between (1) – chassis ground	Min. 1 MΩ	
	2	Ground fault in wiring harness (Contact with GND circuit)	★ Prepare with starting switch OFF, then carry out troubleshooting without turning starting switch ON.		
			Wiring harness between STC3 (female) (6) – S1T (female) (1) and chassis ground	Resistance	Min. 1 MΩ
	3	Short circuit in wiring harness (with another wiring harness)	★ Prepare with starting switch OFF, then carry out troubleshooting without turning starting switch ON.		
			Wiring harness between STC3 (female) (6) – S1T (female) (1) and between STC3 (female) (23) – S1T (female) (2)	Resistance	Min. 1 MΩ
	4	Defective power train controller	If causes 1 – 3 are not detected, power train controller may be defective. (Since trouble is in system, troubleshooting cannot be carried out.)		

Circuit diagram related to transmission 1st clutch ECMV

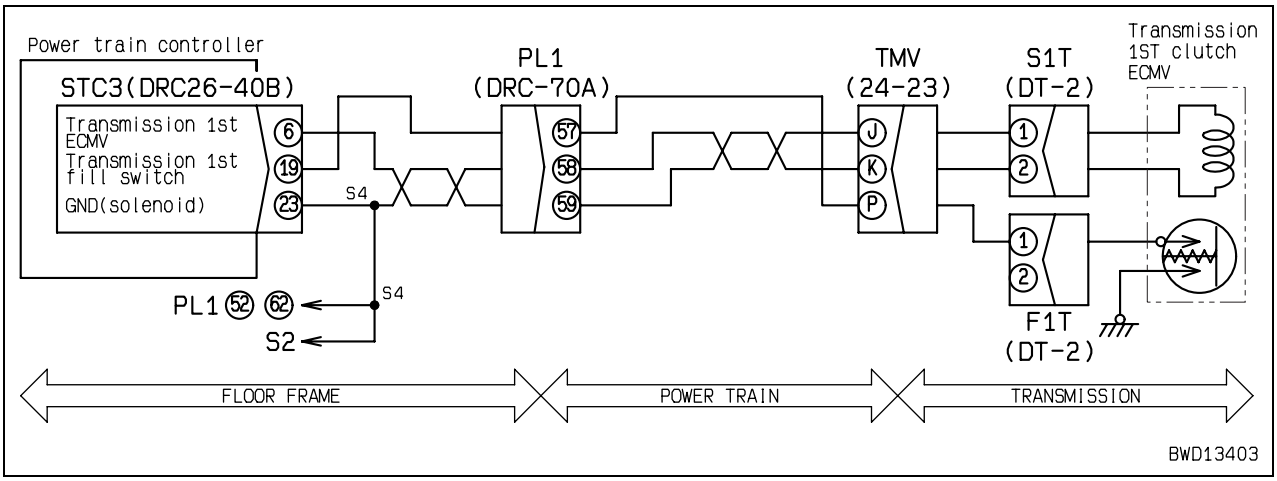

Failure code [DXH4KY] 1st clutch ECMV: Short circuit

Action code	Failure code	Trouble	1st clutch ECMV: Short circuit (Power train controller system)
E03	**DXH4KY**		
Contents of trouble	• When signal was output to transmission 1st clutch ECMV solenoid circuit, abnormal current flowed.		
Action of controller	• Turns signal to transmission 1st clutch ECMV solenoid circuit OFF. • Limits operation of engine and transmission.		
Problem that appears on machine	• Auto shift-down function does not operate. • Once machine is stopped, engine speed is limited to medium (half). • Once machine is stopped, travel is limited to F2 and R2.		
Related information	• Output to 1st clutch ECMV solenoid can be checked with monitoring function. (Code: 31602 T/M Clutch 1st ECMV (F/B)) • Method of reproducing failure code: Start engine + Set gear to F1 or R1.		

	Cause		Standard value in normal state/Remarks on troubleshooting		
Possible causes and standard value in normal state	1	Defective 1st clutch ECMV solenoid (Internal short circuit)	★ Prepare with starting switch OFF, then carry out troubleshooting without turning starting switch ON.		
			S1T (male)	Resistance	
			Between (1) – (2)	3.5 – 12.5 Ω	
			Between (1) – chassis ground	Min. 1 MΩ	
	2	Hot short (Short circuit with 24V circuit) in wiring harness	★ Prepare with starting switch OFF, then turn starting switch ON and carry out troubleshooting.		
			Wiring harness between STC3 (female) (6) – S1T (female) (1) and chassis ground	Voltage	Max. 1 V
	3	Short circuit in wiring harness (with another wiring harness)	★ Prepare with starting switch OFF, then carry out troubleshooting without turning starting switch ON.		
			Wiring harness between STC3 (female) (6) – S1T (female) (1) and between STC3 (female) (23) – S1T (female) (2)	Resistance	Min. 1 MΩ
	4	Defective power train controller	If causes 1 – 3 are not detected, power train controller may be defective. (Since trouble is in system, troubleshooting cannot be carried out.)		

Circuit diagram related to transmission 1st clutch ECMV

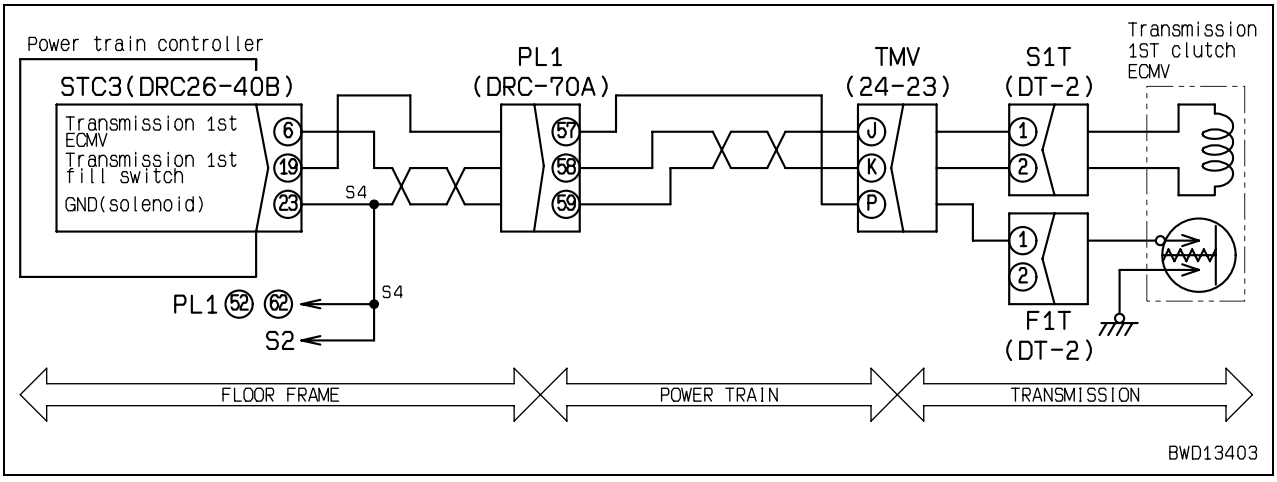

Failure code [DXH5KA] 2nd clutch ECMV: Disconnection

Action code	Failure code	Trouble	2nd clutch ECMV: Disconnection (Power train controller system)
E03	**DXH5KA**		
Contents of trouble	• When signal is output to transmission 2nd clutch ECMV solenoid circuit, no current flows.		
Action of controller	• Turns signal to transmission 2nd clutch ECMV solenoid circuit OFF. • Limits operation of engine and transmission.		
Problem that appears on machine	• Auto shift-down function does not operate. • Once machine is stopped, engine speed is limited to medium (half). • Once machine is stopped, travel is limited to F1 and R1.		
Related information	• Output to 2nd clutch ECMV solenoid can be checked with monitoring function. (Code: 31603 T/M Clutch 2nd ECMV (F/B)) • Method of reproducing failure code: Start engine + Set gear to F2 or R2.		

	Cause		Standard value in normal state/Remarks on troubleshooting			
Possible causes and standard value in normal state	1	Defective 2nd clutch ECMV solenoid (Internal disconnection)	★ Prepare with starting switch OFF, then carry out troubleshooting without turning starting switch ON.			
			S2T (male)	Resistance		
			Between (1) – (2)	3.5 – 12.5 Ω		
	2	Disconnection in wiring harness (Disconnection in wiring or defective contact in connector)	★ Prepare with starting switch OFF, then carry out troubleshooting without turning starting switch ON.			
			Wiring harness between STC3 (female) (16) – S2T (female) (1)	Resistance	Max. 1 Ω	
			Wiring harness between STC3 (female) (23) – S2T (female) (2)	Resistance	Max. 1 Ω	
	3	Hot short (Short circuit with 24V circuit) in wiring harness	★ Prepare with starting switch OFF, then turn starting switch ON and carry out troubleshooting.			
			Wiring harness between STC3 (female) (23) – S2T (female) (2) or circuit branch end and chassis ground	Voltage	Max. 1 V	
	4	Defective power train controller	If causes 1 – 3 are not detected, power train controller may be defective. (Since trouble is in system, troubleshooting cannot be carried out.)			

Circuit diagram related to transmission 2nd clutch ECMV

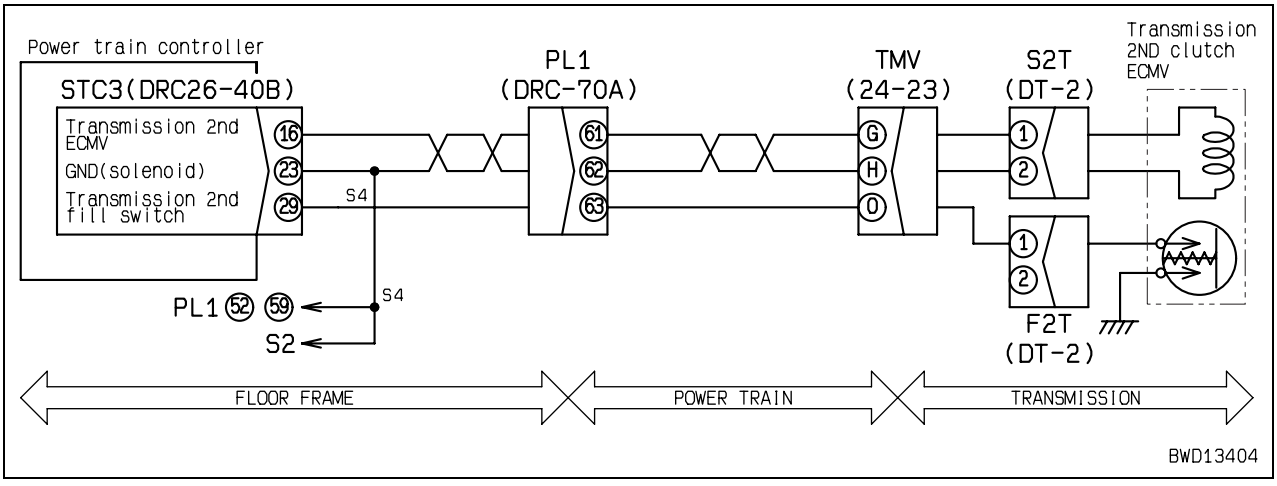

Failure code [DXH5KB] 2nd clutch ECMV: Short circuit

Action code	Failure code	Trouble	2nd clutch ECMV: Short circuit (Power train controller system)
E03	**DXH5KB**		
Contents of trouble	• When signal was output to transmission 2nd clutch ECMV solenoid circuit, abnormal current flowed.		
Action of controller	• Turns signal to transmission 2nd clutch ECMV solenoid circuit OFF. • Limits operation of engine and transmission.		
Problem that appears on machine	• Auto shift-down function does not operate. • Once machine is stopped, engine speed is limited to medium (half). • Once machine is stopped, travel is limited to F1 and R1.		
Related information	• Output to 2nd clutch ECMV solenoid can be checked with monitoring function. (Code: 31603 T/M Clutch 2nd ECMV (F/B)) • Method of reproducing failure code: Start engine + Set gear to F2 or R2.		

	Cause		Standard value in normal state/Remarks on troubleshooting		
Possible causes and standard value in normal state	1	Defective 2nd clutch ECMV solenoid (Internal short circuit)	★ Prepare with starting switch OFF, then carry out troubleshooting without turning starting switch ON.		
			S2T (male)	Resistance	
			Between (1) – (2)	3.5 – 12.5 Ω	
			Between (1) – chassis ground	Min. 1 MΩ	
	2	Ground fault in wiring harness (Contact with GND circuit)	★ Prepare with starting switch OFF, then carry out troubleshooting without turning starting switch ON.		
			Wiring harness between STC3 (female) (16) – S2T (female) (1) and chassis ground	Resistance	Min. 1 MΩ
	3	Short circuit in wiring harness (with another wiring harness)	★ Prepare with starting switch OFF, then carry out troubleshooting without turning starting switch ON.		
			Wiring harness between STC3 (female) (16) – S2T (female) (1) and between STC3 (female) (23) – S2T (female) (2)	Resistance	Min. 1 MΩ
	4	Defective power train controller	If causes 1 – 3 are not detected, power train controller may be defective. (Since trouble is in system, troubleshooting cannot be carried out.)		

Circuit diagram related to transmission 2nd clutch ECMV

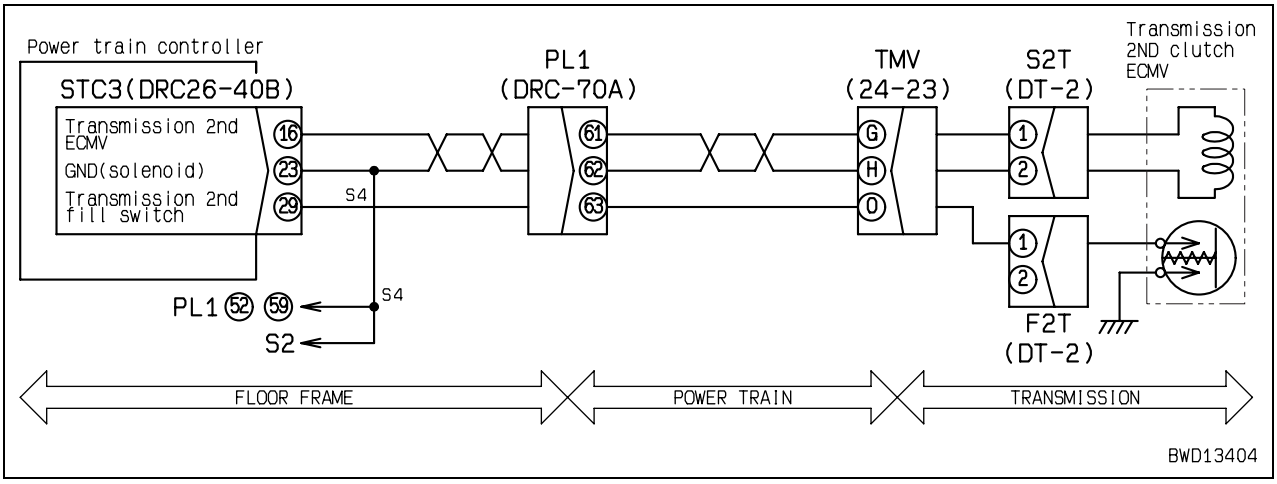

Failure code [DXH5KY] 2nd clutch ECMV: Short circuit

Action code	Failure code	Trouble	2nd clutch ECMV: Short circuit (Power train controller system)
E03	**DXH5KY**		
Contents of trouble	• When signal was output to transmission 2nd clutch ECMV solenoid circuit, abnormal current flowed.		
Action of controller	• Turns signal to transmission 2nd clutch ECMV solenoid circuit OFF. • Limits operation of engine and transmission.		
Problem that appears on machine	• Auto shift-down function does not operate. • Once machine is stopped, engine speed is limited to medium (half). • Once machine is stopped, travel is limited to F1 and R1.		
Related information	• Output to 2nd clutch ECMV solenoid can be checked with monitoring function. (Code: 31603 T/M Clutch 2nd ECMV (F/B)) • Method of reproducing failure code: Start engine + Set gear to F2 or R2.		

	Cause		Standard value in normal state/Remarks on troubleshooting		
Possible causes and standard value in normal state	1	Defective 2nd clutch ECMV solenoid (Internal short circuit)	★ Prepare with starting switch OFF, then carry out troubleshooting without turning starting switch ON.		
			S2T (male)	Resistance	
			Between (1) – (2)	3.5 – 12.5 Ω	
			Between (1) – chassis ground	Min. 1 MΩ	
	2	Hot short (Short circuit with 24V circuit) in wiring harness	★ Prepare with starting switch OFF, then turn starting switch ON and carry out troubleshooting.		
			Wiring harness between STC3 (female) (16) – S2T (female) (1) and chassis ground	Voltage	Max. 1 V
	3	Short circuit in wiring harness (with another wiring harness)	★ Prepare with starting switch OFF, then carry out troubleshooting without turning starting switch ON.		
			Wiring harness between STC3 (female) (16) – S2T (female) (1) and between STC3 (female) (23) – S2T (female) (2)	Resistance	Min. 1 MΩ
	4	Defective power train controller	If causes 1 – 3 are not detected, power train controller may be defective. (Since trouble is in system, troubleshooting cannot be carried out.)		

Circuit diagram related to transmission 2nd clutch ECMV

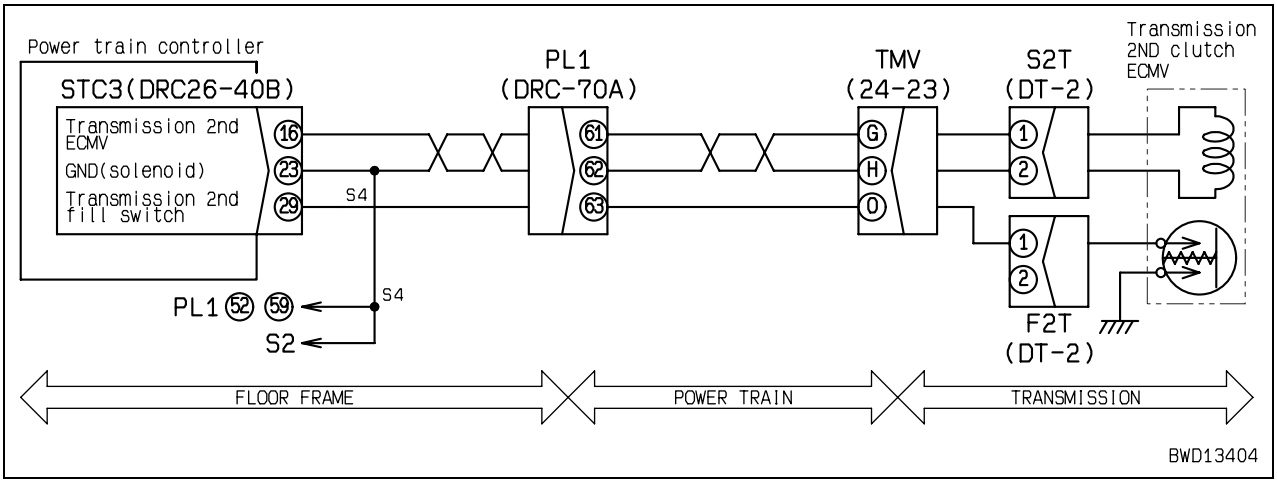

Failure code [DXH6KA] 3rd clutch ECMV: Disconnection

Action code	Failure code	Trouble	3rd clutch ECMV: Disconnection (Power train controller system)
E03	**DXH6KA**		
Contents of trouble	• When signal is output to transmission 3rd clutch ECMV solenoid circuit, no current flows.		
Action of controller	• Turns signal to transmission 3rd clutch ECMV solenoid circuit OFF. • Limits operation of engine and transmission.		
Problem that appears on machine	• Once machine is stopped, engine speed is limited to medium (half). • Once machine is stopped, travel is limited to F1 and R1.		
Related information	• Output to 3rd clutch ECMV solenoid can be checked with monitoring function. (Code: 31604 T/M Clutch 3rd ECMV (F/B)) • Method of reproducing failure code: Start engine + Set gear to F3 or R3.		

	Cause		Standard value in normal state/Remarks on troubleshooting		
Possible causes and standard value in normal state	1	Defective 3rd clutch ECMV solenoid (Internal disconnection)	★ Prepare with starting switch OFF, then carry out troubleshooting without turning starting switch ON.		
			S3T (male)	Resistance	
			Between (1) – (2)	3.5 – 12.5 Ω	
			Between (1) – chassis ground	Min. 1 MΩ	
	2	Disconnection in wiring harness (Disconnection in wiring or defective contact in connector)	★ Prepare with starting switch OFF, then carry out troubleshooting without turning starting switch ON.		
			Wiring harness between STC3 (female) (26) – S3T (female) (1)	Resistance	Max. 1 Ω
			Wiring harness between STC3 (female) (23) – S3T (female) (2)	Resistance	Max. 1 Ω
	3	Hot short (Short circuit with 24V circuit) in wiring harness	★ Prepare with starting switch OFF, then turn starting switch ON and carry out troubleshooting.		
			Wiring harness between STC3 (female) (23) – S3T (female) (2) or circuit branch end and chassis ground	Voltage	Max. 1 V
	4	Defective power train controller	If causes 1 – 3 are not detected, power train controller may be defective. (Since trouble is in system, troubleshooting cannot be carried out.)		

Circuit diagram related to transmission 3rd clutch ECMV

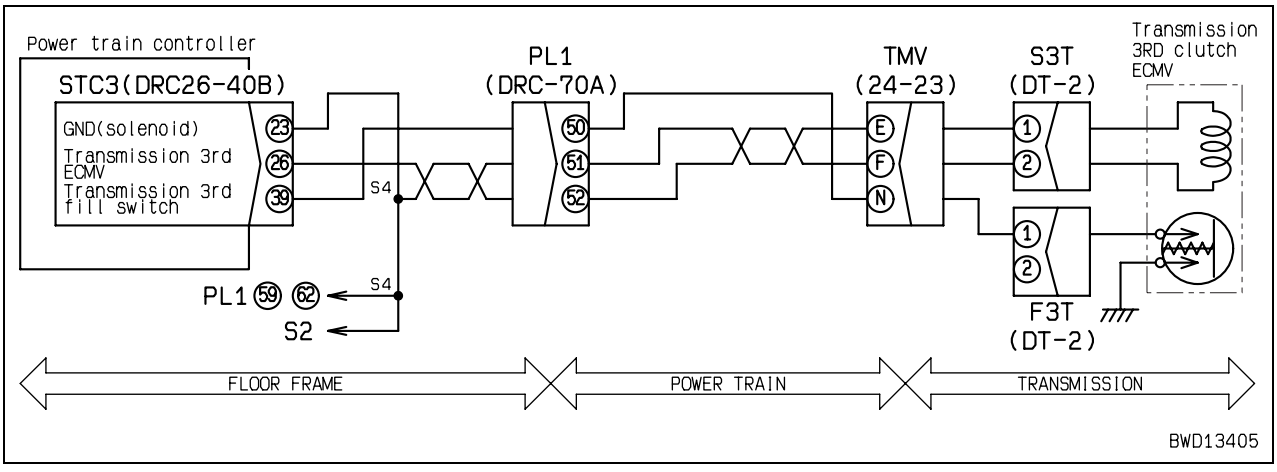

Failure code [DXH6KB] 3rd clutch ECMV: Short circuit

Action code	Failure code	Trouble	3rd clutch ECMV: Short circuit (Power train controller system)
E03	**DXH6KB**		
Contents of trouble	• When signal was output to transmission 3rd clutch ECMV solenoid circuit, abnormal current flowed.		
Action of controller	• Turns signal to transmission 3rd clutch ECMV solenoid circuit OFF. • Limits operation of engine and transmission.		
Problem that appears on machine	• Once machine is stopped, engine speed is limited to medium (half). • Once machine is stopped, travel is limited to F1 and R1.		
Related information	• Output to 3rd clutch ECMV solenoid can be checked with monitoring function. (Code: 31604 T/M Clutch 3rd ECMV (F/B)) • Method of reproducing failure code: Start engine + Set gear to F3 or R3.		

	Cause		Standard value in normal state/Remarks on troubleshooting		
Possible causes and standard value in normal state	1	Defective 3rd clutch ECMV solenoid (Internal short circuit)	★ Prepare with starting switch OFF, then carry out troubleshooting without turning starting switch ON.		
			S3T (male)	Resistance	
			Between (1) – (2)	3.5 – 12.5 Ω	
			Between (1) – chassis ground	Min. 1 MΩ	
	2	Ground fault in wiring harness (Contact with GND circuit)	★ Prepare with starting switch OFF, then carry out troubleshooting without turning starting switch ON.		
			Wiring harness between STC3 (female) (26) – S3T (female) (1) and chassis ground	Resistance	Min. 1 MΩ
	3	Short circuit in wiring harness (with another wiring harness)	★ Prepare with starting switch OFF, then carry out troubleshooting without turning starting switch ON.		
			Wiring harness between STC3 (female) (26) – S3T (female) (1) and between STC3 (female) (23) – S3T (female) (2)	Resistance	Min. 1 MΩ
	4	Defective power train controller	If causes 1 – 3 are not detected, power train controller may be defective. (Since trouble is in system, troubleshooting cannot be carried out.)		

Circuit diagram related to transmission 3rd clutch ECMV

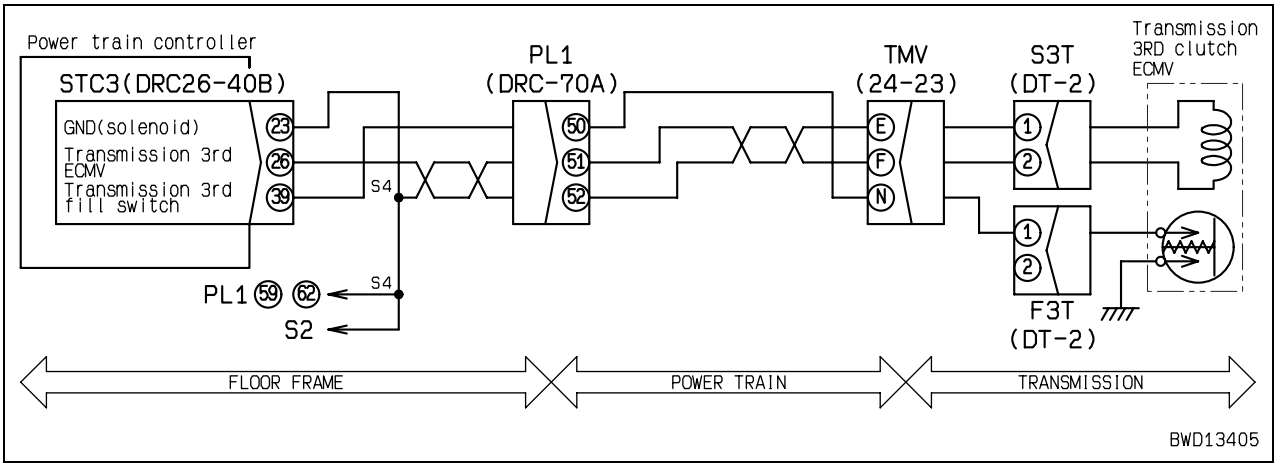

Failure code [DXH6KY] 3rd clutch ECMV: Short circuit

Action code	Failure code	Trouble	3rd clutch ECMV: Short circuit (Power train controller system)
E03	**DXH6KY**		
Contents of trouble	• When signal was output to transmission 3rd clutch ECMV solenoid circuit, abnormal current flowed.		
Action of controller	• Turns signal to transmission 3rd clutch ECMV solenoid circuit OFF. • Limits operation of engine and transmission.		
Problem that appears on machine	• Once machine is stopped, engine speed is limited to medium (half). • Once machine is stopped, travel is limited to F1 and R1.		
Related information	• Output to 3rd clutch ECMV solenoid can be checked with monitoring function. (Code: 31604 T/M Clutch 3rd ECMV (F/B)) • Method of reproducing failure code: Start engine + Set gear to F3 or R3.		

	Cause		Standard value in normal state/Remarks on troubleshooting		
Possible causes and standard value in normal state	1	Defective 3rd clutch ECMV solenoid (Internal short circuit)	★ Prepare with starting switch OFF, then carry out troubleshooting without turning starting switch ON.		
			S3T (male)	Resistance	
			Between (1) – (2)	3.5 – 12.5 Ω	
			Between (1) – chassis ground	Min. 1 MΩ	
	2	Hot short (Short circuit with 24V circuit) in wiring harness	★ Prepare with starting switch OFF, then turn starting switch ON and carry out troubleshooting.		
			Wiring harness between STC3 (female) (26) – S3T (female) (1) and chassis ground	Voltage	Max. 1 V
	3	Short circuit in wiring harness (with another wiring harness)	★ Prepare with starting switch OFF, then carry out troubleshooting without turning starting switch ON.		
			Wiring harness between STC3 (female) (26) – S3T (female) (1) and between STC3 (female) (23) – S3T (female) (2)	Resistance	Min. 1 MΩ
	4	Defective power train controller	If causes 1 – 3 are not detected, power train controller may be defective. (Since trouble is in system, troubleshooting cannot be carried out.)		

Circuit diagram related to transmission 3rd clutch ECMV

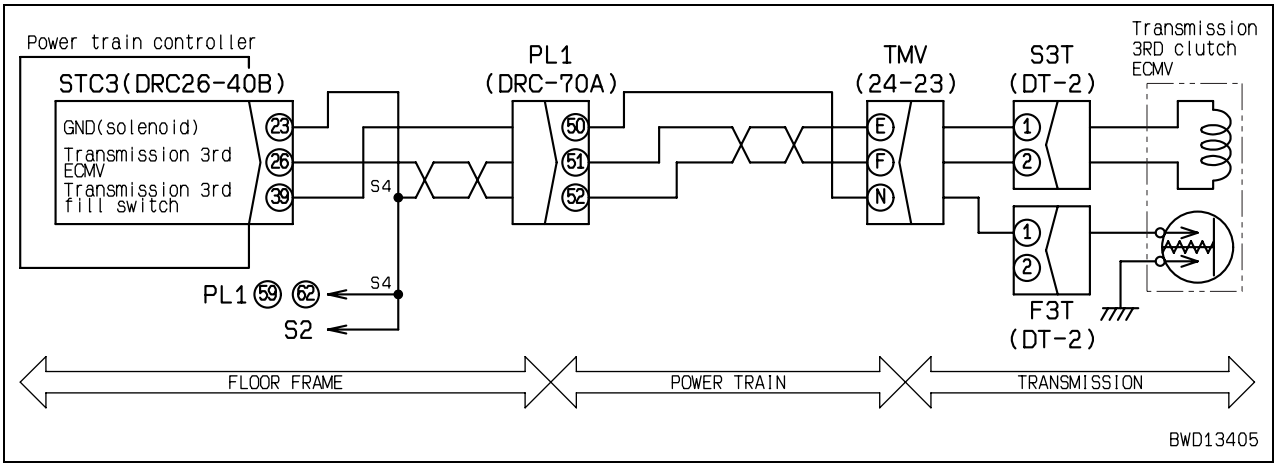

Failure code [DXH7KA] R clutch ECMV: Disconnection

Action code	Failure code	Trouble	R clutch ECMV: Disconnection (Power train controller system)
E03	**DXH7KA**		
Contents of trouble	• When signal is output to transmission R clutch ECMV solenoid circuit, no current flows.		
Action of controller	• Turns signal to transmission R clutch ECMV solenoid circuit OFF. • Limits operation of engine and transmission.		
Problem that appears on machine	• Once machine is stopped, engine speed is limited to medium (half). • Once machine is stopped, travel is limited to F1.		
Related information	• Output to R clutch ECMV solenoid can be checked with monitoring function. (Code: 31616 T/M Clutch R ECMV (F/B)) • Method of reproducing failure code: Start engine + Set gear to R (Reverse).		

	Cause		Standard value in normal state/Remarks on troubleshooting		
Possible causes and standard value in normal state	1	Defective R clutch ECMV solenoid (Internal disconnection)	★ Prepare with starting switch OFF, then carry out troubleshooting without turning starting switch ON.		
			SRT (male)	Resistance	
			Between (1) – (2)	3.5 – 12.5 Ω	
	2	Disconnection in wiring harness (Disconnection in wiring or defective contact in connector)	★ Prepare with starting switch OFF, then carry out troubleshooting without turning starting switch ON.		
			Wiring harness between STC3 (female) (37) – SRT (female) (1)	Resistance	Max. 1 Ω
			Wiring harness between STC3 (female) (13) – SRT (female) (2)	Resistance	Max. 1 Ω
	3	Hot short (Short circuit with 24V circuit) in wiring harness	★ Prepare with starting switch OFF, then turn starting switch ON and carry out troubleshooting.		
			Wiring harness between STC3 (female) (13) – SRT (female) (2) or circuit branch end and chassis ground	Voltage	Max. 1 V
	4	Defective power train controller	If causes 1 – 3 are not detected, power train controller may be defective. (Since trouble is in system, troubleshooting cannot be carried out.)		

Circuit diagram related to transmission R clutch ECMV

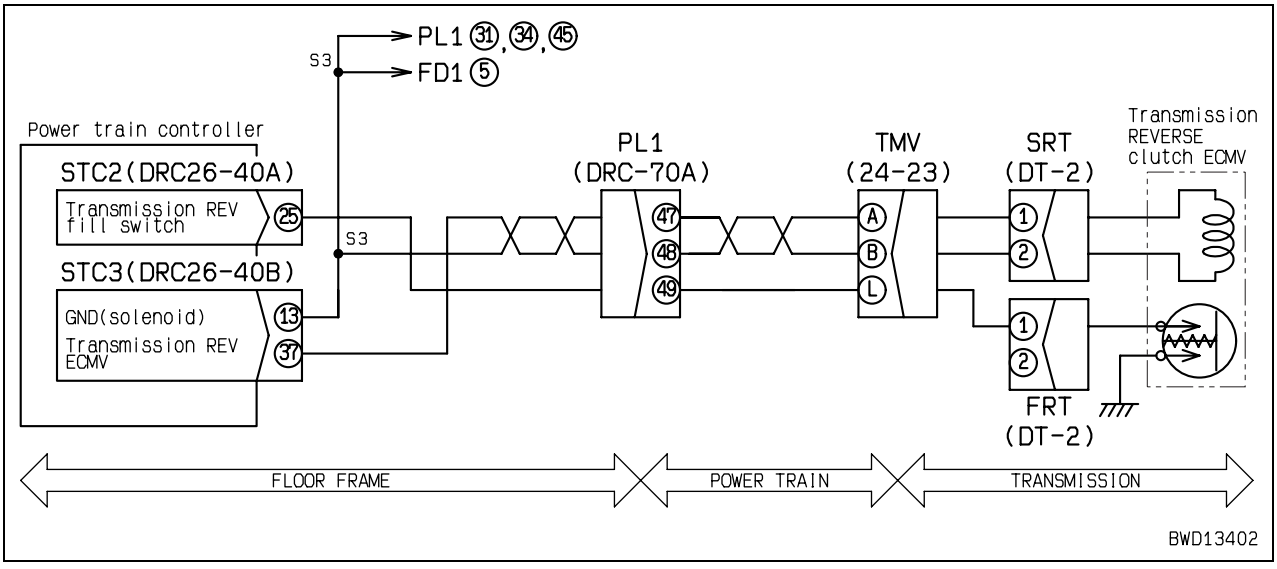

Failure code [DXH7KB] R clutch ECMV: Short circuit

Action code	Failure code	Trouble	R clutch ECMV: Short circuit (Power train controller system)
E03	**DXH7KB**		
Contents of trouble	• When signal was output to transmission R clutch ECMV solenoid circuit, abnormal current flowed.		
Action of controller	• Turns signal to transmission R clutch ECMV solenoid circuit OFF. • Limits operation of engine and transmission.		
Problem that appears on machine	• Once machine is stopped, engine speed is limited to medium (half). • Once machine is stopped, travel is limited to F1.		
Related information	• Output to R clutch ECMV solenoid can be checked with monitoring function. (Code: 31616 T/M Clutch R ECMV (F/B)) • Method of reproducing failure code: Start engine + Set gear to R (Reverse).		

	Cause		Standard value in normal state/Remarks on troubleshooting		
Possible causes and standard value in normal state	1	Defective R clutch ECMV solenoid (Internal short circuit)	★ Prepare with starting switch OFF, then carry out troubleshooting without turning starting switch ON.		
			SRT (male)	Resistance	
			Between (1) – (2)	3.5 – 12.5 Ω	
			Between (1) – chassis ground	Min. 1 MΩ	
	2	Ground fault in wiring harness (Contact with GND circuit)	★ Prepare with starting switch OFF, then carry out troubleshooting without turning starting switch ON.		
			Wiring harness between STC3 (female) (37) – SRT (female) (1) and chassis ground	Resistance	Min. 1 MΩ
	3	Short circuit in wiring harness (with another wiring harness)	★ Prepare with starting switch OFF, then carry out troubleshooting without turning starting switch ON.		
			Wiring harness between STC3 (female) (37) – SRT (female) (1) and between STC3 (female) (13) – SRT (female) (2)	Resistance	Min. 1 MΩ
	4	Defective power train controller	If causes 1 - 3 are not detected, power train controller may be defective. (Since trouble is in system, troubleshooting cannot be carried out.)		

Circuit diagram related to transmission R clutch ECMV

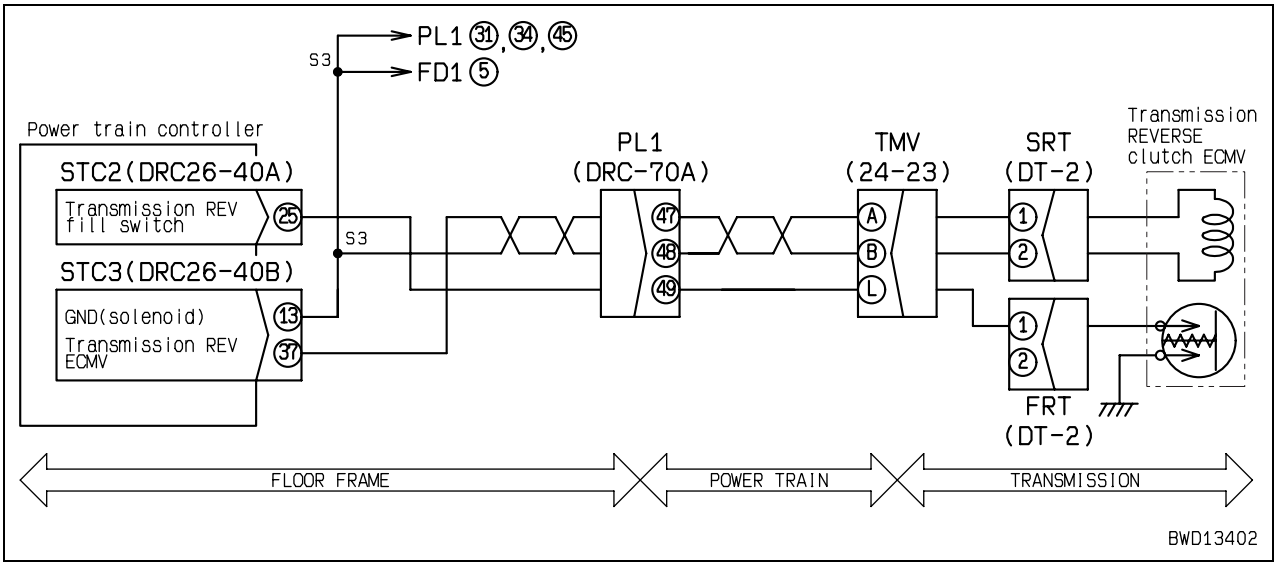

Failure code [DXH7KY] R clutch ECMV: Short circuit

Action code	Failure code	Trouble	R clutch ECMV: Short circuit (Power train controller system)
E04	**DXH7KY**		
Contents of trouble	• When signal was output to transmission R clutch ECMV solenoid circuit, abnormal current flowed.		
Action of controller	• Turns signal to transmission R clutch ECMV solenoid circuit OFF. • Limits operation of engine and transmission.		
Problem that appears on machine	• Once machine is stopped, engine speed is limited to medium (half). • Once machine is stopped, travel is limited to F1.		
Related information	• Output to R clutch ECMV solenoid can be checked with monitoring function. (Code: 31616 T/M Clutch R ECMV (F/B)) • Method of reproducing failure code: Start engine + Set gear to R (Reverse).		

	Cause		Standard value in normal state/Remarks on troubleshooting		
Possible causes and standard value in normal state	1	Defective R clutch ECMV solenoid (Internal short circuit)	★ Prepare with starting switch OFF, then carry out troubleshooting without turning starting switch ON.		
			SRT (male)	Resistance	
			Between (1) – (2)	3.5 – 12.5 Ω	
			Between (1) – chassis ground	Min. 1 MΩ	
	2	Hot short (Short circuit with 24V circuit) in wiring harness	★ Prepare with starting switch OFF, then turn starting switch ON and carry out troubleshooting.		
			Wiring harness between STC3 (female) (37) – SRT (female) (1) and chassis ground	Voltage	Max. 1 V
	3	Short circuit in wiring harness (with another wiring harness)	★ Prepare with starting switch OFF, then carry out troubleshooting without turning starting switch ON.		
			Wiring harness between STC3 (female) (37) – SRT (female) (1) and between STC3 (female) (13) – SRT (female) (2)	Resistance	Min. 1 MΩ
	4	Defective power train controller	If causes 1 – 3 are not detected, power train controller may be defective. (Since trouble is in system, troubleshooting cannot be carried out.)		

Circuit diagram related to transmission R clutch ECMV

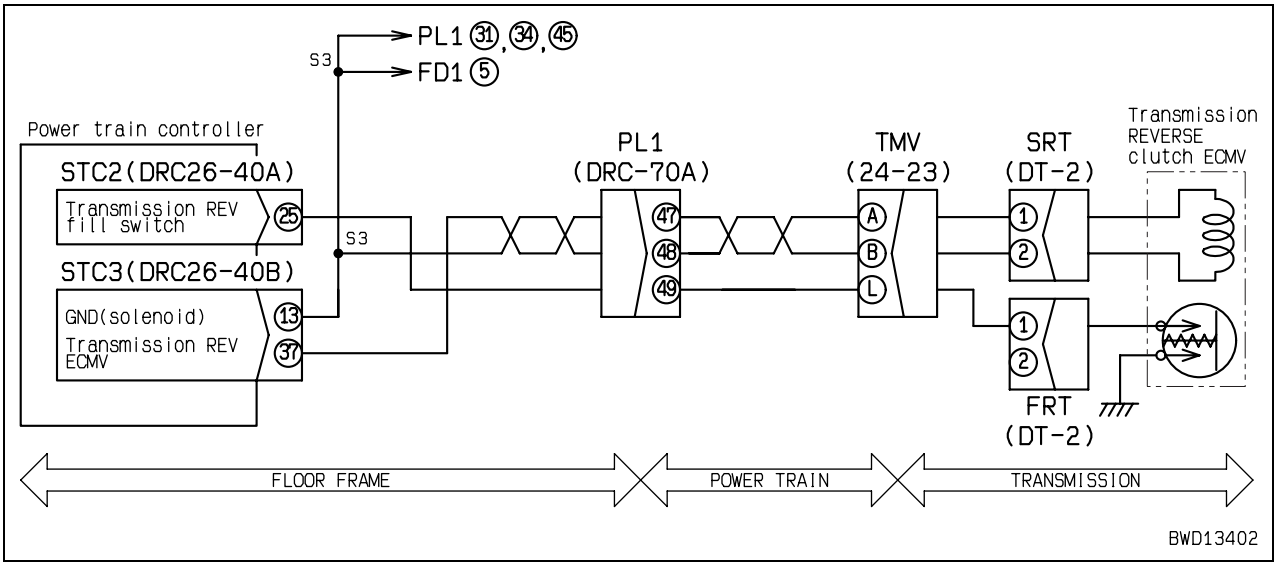

Failure code [DXH8KA] F clutch ECMV: Disconnection

Action code	Failure code	Trouble	F clutch ECMV: Disconnection (Power train controller system)
E03	**DXH8KA**		
Contents of trouble	• When signal is output to transmission F clutch ECMV solenoid circuit, no current flows.		
Action of controller	• Turns signal to transmission F clutch ECMV solenoid circuit OFF. • Limits operation of engine and transmission.		
Problem that appears on machine	• Once machine is stopped, engine speed is limited to medium (half). • Once machine is stopped, travel is limited to R1.		
Related information	• Output to F clutch ECMV solenoid can be checked with monitoring function. (Code: 31622 T/M Clutch F ECMV (F/B)) • Method of reproducing failure code: Start engine + Set gear to F (Forward).		

	Cause		Standard value in normal state/Remarks on troubleshooting		
Possible causes and standard value in normal state	1	Defective F clutch ECMV solenoid (Internal disconnection)	★ Prepare with starting switch OFF, then carry out troubleshooting without turning starting switch ON.		
			SFT (male)	Resistance	
			Between (1) – (2)	3.5 – 12.5 Ω	
	2	Disconnection in wiring harness (Disconnection in wiring or defective contact in connector)	★ Prepare with starting switch OFF, then carry out troubleshooting without turning starting switch ON.		
			Wiring harness between STC3 (female) (27) – SFT (female) (1)	Resistance	Max. 1 Ω
			Wiring harness between STC3 (female) (13) – SFT (female) (2)	Resistance	Max. 1 Ω
	3	Hot short (Short circuit with 24V circuit) in wiring harness	★ Prepare with starting switch OFF, then turn starting switch ON and carry out troubleshooting.		
			Wiring harness between STC3 (female) (13) – SFT (female) (2) or circuit branch end and chassis ground	Voltage	Max. 1 V
	4	Defective power train controller	If causes 1 – 3 are not detected, power train controller may be defective. (Since trouble is in system, troubleshooting cannot be carried out.)		

Circuit diagram related to transmission F clutch ECMV

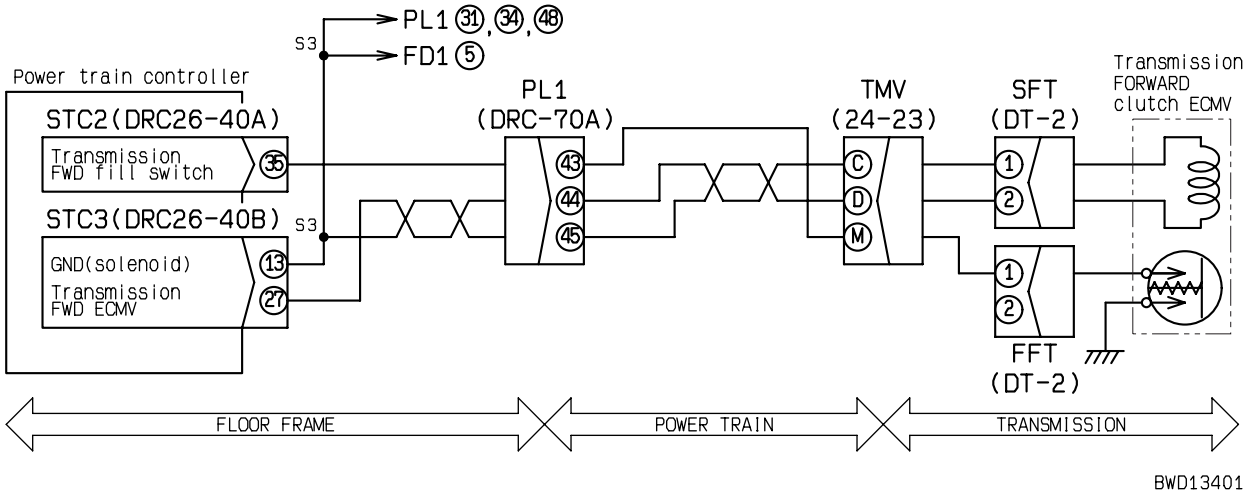

Failure code [DXH8KB] F clutch ECMV: Short circuit

Action code	Failure code	Trouble	F clutch ECMV: Short circuit (Power train controller system)
E03	**DXH8KB**		
Contents of trouble	• When signal was output to transmission F clutch ECMV solenoid circuit, abnormal current flowed.		
Action of controller	• Turns signal to transmission F clutch ECMV solenoid circuit OFF. • Limits operation of engine and transmission.		
Problem that appears on machine	• Once machine is stopped, engine speed is limited to medium (half). • Once machine is stopped, travel is limited to R1.		
Related information	• Output to F clutch ECMV solenoid can be checked with monitoring function. (Code: 31622 T/M Clutch F ECMV (F/B)) • Method of reproducing failure code: Start engine + Set gear to F (Forward).		

	Cause		Standard value in normal state/Remarks on troubleshooting		
Possible causes and standard value in normal state	1	Defective F clutch ECMV solenoid (Internal short circuit)	★ Prepare with starting switch OFF, then carry out troubleshooting without turning starting switch ON.		
			SFT (male)	Resistance	
			Between (1) – (2)	3.5 – 12.5 Ω	
			Between (1) – chassis ground	Min. 1 MΩ	
	2	Ground fault in wiring harness (Contact with GND circuit)	★ Prepare with starting switch OFF, then carry out troubleshooting without turning starting switch ON.		
			Wiring harness between STC3 (female) (27) – SFT (female) (1) and chassis ground	Resistance	Min. 1 MΩ
	3	Short circuit in wiring harness (with another wiring harness)	★ Prepare with starting switch OFF, then carry out troubleshooting without turning starting switch ON.		
			Wiring harness between STC3 (female) (27) – SFT (female) (1) and between STC3 (female) (13) – SFT (female) (2)	Resistance	Min. 1 MΩ
	4	Defective power train controller	If causes 1 – 3 are not detected, power train controller may be defective. (Since trouble is in system, troubleshooting cannot be carried out.)		

Circuit diagram related to transmission F clutch ECMV

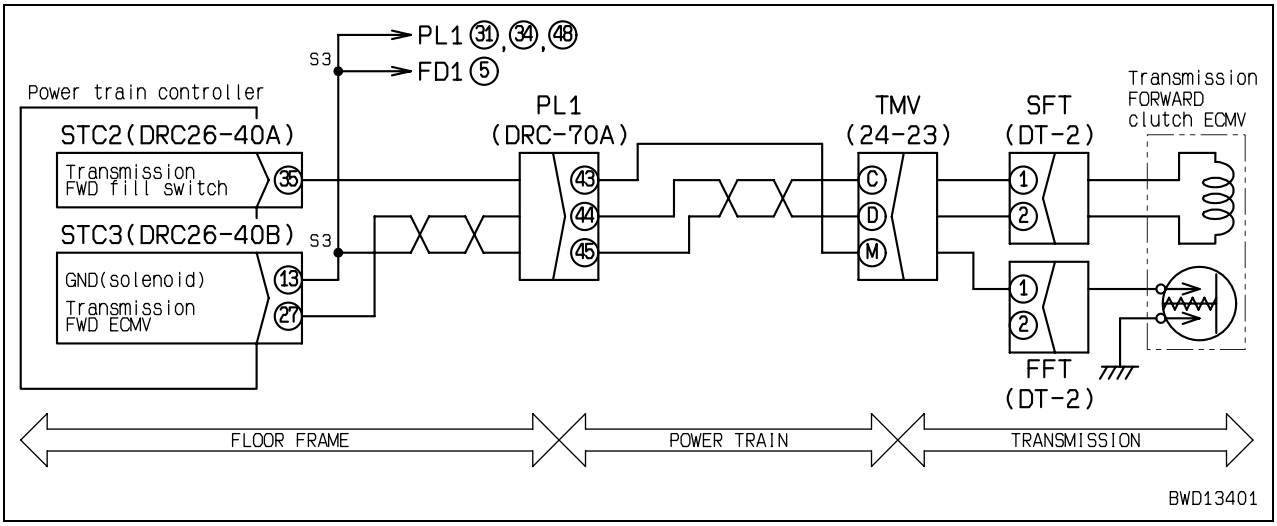

Failure code [DXH8KY] F clutch ECMV: Short circuit

Action code	Failure code	Trouble	F clutch ECMV: Short circuit (Power train controller system)
E04	**DXH8KY**		
Contents of trouble	• When signal was output to transmission F clutch ECMV solenoid circuit, abnormal current flowed.		
Action of controller	• Turns signal to transmission F clutch ECMV solenoid circuit OFF. • Limits operation of engine and transmission.		
Problem that appears on machine	• Once machine is stopped, engine speed is limited to medium (half). • Once machine is stopped, travel is limited to R1.		
Related information	• Output to F clutch ECMV solenoid can be checked with monitoring function. (Code: 31622 T/M Clutch F ECMV (F/B)) • Method of reproducing failure code: Start engine + Set gear to F (Forward).		

	Cause		Standard value in normal state/Remarks on troubleshooting		
Possible causes and standard value in normal state	1	Defective F clutch ECMV solenoid (Internal short circuit)	★ Prepare with starting switch OFF, then carry out troubleshooting without turning starting switch ON.		
			SFT (male)	Resistance	
			Between (1) – (2)	3.5 – 12.5 Ω	
			Between (1) – chassis ground	Min. 1 MΩ	
	2	Hot short (Short circuit with 24V circuit) in wiring harness	★ Prepare with starting switch OFF, then turn starting switch ON and carry out troubleshooting.		
			Wiring harness between STC3 (female) (27) – SFT (female) (1) and chassis ground	Voltage	Max. 1 V
	3	Short circuit in wiring harness (with another wiring harness)	★ Prepare with starting switch OFF, then carry out troubleshooting without turning starting switch ON.		
			Wiring harness between STC3 (female) (27) – SFT (female) (1) and between STC3 (female) (13) – SFT (female) (2)	Resistance	Min. 1 MΩ
	4	Defective power train controller	If causes 1 – 3 are not detected, power train controller may be defective. (Since trouble is in system, troubleshooting cannot be carried out.)		

Circuit diagram related to transmission F clutch ECMV

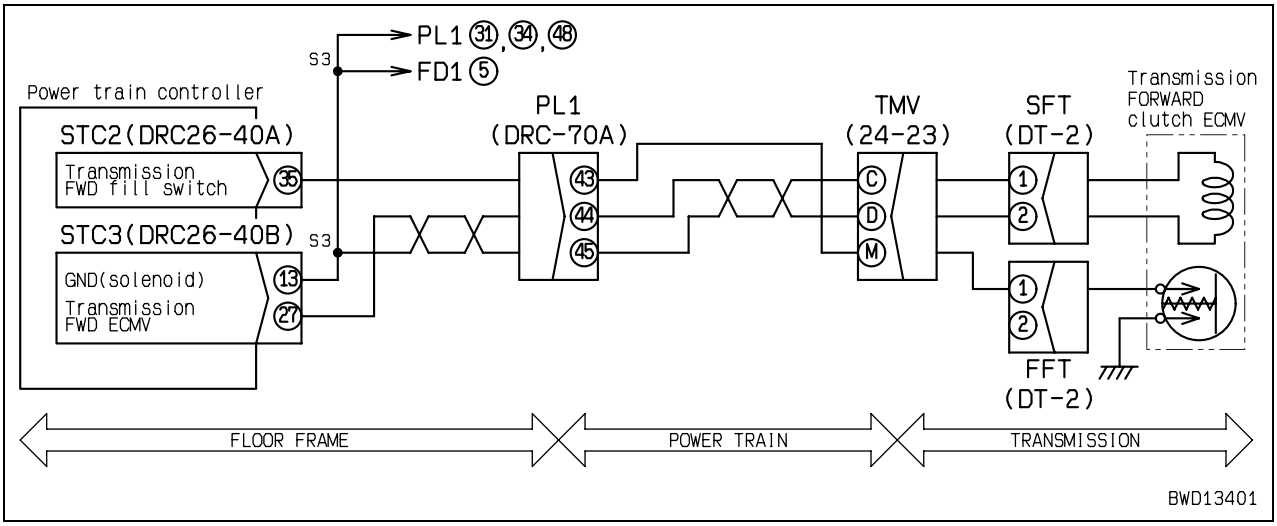

Failure code [DXHBKA] Right brake ECMV: Disconnection

Action code	Failure code	Trouble	Right brake ECMV: Disconnection (Power train controller system)
E04	**DXHBKA**		
Contents of trouble	• When signal is output to steering case right brake ECMV solenoid circuit, no current flows.		
Action of controller	• Turns signal to steering case right brake ECMV solenoid circuit OFF. • Limits operation of engine and transmission.		
Problem that appears on machine	• Brake is applied lightly during travel. • Once machine is stopped, engine speed is limited to medium (half). • Once machine is stopped, it cannot travel at all.		
Related information	• Output to right brake ECMV solenoid can be checked with monitoring function. (Code: 31618 Brake RH ECMV (F/B)) • Method of reproducing failure code: Turn starting switch ON + Operate parking brake lever (Free).		

	Cause		Standard value in normal state/Remarks on troubleshooting			
Possible causes and standard value in normal state	1	Defective right brake ECMV solenoid (Internal disconnection)	★ Prepare with starting switch OFF, then carry out troubleshooting without turning starting switch ON.			
			SBRR (male)	Resistance		
			Between (1) – (2)	3.5 – 12.5 Ω		
	2	Disconnection in wiring harness (Disconnection in wiring or defective contact in connector)	★ Prepare with starting switch OFF, then carry out troubleshooting without turning starting switch ON.			
			Wiring harness between STC3 (female) (15) – SBRR (female) (1)	Resistance	Max. 1 Ω	
			Wiring harness between STC3 (female) (3) – SBRR (female) (2)	Resistance	Max. 1 Ω	
	3	Hot short (Short circuit with 24V circuit) in wiring harness	★ Prepare with starting switch OFF, then turn starting switch ON and carry out troubleshooting.			
			Wiring harness between STC3 (female) (15) – SBRR (female) (1) and chassis ground	Voltage	Max. 1 V	
	4	Defective power train controller	★ Prepare with starting switch OFF, then carry out troubleshooting without turning starting switch ON.			
			STC3 (female)	Resistance		
			Between (15) – (3)	3.5 – 12.5 Ω		

Circuit diagram related to steering case right brake ECMV

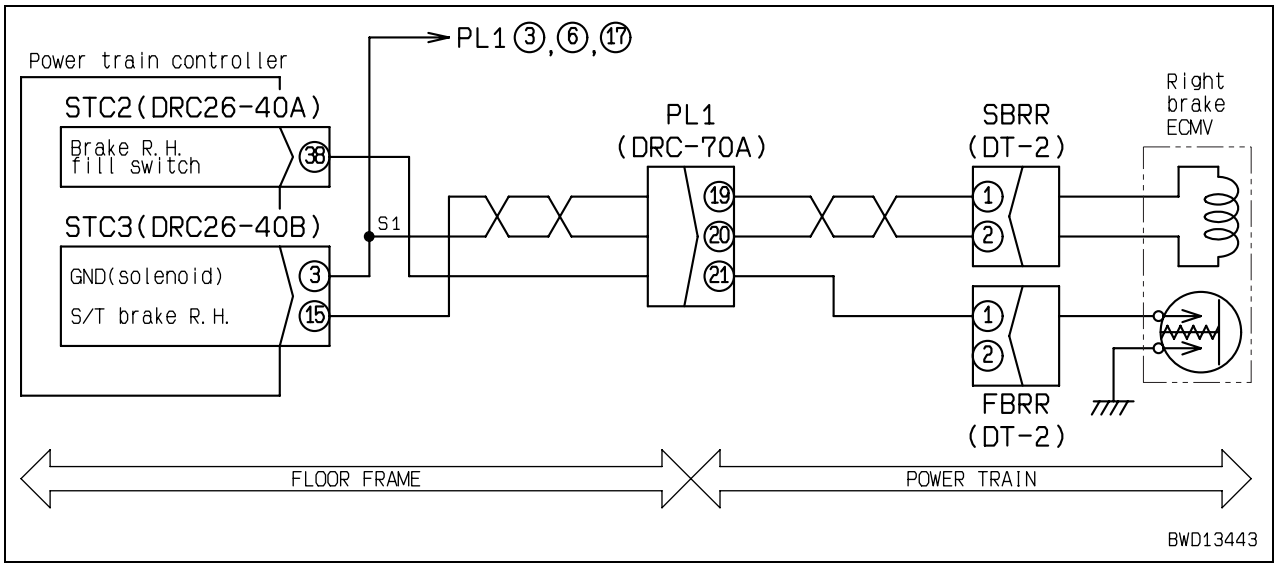

Failure code [DXHBKB] Right brake ECMV: Short circuit

Action code	Failure code	Trouble	Right brake ECMV: Short circuit (Power train controller system)
E04	**DXHBKB**		
Contents of trouble	• When signal was output to steering case right brake ECMV solenoid circuit, abnormal current flowed.		
Action of controller	• Turns signal to steering case right brake ECMV solenoid circuit OFF. • Limits operation of engine and transmission.		
Problem that appears on machine	• Brake is applied lightly during travel. • Once machine is stopped, engine speed is limited to medium (half). • Once machine is stopped, it cannot travel at all.		
Related information	• Output to right brake ECMV solenoid can be checked with monitoring function. (Code: 31618 Brake RH ECMV (F/B)) • Method of reproducing failure code: Turn starting switch ON + Operate parking brake lever (Free).		

	Cause		Standard value in normal state/Remarks on troubleshooting			
Possible causes and standard value in normal state	1	Defective right brake ECMV solenoid (Internal short circuit)	★ Prepare with starting switch OFF, then carry out troubleshooting without turning starting switch ON.			
			SBRR (male)	Resistance		
			Between (1) – (2)	3.5 – 12.5 Ω		
			Between (1) – chassis ground	Min. 1 MΩ		
	2	Ground fault in wiring harness (Contact with GND circuit)	★ Prepare with starting switch OFF, then carry out troubleshooting without turning starting switch ON.			
			Wiring harness between STC3 (female) (15) – SBRR (female) (1) and chassis ground	Resistance	Min. 1 MΩ	
	3	Short circuit in wiring harness (with another wiring harness)	★ Prepare with starting switch OFF, then carry out troubleshooting without turning starting switch ON.			
			Wiring harness between STC3 (female) (15) – SBRR (female) (1) and between STC3 (female) (3) – SBRR (female) (2)	Resistance	Min. 1 MΩ	
	4	Defective power train controller	★ Prepare with starting switch OFF, then carry out troubleshooting without turning starting switch ON.			
			STC3 (female)	Resistance		
			Between (15) – (3)	3.5 – 12.5 Ω		
			Between (15) – chassis ground	Min. 1 MΩ		

Circuit diagram related to steering case right brake ECMV

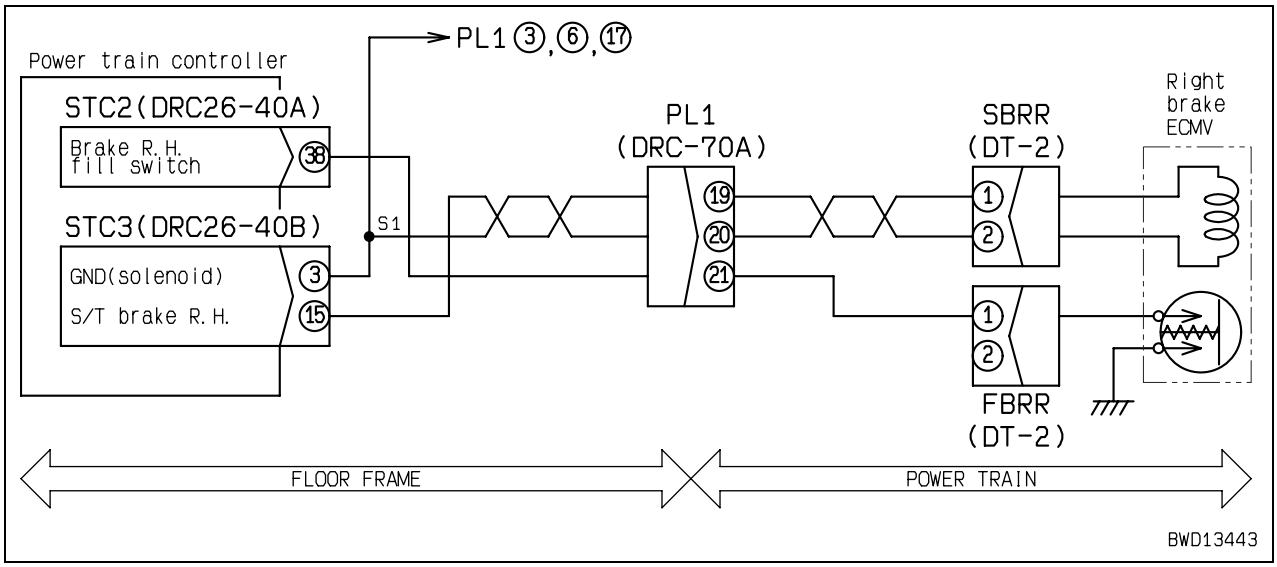

Failure code [DXHBKY] Right brake ECMV: Short circuit

Action code	Failure code	Trouble	Right brake ECMV: Short circuit (Power train controller system)
E04	**DXHBKY**		
Contents of trouble	• When signal was output to steering case right brake ECMV solenoid circuit, abnormal current flowed.		
Action of controller	• Turns signal to steering case right brake ECMV solenoid circuit OFF. • Limits operation of engine and transmission.		
Problem that appears on machine	• Brake is applied lightly during travel. • Once machine is stopped, engine speed is limited to medium (half). • Once machine is stopped, it cannot travel at all.		
Related information	• Output to right brake ECMV solenoid can be checked with monitoring function. (Code: 31618 Brake RH ECMV (F/B)) • Method of reproducing failure code: Turn starting switch ON + Operate parking brake lever (Free).		

	Cause		Standard value in normal state/Remarks on troubleshooting			
Possible causes and standard value in normal state	1	Defective right brake ECMV solenoid (Internal short circuit)	★ Prepare with starting switch OFF, then carry out troubleshooting without turning starting switch ON.			
			SBRR (male)	Resistance		
			Between (1) – (2)	3.5 – 12.5 Ω		
			Between (1) – chassis ground	Min. 1 MΩ		
	2	Hot short (Short circuit with 24V circuit) in wiring harness	★ Prepare with starting switch OFF, then turn starting switch ON and carry out troubleshooting.			
			Wiring harness between STC3 (female) (15) – SBRR (female) (1) and chassis ground	Voltage	Max. 1 V	
	3	Short circuit in wiring harness (with another wiring harness)	★ Prepare with starting switch OFF, then carry out troubleshooting without turning starting switch ON.			
			Wiring harness between STC3 (female) (15) – SBRR (female) (1) and between STC3 (female) (3) – SBRR (female) (2)	Resistance	Min. 1 MΩ	
	4	Defective power train controller	★ Prepare with starting switch OFF, then carry out troubleshooting without turning starting switch ON.			
			STC3 (female)	Resistance		
			Between (15) – (3)	3.5 – 12.5 Ω		
			Between (15) – chassis ground	Min. 1 MΩ		

Circuit diagram related to steering case right brake ECMV

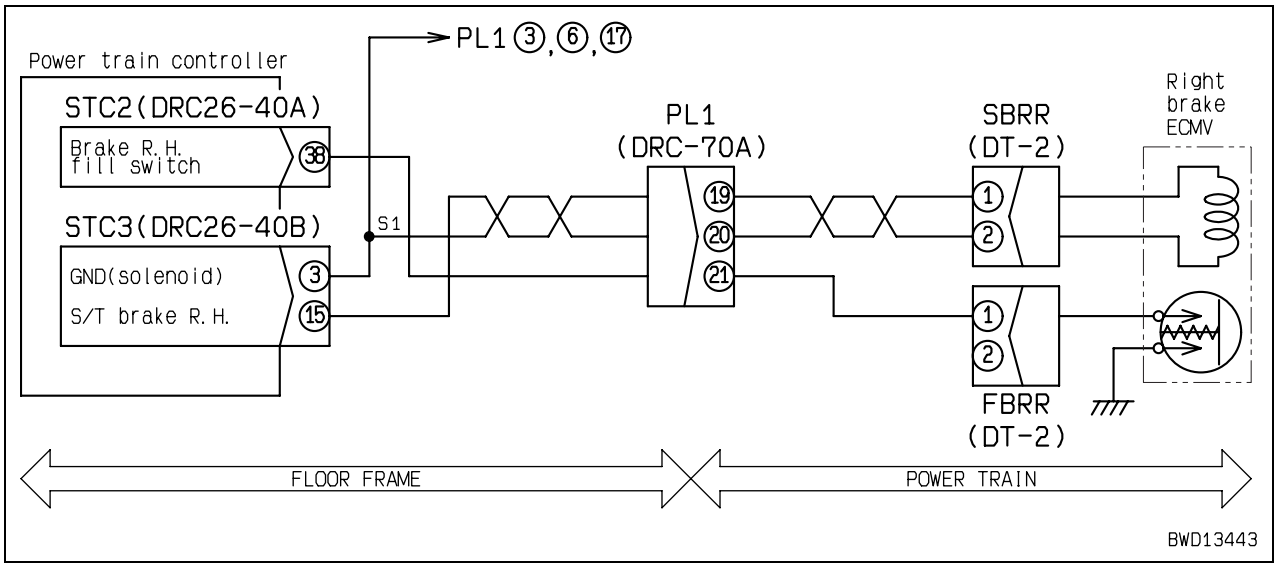

Failure code [DXHCKA] Left brake ECMV: Disconnection

Action code	Failure code	Trouble	Left brake ECMV: Disconnection (Power train controller system)
E04	**DXHCKA**		
Contents of trouble	• When signal is output to steering case left brake ECMV solenoid circuit, no current flows.		
Action of controller	• Turns signal to steering case left brake ECMV solenoid circuit OFF. • Limits operation of engine and transmission.		
Problem that appears on machine	• Brake is applied lightly during travel. • Once machine is stopped, engine speed is limited to medium (half). • Once machine is stopped, it cannot travel at all.		
Related information	• Output to left brake ECMV solenoid can be checked with monitoring function. (Code: 31619 Brake LH ECMV (F/B)) • Method of reproducing failure code: Turn starting switch ON + Operate parking brake lever (Free).		

	Cause		Standard value in normal state/Remarks on troubleshooting			
Possible causes and standard value in normal state	1	Defective left brake ECMV solenoid (Internal disconnection)	★ Prepare with starting switch OFF, then carry out troubleshooting without turning starting switch ON.			
			SBRL (male)	Resistance		
			Between (1) – (2)	3.5 – 12.5 Ω		
	2	Disconnection in wiring harness (Disconnection in wiring or defective contact in connector)	★ Prepare with starting switch OFF, then carry out troubleshooting without turning starting switch ON.			
			Wiring harness between STC3 (female) (5) – SBRL (female) (1)	Resistance	Max. 1 Ω	
			Wiring harness between STC3 (female) (3) – SBRL (female) (2)	Resistance	Max. 1 Ω	
	3	Hot short (Short circuit with 24V circuit) in wiring harness	★ Prepare with starting switch OFF, then turn starting switch ON and carry out troubleshooting.			
			Wiring harness between STC3 (female) (5) – SBRL (female) (1) and chassis ground	Voltage	Max. 1 V	
	4	Defective power train controller	★ Prepare with starting switch OFF, then carry out troubleshooting without turning starting switch ON.			
			STC3 (female)	Resistance		
			Between (5) – (3)	3.5 – 12.5 Ω		

Circuit diagram related to steering case left brake ECMV

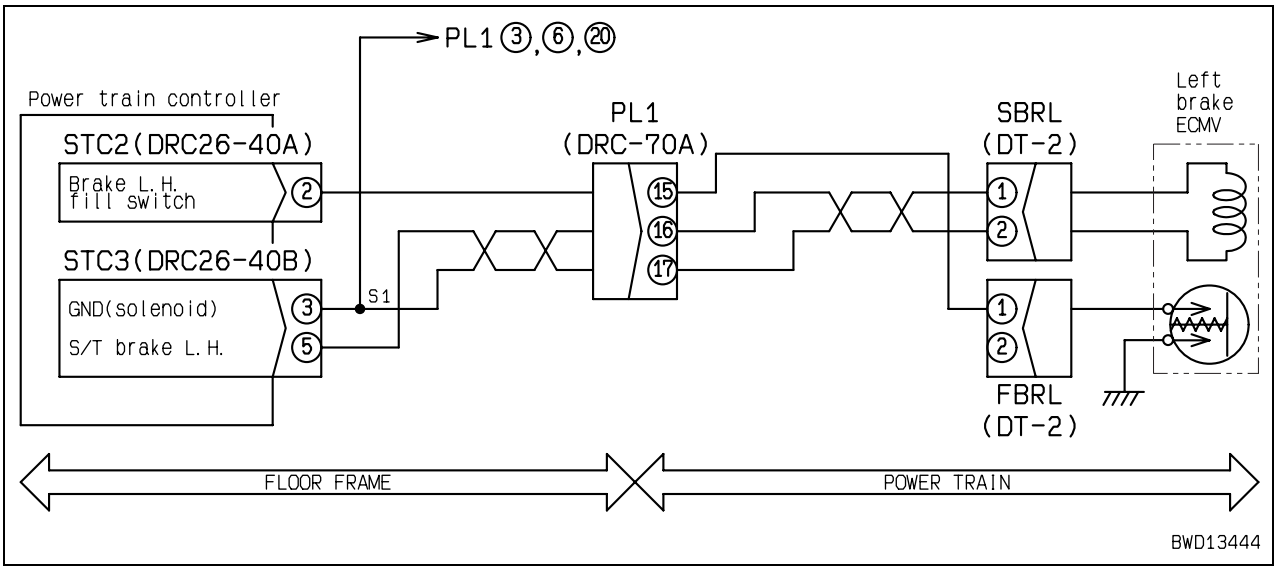

Failure code [DXHCKB] Left brake ECMV: Short circuit

Action code	Failure code	Trouble	Left brake ECMV: Short circuit (Power train controller system)
E04	**DXHCKB**		
Contents of trouble	• When signal was output to steering case left brake ECMV solenoid circuit, abnormal current flowed.		
Action of controller	• Turns signal to steering case left brake ECMV solenoid circuit OFF. • Limits operation of engine and transmission.		
Problem that appears on machine	• Brake is applied lightly during travel. • Once machine is stopped, engine speed is limited to medium (half). • Once machine is stopped, it cannot travel at all.		
Related information	• Output to left brake ECMV solenoid can be checked with monitoring function. (Code: 31619 Brake LH ECMV (F/B)) • Method of reproducing failure code: Turn starting switch ON + Operate parking brake lever (Free).		

	Cause		Standard value in normal state/Remarks on troubleshooting			
Possible causes and standard value in normal state	1	Defective left brake ECMV solenoid (Internal short circuit)	★ Prepare with starting switch OFF, then carry out troubleshooting without turning starting switch ON.			
			SBRL (male)	Resistance		
			Between (1) – (2)	3.5 – 12.5 Ω		
			Between (1) – chassis ground	Min. 1 MΩ		
	2	Ground fault in wiring harness (Contact with GND circuit)	★ Prepare with starting switch OFF, then carry out troubleshooting without turning starting switch ON.			
			Wiring harness between STC3 (female) (5) – SBRL (female) (1) and chassis ground	Resistance	Min. 1 MΩ	
	3	Short circuit in wiring harness (with another wiring harness)	★ Prepare with starting switch OFF, then carry out troubleshooting without turning starting switch ON.			
			Wiring harness between STC3 (female) (5) – SBRL (female) (1) and between STC3 (female) (3) – SBRL (female) (2)	Resistance	Min. 1 MΩ	
	4	Defective power train controller	★ Prepare with starting switch OFF, then carry out troubleshooting without turning starting switch ON.			
			STC3 (female)	Resistance		
			Between (5) – (3)	3.5 – 12.5 Ω		
			Between (5) – chassis ground	Min. 1 MΩ		

Circuit diagram related to steering case left brake ECMV

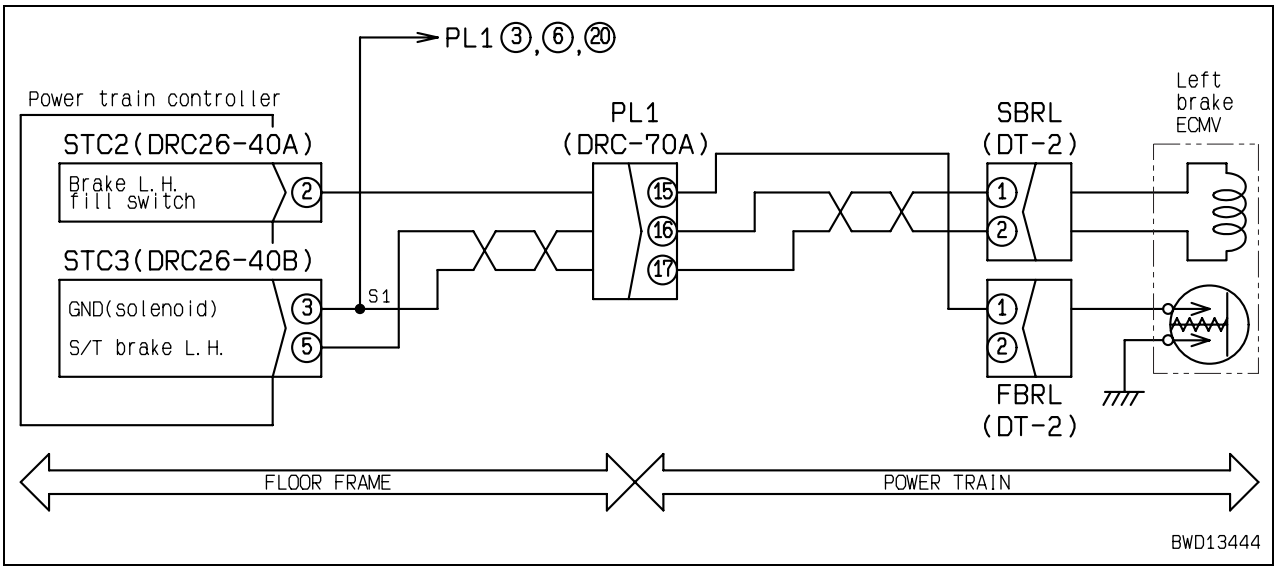

Failure code [DXHCKY] Left brake ECMV: Short circuit

Action code	Failure code	Trouble	Left brake ECMV: Short circuit (Power train controller system)
E04	**DXHCKY**		
Contents of trouble	• When signal was output to steering case left brake ECMV solenoid circuit, abnormal current flowed.		
Action of controller	• Turns signal to steering case left brake ECMV solenoid circuit OFF. • Limits operation of engine and transmission.		
Problem that appears on machine	• Brake is applied lightly during travel. • Once machine is stopped, engine speed is limited to medium (half). • Once machine is stopped, it cannot travel at all.		
Related information	• Output to left brake ECMV solenoid can be checked with monitoring function. (Code: 31619 Brake LH ECMV (F/B)) • Method of reproducing failure code: Turn starting switch ON + Operate parking brake lever (Free).		

	Cause		Standard value in normal state/Remarks on troubleshooting			
Possible causes and standard value in normal state	1	Defective left brake ECMV solenoid (Internal short circuit)	★ Prepare with starting switch OFF, then carry out troubleshooting without turning starting switch ON.			
			SBRL (male)	Resistance		
			Between (1) – (2)	3.5 – 12.5 Ω		
			Between (1) – chassis ground	Min. 1 MΩ		
	2	Hot short (Short circuit with 24V circuit) in wiring harness	★ Prepare with starting switch OFF, then turn starting switch ON and carry out troubleshooting.			
			Wiring harness between STC3 (female) (5) – SBRL (female) (1) and chassis ground		Voltage	Max. 1 V
	3	Short circuit in wiring harness (with another wiring harness)	★ Prepare with starting switch OFF, then carry out troubleshooting without turning starting switch ON.			
			Wiring harness between STC3 (female) (5) – SBRL (female) (1) and between STC3 (female) (3) – SBRL (female) (2)		Resistance	Min. 1 MΩ
	4	Defective power train controller	★ Prepare with starting switch OFF, then carry out troubleshooting without turning starting switch ON.			
			STC3 (female)	Resistance		
			Between (5) – (3)	3.5 – 12.5 Ω		
			Between (5) – chassis ground	Min. 1 MΩ		

Circuit diagram related to steering case left brake ECMV

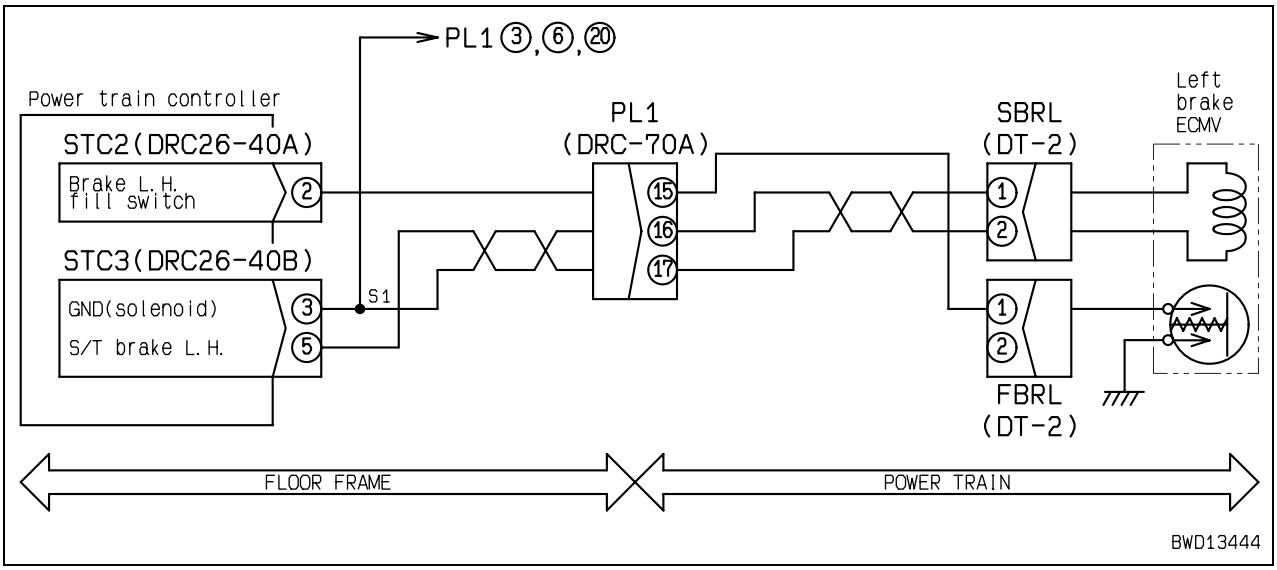

Failure code [DXHRKA] Blade up EPC: Disconnection

Action code	Failure code	Trouble	Blade up EPC: Disconnection (Work equipment controller system)
E03	**DXHRKA**		
Contents of trouble	• When signal is output to blade lift-up EPC solenoid circuit, no current flows.		
Action of controller	• Turns signal to blade lift-up EPC solenoid circuit OFF. • Limits operation of engine and transmission.		
Problem that appears on machine	• Blade cannot be lifted up. • Once machine is stopped, engine speed is limited to medium (half). • Once machine is stopped, travel is limited to R1.		
Related information	• Output to blade lift-up EPC solenoid can be checked with monitoring function. (Code: 71001 Blade Raise EPC (F/B)) • Method of reproducing failure code: Turn starting switch ON + Operate blade control lever (Raise).		

	Cause		Standard value in normal state/Remarks on troubleshooting			
Possible causes and standard value in normal state	1	Defective blade lift-up EPC solenoid (Internal disconnection)	★ Prepare with starting switch OFF, then carry out troubleshooting without turning starting switch ON.			
			WEP1 (male)	Resistance		
			Between (1) – (2)	4.5 – 14.5 Ω		
	2	Disconnection in wiring harness (Disconnection in wiring or defective contact in connector)	★ Prepare with starting switch OFF, then carry out troubleshooting without turning starting switch ON.			
			Wiring harness between WEC3 (female) (6) – WEP1 (female) (1)	Resistance	Max. 1 Ω	
			Wiring harness between WEC3 (female) (13) – WEP1 (female) (2)	Resistance	Max. 1 Ω	
	3	Defective work equipment controller	★ Prepare with starting switch OFF, then carry out troubleshooting without turning starting switch ON.			
			WEC3 (female)	Resistance		
			Between (6) – (13)	4.5 – 14.5 Ω		

Circuit diagram related to blade lift-up EPC solenoid

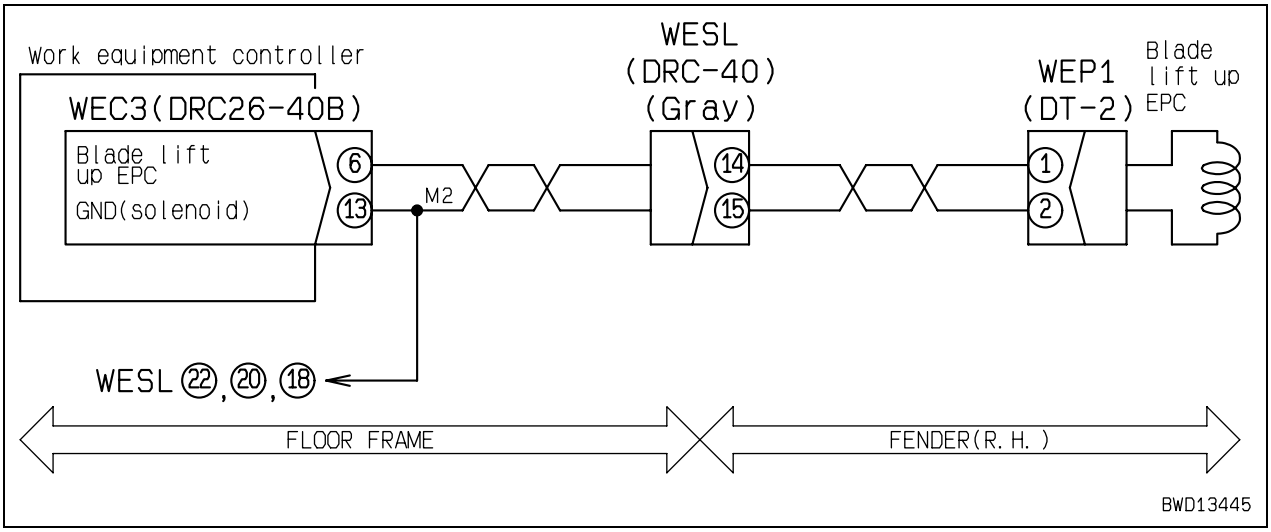

Failure code [DXHRKB] Blade up EPC: Short circuit

Action code	Failure code	Trouble	Blade up EPC: Short circuit (Work equipment controller system)
E03	**DXHRKB**		
Contents of trouble	• When signal was output to blade lift-up EPC solenoid circuit, abnormal current flowed.		
Action of controller	• Turns signal to blade lift-up EPC solenoid circuit OFF. • Limits operation of engine and transmission.		
Problem that appears on machine	• Blade cannot be lifted up. • Once machine is stopped, engine speed is limited to medium (half). • Once machine is stopped, travel is limited to R1.		
Related information	• Output to blade lift-up EPC solenoid can be checked with monitoring function. (Code: 71001 Blade Raise EPC (F/B)) • Method of reproducing failure code: Turn starting switch ON + Operate blade control lever (Raise).		

	Cause		Standard value in normal state/Remarks on troubleshooting			
Possible causes and standard value in normal state	1	Defective blade lift-up EPC solenoid (Internal short circuit)	★ Prepare with starting switch OFF, then carry out troubleshooting without turning starting switch ON.			
			WEP1 (male)	Resistance		
			Between (1) – (2)	4.5 – 14.5 Ω		
			Between (1) – chassis ground	Min. 1 MΩ		
	2	Ground fault in wiring harness (Contact with GND circuit)	★ Prepare with starting switch OFF, then carry out troubleshooting without turning starting switch ON.			
			Wiring harness between WEC3 (female) (6) – WEP1 (female) (1) and chassis ground	Resistance	Min. 1 MΩ	
	3	Defective work equipment controller	★ Prepare with starting switch OFF, then carry out troubleshooting without turning starting switch ON.			
			WEC3 (female)	Resistance		
			Between (6) – (13)	4.5 – 14.5 Ω		
			Between (6) – chassis ground	Min. 1 MΩ		

Circuit diagram related to blade lift-up EPC solenoid

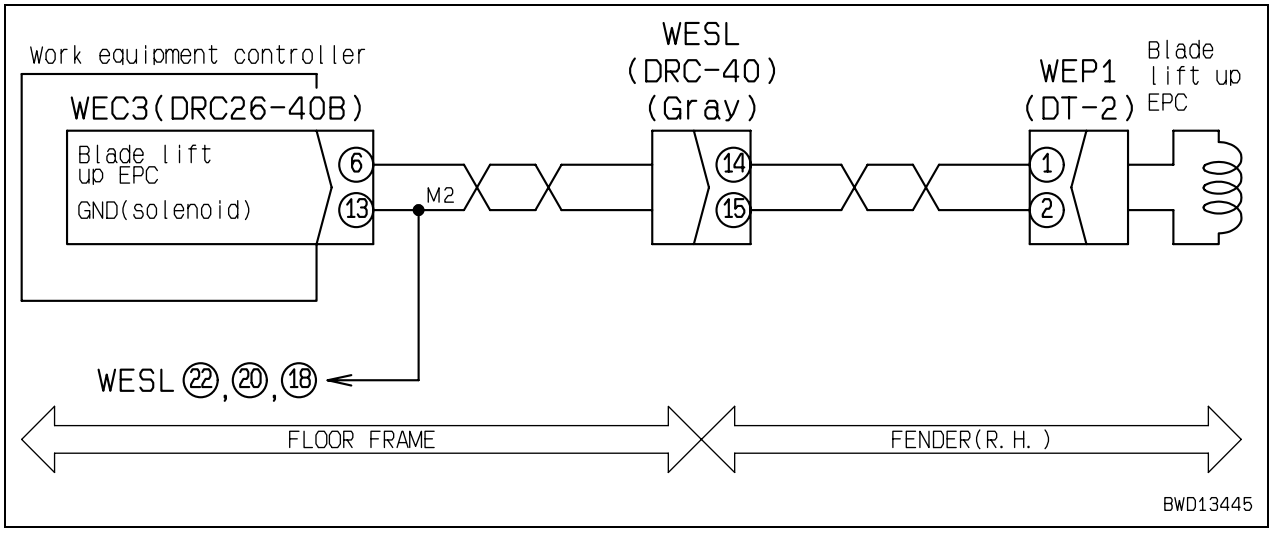

Failure code [DXHRKY] Blade up EPC: Short circuit

Action code	Failure code	Trouble	Blade up EPC: Short circuit (Work equipment controller system)
E03	**DXHRKY**		
Contents of trouble	• When signal was output to blade lift-up EPC solenoid circuit, abnormal current flowed.		
Action of controller	• Turns signal to blade lift-up EPC solenoid circuit OFF. • Limits operation of engine and transmission.		
Problem that appears on machine	• Blade cannot be lifted up. • Once machine is stopped, engine speed is limited to medium (half). • Once machine is stopped, travel is limited to R1.		
Related information	• Output to blade lift-up EPC solenoid can be checked with monitoring function. (Code: 71001 Blade Raise EPC (F/B)) • Method of reproducing failure code: Turn starting switch ON + Operate blade control lever (Raise).		

	Cause		Standard value in normal state/Remarks on troubleshooting			
Possible causes and standard value in normal state	1	Defective blade lift-up EPC solenoid (Internal short circuit)	★ Prepare with starting switch OFF, then carry out troubleshooting without turning starting switch ON.			
			WEP1 (male)	Resistance		
			Between (1) – (2)	4.5 – 14.5 Ω		
			Between (1) – chassis ground	Min. 1 MΩ		
	2	Hot short (Short circuit with 24V circuit) in wiring harness	★ Prepare with starting switch OFF, then turn starting switch ON and carry out troubleshooting.			
			Wiring harness between WEC3 (female) (6) – WEP1 (female) (1) and chassis ground		Voltage	Max. 1 V
	3	Defective work equipment controller	★ Prepare with starting switch OFF, then carry out troubleshooting without turning starting switch ON.			
			WEC3 (female)	Resistance		
			Between (6) - (13)	4.5 – 14.5 Ω		
			Between (6) - chassis ground	Min. 1 MΩ		

Circuit diagram related to blade lift-up EPC solenoid

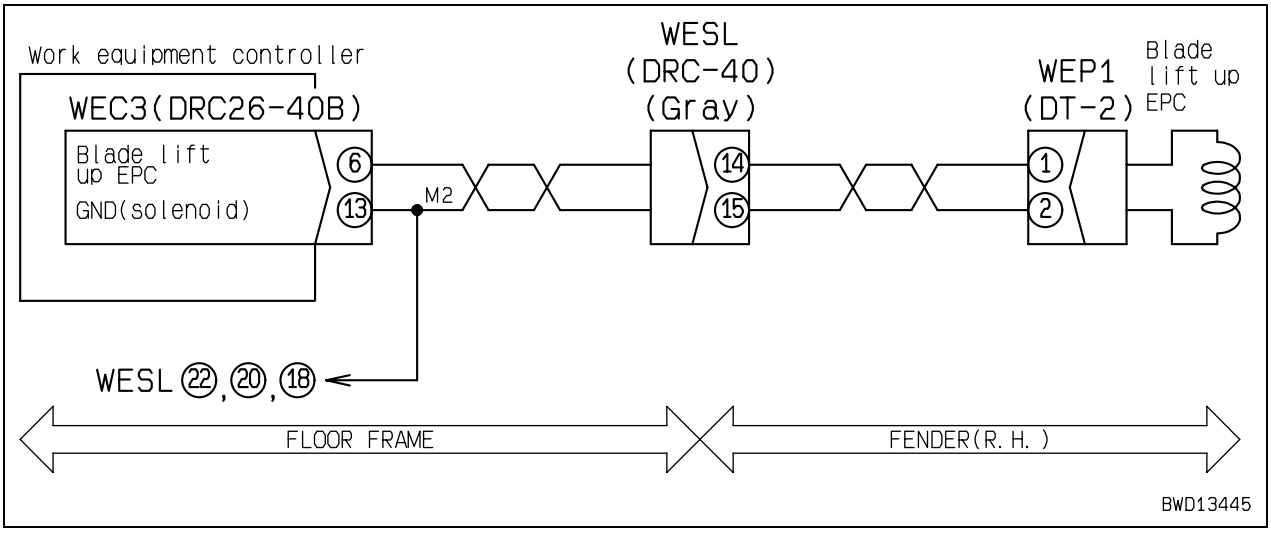

Failure code [DXHSKA] Blade down EPC: Disconnection

Action code	Failure code	Trouble	Blade down EPC: Disconnection (Work equipment controller system)
E03	**DXHSKA**		
Contents of trouble	• When signal is output to blade lift-down EPC solenoid circuit, no current flows.		
Action of controller	• Turns signal to blade lift-down EPC solenoid circuit OFF. • Limits operation of engine and transmission.		
Problem that appears on machine	• Blade cannot be lifted down. • Once machine is stopped, engine speed is limited to medium (half). • Once machine is stopped, travel is limited to R1.		
Related information	• Output to blade lift-down EPC solenoid can be checked with monitoring function. (Code: 71003 Blade Down EPC (F/B)) • Method of reproducing failure code: Turn starting switch ON + Operate blade control lever (Lower).		

	Cause		Standard value in normal state/Remarks on troubleshooting			
Possible causes and standard value in normal state	1	Defective blade lift-down EPC solenoid (Internal disconnection)	★ Prepare with starting switch OFF, then carry out troubleshooting without turning starting switch ON.			
			WEP2 (male)	Resistance		
			Between (1) – (2)	4.5 – 14.5 Ω		
	2	Disconnection in wiring harness (Disconnection in wiring or defective contact in connector)	★ Prepare with starting switch OFF, then carry out troubleshooting without turning starting switch ON.			
			Wiring harness between WEC3 (female) (16) – WEP2 (female) (1)	Resistance	Max. 1 Ω	
			Wiring harness between WEC3 (female) (13) – WEP2 (female) (2)	Resistance	Max. 1 Ω	
	3	Defective work equipment controller	★ Prepare with starting switch OFF, then carry out troubleshooting without turning starting switch ON.			
			WEC3 (female)	Resistance		
			Between (16) – (13)	4.5 – 14.5 Ω		

Circuit diagram related to blade lift-down EPC solenoid

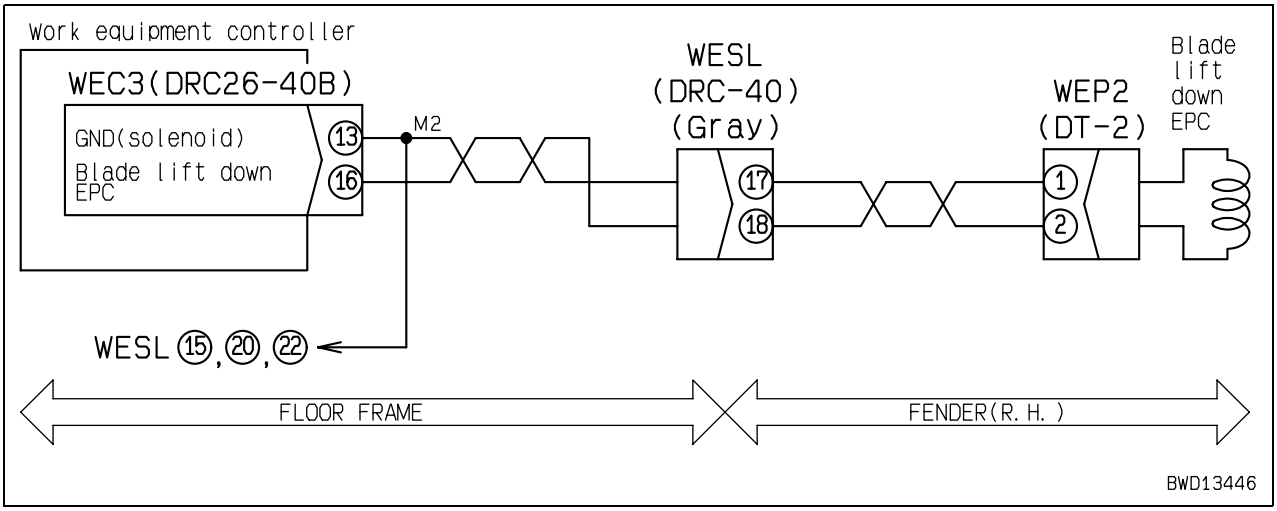

Failure code [DXHSKB] Blade down EPC: Short circuit

Action code	Failure code	Trouble	Blade down EPC: Short circuit (Work equipment controller system)
E03	**DXHSKB**		
Contents of trouble	• When signal was output to blade lift-down EPC solenoid circuit, abnormal current flowed.		
Action of controller	• Turns signal to blade lift-down EPC solenoid circuit OFF. • Limits operation of engine and transmission.		
Problem that appears on machine	• Blade cannot be lifted down. • Once machine is stopped, engine speed is limited to medium (half). • Once machine is stopped, travel is limited to R1.		
Related information	• Output to blade lift-down EPC solenoid can be checked with monitoring function. (Code: 71003 Blade Down EPC (F/B)) • Method of reproducing failure code: Turn starting switch ON + Operate blade control lever (Lower).		

	Cause		Standard value in normal state/Remarks on troubleshooting			
Possible causes and standard value in normal state	1	Defective blade lift-down EPC solenoid (Internal short circuit)	★ Prepare with starting switch OFF, then carry out troubleshooting without turning starting switch ON.			
			WEP2 (male)	Resistance		
			Between (1) – (2)	4.5 – 14.5 Ω		
			Between (1) – chassis ground	Min. 1 MΩ		
	2	Ground fault in wiring harness (Contact with GND circuit)	★ Prepare with starting switch OFF, then carry out troubleshooting without turning starting switch ON.			
			Wiring harness between WEC3 (female) (16) – WEP2 (female) (1) and chassis ground	Resistance	Min. 1 MΩ	
	3	Defective work equipment controller	★ Prepare with starting switch OFF, then carry out troubleshooting without turning starting switch ON.			
			WEC3 (female)	Resistance		
			Between (16) – (13)	4.5 – 14.5 Ω		
			Between (16) – chassis ground	Min. 1 MΩ		

Circuit diagram related to blade lift-down EPC solenoid

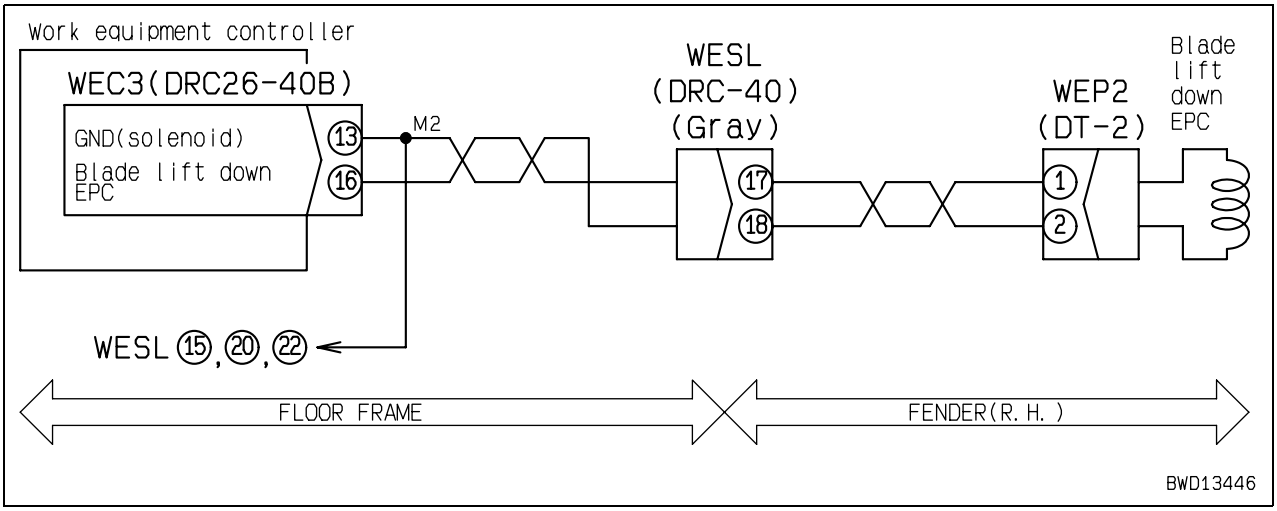

Failure code [DXHSKY] Blade down EPC: Short circuit

Action code	Failure code	Trouble	Blade down EPC: Short circuit (Work equipment controller system)
E03	**DXHSKY**		
Contents of trouble	• When signal was output to blade lift-down EPC solenoid circuit, abnormal current flowed.		
Action of controller	• Turns signal to blade lift-down EPC solenoid circuit OFF. • Limits operation of engine and transmission.		
Problem that appears on machine	• Blade cannot be lifted down. • Once machine is stopped, engine speed is limited to medium (half). • Once machine is stopped, travel is limited to R1.		
Related information	• Output to blade lift-down EPC solenoid can be checked with monitoring function. (Code: 71003 Blade Down EPC (F/B)) • Method of reproducing failure code: Turn starting switch ON + Operate blade control lever (Lower).		

	Cause		Standard value in normal state/Remarks on troubleshooting		
Possible causes and standard value in normal state	1	Defective blade lift-down EPC solenoid (Internal short circuit)	★ Prepare with starting switch OFF, then carry out troubleshooting without turning starting switch ON.		
			WEP2 (male)	Resistance	
			Between (1) – (2)	4.5 – 14.5 Ω	
			Between (1) – chassis ground	Min. 1 MΩ	
	2	Hot short (Short circuit with 24V circuit) in wiring harness	★ Prepare with starting switch OFF, then turn starting switch ON and carry out troubleshooting.		
			Wiring harness between WEC3 (female) (16) – WEP2 (female) (1) and chassis ground	Voltage	Max. 1 V
	3	Defective work equipment controller	★ Prepare with starting switch OFF, then carry out troubleshooting without turning starting switch ON.		
			WEC3 (female)	Resistance	
			Between (16) – (13)	4.5 – 14.5 Ω	
			Between (16) – chassis ground	Min. 1 MΩ	

Circuit diagram related to blade lift-down EPC solenoid

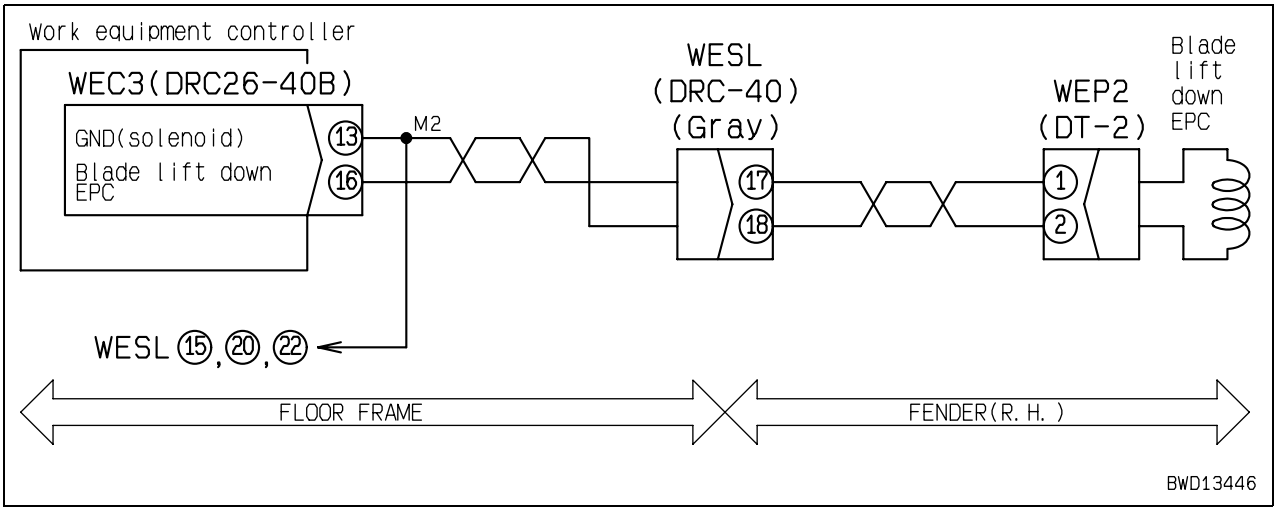

Failure code [DXHTKA] Blade left 1 EPC: Disconnection

Action code	Failure code	Trouble	Blade left 1 EPC: Disconnection (Work equipment controller system)
E03	**DXHTKA**		
Contents of trouble	• When signal is output to blade tilt right head EPC solenoid circuit, no current flows.		
Action of controller	• Turns signal to blade tilt right head EPC solenoid circuit OFF. • Limits operation of engine and transmission.		
Problem that appears on machine	• Blade tilt cylinder or pitch right cylinder cannot be retracted. • Once machine is stopped, engine speed is limited to medium (half). • Once machine is stopped, travel is limited to R1.		
Related information	• Output to blade tilt right head EPC solenoid can be checked with monitoring function. (Code: 90800 Blade Tilt RH-H EPC (F/B)) • Method of reproducing failure code: Turn starting switch ON + Operate blade control lever (Pitch back).		

	Cause		Standard value in normal state/Remarks on troubleshooting			
Possible causes and standard value in normal state	1	Defective blade tilt right head EPC solenoid (Internal disconnection)	★ Prepare with starting switch OFF, then carry out troubleshooting without turning starting switch ON.			
			WEP5 (male)	Resistance		
			Between (1) – (2)	2 – 12 Ω		
	2	Disconnection in wiring harness (Disconnection in wiring or defective contact in connector)	★ Prepare with starting switch OFF, then carry out troubleshooting without turning starting switch ON.			
			Wiring harness between WEC3 (female) (26) – WEP5 (female) (1)	Resistance	Max. 1 Ω	
			Wiring harness between WEC3 (female) (23) – WEP5 (female) (2)	Resistance	Max. 1 Ω	
	3	Defective work equipment controller	★ Prepare with starting switch OFF, then carry out troubleshooting without turning starting switch ON.			
			WEC3 (female)	Resistance		
			Between (26) – (23)	2 – 12 Ω		

Circuit diagram related to blade tilt right head EPC solenoid

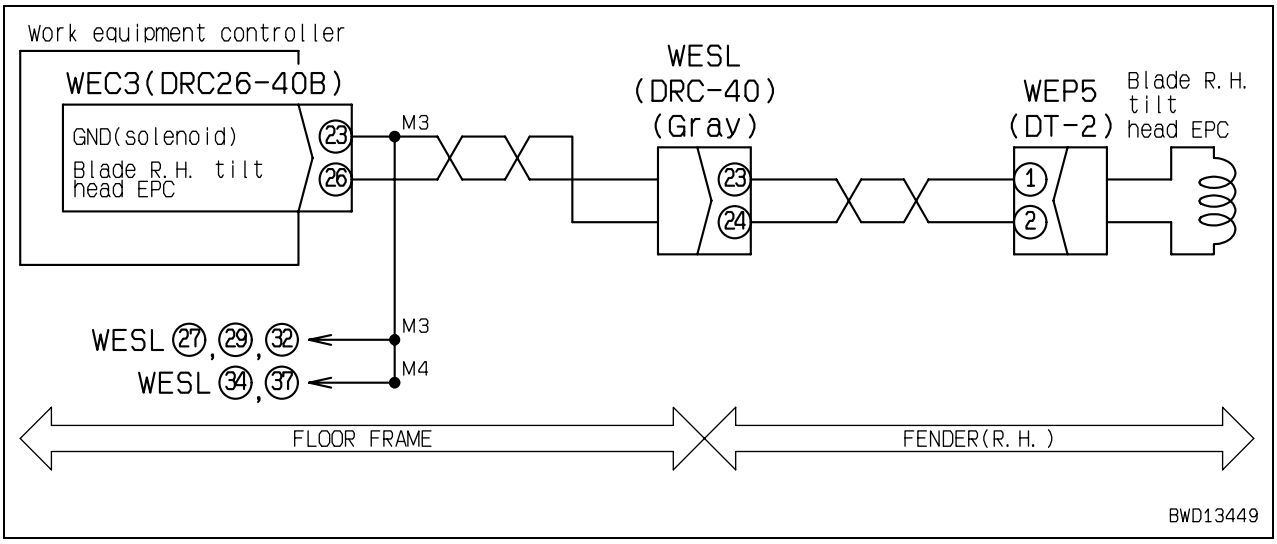

Failure code [DXHTKB] Blade left 1 EPC: Short circuit

Action code	Failure code	Trouble	Blade left 1 EPC: Short circuit (Work equipment controller system)
E03	**DXHTKB**		
Contents of trouble	• When signal was output to blade tilt right head EPC solenoid circuit, abnormal current flowed.		
Action of controller	• Turns signal to blade tilt right head EPC solenoid circuit OFF. • Limits operation of engine and transmission.		
Problem that appears on machine	• Blade tilt cylinder or pitch right cylinder cannot be retracted. • Once machine is stopped, engine speed is limited to medium (half). • Once machine is stopped, travel is limited to R1.		
Related information	• Output to blade tilt right head EPC solenoid can be checked with monitoring function. (Code: 90800 Blade Tilt RH-H EPC (F/B)) • Method of reproducing failure code: Turn starting switch ON + Operate blade control lever (Pitch back).		

	Cause		Standard value in normal state/Remarks on troubleshooting			
Possible causes and standard value in normal state	1	Defective blade tilt right head EPC solenoid (Internal short circuit)	★ Prepare with starting switch OFF, then carry out troubleshooting without turning starting switch ON.			
			WEP5 (male)	Resistance		
			Between (1) – (2)	2 – 12 Ω		
			Between (1) – chassis ground	Min. 1 MΩ		
	2	Ground fault in wiring harness (Contact with GND circuit)	★ Prepare with starting switch OFF, then carry out troubleshooting without turning starting switch ON.			
			Wiring harness between WEC3 (female) (26) – WEP5 (female) (1) and chassis ground	Resistance	Min. 1 MΩ	
	3	Defective work equipment controller	★ Prepare with starting switch OFF, then carry out troubleshooting without turning starting switch ON.			
			WEC3 (female)	Resistance		
			Between (26) – (23)	2 – 12 Ω		
			Between (26) – chassis ground	Min. 1 MΩ		

Circuit diagram related to blade tilt right head EPC solenoid

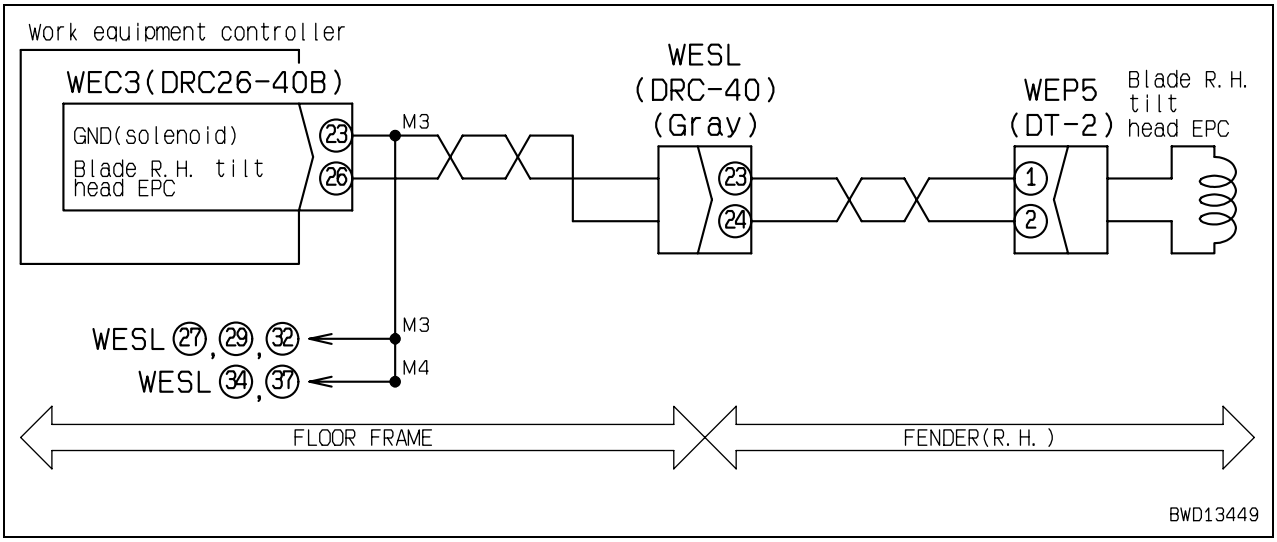

Failure code [DXHTKY] Blade left 1 EPC: Short circuit

Action code	Failure code	Trouble	Blade left 1 EPC: Short circuit (Work equipment controller system)
E03	**DXHTKY**		
Contents of trouble	• When signal was output to blade tilt right head EPC solenoid circuit, abnormal current flowed.		
Action of controller	• Turns signal to blade tilt right head EPC solenoid circuit OFF. • Limits operation of engine and transmission.		
Problem that appears on machine	• Blade tilt cylinder or pitch right cylinder cannot be retracted. • Once machine is stopped, engine speed is limited to medium (half). • Once machine is stopped, travel is limited to R1.		
Related information	• Output to blade tilt right head EPC solenoid can be checked with monitoring function. (Code: 90800 Blade Tilt RH-H EPC (F/B)) • Method of reproducing failure code: Turn starting switch ON + Operate blade control lever (Pitch back).		

	Cause		Standard value in normal state/Remarks on troubleshooting		
Possible causes and standard value in normal state	1	Defective blade tilt right head EPC solenoid (Internal short circuit)	★ Prepare with starting switch OFF, then carry out troubleshooting without turning starting switch ON.		
			WEP5 (male)	Resistance	
			Between (1) – (2)	2 – 12 Ω	
			Between (1) – chassis ground	Min. 1 MΩ	
	2	Hot short (Short circuit with 24V circuit) in wiring harness	★ Prepare with starting switch OFF, then turn starting switch ON and carry out troubleshooting.		
			Wiring harness between WEC3 (female) (26) – WEP5 (female) (1) and chassis ground	Voltage	Max. 1 V
	3	Defective work equipment controller	★ Prepare with starting switch OFF, then carry out troubleshooting without turning starting switch ON.		
			WEC3 (female)	Resistance	
			Between (26) – (23)	2 – 12 Ω	
			Between (26) – chassis ground	Min. 1 MΩ	

Circuit diagram related to blade tilt right head EPC solenoid

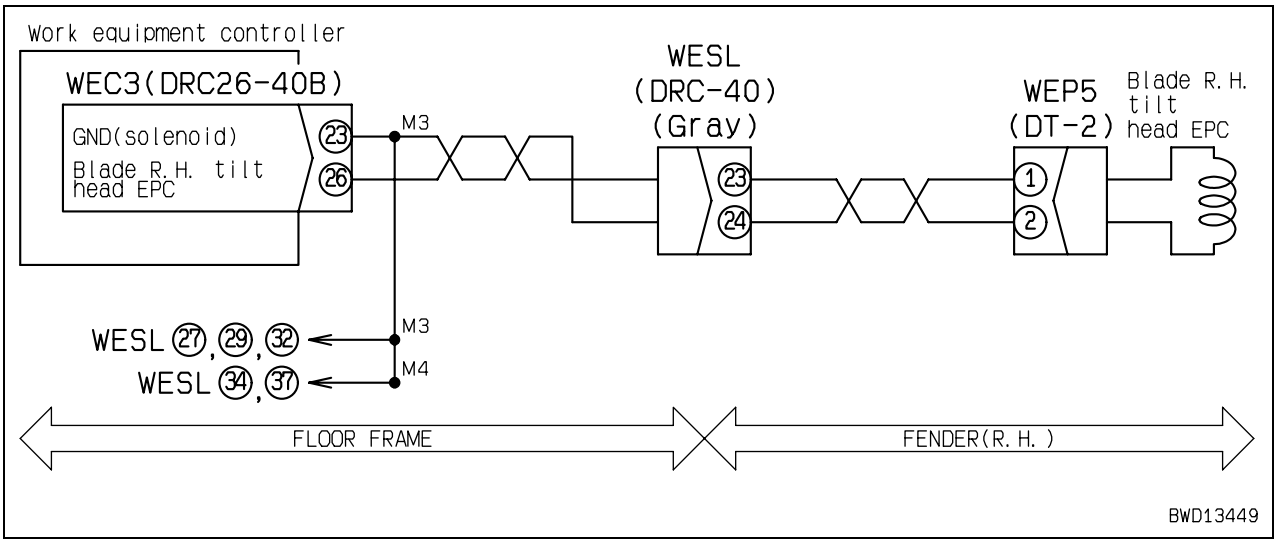

Failure code [DXHUKA] Blade right 1 EPC: Disconnection

Action code	Failure code	Trouble	Blade right 1 EPC: Disconnection (Work equipment controller system)
E03	**DXHUKA**		
Contents of trouble	• When signal is output to blade tilt right bottom EPC solenoid circuit, no current flows.		
Action of controller	• Turns signal to blade tilt right bottom EPC solenoid circuit OFF. • Limits operation of engine and transmission.		
Problem that appears on machine	• Blade tilt cylinder or pitch right cylinder cannot be retracted. • Once machine is stopped, engine speed is limited to medium (half). • Once machine is stopped, travel is limited to R1.		
Related information	• Output to blade tilt right bottom EPC solenoid can be checked with monitoring function. (Code: 90801 Blade Tilt RH-B EPC (F/B)) • Method of reproducing failure code: Turn starting switch ON + Operate blade control lever (Pitch forward).		

	Cause		Standard value in normal state/Remarks on troubleshooting			
Possible causes and standard value in normal state	1	Defective blade tilt right bottom EPC solenoid (Internal disconnection)	★ Prepare with starting switch OFF, then carry out troubleshooting without turning starting switch ON.			
			WEP6 (male)	Resistance		
			Between (1) – (2)	2 – 12 Ω		
	2	Disconnection in wiring harness (Disconnection in wiring or defective contact in connector)	★ Prepare with starting switch OFF, then carry out troubleshooting without turning starting switch ON.			
			Wiring harness between WEC3 (female) (36) – WEP6 (female) (1)	Resistance	Max. 1 Ω	
			Wiring harness between WEC3 (female) (23) – WEP6 (female) (2)	Resistance	Max. 1 Ω	
	3	Defective work equipment controller	★ Prepare with starting switch OFF, then carry out troubleshooting without turning starting switch ON.			
			WEC3 (female)	Resistance		
			Between (36) – (23)	2 – 12 Ω		

Circuit diagram related to blade tilt right bottom EPC solenoid

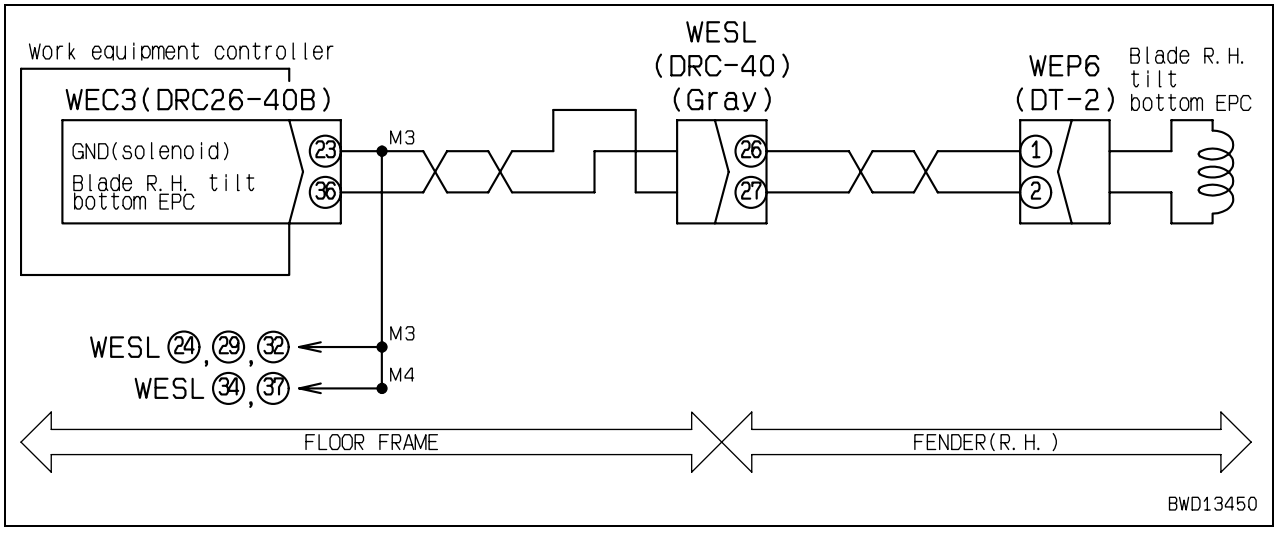

Failure code [DXHUKB] Blade right 1 EPC: Short circuit

Action code	Failure code	Trouble	Blade right 1 EPC: Short circuit (Work equipment controller system)
E03	**DXHUKB**		
Contents of trouble	• When signal was output to blade tilt right bottom EPC solenoid circuit, abnormal current flowed.		
Action of controller	• Turns signal to blade tilt right bottom EPC solenoid circuit OFF. • Limits operation of engine and transmission.		
Problem that appears on machine	• Blade tilt cylinder or pitch right cylinder cannot be retracted. • Once machine is stopped, engine speed is limited to medium (half). • Once machine is stopped, travel is limited to R1.		
Related information	• Output to blade tilt right bottom EPC solenoid can be checked with monitoring function. (Code: 90801 Blade Tilt RH-B EPC (F/B)) • Method of reproducing failure code: Turn starting switch ON + Operate blade control lever (Pitch forward).		

	Cause		Standard value in normal state/Remarks on troubleshooting			
Possible causes and standard value in normal state	1	Defective blade tilt right bottom EPC solenoid (Internal short circuit)	★ Prepare with starting switch OFF, then carry out troubleshooting without turning starting switch ON.			
			WEP6 (male)	Resistance		
			Between (1) – (2)	2 – 12 Ω		
			Between (1) – chassis ground	Min. 1 MΩ		
	2	Ground fault in wiring harness (Contact with GND circuit)	★ Prepare with starting switch OFF, then carry out troubleshooting without turning starting switch ON.			
			Wiring harness between WEC3 (female) (36) – WEP6 (female) (1) and chassis ground	Resistance	Min. 1 MΩ	
	3	Defective work equipment controller	★ Prepare with starting switch OFF, then carry out troubleshooting without turning starting switch ON.			
			WEC3 (female)	Resistance		
			Between (36) – (23)	2 – 12 Ω		
			Between (36) – chassis ground	Min. 1 MΩ		

Circuit diagram related to blade tilt right bottom EPC solenoid

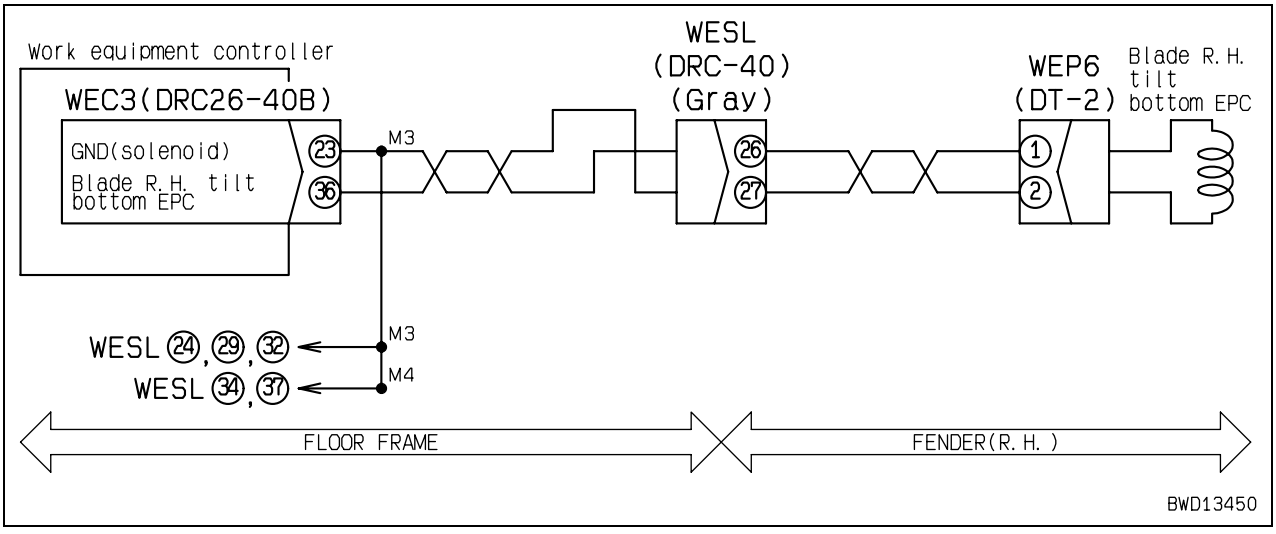

Failure code [DXHUKY] Blade right 1 EPC: Short circuit

Action code	Failure code	Trouble	Blade right 1 EPC: Short circuit (Work equipment controller system)
E03	**DXHUKY**		
Contents of trouble	• When signal was output to blade tilt right bottom EPC solenoid circuit, abnormal current flowed.		
Action of controller	• Turns signal to blade tilt right bottom EPC solenoid circuit OFF. • Limits operation of engine and transmission.		
Problem that appears on machine	• Blade tilt cylinder or pitch right cylinder cannot be retracted. • Once machine is stopped, engine speed is limited to medium (half). • Once machine is stopped, travel is limited to R1.		
Related information	• Output to blade tilt right bottom EPC solenoid can be checked with monitoring function. (Code: 90801 Blade Tilt RH-B EPC (F/B)) • Method of reproducing failure code: Turn starting switch ON + Operate blade control lever (Pitch forward).		

	Cause		Standard value in normal state/Remarks on troubleshooting			
Possible causes and standard value in normal state	1	Defective blade tilt right bottom EPC solenoid (Internal short circuit)	★ Prepare with starting switch OFF, then carry out troubleshooting without turning starting switch ON.			
			WEP6 (male)	Resistance		
			Between (1) – (2)	2 – 12 Ω		
			Between (1) – chassis ground	Min. 1 MΩ		
	2	Hot short (Short circuit with 24V circuit) in wiring harness	★ Prepare with starting switch OFF, then turn starting switch ON and carry out troubleshooting.			
			Wiring harness between WEC3 (female) (36) – WEP6 (female) (1) and chassis ground		Voltage	Max. 1 V
	3	Defective work equipment controller	★ Prepare with starting switch OFF, then carry out troubleshooting without turning starting switch ON.			
			WEC3 (female)	Resistance		
			Between (36) – (23)	2 – 12 Ω		
			Between (36) – chassis ground	Min. 1 MΩ		

Circuit diagram related to blade tilt right bottom EPC solenoid

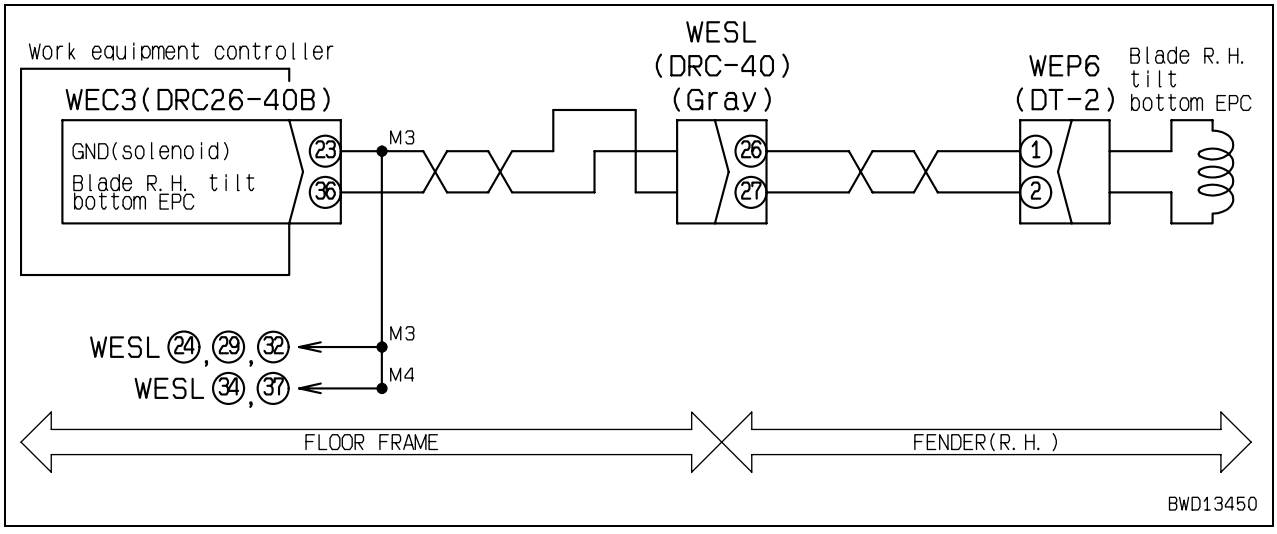

Failure code [DXHWKA] Ripper up EPC: Disconnection

Action code	Failure code	Trouble	Ripper up EPC: Disconnection (Work equipment controller system)
E03	**DXHWKA**		
Contents of trouble	• When signal is output to ripper lift-up EPC solenoid circuit, no current flows.		
Action of controller	• Turns signal to ripper lift-up EPC solenoid circuit OFF. • Limits operation of engine and transmission.		
Problem that appears on machine	• Ripper cannot be lifted up. • Once machine is stopped, engine speed is limited to medium (half). • Once machine is stopped, travel is limited to R1.		
Related information	• Output to ripper lift-up EPC solenoid can be checked with monitoring function. (Code: 71101 Ripper Raise EPC (F/B)) • Method of reproducing failure code: Turn starting switch ON + Operate ripper control lever (Raise).		

	Cause		Standard value in normal state/Remarks on troubleshooting		
Possible causes and standard value in normal state	1	Defective ripper lift-up EPC solenoid (Internal disconnection)	★ Prepare with starting switch OFF, then carry out troubleshooting without turning starting switch ON.		
			WEP7 (male)	Resistance	
			Between (1) – (2)	2 – 12 Ω	
	2	Disconnection in wiring harness (Disconnection in wiring or defective contact in connector)	★ Prepare with starting switch OFF, then carry out troubleshooting without turning starting switch ON.		
			Wiring harness between WEC3 (female) (5) – WEP7 (female) (1)	Resistance	Max. 1 Ω
			Wiring harness between WEC3 (female) (23) – WEP7 (female) (2)	Resistance	Max. 1 Ω
	3	Defective work equipment controller	★ Prepare with starting switch OFF, then carry out troubleshooting without turning starting switch ON.		
			WEC3 (female)	Resistance	
			Between (5) – (23)	2 – 12 Ω	

Circuit diagram related to ripper lift-up EPC solenoid

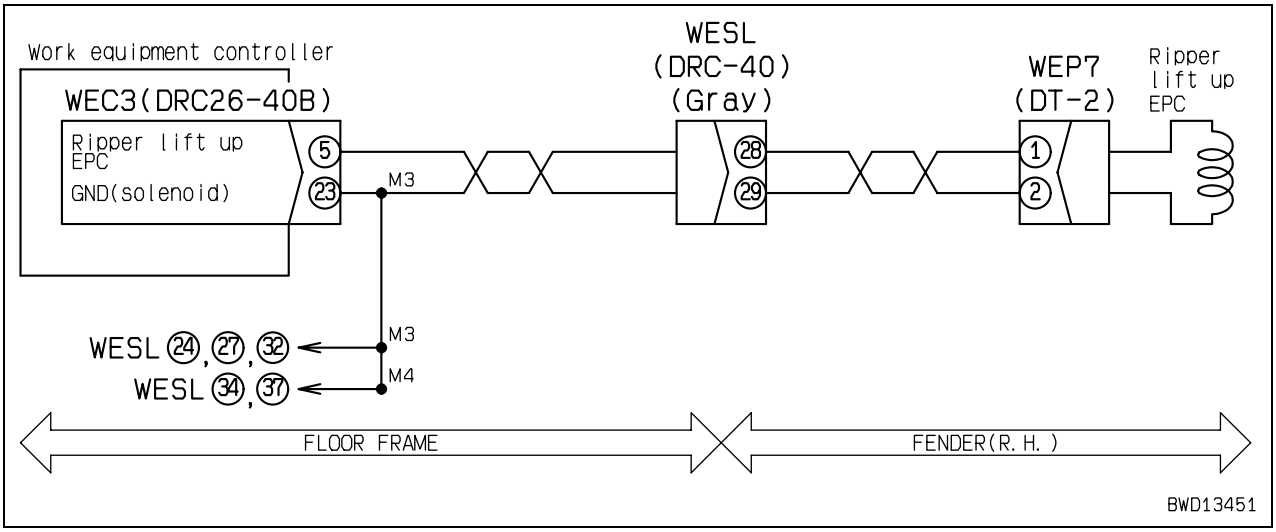

Failure code [DXHWKB] Ripper up EPC: Short circuit

Action code	Failure code	Trouble	Ripper up EPC: Short circuit (Work equipment controller system)
E03	**DXHWKB**		
Contents of trouble	• When signal was output to ripper lift-up EPC solenoid circuit, abnormal current flowed.		
Action of controller	• Turns signal to ripper lift-up EPC solenoid circuit OFF. • Limits operation of engine and transmission.		
Problem that appears on machine	• Ripper cannot be lifted up. • Once machine is stopped, engine speed is limited to medium (half). • Once machine is stopped, travel is limited to R1.		
Related information	• Output to ripper lift-up EPC solenoid can be checked with monitoring function. (Code: 71101 Ripper Raise EPC (F/B)) • Method of reproducing failure code: Turn starting switch ON + Operate ripper control lever (Raise).		

	Cause		Standard value in normal state/Remarks on troubleshooting		
Possible causes and standard value in normal state	1	Defective ripper lift-up EPC solenoid (Internal short circuit)	★ Prepare with starting switch OFF, then carry out troubleshooting without turning starting switch ON.		
			WEP7 (male)	Resistance	
			Between (1) – (2)	2 – 12 Ω	
			Between (1) – chassis ground	Min. 1 MΩ	
	2	Ground fault in wiring harness (Contact with GND circuit)	★ Prepare with starting switch OFF, then carry out troubleshooting without turning starting switch ON.		
			Wiring harness between WEC3 (female) (5) – WEP7 (female) (1) and chassis ground	Resistance	Min. 1 MΩ
	3	Defective work equipment controller	★ Prepare with starting switch OFF, then carry out troubleshooting without turning starting switch ON.		
			WEC3 (female)	Resistance	
			Between (5) – (23)	2 – 12 Ω	
			Between (5) – chassis ground	Min. 1 MΩ	

Circuit diagram related to ripper lift-up EPC solenoid

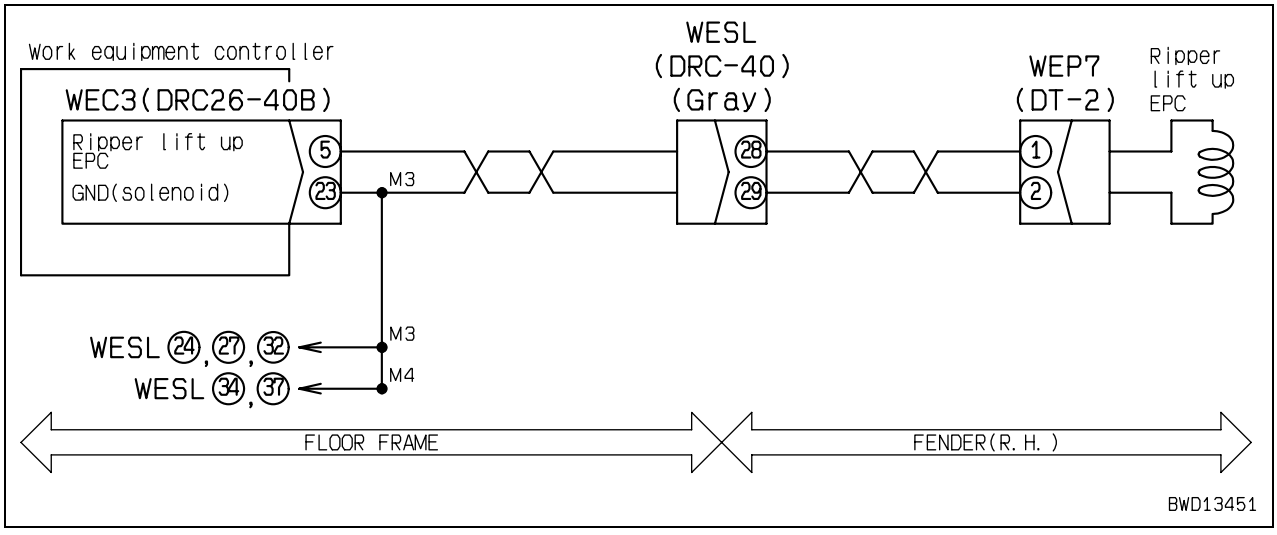

Failure code [DXHWKY] Ripper up EPC: Short circuit

Action code	Failure code	Trouble	Ripper up EPC: Short circuit (Work equipment controller system)
E03	**DXHWKY**		
Contents of trouble	• When signal was output to ripper lift-up EPC solenoid circuit, abnormal current flowed.		
Action of controller	• Turns signal to ripper lift-up EPC solenoid circuit OFF. • Limits operation of engine and transmission.		
Problem that appears on machine	• Ripper cannot be lifted up. • Once machine is stopped, engine speed is limited to medium (half). • Once machine is stopped, travel is limited to R1.		
Related information	• Output to ripper lift-up EPC solenoid can be checked with monitoring function. (Code: 71101 Ripper Raise EPC (F/B)) • Method of reproducing failure code: Turn starting switch ON + Operate ripper control lever (Raise).		

	Cause		Standard value in normal state/Remarks on troubleshooting		
Possible causes and standard value in normal state	1	Defective ripper lift-up EPC solenoid (Internal short circuit)	★ Prepare with starting switch OFF, then carry out troubleshooting without turning starting switch ON.		
			WEP7 (male)	Resistance	
			Between (1) – (2)	2 – 12 Ω	
			Between (1) – chassis ground	Min. 1 MΩ	
	2	Hot short (Short circuit with 24V circuit) in wiring harness	★ Prepare with starting switch OFF, then turn starting switch ON and carry out troubleshooting.		
			Wiring harness between WEC3 (female) (5) – WEP7 (female) (1) and chassis ground	Voltage	Max. 1 V
	3	Defective work equipment controller	★ Prepare with starting switch OFF, then carry out troubleshooting without turning starting switch ON.		
			WEC3 (female)	Resistance	
			Between (5) – (23)	2 – 12 Ω	
			Between (5) – chassis ground	Min. 1 MΩ	

Circuit diagram related to ripper lift-up EPC solenoid

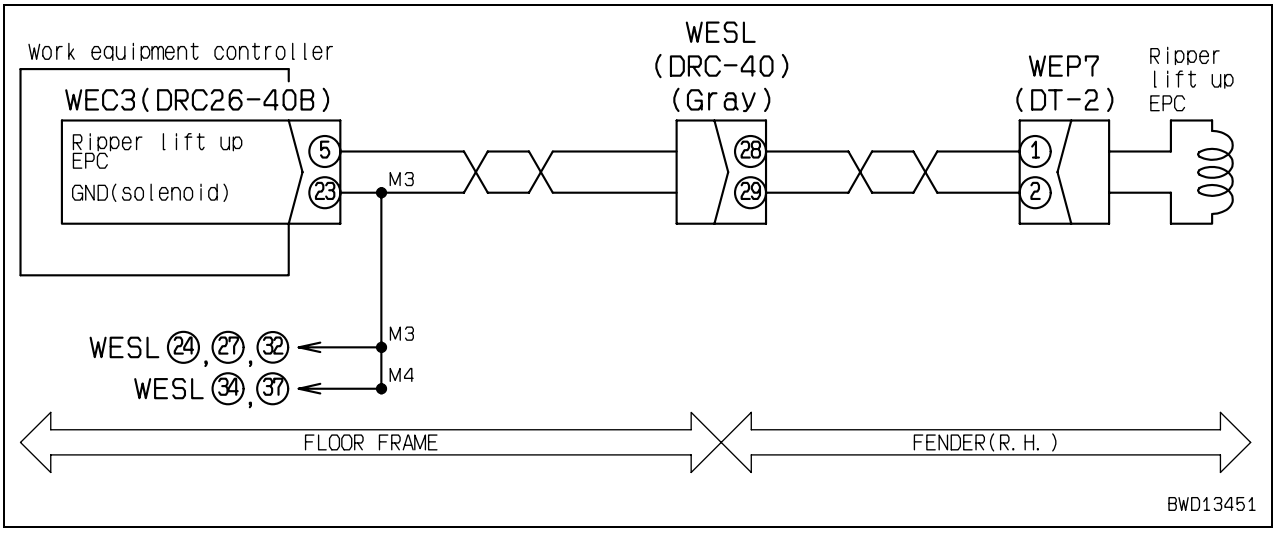

Failure code [DXHXKA] Ripper down EPC: Disconnection

Action code	Failure code	Trouble	Ripper down EPC: Disconnection (Work equipment controller system)
E03	**DXHXKA**		
Contents of trouble	• When signal is output to ripper lift-down EPC solenoid circuit, no current flows.		
Action of controller	• Turns signal to ripper lift-down EPC solenoid circuit OFF. • Limits operation of engine and transmission.		
Problem that appears on machine	• Ripper cannot be lifted down. • Once machine is stopped, engine speed is limited to medium (half). • Once machine is stopped, travel is limited to R1.		
Related information	• Output to ripper lift-down EPC solenoid can be checked with monitoring function. (Code: 71103 Ripper Down EPC (F/B)) • Method of reproducing failure code: Turn starting switch ON + Operate ripper control lever (Lower).		

	Cause		Standard value in normal state/Remarks on troubleshooting			
Possible causes and standard value in normal state	1	Defective ripper lift-down EPC solenoid (Internal disconnection)	★ Prepare with starting switch OFF, then carry out troubleshooting without turning starting switch ON.			
			WEP8 (male)	Resistance		
			Between (1) – (2)	2 – 12 Ω		
	2	Disconnection in wiring harness (Disconnection in wiring or defective contact in connector)	★ Prepare with starting switch OFF, then carry out troubleshooting without turning starting switch ON.			
			Wiring harness between WEC3 (female) (15) – WEP8 (female) (1)	Resistance	Max. 1 Ω	
			Wiring harness between WEC3 (female) (23) – WEP8 (female) (2)	Resistance	Max. 1 Ω	
	3	Defective work equipment controller	★ Prepare with starting switch OFF, then carry out troubleshooting without turning starting switch ON.			
			WEC3 (female)	Resistance		
			Between (15) – (23)	2 – 12 Ω		

Circuit diagram related to ripper lift-down EPC solenoid

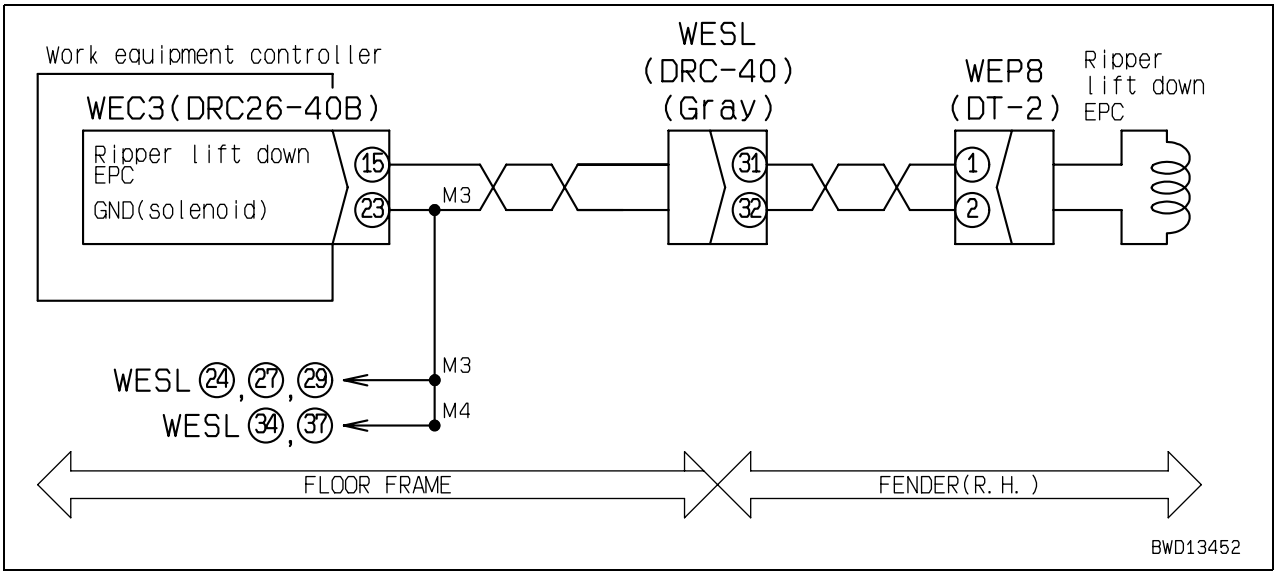

Failure code [DXHXKB] Ripper down EPC: Short circuit

Action code	Failure code	Trouble	Ripper down EPC: Short circuit (Work equipment controller system)
E03	**DXHXKB**		
Contents of trouble	• When signal was output to ripper lift-down EPC solenoid circuit, abnormal current flowed.		
Action of controller	• Turns signal to ripper lift-down EPC solenoid circuit OFF. • Limits operation of engine and transmission.		
Problem that appears on machine	• Ripper cannot be lifted down. • Once machine is stopped, engine speed is limited to medium (half). • Once machine is stopped, travel is limited to R1.		
Related information	• Output to ripper lift-down EPC solenoid can be checked with monitoring function. (Code: 71103 Ripper Down EPC (F/B)) • Method of reproducing failure code: Turn starting switch ON + Operate ripper control lever (Lower).		

	Cause		Standard value in normal state/Remarks on troubleshooting			
Possible causes and standard value in normal state	1	Defective ripper lift-down EPC solenoid (Internal short circuit)	★ Prepare with starting switch OFF, then carry out troubleshooting without turning starting switch ON.			
			WEP8 (male)	Resistance		
			Between (1) – (2)	2 – 12 Ω		
			Between (1) – chassis ground	Min. 1 MΩ		
	2	Ground fault in wiring harness (Contact with GND circuit)	★ Prepare with starting switch OFF, then carry out troubleshooting without turning starting switch ON.			
			Wiring harness between WEC3 (female) (15) – WEP8 (female) (1) and chassis ground	Resistance	Min. 1 MΩ	
	3	Defective work equipment controller	★ Prepare with starting switch OFF, then carry out troubleshooting without turning starting switch ON.			
			WEC3 (female)	Resistance		
			Between (15) – (23)	2 – 12 Ω		
			Between (15) – chassis ground	Min. 1 MΩ		

Circuit diagram related to ripper lift-down EPC solenoid

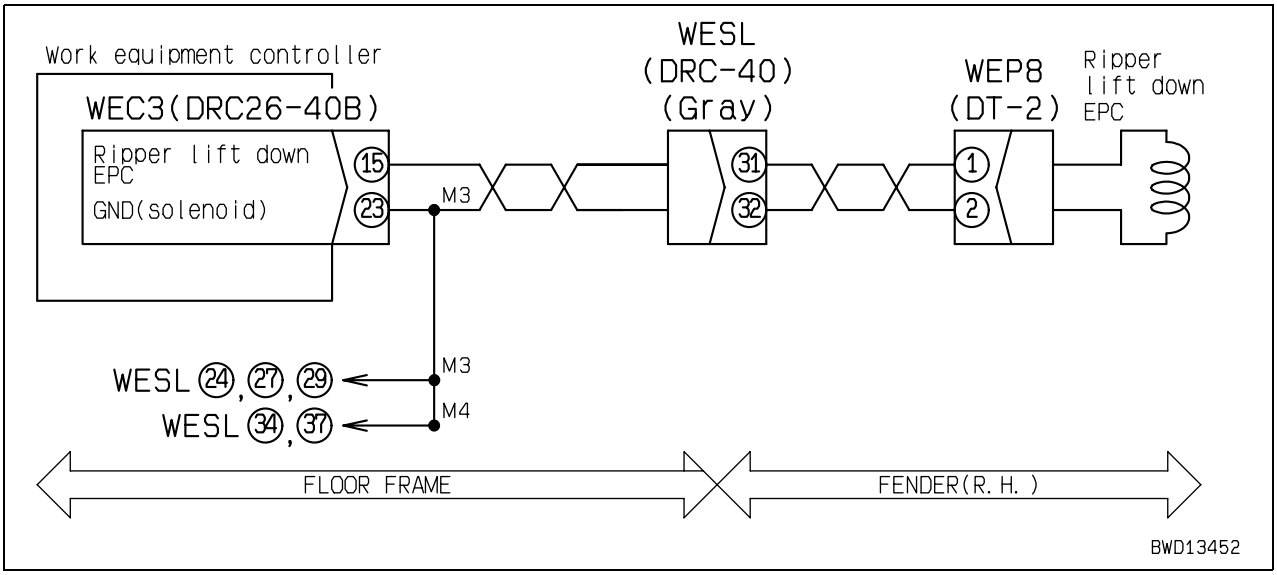

Failure code [DXHXKY] Ripper down EPC: Short circuit

Action code	Failure code	Trouble	Ripper down EPC: Short circuit (Work equipment controller system)
E03	**DXHXKY**		
Contents of trouble	• When signal was output to ripper lift-down EPC solenoid circuit, abnormal current flowed.		
Action of controller	• Turns signal to ripper lift-down EPC solenoid circuit OFF. • Limits operation of engine and transmission.		
Problem that appears on machine	• Ripper cannot be lifted down. • Once machine is stopped, engine speed is limited to medium (half). • Once machine is stopped, travel is limited to R1.		
Related information	• Output to ripper lift-down EPC solenoid can be checked with monitoring function. (Code: 71103 Ripper Down EPC (F/B)) • Method of reproducing failure code: Turn starting switch ON + Operate ripper control lever (Lower).		

	Cause		Standard value in normal state/Remarks on troubleshooting		
Possible causes and standard value in normal state	1	Defective ripper lift-down EPC solenoid (Internal short circuit)	★ Prepare with starting switch OFF, then carry out troubleshooting without turning starting switch ON.		
			WEP8 (male)	Resistance	
			Between (1) – (2)	2 – 12 Ω	
			Between (1) – chassis ground	Min. 1 MΩ	
	2	Hot short (Short circuit with 24V circuit) in wiring harness	★ Prepare with starting switch OFF, then turn starting switch ON and carry out troubleshooting.		
			Wiring harness between WEC3 (female) (15) – WEP8 (female) (1) and chassis ground	Voltage	Max. 1 V
	3	Defective work equipment controller	★ Prepare with starting switch OFF, then carry out troubleshooting without turning starting switch ON.		
			WEC3 (female)	Resistance	
			Between (15) – (23)	2 – 12 Ω	
			Between (15) – chassis ground	Min. 1 MΩ	

Circuit diagram related to ripper lift-down EPC solenoid

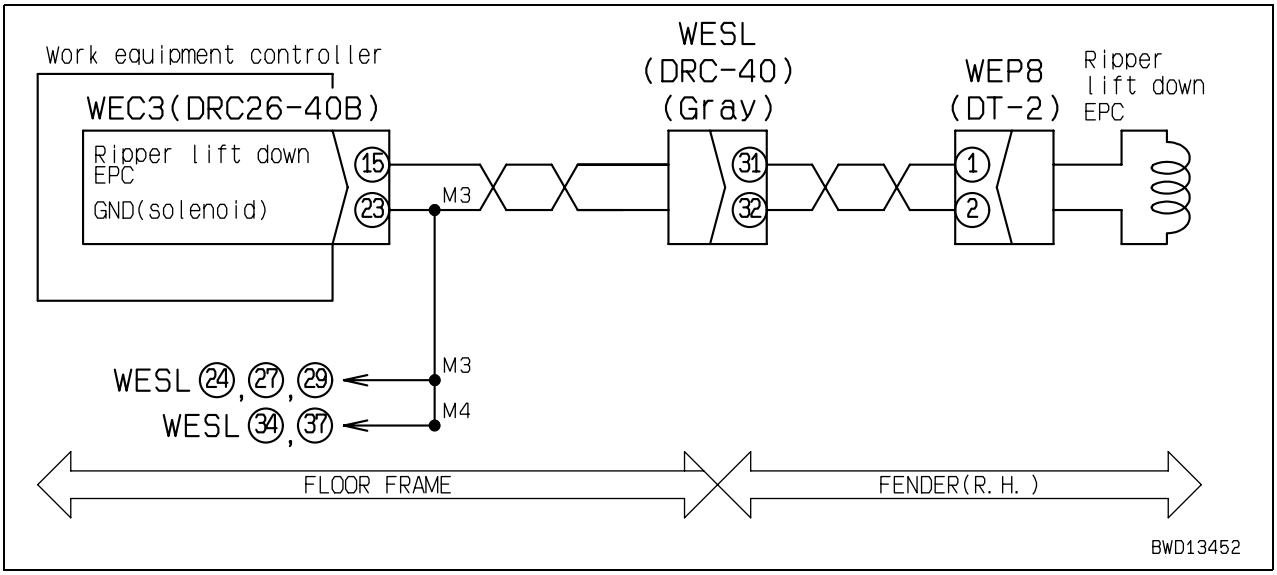

Failure code [DXHYKA] Ripper Tilt In EPC: Disconnection

Action code	Failure code	Trouble	Ripper Tilt In EPC: Disconnection (Work equipment controller system)
E03	**DXHYKA**		
Contents of trouble	• When signal is output to ripper tilt-in EPC solenoid circuit, no current flows.		
Action of controller	• Turns signal to ripper tilt-in EPC solenoid circuit OFF. • Limits operation of engine and transmission.		
Problem that appears on machine	• Ripper cannot be tilted in. • Once machine is stopped, engine speed is limited to medium (half). • Once machine is stopped, travel is limited to R1.		
Related information	• Output to ripper tilt-in EPC solenoid can be checked with monitoring function. (Code: 71105 Ripper Tilt In EPC (F/B)) • Method of reproducing failure code: Turn starting switch ON + Operate ripper control lever (Tilt in).		

	Cause		Standard value in normal state/Remarks on troubleshooting		
Possible causes and standard value in normal state	1	Defective ripper tilt-in EPC solenoid (Internal disconnection)	★ Prepare with starting switch OFF, then carry out troubleshooting without turning starting switch ON.		
			WEP9 (male)	Resistance	
			Between (1) – (2)	2 – 12 Ω	
	2	Disconnection in wiring harness (Disconnection in wiring or defective contact in connector)	★ Prepare with starting switch OFF, then carry out troubleshooting without turning starting switch ON.		
			Wiring harness between WEC3 (female) (25) – WEP9 (female) (1)	Resistance	Max. 1 Ω
			Wiring harness between WEC3 (female) (23) – WEP9 (female) (2)	Resistance	Max. 1 Ω
	3	Defective work equipment controller	★ Prepare with starting switch OFF, then carry out troubleshooting without turning starting switch ON.		
			WEC3 (female)	Resistance	
			Between (25) – (23)	2 – 12 Ω	

Circuit diagram related to ripper tilt-in EPC solenoid

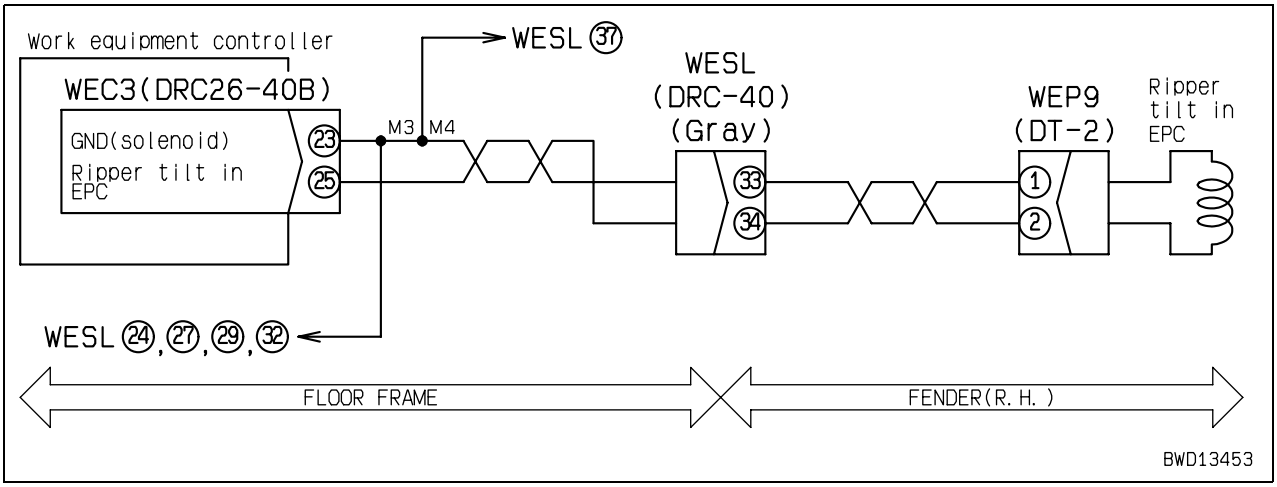

Failure code [DXHYKB] Ripper Tilt In EPC: Short circuit

Action code	Failure code	Trouble	Ripper Tilt In EPC: Short circuit (Work equipment controller system)
E03	**DXHYKB**		
Contents of trouble	• When signal was output to ripper tilt-in EPC solenoid circuit, abnormal current flowed.		
Action of controller	• Turns signal to ripper tilt-in EPC solenoid circuit OFF. • Limits operation of engine and transmission.		
Problem that appears on machine	• Ripper cannot be tilted in. • Once machine is stopped, engine speed is limited to medium (half). • Once machine is stopped, travel is limited to R1.		
Related information	• Output to ripper tilt-in EPC solenoid can be checked with monitoring function. (Code: 71105 Ripper Tilt In EPC (F/B)) • Method of reproducing failure code: Turn starting switch ON + Operate ripper control lever (Tilt in).		

	Cause		Standard value in normal state/Remarks on troubleshooting			
Possible causes and standard value in normal state	1	Defective ripper tilt-in EPC solenoid (Internal short circuit)	★ Prepare with starting switch OFF, then carry out troubleshooting without turning starting switch ON.			
			WEP9 (male)	Resistance		
			Between (1) – (2)	2 – 12 Ω		
			Between (1) – chassis ground	Min. 1 MΩ		
	2	Ground fault in wiring harness (Contact with GND circuit)	★ Prepare with starting switch OFF, then carry out troubleshooting without turning starting switch ON.			
			Wiring harness between WEC3 (female) (25) – WEP9 (female) (1) and chassis ground	Resistance	Min. 1 MΩ	
	3	Defective work equipment controller	★ Prepare with starting switch OFF, then carry out troubleshooting without turning starting switch ON.			
			WEC3 (female)	Resistance		
			Between (25) – (23)	2 – 12 Ω		
			Between (25) – chassis ground	Min. 1 MΩ		

Circuit diagram related to ripper tilt-in EPC solenoid

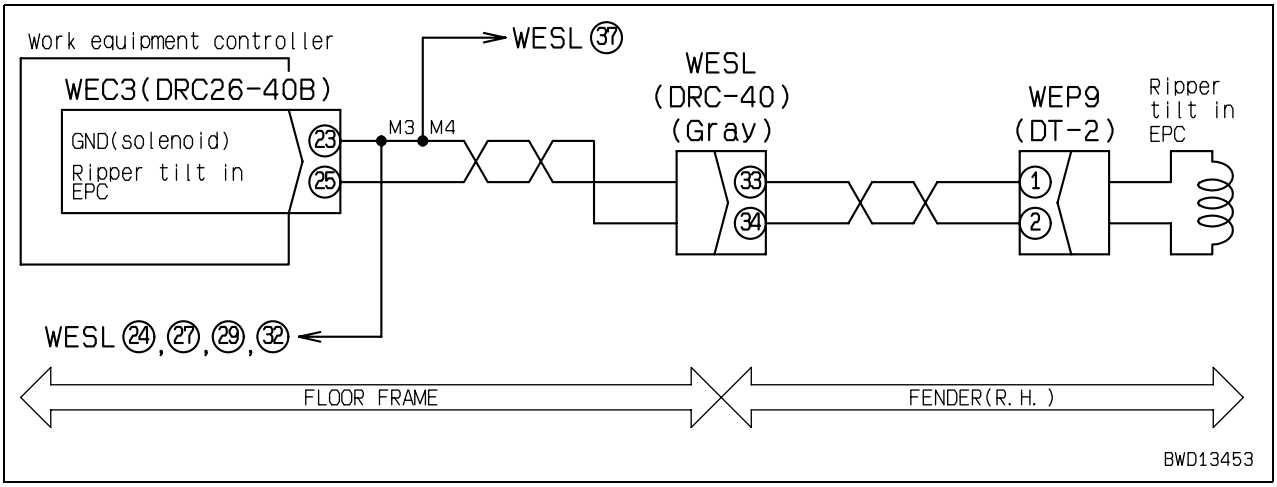

Failure code [DXHYKY] Ripper Tilt In EPC: Short circuit

Action code	Failure code	Trouble	Ripper Tilt In EPC: Short circuit (Work equipment controller system)
E03	**DXHYKY**		
Contents of trouble	• When signal was output to ripper tilt-in EPC solenoid circuit, abnormal current flowed.		
Action of controller	• Turns signal to ripper tilt-in EPC solenoid circuit OFF. • Limits operation of engine and transmission.		
Problem that appears on machine	• Ripper cannot be tilted in. • Once machine is stopped, engine speed is limited to medium (half). • Once machine is stopped, travel is limited to R1.		
Related information	• Output to ripper tilt-in EPC solenoid can be checked with monitoring function. (Code: 71105 Ripper Tilt In EPC (F/B)) • Method of reproducing failure code: Turn starting switch ON + Operate ripper control lever (Tilt in).		

	Cause		Standard value in normal state/Remarks on troubleshooting		
Possible causes and standard value in normal state	1	Defective ripper tilt-in EPC solenoid (Internal short circuit)	★ Prepare with starting switch OFF, then carry out troubleshooting without turning starting switch ON.		
			WEP9 (male)	Resistance	
			Between (1) – (2)	2 – 12 Ω	
			Between (1) – chassis ground	Min. 1 MΩ	
	2	Hot short (Short circuit with 24V circuit) in wiring harness	★ Prepare with starting switch OFF, then turn starting switch ON and carry out troubleshooting.		
			Wiring harness between WEC3 (female) (25) – WEP9 (female) (1) and chassis ground	Voltage	Max. 1 V
	3	Defective work equipment controller	★ Prepare with starting switch OFF, then carry out troubleshooting without turning starting switch ON.		
			WEC3 (female)	Resistance	
			Between (25) – (23)	2 – 12 Ω	
			Between (25) – chassis ground	Min. 1 MΩ	

Circuit diagram related to ripper tilt-in EPC solenoid

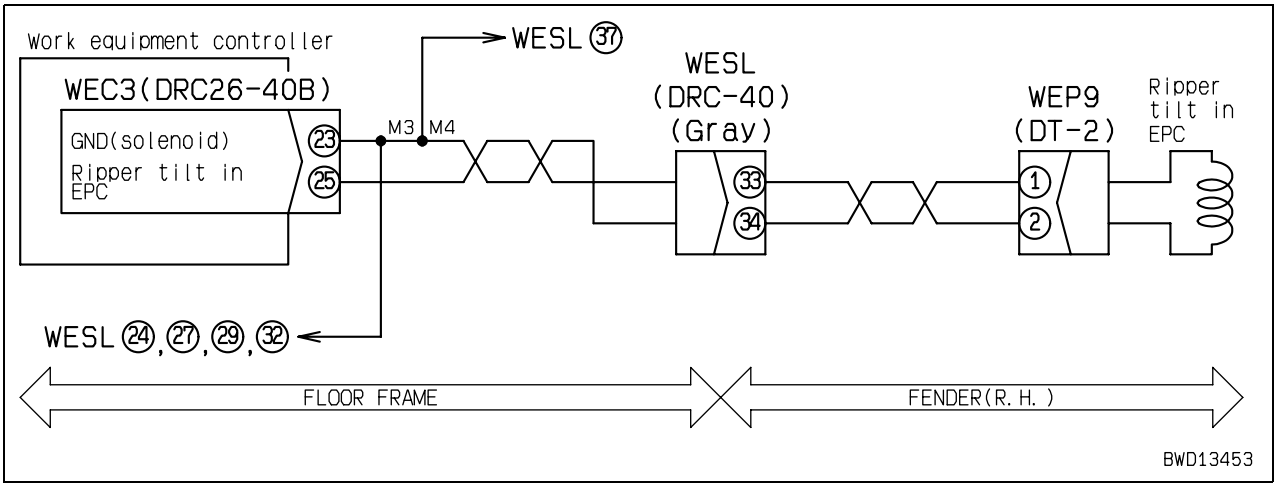

Failure code [DXHZKA] Ripper Tilt Back EPC: Disconnection

Action code	Failure code	Trouble	Ripper Tilt Back EPC: Disconnection (Work equipment controller system)
E03	**DXHZKA**		
Contents of trouble	• When signal is output to ripper tilt-back EPC solenoid circuit, no current flows.		
Action of controller	• Turns signal to ripper tilt-back EPC solenoid circuit OFF. • Limits operation of engine and transmission.		
Problem that appears on machine	• Ripper cannot be tilted back. • Once machine is stopped, engine speed is limited to medium (half). • Once machine is stopped, travel is limited to R1.		
Related information	• Output to ripper tilt-back EPC solenoid can be checked with monitoring function. (Code: 71107 Ripper Tilt Back EPC (F/B)) • Method of reproducing failure code: Turn starting switch ON + Operate ripper control lever (Tilt back).		

	Cause		Standard value in normal state/Remarks on troubleshooting			
Possible causes and standard value in normal state	1	Defective ripper tilt-back EPC solenoid (Internal disconnection)	★ Prepare with starting switch OFF, then carry out troubleshooting without turning starting switch ON.			
			WEPA (male)	Resistance		
			Between (1) – (2)	2 – 12 Ω		
	2	Disconnection in wiring harness (Disconnection in wiring or defective contact in connector)	★ Prepare with starting switch OFF, then carry out troubleshooting without turning starting switch ON.			
			Wiring harness between WEC3 (female) (35) – WEPA (female) (1)	Resistance	Max. 1 Ω	
			Wiring harness between WEC3 (female) (23) – WEPA (female) (2)	Resistance	Max. 1 Ω	
	3	Defective work equipment controller	★ Prepare with starting switch OFF, then carry out troubleshooting without turning starting switch ON.			
			WEC3 (female)	Resistance		
			Between (35) – (23)	2 – 12 Ω		

Circuit diagram related to ripper tilt-back EPC solenoid

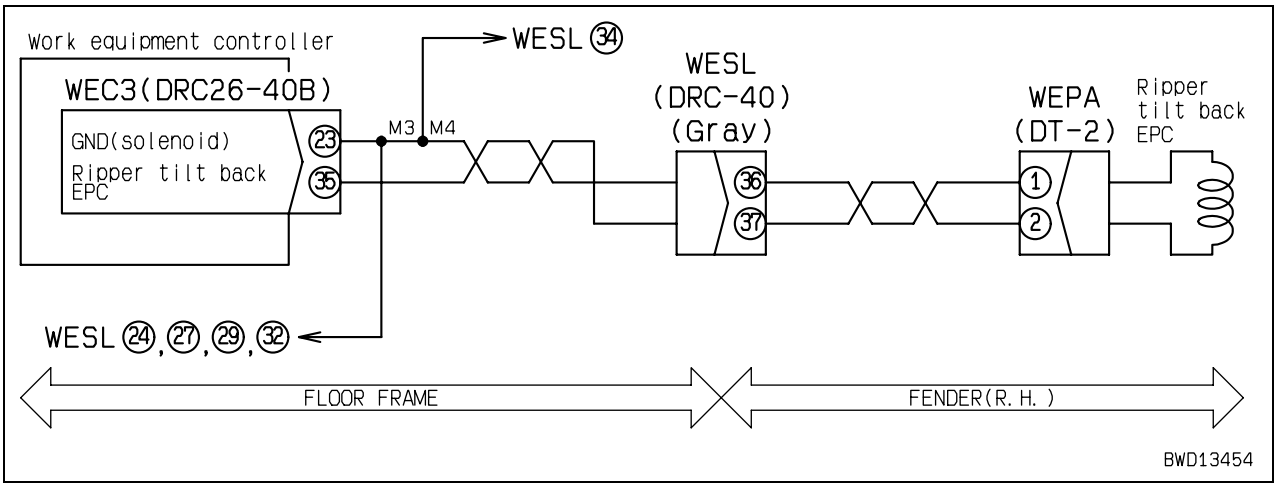

Failure code [DXHZKB] Ripper Tilt Back EPC: Short circuit

Action code	Failure code	Trouble	Ripper Tilt Back EPC: Short circuit (Work equipment controller system)
E03	**DXHZKB**		
Contents of trouble	• When signal was output to ripper tilt-back EPC solenoid circuit, abnormal current flowed.		
Action of controller	• Turns signal to ripper tilt-back EPC solenoid circuit OFF. • Limits operation of engine and transmission.		
Problem that appears on machine	• Ripper cannot be tilted back. • Once machine is stopped, engine speed is limited to medium (half). • Once machine is stopped, travel is limited to R1.		
Related information	• Output to ripper tilt-back EPC solenoid can be checked with monitoring function. (Code: 71107 Ripper Tilt Back EPC (F/B)) • Method of reproducing failure code: Turn starting switch ON + Operate ripper control lever (Tilt back).		

	Cause		Standard value in normal state/Remarks on troubleshooting			
Possible causes and standard value in normal state	1	Defective ripper tilt-back EPC solenoid (Internal short circuit)	★ Prepare with starting switch OFF, then carry out troubleshooting without turning starting switch ON.			
			WEPA (male)	Resistance		
			Between (1) – (2)	2 – 12 Ω		
			Between (1) – chassis ground	Min. 1 MΩ		
	2	Ground fault in wiring harness (Contact with GND circuit)	★ Prepare with starting switch OFF, then carry out troubleshooting without turning starting switch ON.			
			Wiring harness between WEC3 (female) (35) – WEPA (female) (1) and chassis ground	Resistance	Min. 1 MΩ	
	3	Defective work equipment controller	★ Prepare with starting switch OFF, then carry out troubleshooting without turning starting switch ON.			
			WEC3 (female)	Resistance		
			Between (35) – (23)	2 – 12 Ω		
			Between (35) – chassis ground	Min. 1 MΩ		

Circuit diagram related to ripper tilt-back EPC solenoid

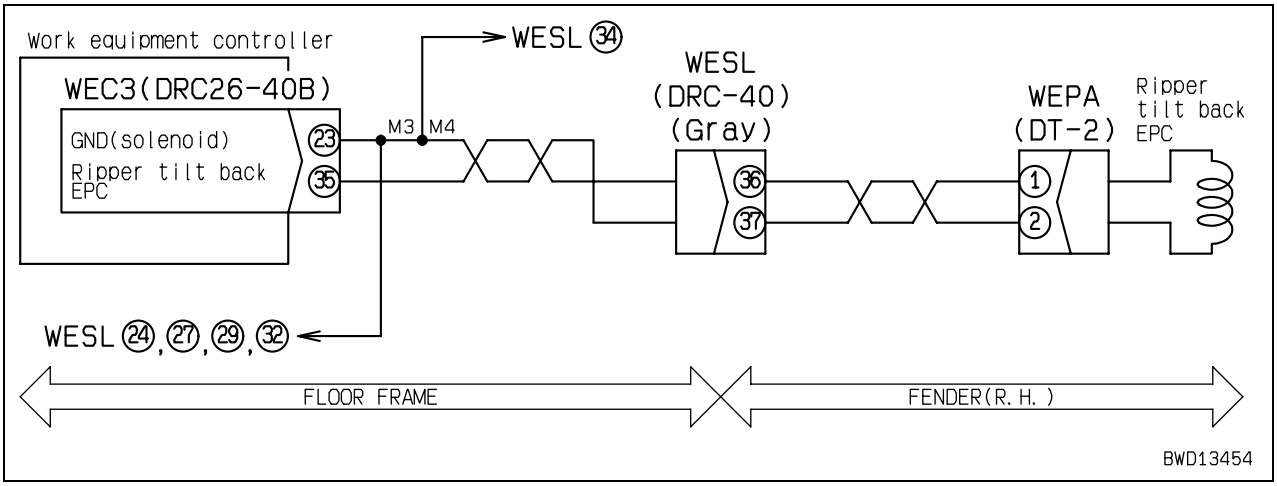

Failure code [DXHZKY] Ripper Tilt Back EPC: Short circuit

Action code	Failure code	Trouble	Ripper Tilt Back EPC: Short circuit (Work equipment controller system)
E03	**DXHZKY**		
Contents of trouble	• When signal was output to ripper tilt-back EPC solenoid circuit, abnormal current flowed.		
Action of controller	• Turns signal to ripper tilt-back EPC solenoid circuit OFF. • Limits operation of engine and transmission.		
Problem that appears on machine	• Ripper cannot be tilted back. • Once machine is stopped, engine speed is limited to medium (half). • Once machine is stopped, travel is limited to R1.		
Related information	• Output to ripper tilt-back EPC solenoid can be checked with monitoring function. (Code: 71107 Ripper Tilt Back EPC (F/B)) • Method of reproducing failure code: Turn starting switch ON + Operate ripper control lever (Tilt back).		

	Cause		Standard value in normal state/Remarks on troubleshooting		
Possible causes and standard value in normal state	1	Defective ripper tilt-back EPC solenoid (Internal short circuit)	★ Prepare with starting switch OFF, then carry out troubleshooting without turning starting switch ON.		
			WEPA (male)	Resistance	
			Between (1) – (2)	2 – 12 Ω	
			Between (1) – chassis ground	Min. 1 MΩ	
	2	Hot short (Short circuit with 24V circuit) in wiring harness	★ Prepare with starting switch OFF, then turn starting switch ON and carry out troubleshooting.		
			Wiring harness between WEC3 (female) (35) – WEPA (female) (1) and chassis ground	Voltage	Max. 1 V
	3	Defective work equipment controller	★ Prepare with starting switch OFF, then carry out troubleshooting without turning starting switch ON.		
			WEC3 (female)	Resistance	
			Between (35) – (23)	2 – 12 Ω	
			Between (35) – chassis ground	Min. 1 MΩ	

Circuit diagram related to ripper tilt-back EPC solenoid

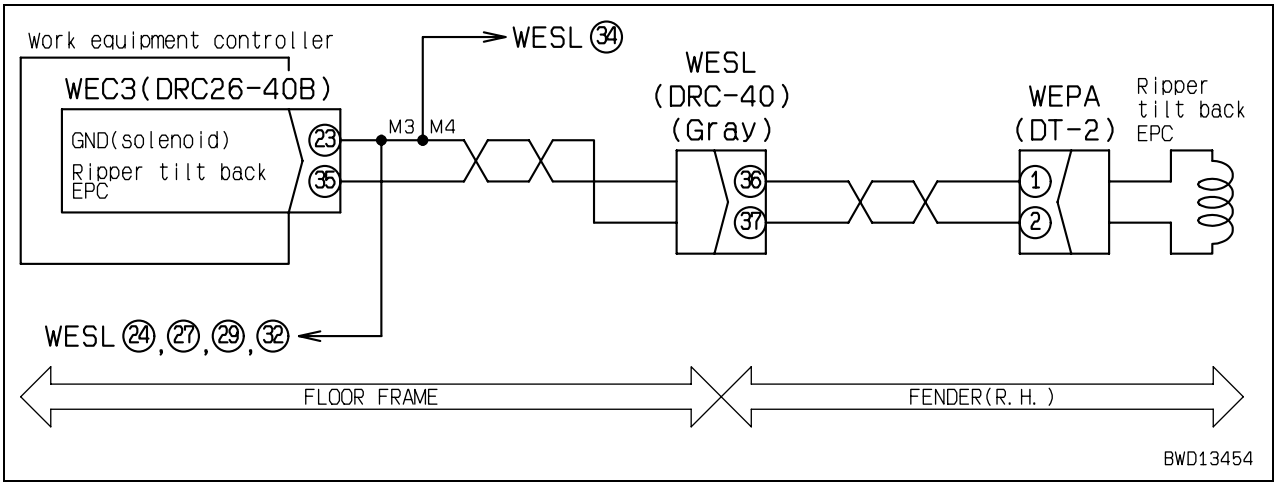

Failure code [DXJ4KA] Weq lock Sol.: Disconnection

Action code	Failure code	Trouble	Weq lock Sol.: Disconnection (Work equipment controller system)
E03	**DXJ4KA**		
Contents of trouble	• When signal is output to work equipment lock solenoid circuit, no current flows.		
Action of controller	• Turns signal to work equipment lock solenoid circuit OFF.		
Problem that appears on machine	• Blade and ripper cannot be operated.		
Related information	• Method of reproducing failure code: Turn starting switch ON + Operate work equipment lock lever (Free).		

	Cause		Standard value in normal state/Remarks on troubleshooting		
Possible causes and standard value in normal state	1	Defective work equipment lock solenoid (Internal disconnection)	★ Prepare with starting switch OFF, then carry out troubleshooting without turning starting switch ON.		
			WLK (male)	Resistance	
			Between (1) – (2)	20 – 60 Ω	
	2	Disconnection in wiring harness (Disconnection in wiring or defective contact in connector)	★ Prepare with starting switch OFF, then carry out troubleshooting without turning starting switch ON.		
			Wiring harness between WEC3 (female) (8) – WLK (female) (1)	Resistance	Max. 1 Ω
			Wiring harness between WEC3 (female) (3) – WLK (female) (2)	Resistance	Max. 1 Ω
	3	Defective work equipment controller	★ Prepare with starting switch OFF, then carry out troubleshooting without turning starting switch ON.		
			WEC3 (female)	Resistance	
			Between (8) – (3)	20 – 60 Ω	

Circuit diagram related to work equipment lock solenoid

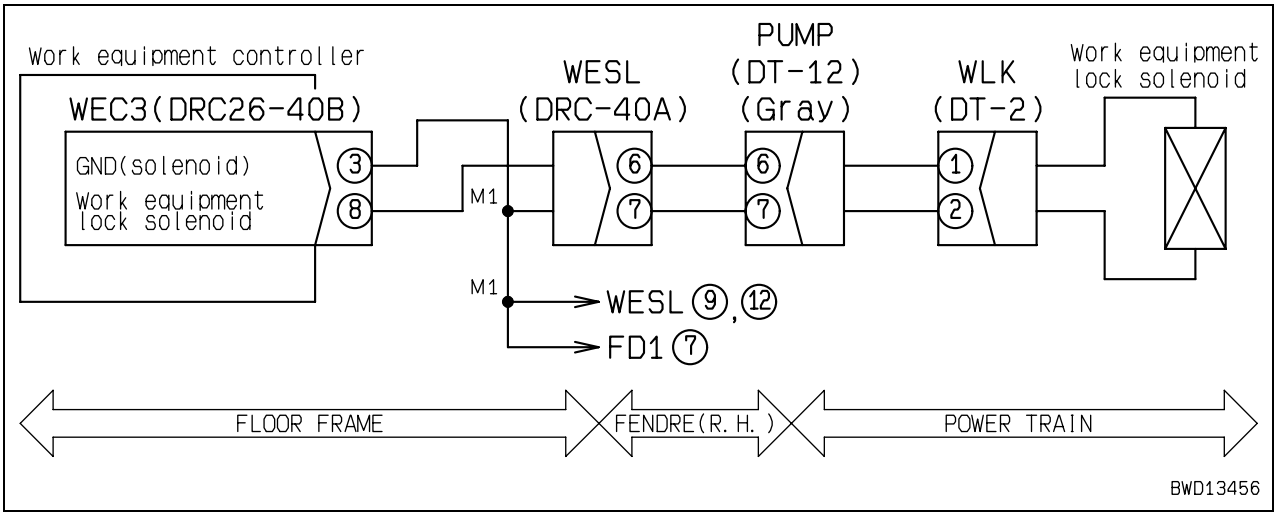

Failure code [DXJ4KB] Weq lock Sol.: Short circuit

Action code	Failure code	Trouble	Weq lock Sol.: Short circuit (Work equipment controller system)
E03	**DXJ4KB**		
Contents of trouble	• When signal was output to work equipment lock solenoid circuit, abnormal current flowed.		
Action of controller	• Turns signal to work equipment lock solenoid circuit OFF.		
Problem that appears on machine	• Blade and ripper cannot be operated.		
Related information	• Method of reproducing failure code: Turn starting switch ON + Operate work equipment lock lever (Free).		

	Cause		Standard value in normal state/Remarks on troubleshooting			
Possible causes and standard value in normal state	1	Defective work equipment lock solenoid (Internal short circuit)	★ Prepare with starting switch OFF, then carry out troubleshooting without turning starting switch ON.			
			WLK (male)	Resistance		
			Between (1) – (2)	20 – 60 Ω		
			Between (1) – chassis ground	Min. 1 MΩ		
	2	Ground fault in wiring harness (Contact with GND circuit)	★ Prepare with starting switch OFF, then carry out troubleshooting without turning starting switch ON.			
			Wiring harness between WEC3 (female) (8) – WLK (female) (1) and chassis ground	Resistance	Min. 1 MΩ	
	3	Hot short (Short circuit with 24V circuit) in wiring harness	★ Prepare with starting switch OFF, then turn starting switch ON and carry out troubleshooting.			
			Wiring harness between WEC3 (female) (8) – WLK (female) (1) and chassis ground	Voltage	Max. 1 V	
	4	Defective work equipment controller	★ Prepare with starting switch OFF, then carry out troubleshooting without turning starting switch ON.			
			WEC3 (female)	Resistance		
			Between (8) – (3)	20 – 60 Ω		
			Between (8) – chassis ground	Min. 1 MΩ		

Circuit diagram related to work equipment lock solenoid

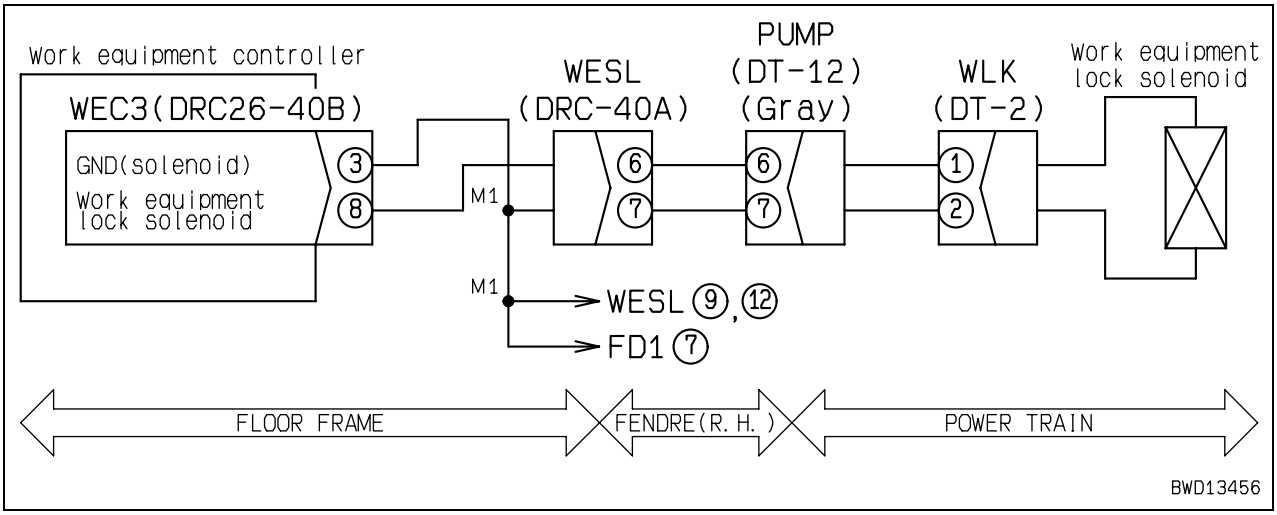

D155AX-6 Bulldozer

Form No. SEN00722-01

© 2006 KOMATSU
All Rights Reserved
Printed in Japan 05-06 (02)

BULLDOZER

D155AX-6

Machine model	Serial number
D155AX-6	80001 and up

40 Troubleshooting

Troubleshooting by failure and error codes, Part 8

Troubleshooting by failure and error codes, Part 8 2
Failure code [DXJ8KA] Blade left 2 EPC: Disconnection 2
Failure code [DXJ8KB] Blade left 2 EPC: Short circuit 3
Failure code [DXJ8KY] Blade left 2 EPC: Short circuit 4
Failure code [DXJ9KA] Blade right 2 EPC: Disconnection 5
Failure code [DXJ9KB] Blade right 2 EPC: Short circuit 6
Failure code [DXJ9KY] Blade right 2 EPC: Short circuit 7
Failure code [DXJAKA] Q-drop EPC: Disconnection 8
Failure code [DXJAKB] Q-drop EPC: Short circuit 10
Failure code [DXJAKY] Q-drop EPC: Short circuit 12
Failure code [DXJBKA] S/C ECMV: Disconnection 14
Failure code [DXJBKB] S/C ECMV: Short circuit 16
Failure code [DXJBKY] S/C ECMV: Short circuit 18

Troubleshooting by failure and error codes, Part 8

Failure code [DXJ8KA] Blade left 2 EPC: Disconnection

Action code	Failure code	Trouble	Blade left 2 EPC: Disconnection (Work equipment controller system)
E03	**DXJ8KA**		
Contents of trouble	• When signal is output to blade tilt left bottom EPC solenoid circuit, no current flows.		
Action of controller	• Turns signal to blade tilt left bottom EPC solenoid circuit OFF. • Limits operation of engine and transmission.		
Problem that appears on machine	• Blade tilt cylinder or pitch left cylinder cannot be extended. • Once machine is stopped, engine speed is limited to medium (half). • Once machine is stopped, travel is limited to R1.		
Related information	• Output to blade tilt left bottom EPC solenoid can be checked with monitoring function. (Code: 71007 Blade Tilt LH-B EPC (F/B)) • Method of reproducing failure code: Turn starting switch ON + Operate blade control lever (Pitch forward).		

	Cause		Standard value in normal state/Remarks on troubleshooting		
Possible causes and standard value in normal state	1	Defective blade tilt left bottom EPC solenoid (Internal disconnection)	★ Prepare with starting switch OFF, then carry out troubleshooting without turning starting switch ON.		
			WEP4 (male)	Resistance	
			Between (1) – (2)	2 – 12 Ω	
	2	Disconnection in wiring harness (Disconnection in wiring or defective contact in connector)	★ Prepare with starting switch OFF, then carry out troubleshooting without turning starting switch ON.		
			Wiring harness between WEC3 (female) (38) – WEP4 (female) (1)	Resistance	Max. 1 Ω
			Wiring harness between WEC3 (female) (13) – WEP4 (female) (2)	Resistance	Max. 1 Ω
	3	Defective work equipment controller	★ Prepare with starting switch OFF, then carry out troubleshooting without turning starting switch ON.		
			WEC3 (female)	Resistance	
			Between (38) – (13)	2 – 12 Ω	

Circuit diagram related to blade tilt left bottom EPC solenoid

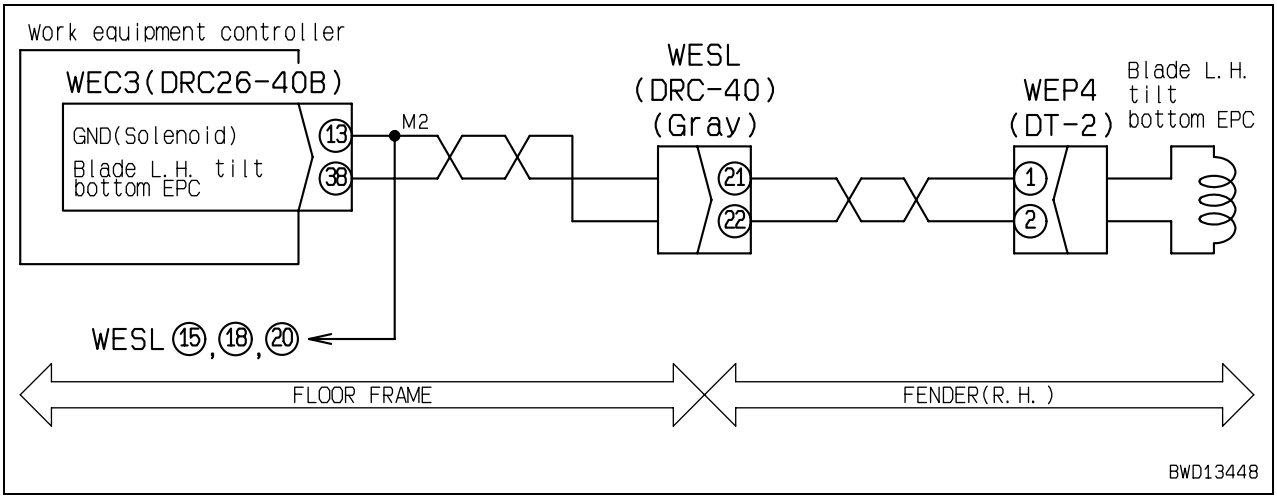

Failure code [DXJ8KB] Blade left 2 EPC: Short circuit

Action code	Failure code	Trouble	Blade left 2 EPC: Short circuit (Work equipment controller system)
E03	**DXJ8KB**		
Contents of trouble	• When signal was output to blade tilt left bottom EPC solenoid circuit, abnormal current flowed.		
Action of controller	• Turns signal to blade tilt left bottom EPC solenoid circuit OFF. • Limits operation of engine and transmission.		
Problem that appears on machine	• Blade tilt cylinder or pitch left cylinder cannot be extended. • Once machine is stopped, engine speed is limited to medium (half). • Once machine is stopped, travel is limited to R1.		
Related information	• Output to blade tilt left bottom EPC solenoid can be checked with monitoring function. (Code: 71007 Blade Tilt LH-B EPC (F/B)) • Method of reproducing failure code: Turn starting switch ON + Operate blade control lever (Pitch forward).		

	Cause		Standard value in normal state/Remarks on troubleshooting			
Possible causes and standard value in normal state	1	Defective blade tilt left bottom EPC solenoid (Internal short circuit)	★ Prepare with starting switch OFF, then carry out troubleshooting without turning starting switch ON.			
			WEP4 (male)	Resistance		
			Between (1) – (2)	2 – 12 Ω		
			Between (1) – chassis ground	Min. 1 MΩ		
	2	Ground fault in wiring harness (Contact with GND circuit)	★ Prepare with starting switch OFF, then carry out troubleshooting without turning starting switch ON.			
			Wiring harness between WEC3 (female) (38) – WEP4 (female) (1) and chassis ground	Resistance	Min. 1 MΩ	
	3	Defective work equipment controller	★ Prepare with starting switch OFF, then carry out troubleshooting without turning starting switch ON.			
			WEC3 (female)	Resistance		
			Between (38) – (13)	2 – 12 Ω		
			Between (38) – chassis ground	Min. 1 MΩ		

Circuit diagram related to blade tilt left bottom EPC solenoid

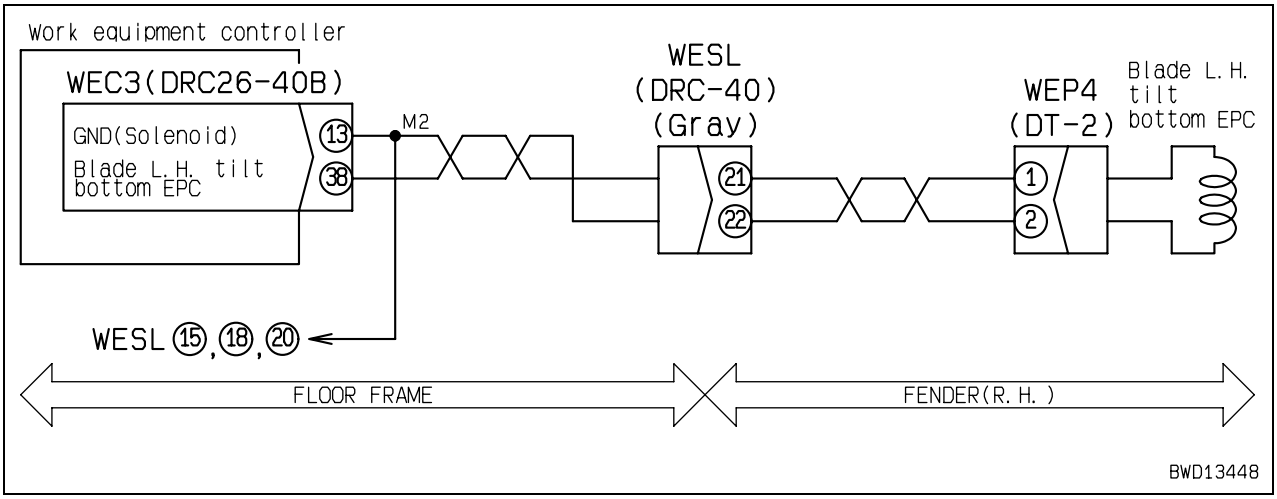

Failure code [DXJ8KY] Blade left 2 EPC: Short circuit

Action code	Failure code	Trouble	Blade left 2 EPC: Short circuit (Work equipment controller system)
E03	**DXJ8KY**		
Contents of trouble	• When signal was output to blade tilt left bottom EPC solenoid circuit, abnormal current flowed.		
Action of controller	• Turns signal to blade tilt left bottom EPC solenoid circuit OFF. • Limits operation of engine and transmission.		
Problem that appears on machine	• Blade tilt cylinder or pitch left cylinder cannot be extended. • Once machine is stopped, engine speed is limited to medium (half). • Once machine is stopped, travel is limited to R1.		
Related information	• Output to blade tilt left bottom EPC solenoid can be checked with monitoring function. (Code: 71007 Blade Tilt LH-B EPC (F/B)) • Method of reproducing failure code: Turn starting switch ON + Operate blade control lever (Pitch forward).		

	Cause		Standard value in normal state/Remarks on troubleshooting		
Possible causes and standard value in normal state	1	Defective blade tilt left bottom EPC solenoid (Internal short circuit)	★ Prepare with starting switch OFF, then carry out troubleshooting without turning starting switch ON.		
			WEP4 (male)	Resistance	
			Between (1) – (2)	2 – 12 Ω	
			Between (1) – chassis ground	Min. 1 MΩ	
	2	Hot short (Short circuit with 24V circuit) in wiring harness	★ Prepare with starting switch OFF, then turn starting switch ON and carry out troubleshooting.		
			Wiring harness between WEC3 (female) (38) – WEP4 (female) (1) and chassis ground	Voltage	Max. 1 V
	3	Defective work equipment controller	★ Prepare with starting switch OFF, then carry out troubleshooting without turning starting switch ON.		
			WEC3 (female)	Resistance	
			Between (38) – (13)	2 – 12 Ω	
			Between (38) – chassis ground	Min. 1 MΩ	

Circuit diagram related to blade tilt left bottom EPC solenoid

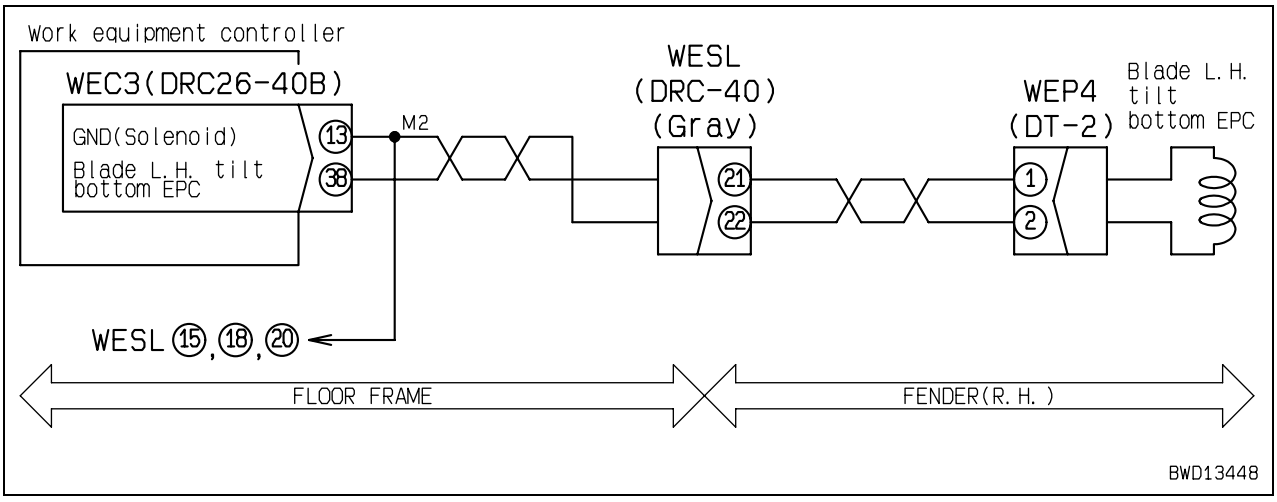

Failure code [DXJ9KA] Blade right 2 EPC: Disconnection

Action code	Failure code	Trouble	Blade right 2 EPC: Disconnection (Work equipment controller system)
E03	**DXJ9KA**		
Contents of trouble	• When signal is output to blade tilt left head EPC solenoid circuit, no current flows.		
Action of controller	• Turns signal to blade tilt left head EPC solenoid circuit OFF. • Limits operation of engine and transmission.		
Problem that appears on machine	• Blade tilt cylinder or pitch left cylinder cannot be retracted. • Once machine is stopped, engine speed is limited to medium (half). • Once machine is stopped, travel is limited to R1.		
Related information	• Output to blade tilt left head EPC solenoid can be checked with monitoring function. (Code: 71005 Blade Tilt LH-H EPC (F/B)) • Method of reproducing failure code: Turn starting switch ON + Operate blade control lever (Pitch back).		

	Cause		Standard value in normal state/Remarks on troubleshooting			
Possible causes and standard value in normal state	1	Defective blade tilt left head EPC solenoid (Internal disconnection)	★ Prepare with starting switch OFF, then carry out troubleshooting without turning starting switch ON.			
			WEP3 (male)	Resistance		
			Between (1) – (2)	2 – 12 Ω		
	2	Disconnection in wiring harness (Disconnection in wiring or defective contact in connector)	★ Prepare with starting switch OFF, then carry out troubleshooting without turning starting switch ON.			
			Wiring harness between WEC3 (female) (28) – WEP3 (female) (1)	Resistance	Max. 1 Ω	
			Wiring harness between WEC3 (female) (13) – WEP3 (female) (2)	Resistance	Max. 1 Ω	
	3	Defective work equipment controller	★ Prepare with starting switch OFF, then carry out troubleshooting without turning starting switch ON.			
			WEC3 (female)	Resistance		
			Between (28) – (13)	2 – 12 Ω		

Circuit diagram related to blade tilt left head EPC solenoid

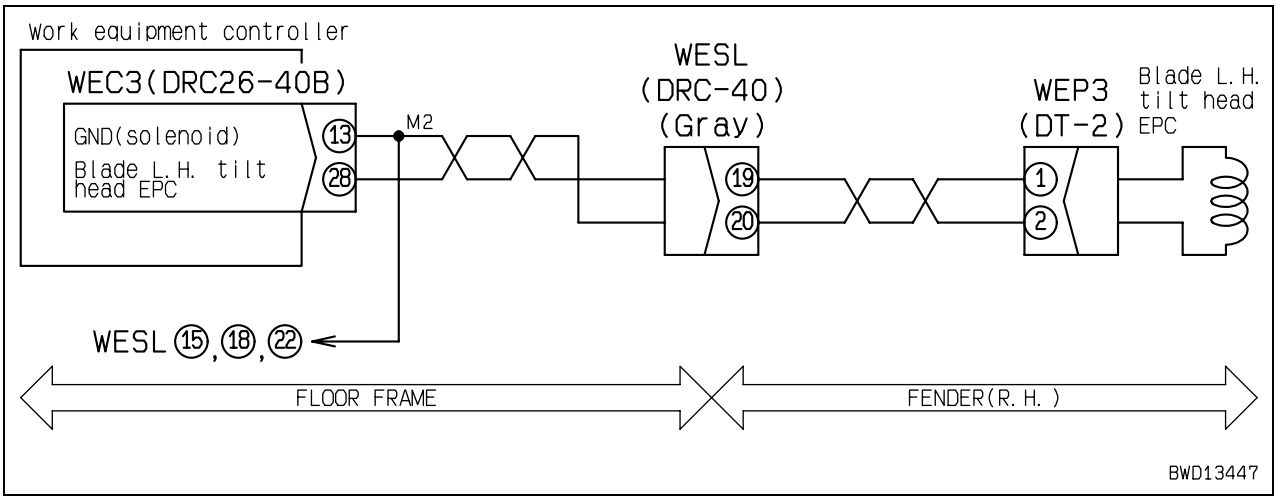

Failure code [DXJ9KB] Blade right 2 EPC: Short circuit

Action code	Failure code	Trouble	Blade right 2 EPC: Short circuit (Work equipment controller system)
E03	**DXJ9KB**		
Contents of trouble	• When signal was output to blade tilt left head EPC solenoid circuit, abnormal current flowed.		
Action of controller	• Turns signal to blade tilt left head EPC solenoid circuit OFF. • Limits operation of engine and transmission.		
Problem that appears on machine	• Blade tilt cylinder or pitch left cylinder cannot be retracted. • Once machine is stopped, engine speed is limited to medium (half). • Once machine is stopped, travel is limited to R1.		
Related information	• Output to blade tilt left head EPC solenoid can be checked with monitoring function. (Code: 71005 Blade Tilt LH-H EPC (F/B)) • Method of reproducing failure code: Turn starting switch ON + Operate blade control lever (Pitch back).		

	Cause		Standard value in normal state/Remarks on troubleshooting			
Possible causes and standard value in normal state	1	Defective blade tilt left head EPC solenoid (Internal disconnection)	★ Prepare with starting switch OFF, then carry out troubleshooting without turning starting switch ON.			
			WEP3 (male)	Resistance		
			Between (1) – (2)	2 – 12 Ω		
			Between (1) – chassis ground	Min. 1 MΩ		
	2	Ground fault in wiring harness (Contact with GND circuit)	★ Prepare with starting switch OFF, then carry out troubleshooting without turning starting switch ON.			
			Wiring harness between WEC3 (female) (28) – WEP3 (female) (1) and chassis ground	Resistance	Min. 1 MΩ	
	3	Defective work equipment controller	★ Prepare with starting switch OFF, then carry out troubleshooting without turning starting switch ON.			
			WEC3 (female)	Resistance		
			Between (28) – (13)	2 – 12 Ω		
			Between (28) – chassis ground	Min. 1 MΩ		

Circuit diagram related to blade tilt left head EPC solenoid

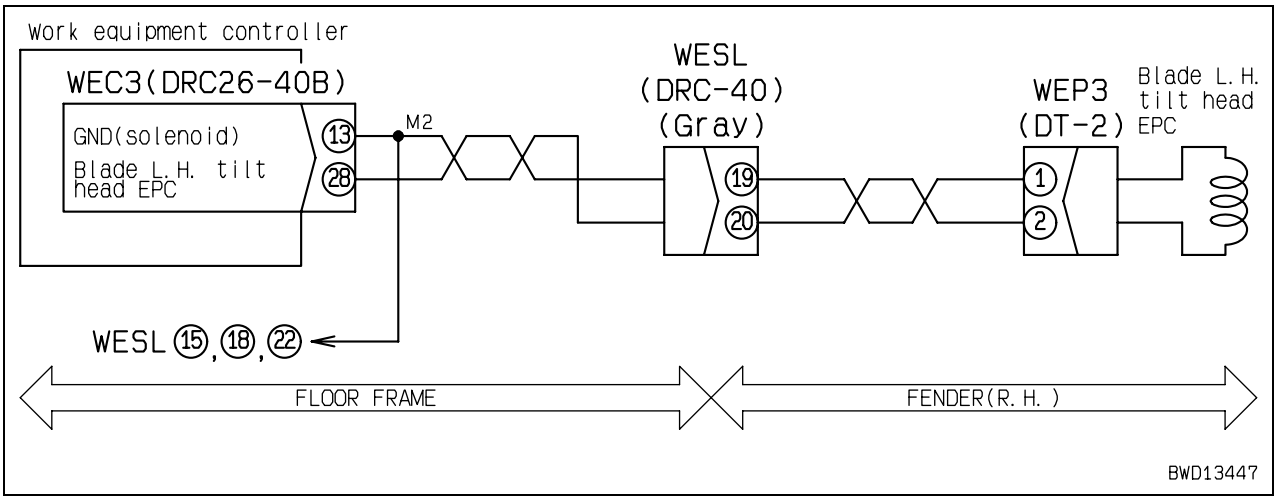

Failure code [DXJ9KY] Blade right 2 EPC: Short circuit

Action code	Failure code	Trouble	Blade right 2 EPC: Short circuit (Work equipment controller system)
E03	**DXJ9KY**		
Contents of trouble	• When signal was output to blade tilt left head EPC solenoid circuit, abnormal current flowed.		
Action of controller	• Turns signal to blade tilt left head EPC solenoid circuit OFF. • Limits operation of engine and transmission.		
Problem that appears on machine	• Blade tilt cylinder or pitch left cylinder cannot be retracted. • Once machine is stopped, engine speed is limited to medium (half). • Once machine is stopped, travel is limited to R1.		
Related information	• Output to blade tilt left head EPC solenoid can be checked with monitoring function. (Code: 71005 Blade Tilt LH-H EPC (F/B)) • Method of reproducing failure code: Turn starting switch ON + Operate blade control lever (Pitch back).		

	Cause		Standard value in normal state/Remarks on troubleshooting		
Possible causes and standard value in normal state	1	Defective blade tilt left head EPC solenoid (Internal short circuit)	★ Prepare with starting switch OFF, then carry out troubleshooting without turning starting switch ON.		
			WEP3 (male)	Resistance	
			Between (1) – (2)	2 – 12 Ω	
			Between (1) – chassis ground	Min. 1 MΩ	
	2	Hot short in wiring harness (Contact with GND circuit)	★ Prepare with starting switch OFF, then turn starting switch ON and carry out troubleshooting.		
			Wiring harness between WEC3 (female) (28) – WEP3 (female) (1) and chassis ground	Voltage	Max. 1 V
	3	Defective work equipment controller	★ Prepare with starting switch OFF, then carry out troubleshooting without turning starting switch ON.		
			WEC3 (female)	Resistance	
			Between (28) – (13)	2 – 12 Ω	
			Between (28) – chassis ground	Min. 1 MΩ	

Circuit diagram related to blade tilt left head EPC solenoid

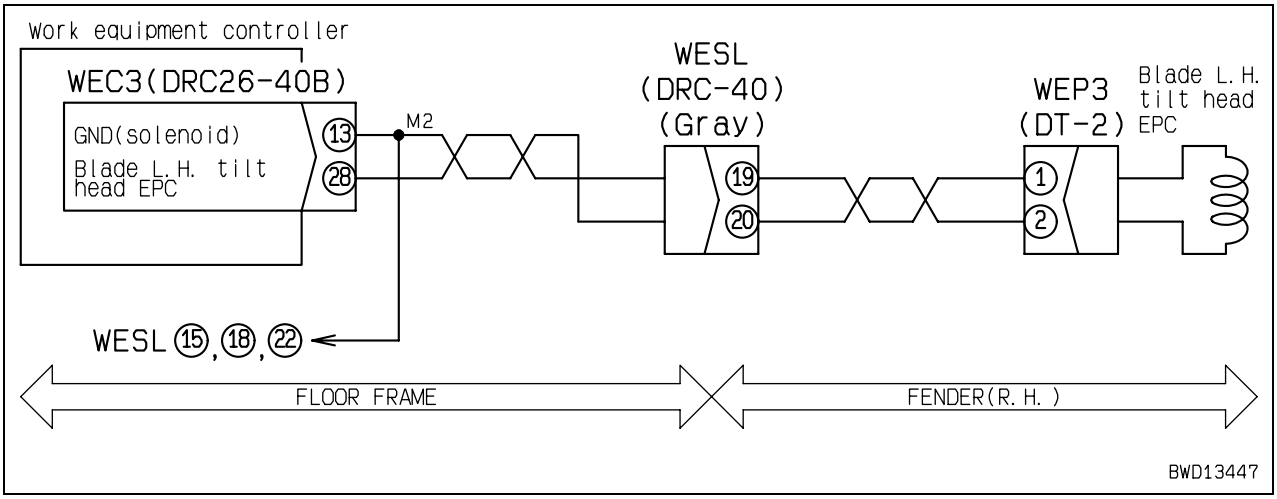

Failure code [DXJAKA] Q-drop EPC: Disconnection

Action code	Failure code	Trouble	Q-drop EPC: Disconnection (Work equipment controller system)
E01	**DXJAKA**		
Contents of trouble	• When signal is output to blade quick drop EPC solenoid circuit, no current flows.		
Action of controller	• Turns signal to blade quick drop EPC solenoid circuit OFF.		
Problem that appears on machine	• Blade quick drop function does not operate.		
Related information	• Output to blade quick drop EPC solenoid can be checked with monitoring function. (Code: 90900 Quick Drop Solenoid (F/B)) • Method of reproducing failure code: Turn starting switch ON + Operate blade control lever (Lower).		

	Cause		Standard value in normal state/Remarks on troubleshooting		
Possible causes and standard value in normal state	1	Defective blade quick drop EPC solenoid (Internal disconnection)	★ Prepare with starting switch OFF, then carry out troubleshooting without turning starting switch ON.		
			QDP (male)	Resistance	
			Between (1) – (2)	4.5 – 14.5 Ω	
	2	Disconnection in wiring harness (Disconnection in wiring or defective contact in connector)	★ Prepare with starting switch OFF, then carry out troubleshooting without turning starting switch ON.		
			Wiring harness between WEC3 (female) (37) – QDP (female) (1)	Resistance	Max. 1 Ω
			Wiring harness between WEC3 (female) (3) – QDP (female) (2)	Resistance	Max. 1 Ω
	3	Defective work equipment controller	★ Prepare with starting switch OFF, then carry out troubleshooting without turning starting switch ON.		
			WEC3 (female)	Resistance	
			Between (37) – (3)	4.5 – 14.5 Ω	

Circuit diagram related to blade quick drop EPC solenoid

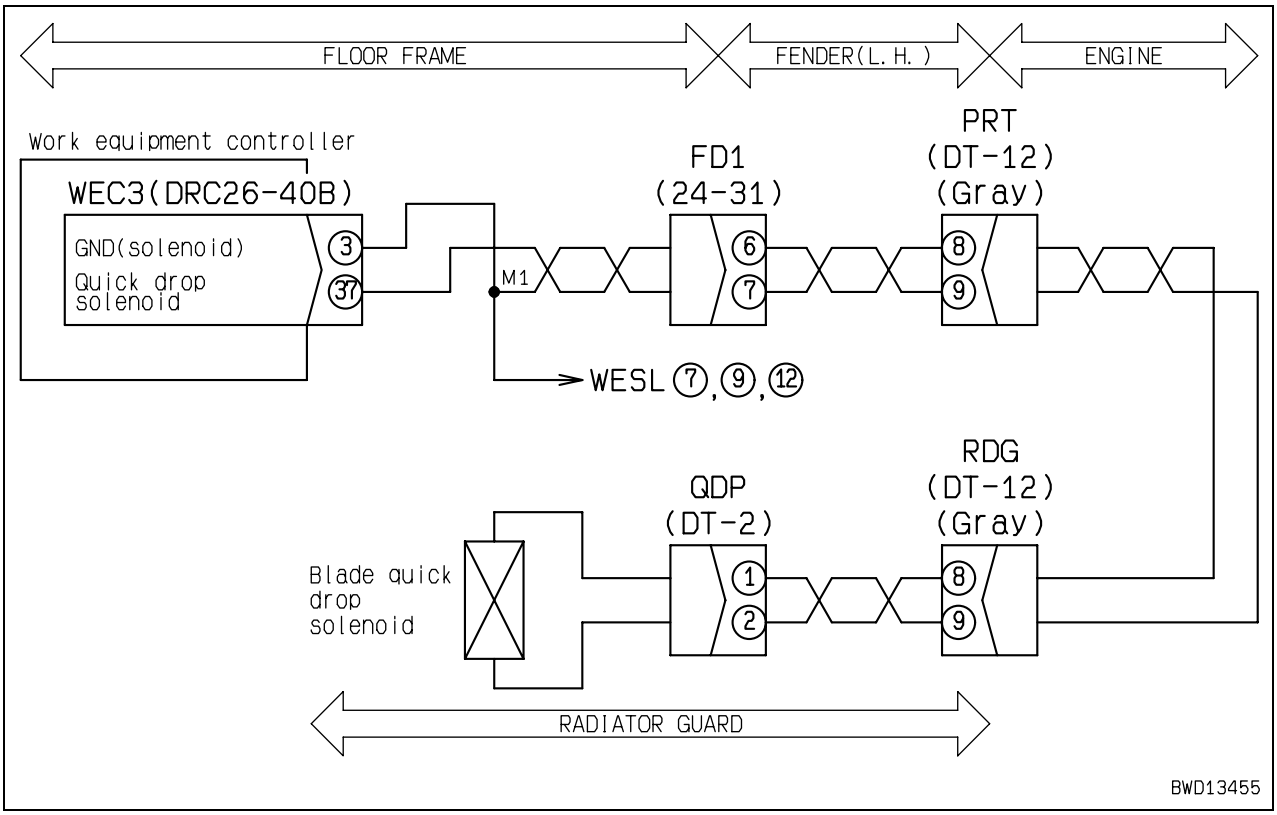

Failure code [DXJAKB] Q-drop EPC: Short circuit

Action code	Failure code	Trouble	Q-drop EPC: Short circuit (Work equipment controller system)
E01	**DXJAKB**		
Contents of trouble	• When signal was output to blade quick drop EPC solenoid circuit, abnormal current flowed.		
Action of controller	• Turns signal to blade quick drop EPC solenoid circuit OFF.		
Problem that appears on machine	• Blade quick drop function does not operate.		
Related information	• Output to blade quick drop EPC solenoid can be checked with monitoring function. (Code: 90900 Quick Drop Solenoid (F/B)) • Method of reproducing failure code: Turn starting switch ON + Operate blade control lever (Lower).		

	Cause		Standard value in normal state/Remarks on troubleshooting			
Possible causes and standard value in normal state	1	Defective blade quick drop EPC solenoid (Internal short circuit)	★ Prepare with starting switch OFF, then carry out troubleshooting without turning starting switch ON.			
			QDP (male)	Resistance		
			Between (1) – (2)	4.5 – 14.5 Ω		
			Between (1) – chassis ground	Min. 1 MΩ		
	2	Ground fault in wiring harness (Contact with GND circuit)	★ Prepare with starting switch OFF, then carry out troubleshooting without turning starting switch ON.			
			Wiring harness between WEC3 (female) (37) – QDP (female) (1) and chassis ground	Resistance	Min. 1 MΩ	
	3	Defective work equipment controller	★ Prepare with starting switch OFF, then carry out troubleshooting without turning starting switch ON.			
			WEC3 (female)	Resistance		
			Between (37) – (3)	4.5 – 14.5 Ω		
			Between (37) – chassis ground	Min. 1 MΩ		

Circuit diagram related to blade quick drop EPC solenoid

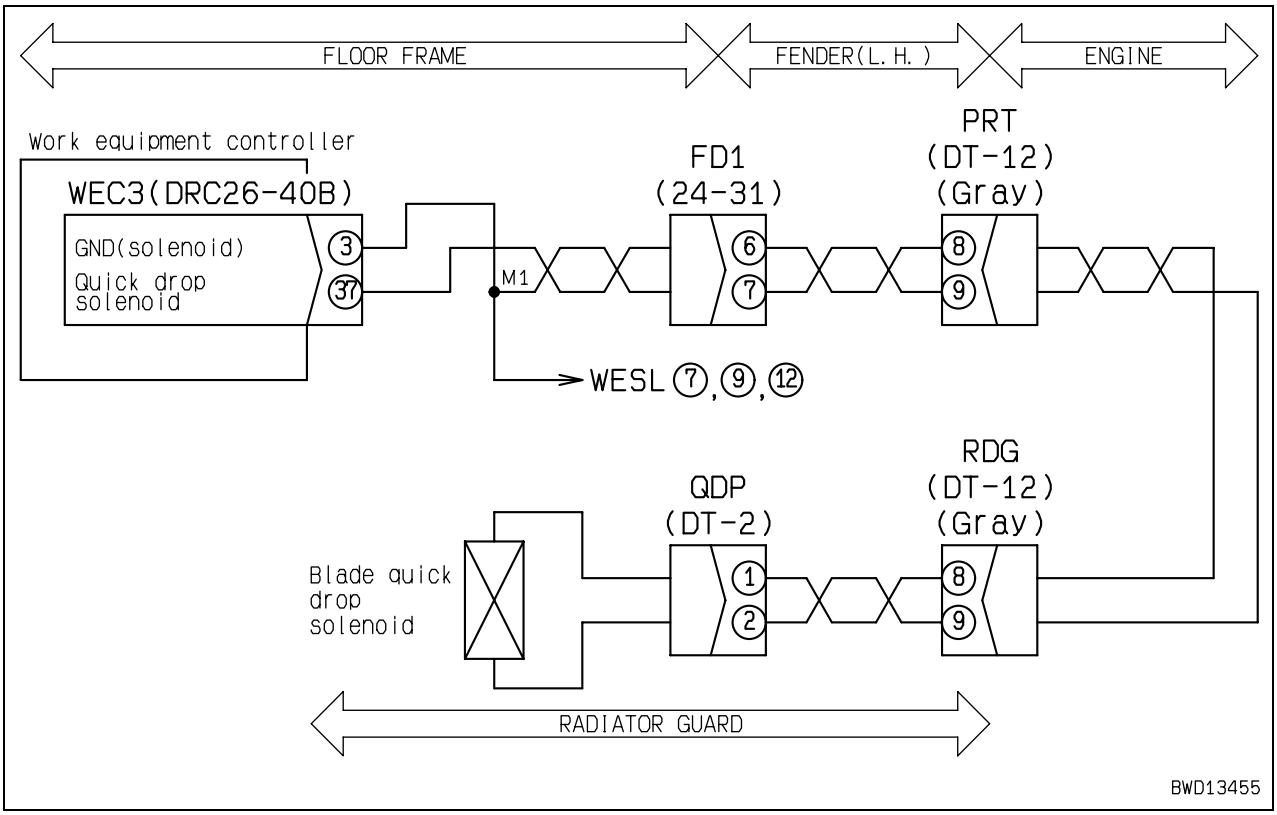

Failure code [DXJAKY] Q-drop EPC: Short circuit

Action code	Failure code	Trouble	Q-drop EPC: Short circuit (Work equipment controller system)
E01	**DXJAKY**		
Contents of trouble	• When signal was output to blade quick drop EPC solenoid circuit, abnormal current flowed.		
Action of controller	• Turns signal to blade quick drop EPC solenoid circuit OFF.		
Problem that appears on machine	• Blade quick drop function does not operate.		
Related information	• Output to blade quick drop EPC solenoid can be checked with monitoring function. (Code: 90900 Quick Drop Solenoid (F/B)) • Method of reproducing failure code: Turn starting switch ON + Operate blade control lever (Lower).		

	Cause		Standard value in normal state/Remarks on troubleshooting		
Possible causes and standard value in normal state	1	Defective blade quick drop EPC solenoid (Internal short circuit)	★ Prepare with starting switch OFF, then carry out troubleshooting without turning starting switch ON.		
			QDP (male)	Resistance	
			Between (1) – (2)	4.5 – 14.5 Ω	
			Between (1) – chassis ground	Min. 1 MΩ	
	2	Hot short (Short circuit with 24V circuit) in wiring harness	★ Prepare with starting switch OFF, then turn starting switch ON and carry out troubleshooting.		
			Wiring harness between WEC3 (female) (37) – QDP (female) (1) and chassis ground	Voltage	Max. 1 V
	3	Defective work equipment controller	★ Prepare with starting switch OFF, then carry out troubleshooting without turning starting switch ON.		
			WEC3 (female)	Resistance	
			Between (37) – (3)	4.5 – 14.5 Ω	
			Between (37) – chassis ground	Min. 1 MΩ	

Circuit diagram related to blade quick drop EPC solenoid

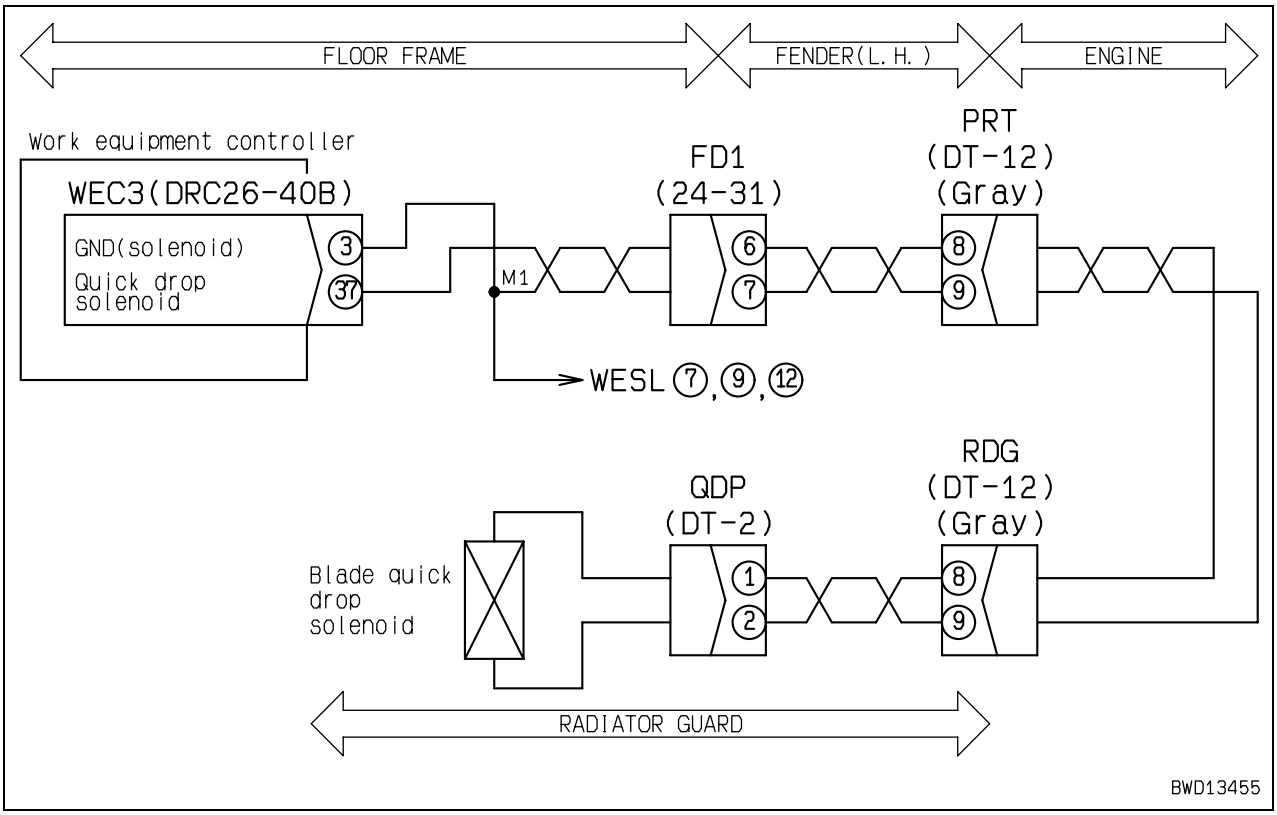

Failure code [DXJBKA] S/C ECMV: Disconnection

Action code	Failure code	Trouble	S/C ECMV: Disconnection (Power train controller system)
E02	**DXJBKA**		
Contents of trouble	• When signal is output to torque converter stator clutch ECMV solenoid circuit, no current flows.		
Action of controller	• Turns signal to torque converter stator clutch ECMV solenoid circuit OFF.		
Problem that appears on machine	• Sufficient torque may not be obtained during travel.		
Related information	• Output to torque converter stator clutch ECMV solenoid can be checked with monitoring function. (Code: 90700 S/C ECMV (F/B)) • Method of reproducing failure code: Turn starting switch ON + Operate parking brake lever (Free).		

	Cause		Standard value in normal state/Remarks on troubleshooting			
Possible causes and standard value in normal state	1	Defective stator clutch ECMV solenoid (Internal disconnection)	★ Prepare with starting switch OFF, then carry out troubleshooting without turning starting switch ON.			
			SSTC (male)	Resistance		
			Between (1) – (2)	5 – 25 Ω		
	2	Disconnection in wiring harness (Disconnection in wiring or defective contact in connector)	★ Prepare with starting switch OFF, then carry out troubleshooting without turning starting switch ON.			
			Wiring harness between STC3 (female) (38) – SSTC (female) (1)	Resistance	Max. 1 Ω	
			Wiring harness between STC3 (female) (13) – SSTC (female) (2)	Resistance	Max. 1 Ω	
	3	Hot short (Short circuit with 24V circuit) in wiring harness	★ Prepare with starting switch OFF, then turn starting switch ON and carry out troubleshooting.			
			Wiring harness between STC3 (female) (38) – SSTC (female) (1) and chassis ground	Voltage	Max. 1 V	
	4	Defective power train controller	★ Prepare with starting switch OFF, then carry out troubleshooting without turning starting switch ON.			
			STC3 (female)	Resistance		
			Between (38) – (13)	5 – 25 Ω		

Circuit diagram related to torque converter stator clutch ECMV

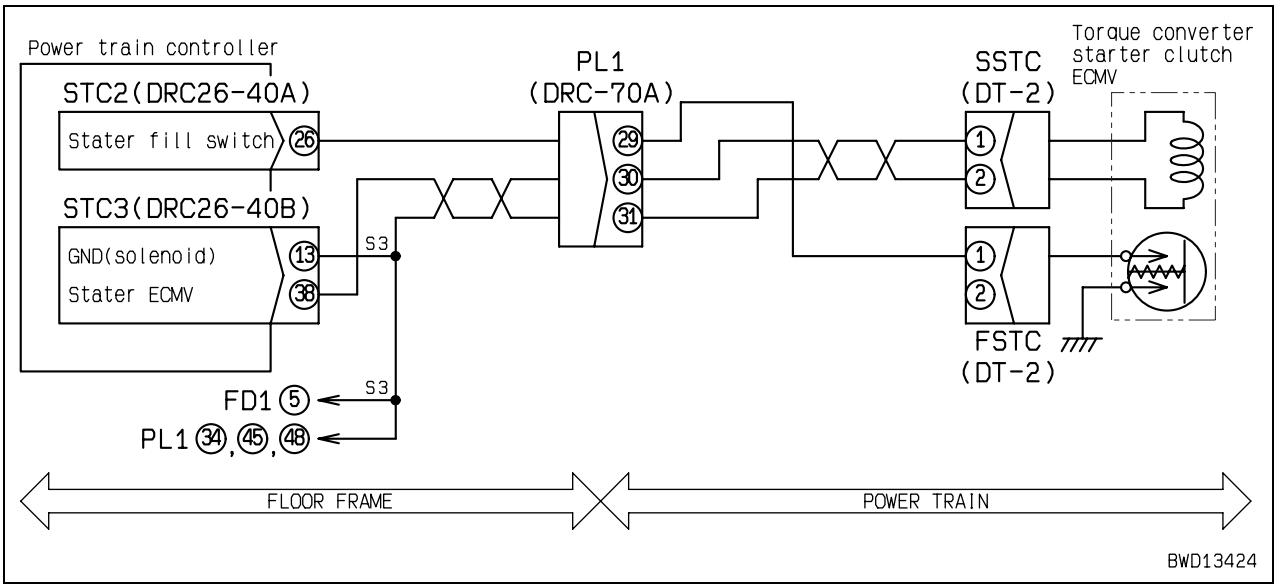

Failure code [DXJBKB] S/C ECMV: Short circuit

Action code	Failure code	Trouble	S/C ECMV: Short circuit (Power train controller system)
E02	**DXJBKB**		
Contents of trouble	• When signal was output to torque converter stator clutch ECMV solenoid circuit, abnormal current flowed.		
Action of controller	• Turns signal to torque converter stator clutch ECMV solenoid circuit OFF.		
Problem that appears on machine	• Sufficient torque may not be obtained during travel.		
Related information	• Output to torque converter stator clutch ECMV solenoid can be checked with monitoring function. (Code: 90700 S/C ECMV (F/B)) • Method of reproducing failure code: Turn starting switch ON + Operate parking brake lever (Free).		

	Cause		Standard value in normal state/Remarks on troubleshooting			
Possible causes and standard value in normal state	1	Defective stator clutch ECMV solenoid (Internal short circuit)	★ Prepare with starting switch OFF, then carry out troubleshooting without turning starting switch ON.			
			SSTC (male)	Resistance		
			Between (1) – (2)	5 – 25 Ω		
			Between (1) – chassis ground	Min. 1 MΩ		
	2	Ground fault in wiring harness (Contact with GND circuit)	★ Prepare with starting switch OFF, then carry out troubleshooting without turning starting switch ON.			
			Wiring harness between STC3 (female) (38) – SSTC (female) (1) and chassis ground	Resistance	Min. 1 MΩ	
	3	Short circuit in wiring harness (with another wiring harness)	★ Prepare with starting switch OFF, then carry out troubleshooting without turning starting switch ON.			
			Wiring harness between STC3 (female) (38) – SSTC (female) (1) and between STC3 (female) (13) – SSTC (female) (2)	Resistance	Min. 1 MΩ	
	4	Defective power train controller	★ Prepare with starting switch OFF, then carry out troubleshooting without turning starting switch ON.			
			STC3 (female)	Resistance		
			Between (38) – (13)	5 – 25 Ω		
			Between (38) – chassis ground	Min. 1 MΩ		

Circuit diagram related to torque converter stator clutch ECMV

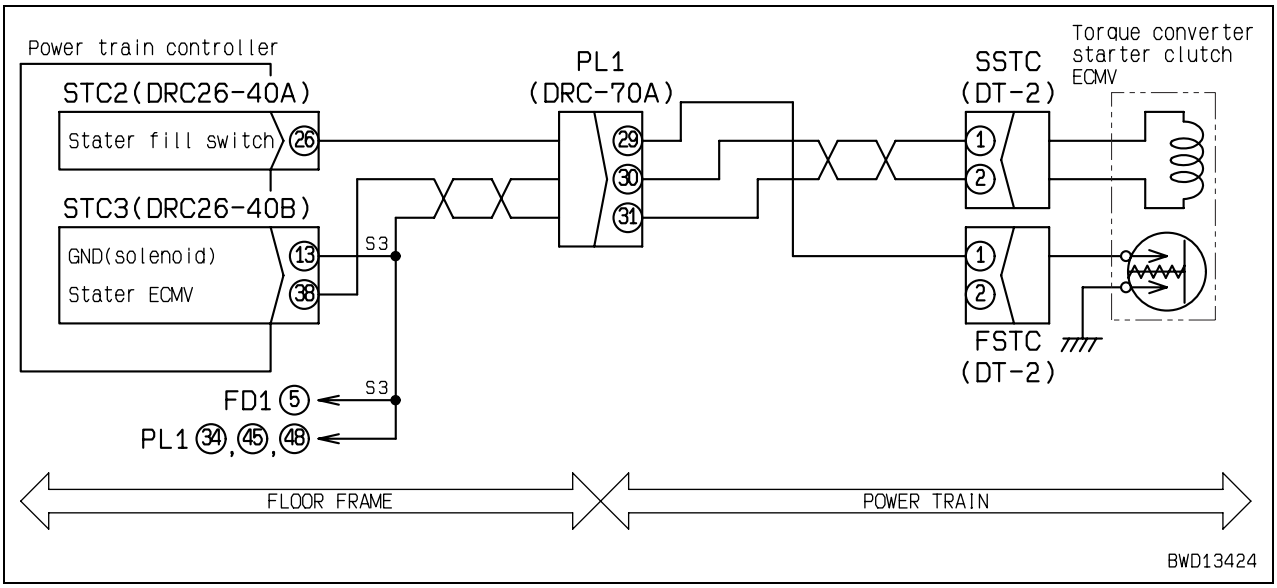

Failure code [DXJBKY] S/C ECMV: Short circuit

Action code	Failure code	Trouble	S/C ECMV: Short circuit (Power train controller system)
E02	**DXJBKY**		
Contents of trouble	• When signal was output to torque converter stator clutch ECMV solenoid circuit, abnormal current flowed.		
Action of controller	• Turns signal to torque converter stator clutch ECMV solenoid circuit OFF.		
Problem that appears on machine	• Sufficient torque may not be obtained during travel.		
Related information	• Output to torque converter stator clutch ECMV solenoid can be checked with monitoring function. (Code: 90700 S/C ECMV (F/B)) • Method of reproducing failure code: Turn starting switch ON + Operate parking brake lever (Free).		

	Cause		Standard value in normal state/Remarks on troubleshooting			
Possible causes and standard value in normal state	1	Defective stator clutch ECMV solenoid (Internal short circuit)	★ Prepare with starting switch OFF, then carry out troubleshooting without turning starting switch ON.			
			SSTC (male)	Resistance		
			Between (1) – (2)	5 – 25 Ω		
			Between (1) – chassis ground	Min. 1 MΩ		
	2	Hot short (Short circuit with 24V circuit) in wiring harness	★ Prepare with starting switch OFF, then turn starting switch ON and carry out troubleshooting.			
			Wiring harness between STC3 (female) (38) – SSTC (female) (1) and chassis ground	Voltage	Max. 1 V	
	3	Short circuit in wiring harness (with another wiring harness)	★ Prepare with starting switch OFF, then carry out troubleshooting without turning starting switch ON.			
			Wiring harness between STC3 (female) (38) – SSTC (female) (1) and between STC3 (female) (13) – SSTC (female) (2)	Resistance	Min. 1 MΩ	
	4	Defective power train controller	★ Prepare with starting switch OFF, then carry out troubleshooting without turning starting switch ON.			
			STC3 (female)	Resistance		
			Between (38) – (13)	5 – 25 Ω		
			Between (38) – chassis ground	Min. 1 MΩ		

Circuit diagram related to torque converter stator clutch ECMV

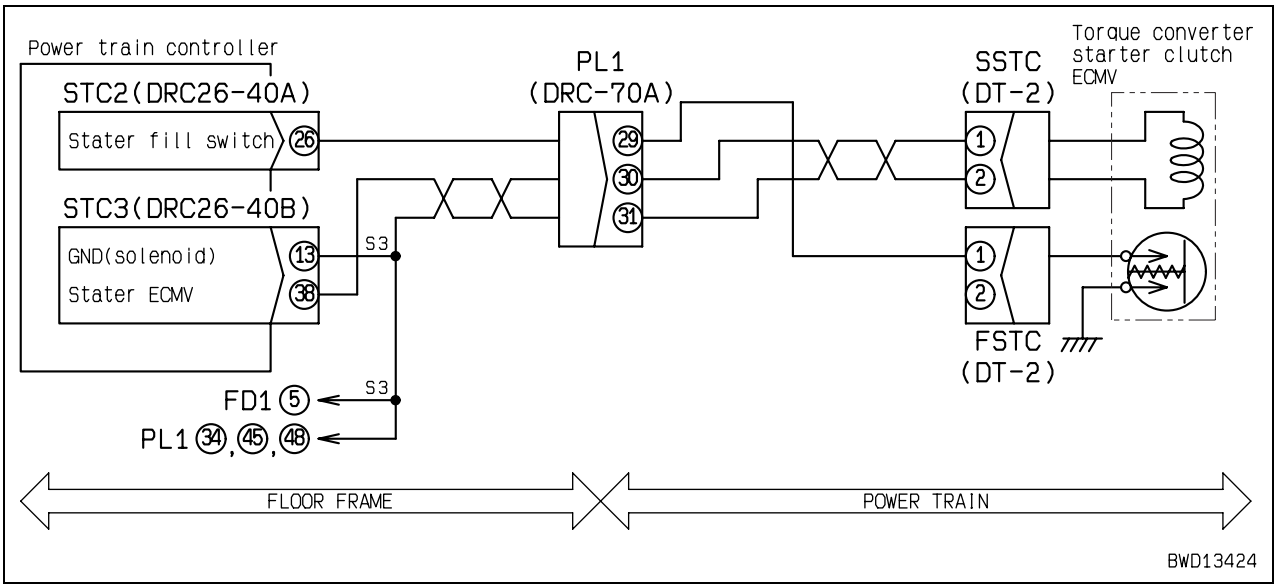

D155AX-6 Bulldozer

Form No. SEN00723-01

© 2006 KOMATSU
All Rights Reserved
Printed in Japan 05-06 (02)

BULLDOZER

D155AX-6

Machine model	Serial number
D155AX-6	80001 and up

40 Troubleshooting

Troubleshooting of electrical system (E-mode)

Troubleshooting of electrical system (E-mode) ... 3
Before carrying out troubleshooting for electrical system ... 3
Information in troubleshooting table ... 7
E-1 When starting switch turned ON, machine monitor displays nothing ... 8
E-2 When starting switch turned ON (before startingengine), basic check item lights up ... 10
E-3 Engine does not start (Engine does not turn) ... 12
E-4 Preheater does not operate ... 14
E-5 Precaution item lights up while engine is running ... 18
E-6 Emergency stop item lights up while engine is running ... 20
E-7 Engine coolant temperature gauge does not indicate normally ... 22
E-8 Fuel level gauge does not indicate normally ... 23
E-9 Power train oil temperature gauge (multi-gauge) does not indicate normally ... 25
E-10 Hydraulic temperature gauge (multi-gauge) does not indicate normally ... 26
E-11 Contents of display by machine monitor are different from applicable machine ... 29

E-12 Machine monitor does not display some items 29
E-13 Function switch does not work 29
E-14 Operation mode does not change 30
E-15 Gearshift mode does not change 30
E-16 Customize function does not operate normally 31
E-17 Customize memory function does not normally 31
E-18 Float mode does not change 32
E-19 Alarm buzzer cannot be stopped 32
E-20 Air conditioner does not operate normally (including air conditioner fault history) 33
E-21 When starting switch is turned OFF, service meter is not displayed 46
E-22 Machine monitor cannot be set in service mode 46
E-23 Ripper pin puller cylinder does not operate 48
E-24 Backup alarm does not sound or does not stop 50
E-25 Headlamp, rear lamp, and ripper point lamp do not light up 52
E-26 Windshield wiper and window washer do not operate 56
E-27 KOMTRAX system does not operate normally 72

Troubleshooting of electrical system (E-mode)

Before carrying out troubleshooting for electrical system

Connection table of circuit breakers and fuse boxes

★ This connection table shows the devices to which each power supply of the fuse box supplies power (An accessory power supply is a device which supplies power while the starting switch is in the ON position and an unswitched power supply is a device which supplies power while the starting switch is in the OFF and ON positions).

★ When carrying out troubleshooting related to the electrical system, you should check the circuit breakers and fuses to see if the power is supplied normally.

Circuit breakers CB1 – CB9

Power circuit breaker (Type of power supply)	Circuit breaker No.	Circuit breaker capacity	Destination of power
CB105 (Accessory power supply)	CB9	20A	Optional power supply
	CB1	20A	Power train controller
			Emergency power supply (For power train switch box)
	CB2	20A	Work equipment controller
			Emergency power supply (For work equipment switch box)
	CB3	20A	Air conditioner unit, blower motor, and compressor electromagnetic clutch
	CB4	20A	Headlamp, additional headlamp
	CB5	20A	Rear lamp, additional rear lamp, ripper point lamp
CB30 (Unswitched power supply)	CB6	20A	Starting switch
			Engine hold relay
	CB7	20A	Machine monitor
			Power train controller
			Work equipment controller
	CB8	30A	Engine controller
CB105H (Unswitched power supply)	—	—	Engine electrical intake air heater

Fuse box FS1

Power circuit breaker (Type of power supply)	Fuse No.	Fuel capacity	Destination of power
CB30 (Unswitched power supply)	1	20A	Operator's cab power supply (To connection table of fuse box Ⅱ)
CB105 (Accessory power supply)	2	5A	Backup alarm, backup alarm relay
	3	20A	Operator's cab power supply (To connection table of fuse box Ⅱ)
	4	20A	Operator's cab power supply (To connection table of fuse box Ⅱ)
Starting switch (ACC)	5	5A	Engine controller (Signal ACC)

Fuse box FS2

Power circuit breaker (Type of power supply)	Fuse No.	Fuel capacity	Destination of power
CB30 (Unswitched power supply)	1	5A	Pedal brake solenoid valve
CB105 (Accessory power supply)	2	5A	Parking brake solenoid valve
	3	20A	Engine electrical intake air heater
			Ripper pin puller solenoid valve
			Pneumatic suspension seat
	4	5A	Horn
Starting switch (ACC)	5	20A	Optional power supply

Locations of circuit breakers CB30, CB105, and CB105H (In battery room)

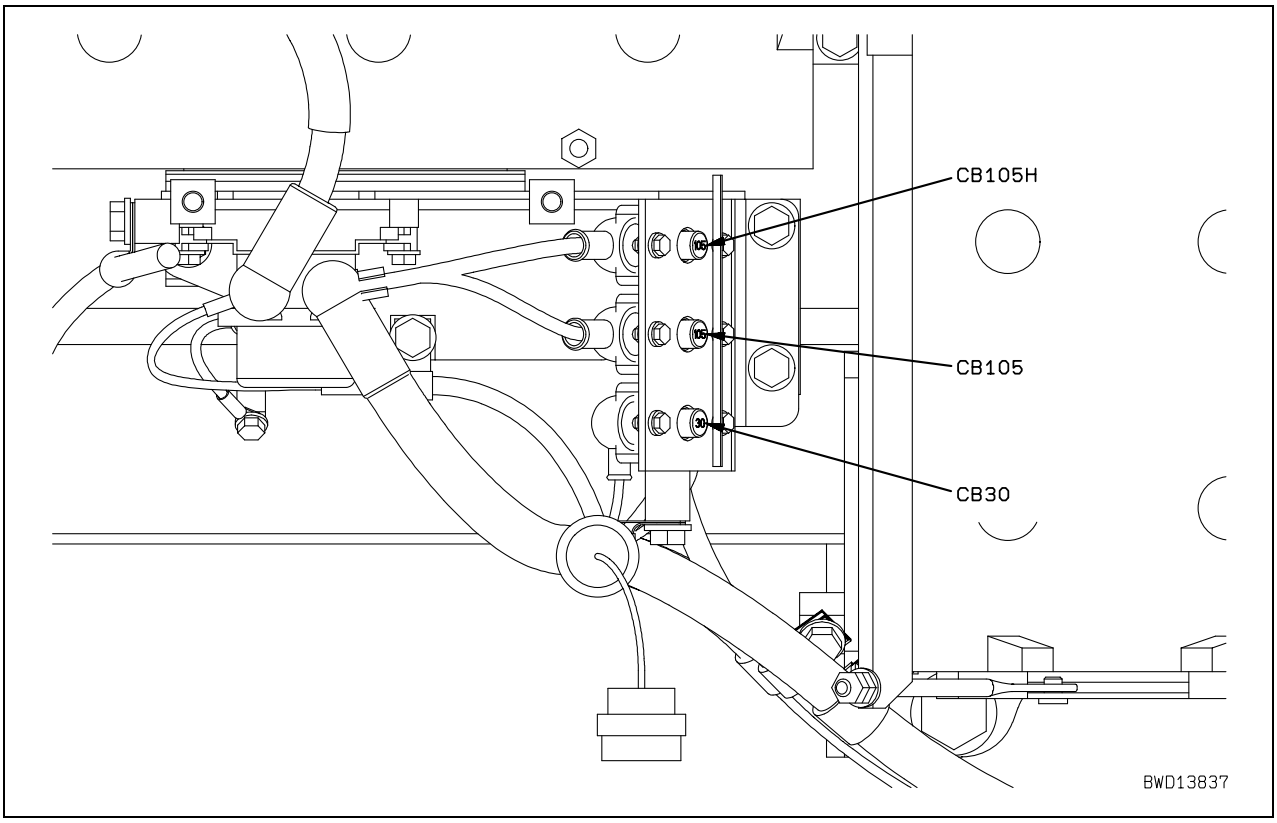

Locations of circuit breakers CB1 – CB9 and fuse boxes FS1 and FS2 (In battery room)

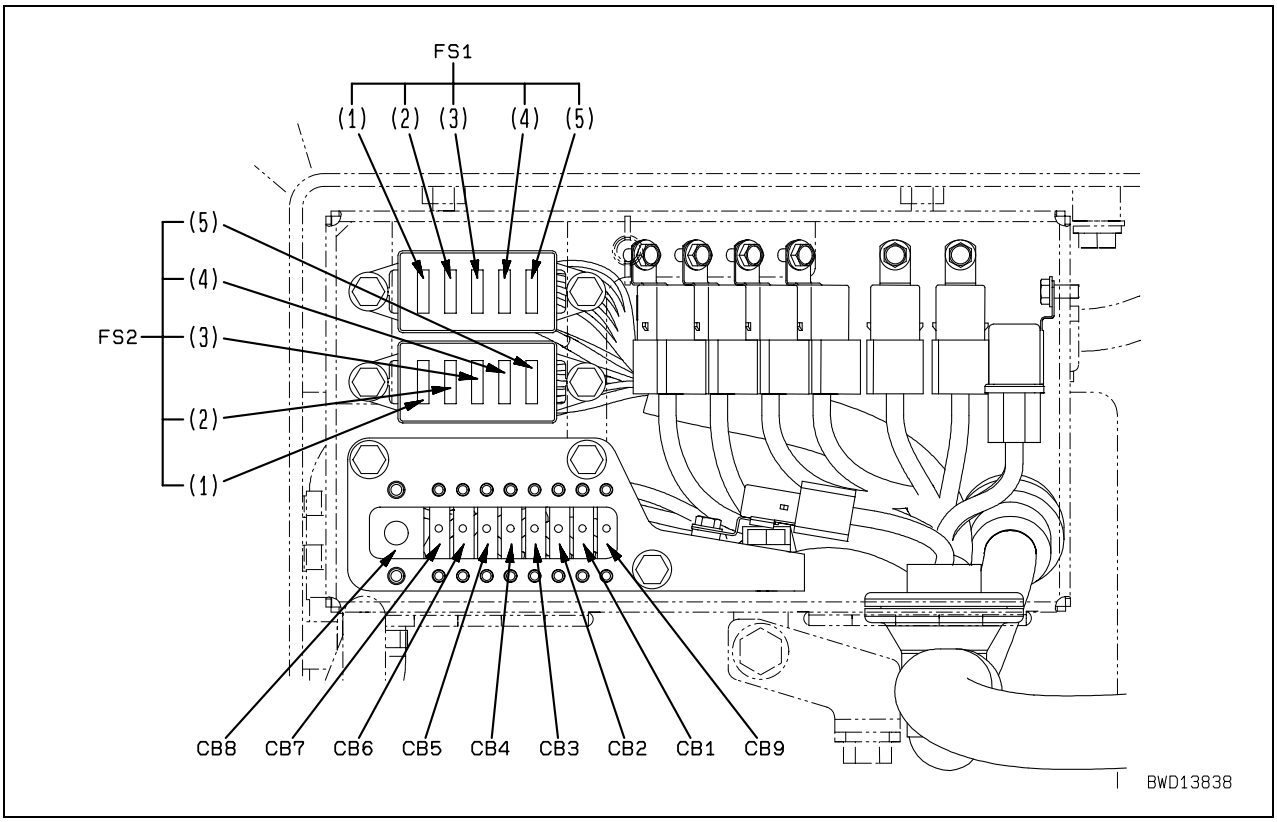

Fuse box Ⅱ

Power circuit fuse (Type of power supply)	Fuse No.	Fuel capacity	Destination of power
FS1-1 (Unswitched power supply)	1	10A	Radio
			12V accessory connector (Via DC converter)
			12V accessory socket (Via DC converter)
FS1-3 (Accessory power supply)	2	20A	Additional light relay, additional light
			Rotary lamp
	3	20A	12V accessory connector (Via DC converter)
			12V accessory socket (Via DC converter)
FS1-4 (Accessory power supply)	4	20A	Radio
			Room lamp
			Cigarette lighter
			Windshield wiper (Via intermittent relay)
	5	10A	Front wiper, rear wiper
	6	10A	Left wiper, right wiper

Location of fuse box Ⅱ (In operator's cab)

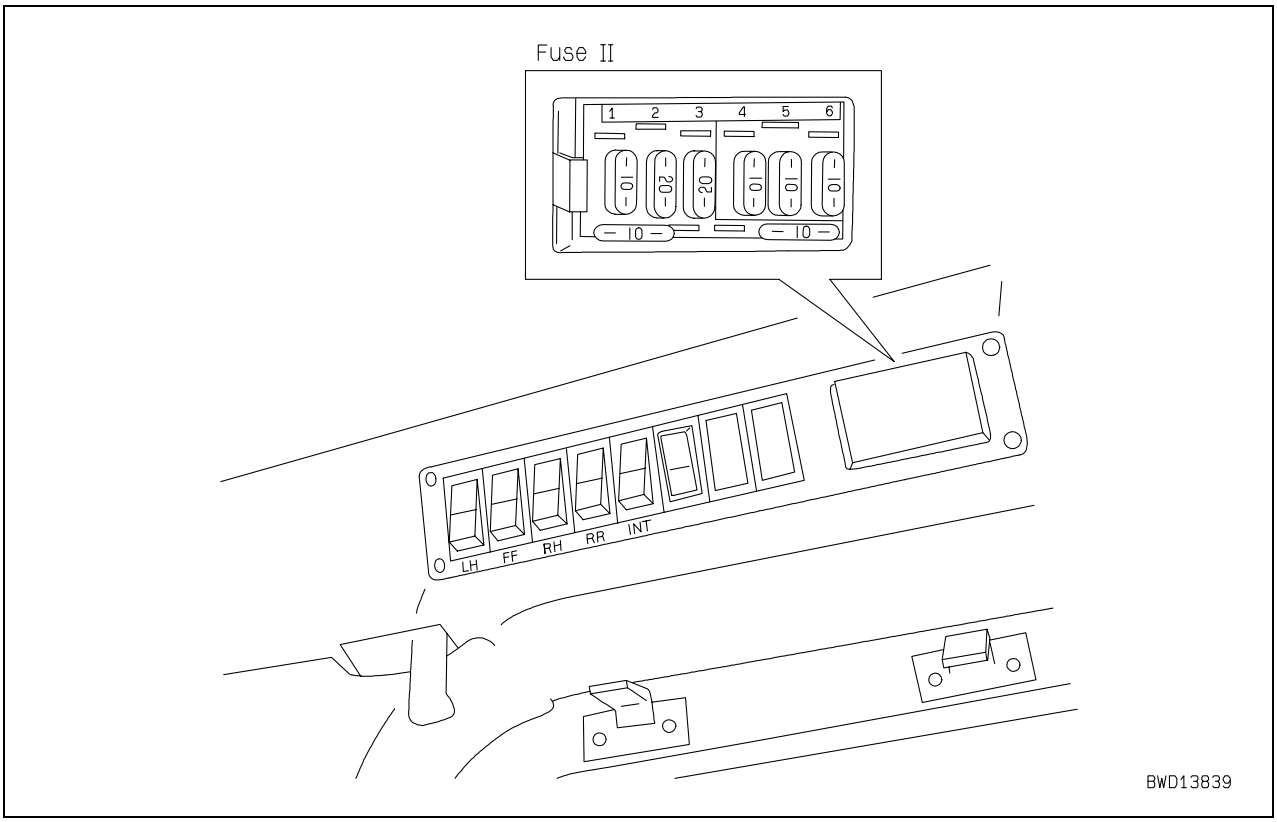

Information in troubleshooting table

★ The following information is summarized in the troubleshooting table and the related electrical circuit diagram. Before carrying out troubleshooting, understand that information fully.

Trouble	**Trouble which occurred in the machine**
Related information	**Information related to detected trouble or troubleshooting**

	Cause		Standard value in normal state/Remarks on troubleshooting
Possible causes and standard value in normal state	1 2 3 4	**Possible causes of trouble (Given numbers are reference numbers, which do not indicate priority)**	**<Contents of description>** **• Standard value in normal state to judge possible causes** **• Remarks on judgment** **<Troubles in wiring harness>** **• Disconnection** **Connector is connected defectively or wiring harness is broken.** **• Ground fault** **Wiring harness which is not connected to chassis ground circuit is in contact with chassis ground circuit.** **• Hot short** **Wiring harness which is not connected to power source (24 V) circuit is in contact with power source (24 V) circuit.** **• Short circuit** **Independent wiring harnesses are in contact with each other abnormally.** **<Precautions for troubleshooting>** **(1) Method of indicating connector No. and handling of T-adapter** **Insert or connect T-adapter as explained below for troubleshooting, unless otherwise specified.** **• If connector No. has no marks of "male" and "female", disconnect connector and insert T-adapters in both male side and female side.** **• If connector No. has marks of "male" and "female", disconnect connector and connect T-adapter to only male side or female side.** **(2) Entry order of pin Nos. and handling of tester leads** **Connect positive (+) lead and negative (–) lead of tester as explained below for troubleshooting, unless otherwise specified.** **• Connect positive (+) lead to pin No. or wiring harness entered on front side.** **• Connect negative (–) lead to pin No. or harness entered on rear side.**

Related circuit diagram

This drawing is a part of the electric circuit diagram related to troubleshooting.
- Connector No.: Indicates (Model – Number of pins) and (Color).
- "Connector No. and pin No." from each branching/merging point: Shows the ends of branch or source of merging within the parts of the same wiring harness.
- Arrow (↔): Roughly shows the location on the machine.

E-1 When starting switch turned ON, machine monitor displays nothing

Trouble	• When starting switch turned ON, machine monitor displays nothing.
Related information	• When starting switch is turned ON, machine monitor displays KOMATSU logo, screen to input password (if set), screen of check before starting, screen to check setting of preset, and ordinary screen in order. • When the engine is started, the battery voltage may lower suddenly, depending on the ambient temperature and the condition of the battery. In this case, the machine monitor goes off for a moment. This phenomenon is not a failure, however.

	Cause		Standard value in normal state/Remarks on troubleshooting			
Possible causes and standard value in normal state	1	Low charge level of battery	★ Prepare with starting switch OFF, then carry out troubleshooting without turning starting switch ON.			
			Battery voltage (2 pieces)		Electrolyte specific gravity (1 piece)	
			Min. 24 V		Min. 1.26	
	2	Defective circuit breaker (CB30, CB6, or CB7)	If circuit breaker is turned OFF, circuit probably has ground fault. (See cause 6.)			
	3	Wrong connection of connector	Machine monitor connector may be connected wrongly. Check it directly (Connection between connectors CM01 and CM02 and between connectors CM03 and CM04).			
	4	Defective starting switch (Internal disconnection)	★ Prepare with starting switch OFF, then turn starting switch ON and carry out troubleshooting.			
			Starting switch		Resistance	
			Between 250 – 270	ON	Max. 1 Ω	
	5	Disconnection in wiring harness (Disconnection in wiring or defective contact in connector)	★ Prepare with starting switch OFF, then carry out troubleshooting without turning starting switch ON.			
			Wiring harness between battery (–) – chassis ground		Resistance	Max. 1 Ω
			Wiring harness between battery (+) – terminal BRB – CB30 (B30L)		Resistance	Max. 1 Ω
			Wiring harness between CB30 (B30S) – CB7 (1)		Resistance	Max. 1 Ω
			Wiring harness between CB7 (2) – CM01 (female) (1), (2)		Resistance	Max. 1 Ω
			Wiring harness between CM01 (female) (3), (4) – chassis ground (GND11)		Resistance	Max. 1 Ω
			Wiring harness between CB30 (B30S) – CB6 (1)		Resistance	Max. 1 Ω
			Wiring harness between CB6 (2) – terminal 250		Resistance	Max. 1 Ω
			Wiring harness between terminal 270 – CM01 (female) (14)		Resistance	Max. 1 Ω

	Cause		Standard value in normal state/Remarks on troubleshooting		
Possible causes and standard value in normal state	6	Ground fault in wiring harness (Contact with GND circuit)	★ Prepare with starting switch OFF, then carry out troubleshooting without turning starting switch ON.		
			Wiring harness between battery (+) – terminal BRB – CB30 (B30L) and chassis ground	Resistance	Min. 1 MΩ
			Wiring harness between CB30 (B30S) – CB7 (1) or circuit branch end and chassis ground	Resistance	Min. 1 MΩ
			Wiring harness between CB7 (2) – CM01 (female) (1), (2) or circuit branch end and chassis ground	Resistance	Min. 1 MΩ
			Wiring harness between CB30 (B30S) – CB6 (1) or circuit branch end and chassis ground	Resistance	Min. 1 MΩ
			Wiring harness between CB6 (2) – terminal 250 or circuit branch end and chassis ground	Resistance	Min. 1 MΩ
			Wiring harness between terminal 270 – CM01 (female) (14) or circuit branch end and chassis ground	Resistance	Min. 1 MΩ
	7	Defective machine monitor	★ Prepare with starting switch OFF, then hold starting switch OFF and ON and carry out troubleshooting in each case.		
			CM01	Starting switch	Voltage
			Between (1), (2) – (3) , (4)	OFF	20 – 30 V
			Between (14) – (3), (4)	ON	20 – 30 V

Circuit diagram related to machine monitor power supply

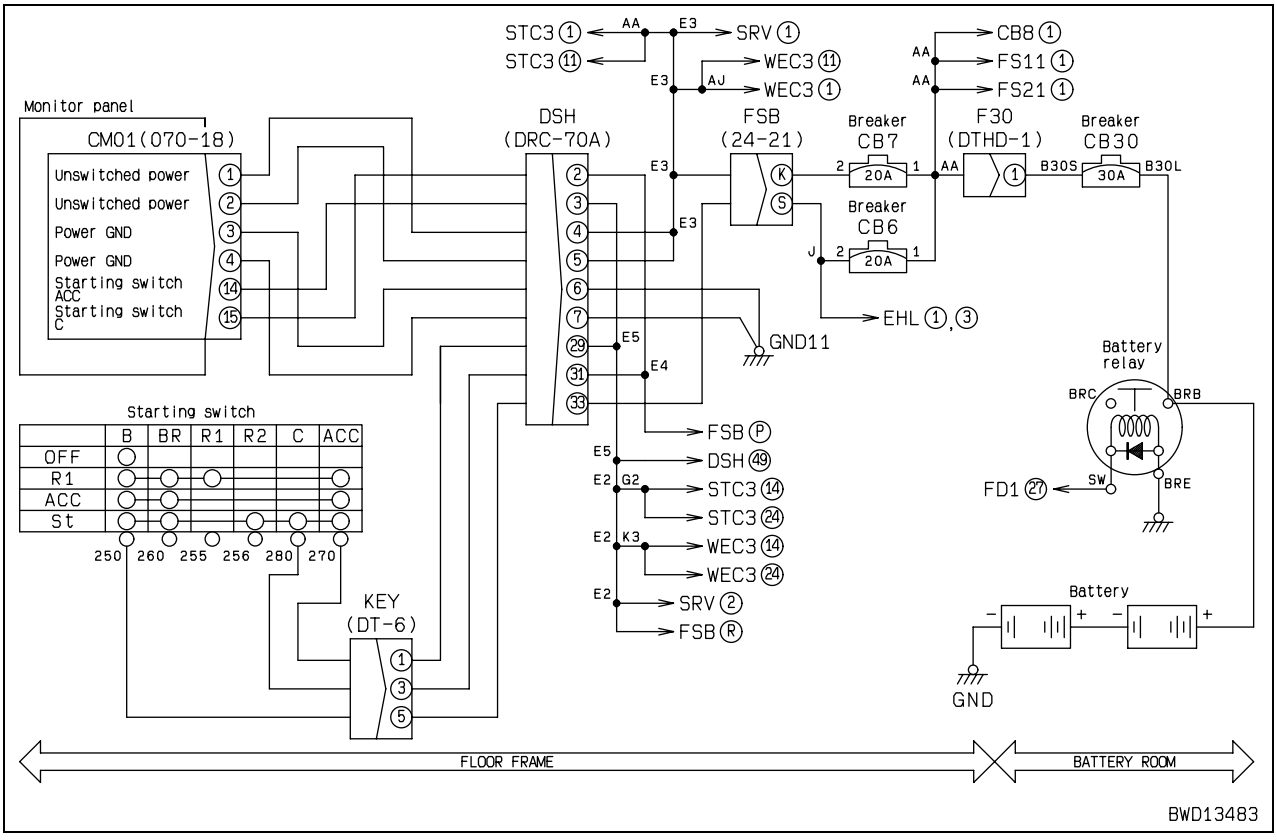

E-2 When starting switch turned ON (before startingengine), basic check item lights up

Trouble	• When starting switch turned ON (before starting engine), basic check item lights up.
Related information	• Basic check item is only lowering of radiator coolant level.

<table>
<tr><td rowspan="10">Possible causes and standard value in normal state</td><td colspan="2">Cause</td><td colspan="4">Standard value in normal state/Remarks on troubleshooting</td></tr>
<tr><td>1</td><td>Lowering of radiator coolant level (When system is normal)</td><td colspan="4">Coolant level in radiator sub tank may be low. Check it and add coolant if necessary.</td></tr>
<tr><td rowspan="3">2</td><td rowspan="3">Defective radiator coolant level switch (Internal disconnection)</td><td colspan="4">★ Prepare with starting switch OFF, then carry out troubleshooting without turning starting switch ON.</td></tr>
<tr><td>WLV (male)</td><td>Sub tank coolant level</td><td colspan="2">Resistance</td></tr>
<tr><td rowspan="2">Between (1) – (2)</td><td>Between FULL – LOW</td><td colspan="2">Max. 1 Ω</td></tr>
<tr><td></td><td>Below LOW</td><td colspan="2">Min. 1 MΩ</td></tr>
<tr><td rowspan="3">3</td><td rowspan="3">Disconnection in wiring harness (Disconnection in wiring or defective contact in connector)</td><td colspan="4">★ Prepare with starting switch OFF, then carry out troubleshooting without turning starting switch ON.</td></tr>
<tr><td colspan="2">Wiring harness between CM02 (female) (3) – WLV (female) (1)</td><td>Resistance</td><td>Max. 1 Ω</td></tr>
<tr><td colspan="2">Wiring harness between CM01 (female) (7), CM02 (female) (7) – WLV (female) (2)</td><td>Resistance</td><td>Max. 1 Ω</td></tr>
<tr><td rowspan="3">4</td><td rowspan="3">Defective machine monitor</td><td colspan="4">★ Prepare with starting switch OFF, then turn starting switch ON and carry out troubleshooting.</td></tr>
<tr><td>CM02</td><td>Sub tank coolant level</td><td colspan="2">Voltage</td></tr>
<tr><td rowspan="2">Between (3) – chassis ground</td><td>Between FULL – LOW</td><td colspan="2">Max. 1 V</td></tr>
<tr><td></td><td>Below LOW</td><td colspan="2">20 – 30 V</td></tr>
</table>

Circuit diagram related to radiator coolant level switch

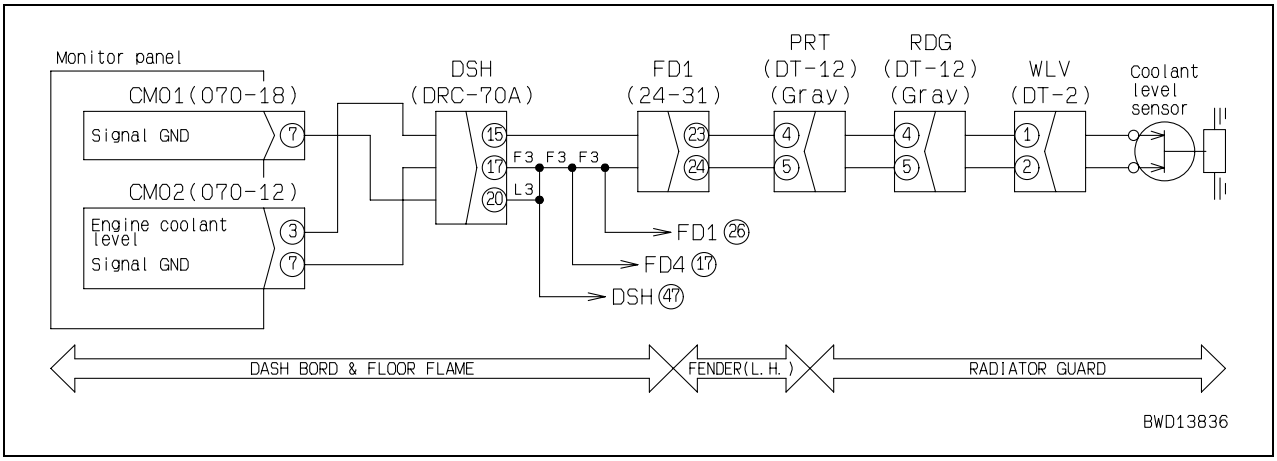

E-3 Engine does not start (Engine does not turn)

Trouble	• Engine does not start (Engine does not turn).
Related information	• Engine starting circuit has following 2 start lock mechanisms. 1) Start lock with password of machine monitor 2) Start lock with parking brake lever and work equipment lock lever

	Cause		Standard value in normal state/Remarks on troubleshooting			
Possible causes and standard value in normal state	1	Low charge level of battery	★ Prepare with starting switch OFF, then carry out troubleshooting without turning starting switch ON.			
			Battery voltage (2 pieces)		Electrolyte specific gravity (1 piece)	
			Min. 24 V		Min. 1.26	
	2	Defective starting switch (Internal disconnection)	★ Prepare with starting switch OFF, then keep starting switch OFF and turn it to START and carry out troubleshooting in each case.			
			Starting switch		Resistance	
			Between 250 – 280	OFF	Min. 1 MΩ	
				START	Max. 1 Ω	
	3	Defective neutral safety relay (Internal trouble)	★ Prepare with starting switch OFF, then turn starting switch to START and carry out troubleshooting.			
			Replace neutral safety relay (Right No.) with another relay. If engine starts at this time, neutral safety relay is defective.		NSF	
	4	Defective starting motor (Internal defect)	★ Prepare with starting switch OFF, then turn starting switch to START and carry out troubleshooting.			
			Starting motor		Voltage	
			Between B – chassis ground	Battery power supply	20 –30 V	
			Between ST (2) – chassis ground	Starting signal	20 –30 V	
			Between ST (2) – chassis ground	Generation signal	Max. 1 V	
			If battery power supply, starting signal, and generation signal are normal but starting motor does not turn, starting motor is defective.			
	5	Defective alternator (Internal short circuit)	★ Prepare with starting switch OFF, then turn starting switch ON and carry out troubleshooting.			
			Alternator		Voltage	
			Between R – chassis ground	Generation signal	Max. 1 V	
	6	Disconnection in wiring harness (Disconnection in wiring or defective contact in connector)	★ Prepare with starting switch OFF, then carry out troubleshooting without turning starting switch ON.			
			Wiring harness between terminal 280 – NSF (female) (3)		Resistance	Max. 1 Ω
			Wiring harness between NSF (female) (5) – PRE – ST (female) (1)		Resistance	Max. 1 Ω
	7	Ground fault in wiring harness (Contact with GND circuit)	★ Prepare with starting switch OFF, then carry out troubleshooting without turning starting switch ON.			
			Wiring harness between terminal 280 – NSF (female) (3) or circuit branch end and chassis ground		Resistance	Min. 1 MΩ
			Wiring harness between NSF (female) (5) – PRE – ST (female) (1) and chassis ground		Resistance	Min. 1 MΩ
	8	Hot short (Short circuit with 24V circuit) in wiring harness	★ Prepare with starting switch OFF, then turn starting switch ON and carry out troubleshooting.			
			Wiring harness between terminal R – ST (female) (2) or circuit branch end and chassis ground		Voltage	Max. 1 V

Circuit diagram related to preheating/starting of engine and charge of battery

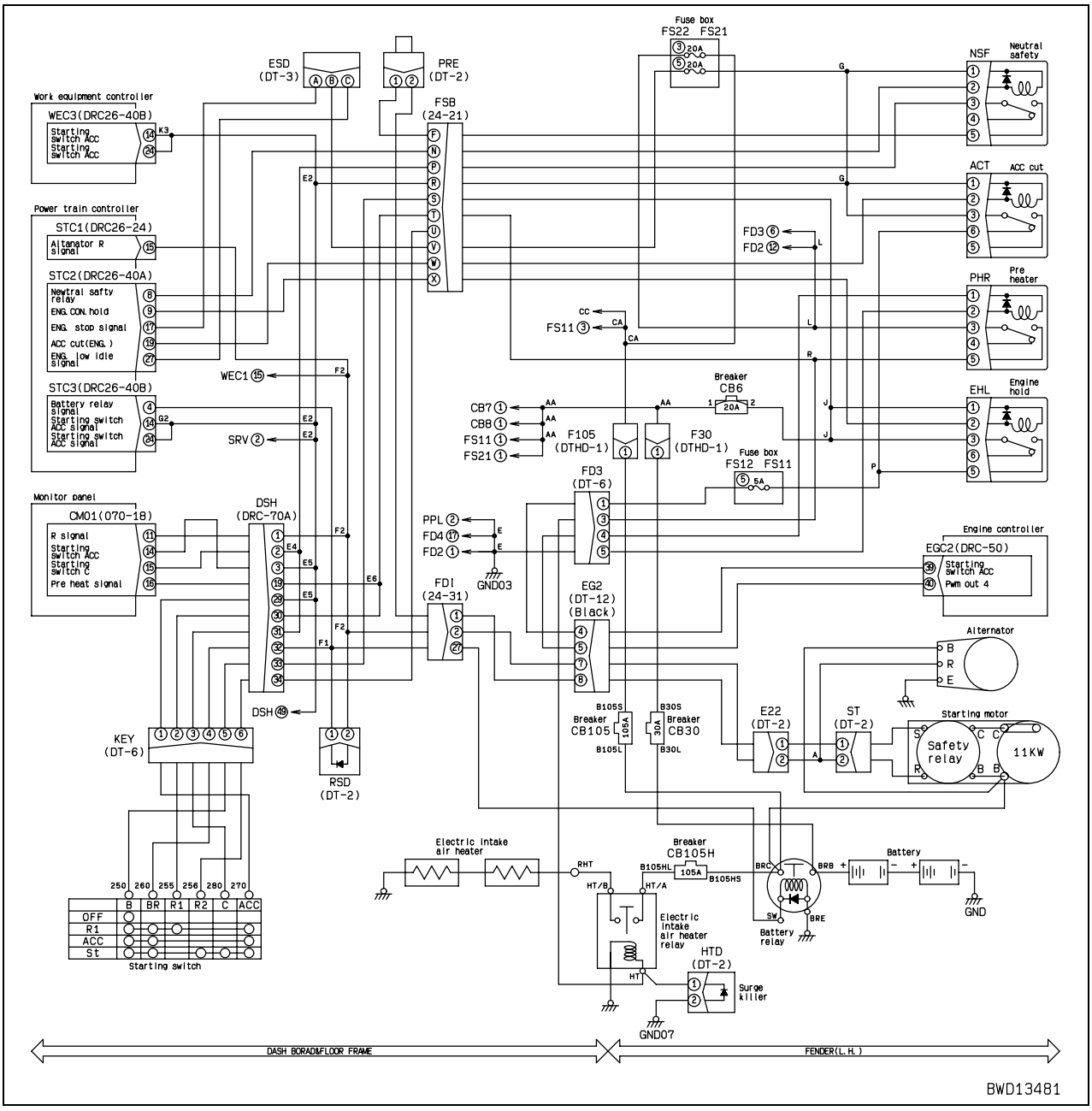

E-4 Preheater does not operate

Trouble	(1) When starting switch is turned to HEAT position, preheating monitor does not light up.
Related information	• Preheater monitor lights up when starting switch is turned to HEAT. • If engine coolant temperature is below -5 °C, automatic warm-up system operates and preheating monitor lights up for up to 40 seconds.

<table>
<tr><td rowspan="11">Possible causes and standard value in normal state</td><td colspan="2">Cause</td><td colspan="4">Standard value in normal state/Remarks on troubleshooting</td></tr>
<tr><td rowspan="3">1</td><td rowspan="3">Defective starting switch (Internal disconnection)</td><td colspan="4">★ Prepare with starting switch OFF, then keep starting switch OFF and turn it to HEAT and carry out troubleshooting in each case.</td></tr>
<tr><td colspan="2">Starting switch</td><td colspan="2">Resistance</td></tr>
<tr><td rowspan="2">Between 250 – 255</td><td>OFF</td><td colspan="2">Min. 1 MΩ</td></tr>
<tr><td>HEAT</td><td colspan="2">Max. 1 Ω</td></tr>
<tr><td rowspan="2">2</td><td rowspan="2">Disconnection in wiring harness (Disconnection in wiring or defective contact in connector)</td><td colspan="4">★ Prepare with starting switch OFF, then carry out troubleshooting without turning starting switch ON.</td></tr>
<tr><td colspan="2">Wiring harness between CM01 (female) (16) – terminal 255</td><td>Resistance</td><td>Max. 1 Ω</td></tr>
<tr><td rowspan="4">3</td><td rowspan="4">Defective machine monitor</td><td colspan="4">★ Prepare with starting switch OFF, then keep starting switch OFF and turn it to HEAT and carry out troubleshooting in each case.</td></tr>
<tr><td>CM01</td><td>Starting switch</td><td colspan="2">Voltage</td></tr>
<tr><td rowspan="2">Between (16) – chassis ground</td><td>OFF</td><td colspan="2">Max. 1 V</td></tr>
<tr><td>HEAT</td><td colspan="2">20 – 30 V</td></tr>
</table>

Trouble	(2) When starting switch is turned to HEAT position, intake air heater mounting part does not become warm.
Related information	• Check that engine can be turned with starting motor (If engine cannot be turned, carry out troubleshooting for E-3 Engine does not start (Engine does not turn)).

<table>
<tr><td rowspan="15">Possible causes and standard value in normal state</td><td colspan="2">Cause</td><td colspan="5">Standard value in normal state/Remarks on troubleshooting</td></tr>
<tr><td>1</td><td>Defective circuit breaker (CB105H)</td><td colspan="5">If circuit breaker is turned OFF, circuit probably has ground fault (See cause 5).</td></tr>
<tr><td rowspan="3">2</td><td rowspan="3">Defective heater relay (Internal disconnection)</td><td colspan="5">★ Prepare with starting switch OFF (with wiring harness connected), then turn starting switch to HEAT and carry out troubleshooting.</td></tr>
<tr><td>Heater relay</td><td colspan="2">Starting switch</td><td colspan="2">Voltage</td></tr>
<tr><td>Between HT – chassis ground</td><td colspan="2" rowspan="2">HEAT</td><td colspan="2">20 – 30 V</td></tr>
<tr><td>Between HT/B – chassis ground</td><td colspan="2">20 – 30 V</td></tr>
<tr><td rowspan="3">3</td><td rowspan="3">Defective intake air heater (Internal disconnection)</td><td colspan="5">★ Prepare with starting switch OFF (with wiring harness connected), then turn starting switch to HEAT and carry out troubleshooting in each case.</td></tr>
<tr><td>RH1</td><td colspan="2">Starting switc</td><td colspan="2">Voltage</td></tr>
<tr><td>Between terminal – chassis ground</td><td colspan="2">HEAT</td><td colspan="2">20 – 30 V</td></tr>
<tr><td colspan="6">If voltage is normal but heater mounting part does not become warm, intake air heater is defective.</td></tr>
<tr><td rowspan="4">4</td><td rowspan="4">Disconnection in wiring harness (Disconnection in wiring or defective contact in connector)</td><td colspan="5">★ Prepare with starting switch OFF, then carry out troubleshooting without turning starting switch ON.</td></tr>
<tr><td colspan="3">Wiring harness between terminal 255 – terminal HT</td><td>Resistance</td><td>Max. 1 Ω</td></tr>
<tr><td colspan="3">Wiring harness between terminal BRC – CB105H (B105HS)</td><td>Resistance</td><td>Max. 1 Ω</td></tr>
<tr><td colspan="3">Wiring harness between CB105H (B105HL) – terminal HT/A</td><td>Resistance</td><td>Max. 1 Ω</td></tr>
<tr><td rowspan="4">5</td><td rowspan="4">Ground fault in wiring harness (Contact with GND circuit)</td><td colspan="5">★ Prepare with starting switch OFF, then carry out troubleshooting without turning starting switch ON.</td></tr>
<tr><td colspan="3">Wiring harness between terminal 255 – terminal HT or CM01 (female) (16) or circuit branch end and chassis ground</td><td>Resistance</td><td>Min. 1 MΩ</td></tr>
<tr><td colspan="3">Wiring harness between terminal BRC – CB105H (B105HS) and chassis ground</td><td>Resistance</td><td>Min. 1 MΩ</td></tr>
<tr><td colspan="3">Wiring harness between CB105H (B105HL) – terminal HT/A and chassis ground</td><td>Resistance</td><td>Min. 1 MΩ</td></tr>
<tr><td colspan="3">Wiring harness between terminal HT/B – terminal RHT and chassis ground</td><td>Resistance</td><td>Min. 1 MΩ</td></tr>
</table>

Circuit diagram related to preheating/starting of engine and charge of battery

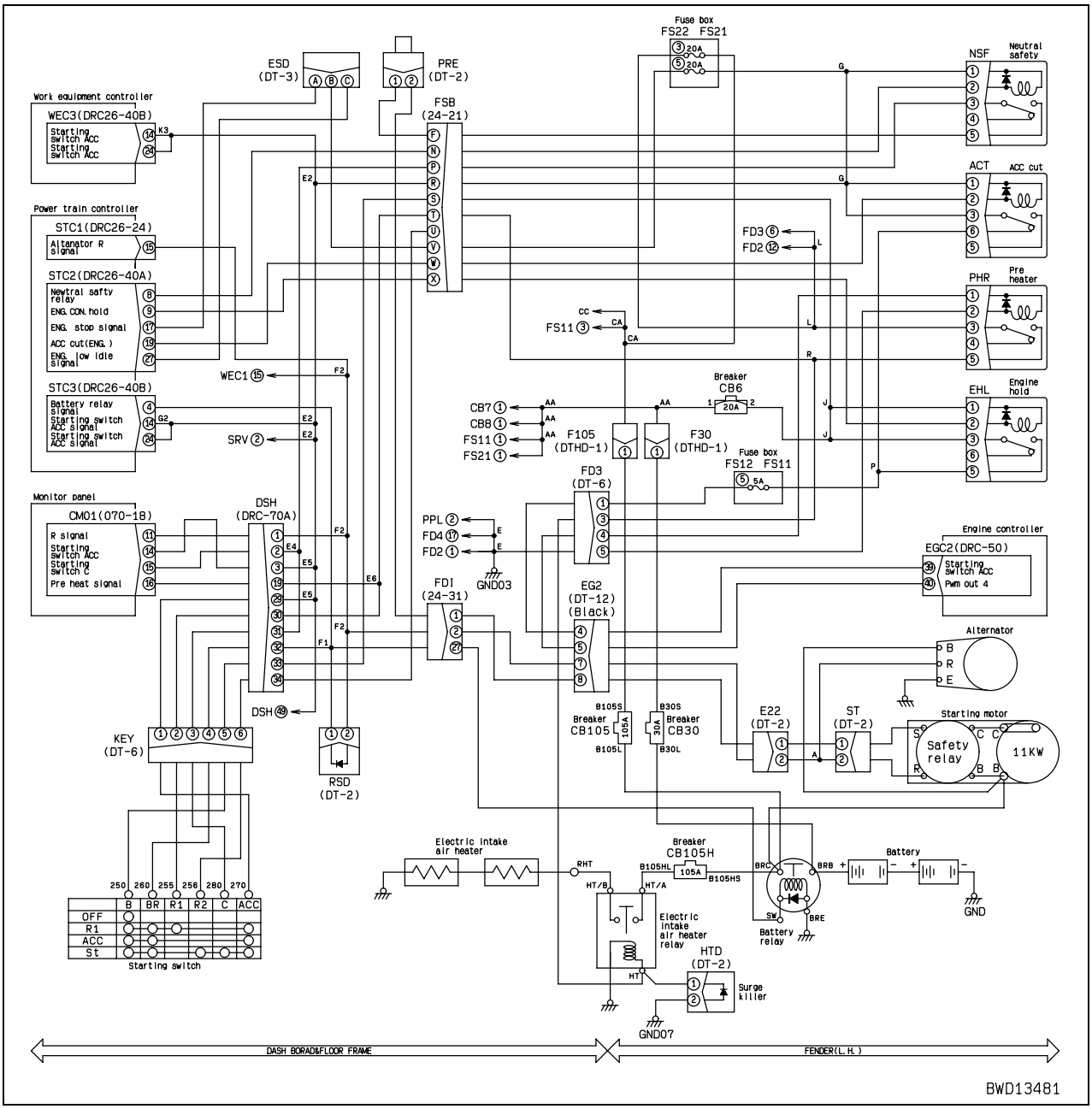

E-5 Precaution item lights up while engine is running

Trouble	• Precaution item lights up while engine is running.
Related information	• Check item is only charge level monitor. • State of generation signal of alternator can be checked with monitoring function. (Code: 04300 Battery Charge Volt)

<table>
<tr><td rowspan="11">Possible causes and standard value in normal state</td><td colspan="2">Cause</td><td colspan="4">Standard value in normal state/Remarks on troubleshooting</td></tr>
<tr><td rowspan="3">1</td><td rowspan="3">Defective generation by alternator (when system is normal)</td><td colspan="4">★ Prepare with starting switch OFF, then start engine and carry out troubleshooting.</td></tr>
<tr><td>Alternator</td><td>Engine speed</td><td colspan="2">Voltage</td></tr>
<tr><td>Between R – chassis ground</td><td>Medium or higher</td><td colspan="2">20 – 30 V</td></tr>
<tr><td rowspan="2">2</td><td rowspan="2">Disconnection in wiring harness (Disconnection in wiring or defective contact in connector)</td><td colspan="4">★ Prepare with starting switch OFF, then carry out troubleshooting without turning starting switch ON.</td></tr>
<tr><td colspan="2">Wiring harness between CM01 (female) (11) – terminal R</td><td>Resistance</td><td>Max. 1 Ω</td></tr>
<tr><td rowspan="2">3</td><td rowspan="2">Ground fault in wiring harness (Contact with GND circuit)</td><td colspan="4">★ Prepare with starting switch OFF, then carry out troubleshooting without turning starting switch ON.</td></tr>
<tr><td colspan="2">Wiring harness between CM01 (female) (11) – terminal R or circuit branch end and chassis ground</td><td>Resistance</td><td>Min. 1 MΩ</td></tr>
<tr><td rowspan="3">4</td><td rowspan="3">Defective machine monitor</td><td colspan="4">★ Prepare with starting switch OFF, then start engine and carry out troubleshooting.</td></tr>
<tr><td>CM01</td><td>Engine</td><td colspan="2">Voltage</td></tr>
<tr><td>Between (11) – chassis ground</td><td>Medium or higher</td><td colspan="2">20 – 30 V</td></tr>
</table>

Circuit diagram related to preheating/starting of engine and charge of battery

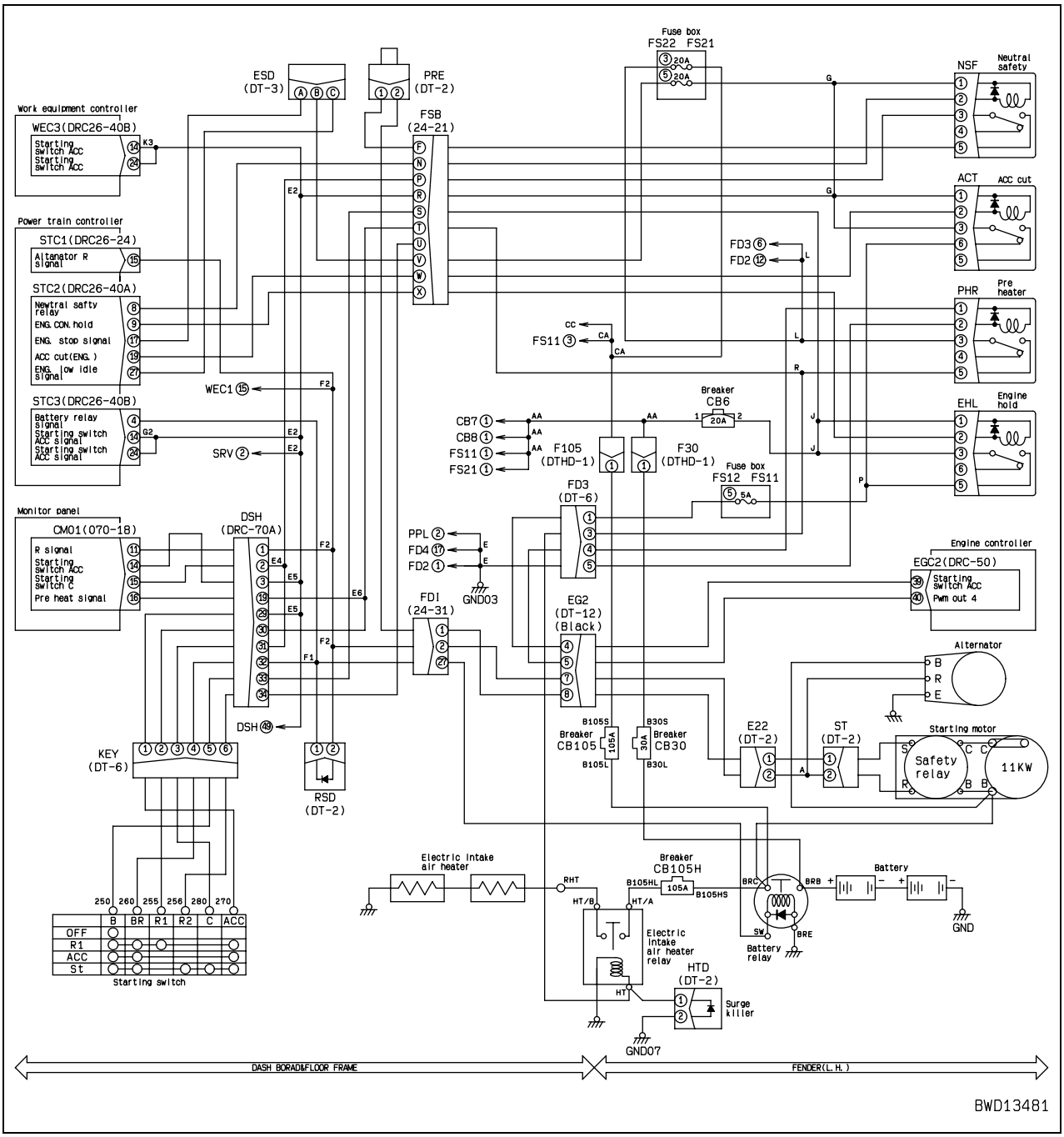

E-6 Emergency stop item lights up while engine is running

Trouble	(1) Engine coolant temperature monitor lights up.
Related information	• Signals of engine coolant temperature sensor are input to engine controller and then transmitted to machine monitor through communication system. • Engine coolant temperature can be checked with monitoring function. (Code: 04107 Coolant Temperature)

		Cause	Standard value in normal state/Remarks on troubleshooting
Possible causes and standard value in normal state	1	Overheating of engine coolant (when system is normal)	Engine coolant may be overheated. If it is overheated, remove cause.
	2	Defective engine coolant temperature sensor system	If cause 1 is not detected, engine coolant temperature sensor system may be defective. Carry out troubleshooting for failure codes [**CA144**] and [**CA145**].
	3	Defective machine monitor	If causes 1 and 2 are not detected, machine monitor may be defective. (Since trouble is in system, troubleshooting cannot be carried out.)

Trouble	(2) Engine oil pressure monitor lights up.
Related information	• Signals of engine oil pressure sensor are input to engine controller and then transmitted to machine monitor through communication system. • Engine oil pressure can be checked with monitoring function. (Code: 37200 Engine Oil Pressure)

		Cause	Standard value in normal state/Remarks on troubleshooting
Possible causes and standard value in normal state	1	Lowering of engine oil pressure (when system is normal)	Engine oil pressure may be low. If it is low, remove cause.
	2	Defective engine oil pressure sensor system	If cause 1 is not detected, engine oil pressure sensor system may be defective. Carry out troubleshooting for failure codes [**CA135**] and [**CA141**].
	3	Defective machine monitor	If causes 1 and 2 are not detected, machine monitor may be defective. (Since trouble is in system, troubleshooting cannot be carried out.)

Trouble	(3) Power train oil temperature monitor lights up.
Related information	• Signals of torque converter oil temperature sensor are input to power train controller and then transmitted to machine monitor through communication system. • Power train oil temperature can be checked with monitoring function. (Code: 30100 T/C Oil Temperature)

		Cause	Standard value in normal state/Remarks on troubleshooting
Possible causes and standard value in normal state	1	Overheating of power train oil (when system is normal)	Power train oil may be overheated. If it is overheated, remove cause.
	2	Defective power train oil temperature sensor system	If cause 1 is not detected, power train oil temperature sensor system may be defective. Carry out troubleshooting for failure codes [**DGT1KA**] and [**DGT1KX**].
	3	Defective machine monitor	If causes 1 and 2 are not detected, machine monitor may be defective. (Since trouble is in system, troubleshooting cannot be carried out.)

Trouble	(4) Hydraulic oil temperature monitor lights up.
Related information	• Hydraulic oil temperature can be checked with monitoring function. (Code: 04401 Hyd Oil Temperature)

		Cause	Standard value in normal state/Remarks on troubleshooting
Possible causes and standard value in normal state	1	Overheating of hydraulic oil (when system is normal)	Hydraulic oil may be overheated. If it is overheated, remove cause.
	2	Defective hydraulic oil temperature gauge system	If cause 1 is not detected, hydraulic oil temperature gauge system may be defective. Carry out troubleshooting for E-10 Hydraulic oil temperature gauge (Multi-gauge) does not display normally.

E-7 Engine coolant temperature gauge does not indicate normally

Trouble	(1) While engine coolant temperature is rising normally, temperature gauge does not rise from white range (C). (2) While engine coolant temperature is stabilized normally, temperature gauge rises to red range (H).
Related information	• Signals of engine coolant temperature sensor are input to engine controller and then transmitted to machine monitor through communication system. • Engine coolant temperature can be checked with monitoring function. (Code: 04107 Coolant Temperature)

		Cause	Standard value in normal state/Remarks on troubleshooting
Possible causes and standard value in normal state	1	Defective engine coolant temperature sensor system	Engine coolant temperature sensor system may be defective. Carry out troubleshooting for failure codes [**CA144**] and [**CA145**].
	2	Defective machine monitor	If cause 1 is not detected, machine monitor may be defective. (Since trouble is in system, troubleshooting cannot be carried out.)

Trouble	(3) Display of coolant temperature gauge is different from actual engine coolant temperature. (4) Display of engine coolant temperature gauge is different from display of engine coolant temperature monitor.
Related information	• Signals of engine coolant temperature sensor are input to engine controller and then transmitted to machine monitor through communication system. • Engine coolant temperature can be checked with monitoring function. (Code: 04107 Coolant Temperature)

	Cause		Standard value in normal state/Remarks on troubleshooting		
Possible causes and standard value in normal state	1	Defective machine monitor	★ Turn starting switch ON or start engine and carry out troubleshooting.		
			Engine coolant temperature	Coolant temperature gauge level	Color of monitor light (a)
			105 °C	6	Red
			102 °C	5	
			100 °C	4	Blue
			85 °C	3	
			60 °C	2	
			30 °C	1	White

Engine coolant temperature gauge and coolant temperature monitor

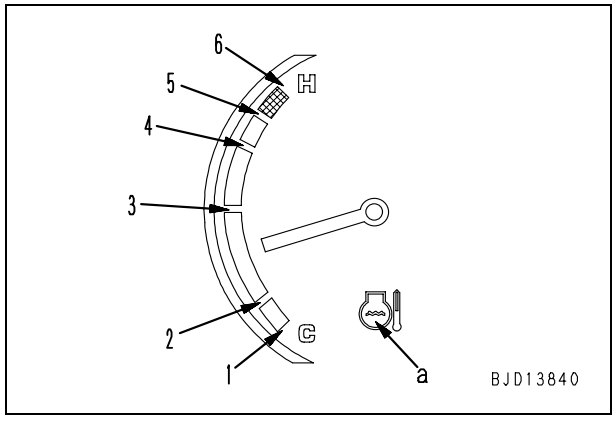

E-8 Fuel level gauge does not indicate normally

Trouble	(1) While fuel is added, fuel level gauge does not rise from red range (E). (2) While fuel level is low, fuel level gauge does not lower from green range top (F)
Related nformation	• Signal voltage of fuel level sensor can be checked with monitoring function. (Code: 04200 Fuel Level Sensor Volt)

<table>
<tr><td rowspan="11">Possible causes and standard value in normal state</td><td colspan="2">Cause</td><td colspan="4">Standard value in normal state/Remarks on troubleshooting</td></tr>
<tr><td rowspan="3">1</td><td rowspan="3">Defective fuel level sensor (Internal disconnection or short circuit)</td><td colspan="4">★ Prepare with starting switch OFF, then carry out troubleshooting without turning starting switch ON.</td></tr>
<tr><td>FLV (male)</td><td>Fuel level</td><td colspan="2">Resistance</td></tr>
<tr><td>Between (1) – (2)</td><td>FULL</td><td colspan="2">Approx. 4 Ω</td></tr>
<tr><td></td><td></td><td>EMPTY</td><td colspan="2">Approx. 85 Ω</td></tr>
<tr><td rowspan="3">2</td><td rowspan="3">Disconnection in wiring harness (Disconnection in wiring or defective contact in connector)</td><td colspan="4">★ Prepare with starting switch OFF, then carry out troubleshooting without turning starting switch ON.</td></tr>
<tr><td colspan="2">Wiring harness between CM01 (female) (9) – FLV (female) (1)</td><td>Resistance</td><td>Max. 1 Ω</td></tr>
<tr><td colspan="2">Wiring harness between CM01 (female) (12) – FLV (female) (2)</td><td>Resistance</td><td>Max. 1 Ω</td></tr>
<tr><td rowspan="2">3</td><td rowspan="2">Ground fault in wiring harness (Contact with GND circuit)</td><td colspan="4">★ Prepare with starting switch OFF, then carry out troubleshooting without turning starting switch ON.</td></tr>
<tr><td colspan="2">Wiring harness between CM01 (female) (9) – FLV (female) (1) and chassis ground</td><td>Resistance</td><td>Min. 1 MΩ</td></tr>
<tr><td rowspan="2">4</td><td rowspan="2">Hot short (Short circuit with 24V circuit) in wiring harness</td><td colspan="4">★ Prepare with starting switch OFF, then turn starting switch ON and carry out troubleshooting.</td></tr>
<tr><td colspan="2">Wiring harness between CM01 (female) (9) – FLV (female) (1) and chassis ground</td><td>Voltage</td><td>Max. 1 V</td></tr>
<tr><td>5</td><td>Defective machine monitor</td><td colspan="4">If causes 1 – 4 are not detected, machine monitor may be defective. (Since trouble is in system, troubleshooting cannot be carried out.)</td></tr>
</table>

Circuit diagram related to fuel level sensor

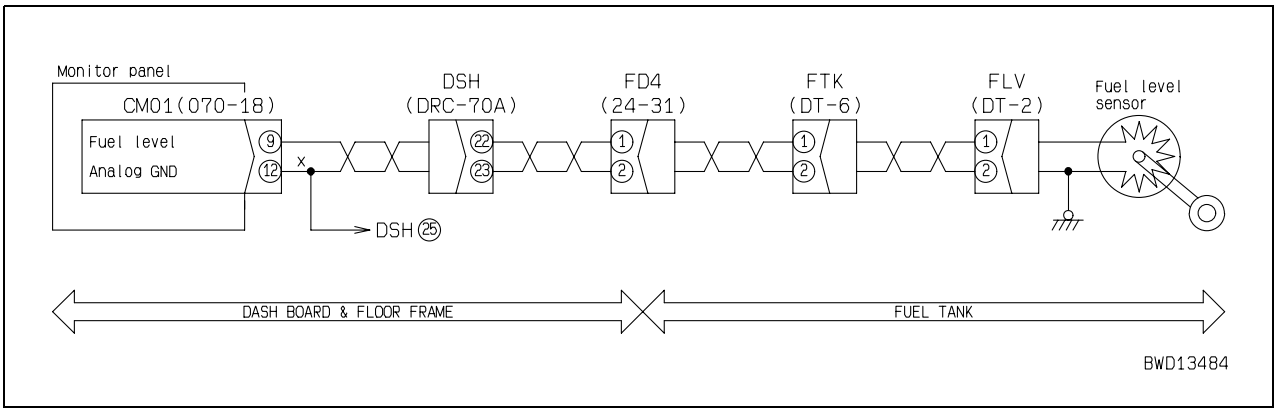

Trouble	(3) Display of fuel level gauge is different from actual fuel level. (4) Display of fuel level gauge is different from display of fuel level monitor.
Related information	• Signal voltage of fuel level sensor can be checked with monitoring function. (Code: 04200 Fuel Level Sensor Volt)

Possible causes and standard value in normal state	Cause		Standard value in normal state/Remarks on troubleshooting		
			★ Turn starting switch ON or start engine and carry out trouble-shooting.		
			Quantity of fuel	Reading of fuel level gauge	Color of monitor light (a)
	1	Defective machine monitor	565 ℓ	6	Blue
			425 ℓ	5	
			310 ℓ	4	
			220 ℓ	3	
			150 ℓ	2	
			75 ℓ	1	Red

Fuel level gauge and fuel level monitor

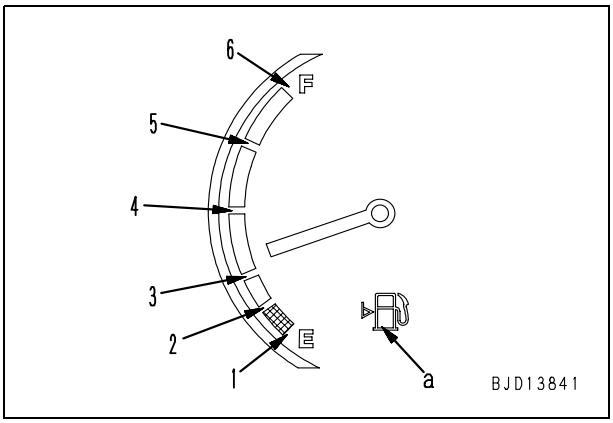

E-9 Power train oil temperature gauge (multi-gauge) does not indicate normally

Trouble	(1) While power train oil temperature is rising normally, temperature gauge does not rise from white range (C). (2) While power train oil temperature is stabilized normally, temperature gauge rises to red range (H).
Related information	• Signals of power train oil temperature sensor are input to power train controller and then transmitted to machine monitor through communication system. • Power train oil temperature can be checked with monitoring function. (Code: 30100 T/C Oil Temperature)

	Cause		Standard value in normal state/Remarks on troubleshooting
Possible causes and standard value in normal state	1	Defective power train oil temperature sensor system	Power train oil temperature sensor system may be defective. Carry out troubleshooting for failure codes [**DGT1KA**] and [**DGT1KX**].
	2	Defective machine monitor	If cause 1 is not detected, machine monitor may be defective. (Since trouble is in system, troubleshooting cannot be carried out.)

Trouble	(3) Display of power train temperature gauge is different from actual power train oil temperature. (4) Display of power train oil temperature gauge is different from display of power train oil temperature monitor.
Related information	• Signals of power train oil temperature sensor are input to power train controller and then transmitted to machine monitor through communication system. • Power train oil temperature can be checked with monitoring function. (Code: 30100 T/C Oil Temperature)

	Cause		Standard value in normal state/Remarks on troubleshooting		
Possible causes and standard value in normal state	1	Defective machine monitor	★ Turn starting switch ON or start engine and carry out troubleshooting.		
			Power train oil temperature	Power train oil temperature gauge level	Color of monitor light (a)
			130 °C	6	Red
			120 °C	5	
			118 °C	4	Blue
			80 °C	3	
			50 °C	2	
			0 °C	1	White

Power train oil temperature gauge and power train oil temperature monitor

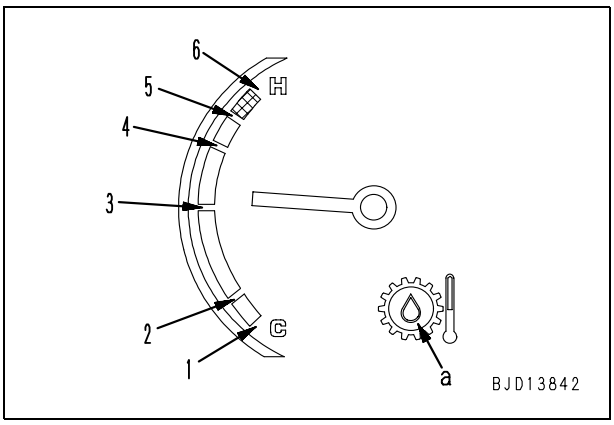

E-10 Hydraulic temperature gauge (multi-gauge) does not indicate normally

Trouble	(1) While hydraulic oil temperature is rising normally, temperature gauge does not rise from white range (C). (2) While hydraulic oil temperature is stabilized normally, temperature gauge rises to red range (H).
Related information	• Hydraulic temperature can be checked with monitoring function. (Code: 04401 Hyd Oil Temperature)

	Cause		Standard value in normal state/Remarks on troubleshooting			
Possible causes and standard value in normal state	1	Defective hydraulic oil temperature sensor system (Internal disconnection or short circuit)	★ Prepare with starting switch OFF, then carry out troubleshooting without turning starting switch ON.			
			HDT (male)	Resistance		
			Between (1) – (2)	3.5 – 90 kΩ		
			Between (2) – chassis ground	Min. 1 MΩ		
	2	Disconnection in wiring harness (Disconnection in wiring or defective contact in connector)	★ Prepare with starting switch OFF, then carry out troubleshooting without turning starting switch ON.			
			Wiring harness between CM01 (female) (8) – HDT (female) (1)	Resistance	Max. 1 Ω	
			Wiring harness between CM01 (female) (12) – HDT (female) (2)	Resistance	Max. 1 Ω	
	3	Ground fault in wiring harness (Contact with GND circuit)	★ Prepare with starting switch OFF, then carry out troubleshooting without turning starting switch ON.			
			Wiring harness between CM01 (female) (8) – HDT (female) (1) and chassis ground	Resistance	Min. 1 MΩ	
	4	Hot short (Short circuit with 24V circuit) in wiring harness	★ Prepare with starting switch OFF, then turn starting switch ON and carry out troubleshooting.			
			Wiring harness between CM01 (female) (8) – HDT (female) (1) and chassis ground	Voltage	Max. 1 V	
	5	Defective machine monitor	If causes 1 – 4 are not detected, machine monitor may be defective. (Since trouble is in system, troubleshooting cannot be carried out.)			

Circuit diagram related to hydraulic oil temperature sensor

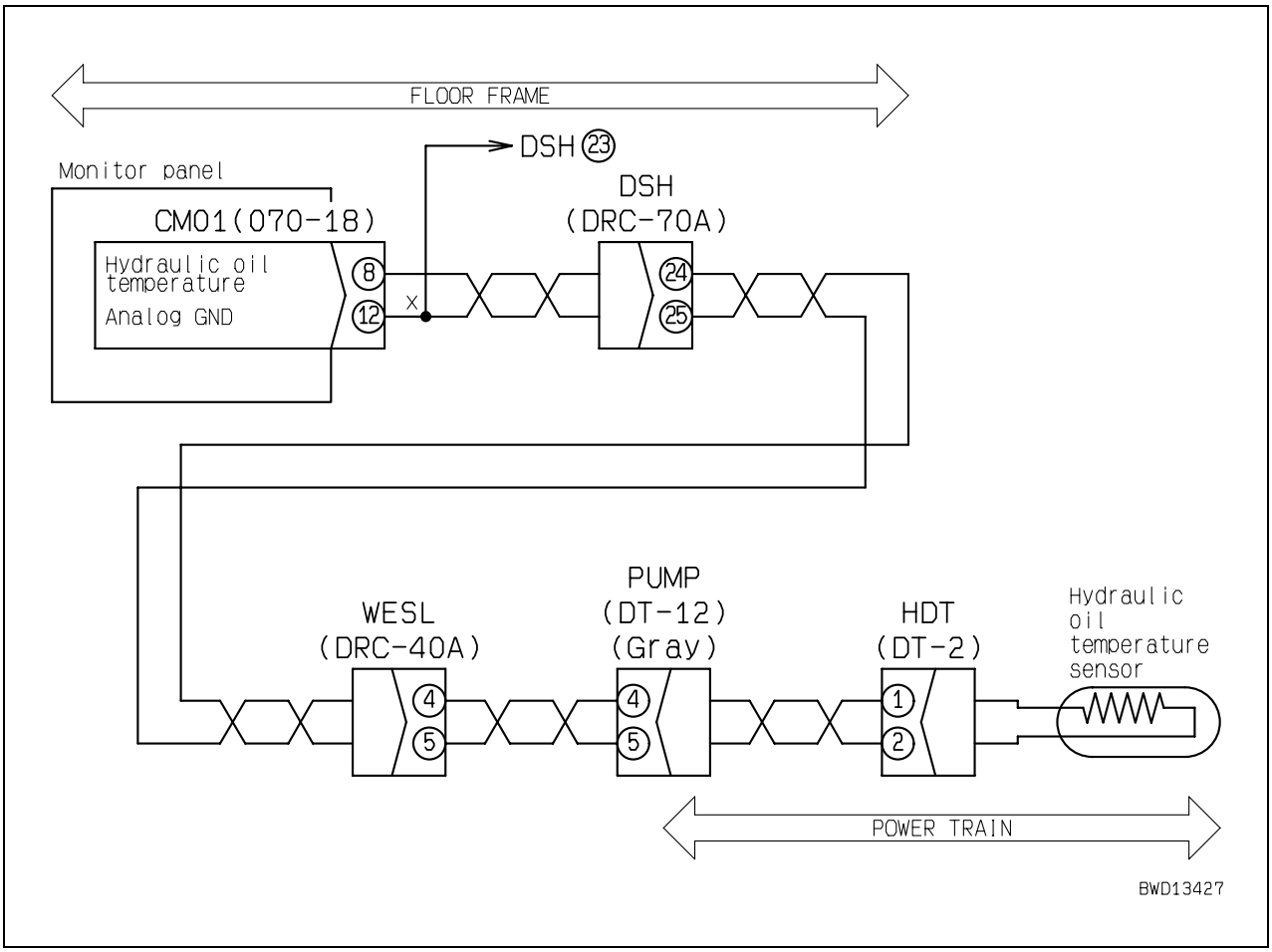

Trouble	(3) Display of hydraulic oil temperature gauge is different from actual hydraulic oil temperature. (4) Display of hydraulic oil temperature gauge is different from display of hydraulic oil temperature monitor.
Related information	• Hydraulic oil temperature can be checked with monitoring function. (Code: 04401 Hyd Oil Temperature)

Possible causes and standard value in normal state	Cause		Standard value in normal state/Remarks on troubleshooting		
			★ Turn starting switch ON or start engine and carry out trouble-shooting.		
			Hydraulic oil temperature	Reading of hydraulic oil temperature gauge	Color of monitor light (a)
	1	Defective machine monitor	110 °C	6	Red
			100 °C	5	
			98 °C	4	Blue
			70 °C	3	
			20 °C	2	
			0 °C	1	White

Hydraulic oil temperature gauge and hydraulic oil temperature monitor

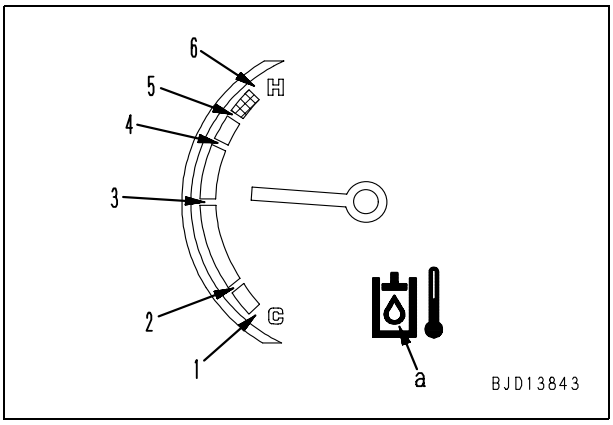

E-11 Contents of display by machine monitor are different from applicable machine

Trouble	• Contents of display by machine monitor are different from applicable machine.
Related information	

Possible causes and standard value in normal state	Cause		Standard value in normal state/Remarks on troubleshooting
	1	Defective machine monitor	Machine monitor may be defective. (Since trouble is in system, troubleshooting cannot be carried out.)

E-12 Machine monitor does not display some items

Trouble	• Machine monitor does not display some items.
Related information	• The LCD panel sometimes has black points (points which are not lighted) and bright points (points which do not go off) for the reason of its characteristics. If the number of the bright points and black points does not exceed 10, those points are not a failure or a defect.

Possible causes and standard value in normal state	Cause		Standard value in normal state/Remarks on troubleshooting
	1	Defective machine monitor (LCD panel)	★ Turn starting switch ON and carry out troubleshooting.
			When following switches are operated, if all LCD panel is lighted up (all surface becomes white), LCD panel is normal. • Operation of switches: [4] + [F2] (Press simultaneously)
	2	Defective machine monitor (body)	If cause 1 is not detected, machine monitor may be defective. (Since trouble is in system, troubleshooting cannot be carried out.)

E-13 Function switch does not work

Trouble	• Function switch does not work.
Related information	

Possible causes and standard value in normal state	Cause		Standard value in normal state/Remarks on troubleshooting
	1	Defective machine monitor	Machine monitor may be defective. (Since trouble is in system, troubleshooting cannot be carried out.)

E-14 Operation mode does not change

Trouble	(1) When operation mode switch is operated, display of operation mode monitor does not change.
Related information	

Possible causes and standard value in normal state	Cause		Standard value in normal state/Remarks on troubleshooting
	1	Defective machine monitor	Machine monitor may be defective. (Since trouble is in system, troubleshooting cannot be carried out.)

Trouble	(2) When operation mode is changed, engine output is not changed.
Related information	• Engine output mode recognized by engine controller can be checked with monitoring function. (Code: 17500 Engine Power Mode)

Possible causes and standard value in normal state	Cause		Standard value in normal state/Remarks on troubleshooting
	1	Defective machine monitor	Machine monitor may be defective. (Since trouble is in system, troubleshooting cannot be carried out.)
	2	Defective engine controller	Engine controller may be defective. (Since trouble is in system, troubleshooting cannot be carried out.)

E-15 Gearshift mode does not change

Trouble	(1) When gearshift mode switch is operated, display of speed mode section does not change.
Related information	

Possible causes and standard value in normal state	Cause		Standard value in normal state/Remarks on troubleshooting
	1	Defective machine monitor	Machine monitor may be defective. (Since trouble is in system, troubleshooting cannot be carried out.)

Trouble	(2) When gearshift mode is changed, gearshift setting of power train is not changed.
Related information	

Possible causes and standard value in normal state	Cause		Standard value in normal state/Remarks on troubleshooting
	1	Defective machine monitor	Machine monitor may be defective. (Since trouble is in system, troubleshooting cannot be carried out.)
	2	Defective power train controller	Power train controller may be defective. (Since trouble is in system, troubleshooting cannot be carried out.)

E-16 Customize function does not operate normally

Trouble	(1) When customize switch is operated, customize screen is not displayed.
Related information	

Possible causes and standard value in normal state	Cause		Standard value in normal state/Remarks on troubleshooting
	1	Defective machine monitor	Machine monitor may be defective. (Since trouble is in system, troubleshooting cannot be carried out.)

Trouble	(2) When setting is changed on customize screen, setting of machine is not changed.
Related information	

Possible causes and standard value in normal state	Cause		Standard value in normal state/Remarks on troubleshooting
	1	Defective machine monitor	Machine monitor may be defective. (Since trouble is in system, troubleshooting cannot be carried out.)
	2	Defective engine controller, defective power train controller, or defective pump controller	Engine controller, power train controller, or pump controller may be defective. (Since trouble is in system, troubleshooting cannot be carried out.)

E-17 Customize memory function does not normally

Trouble	(1) When customize memory switch is operated, customize memory screen is not displayed.
Related information	

Possible causes and standard value in normal state	Cause		Standard value in normal state/Remarks on troubleshooting
	1	Defective machine monitor	Machine monitor may be defective. (Since trouble is in system, troubleshooting cannot be carried out.)

Trouble	(2) When selection is changed on customize memory screen, setting of machine is not changed.
Related information	

Possible causes and standard value in normal state	Cause		Standard value in normal state/Remarks on troubleshooting
	1	Defective machine monitor	Machine monitor may be defective. (Since trouble is in system, troubleshooting cannot be carried out.)
	2	Defective engine controller, defective power train controller, or defective pump controller	Engine controller, power train controller, or pump controller may be defective. (Since trouble is in system, troubleshooting cannot be carried out.)

E-18 Float mode does not change

Trouble	(1) When float mode switch is operated, float mode monitor does not light up or go off.
Related information	

Possible causes and standard value in normal state	Cause		Standard value in normal state/Remarks on troubleshooting
	1	Defective machine monitor	Machine monitor may be defective. (Since trouble is in system, troubleshooting cannot be carried out.)

Trouble	(2) When float mode is changed, setting of machine is not changed.
Related information	

Possible causes and standard value in normal state	Cause		Standard value in normal state/Remarks on troubleshooting
	1	Defective machine monitor	Machine monitor may be defective. (Since trouble is in system, troubleshooting cannot be carried out.)
	2	Defective pump controller	Pump controller may be defective. (Since trouble is in system, troubleshooting cannot be carried out.)

E-19 Alarm buzzer cannot be stopped

Trouble	• Alarm buzzer cannot be stopped.
Related information	

Possible causes and standard value in normal state	Cause		Standard value in normal state/Remarks on troubleshooting
	1	Defective machine monitor	Machine monitor may be defective. (Since trouble is in system, troubleshooting cannot be carried out.)

E-20 Air conditioner does not operate normally (including air conditioner fault history)

Trouble	(1) When air conditioner switch is operated, air conditioner control screen is not displayed.
Related information	

Possible causes and standard value in normal state		Cause	Standard value in normal state/Remarks on troubleshooting
	1	Defective machine monitor	Machine monitor may be defective. (Since trouble is in system, troubleshooting cannot be carried out.)

Trouble	(2) When air conditioner switch is operated, air conditioner does not operate at all.
Related information	

Possible causes and standard value in normal state		Cause	Standard value in normal state/Remarks on troubleshooting		
	1	Defective circuit breaker (CB3)	If circuit breaker is turned OFF, circuit probably has ground fault (See cause 4).		
	2	Defective fuse in unit	If fuse in unit is broken, circuit in unit probably has ground fault (See cause 4).		
	3	Disconnection in wiring harness (Disconnection in wiring or defective contact in connector)	★ Prepare with starting switch OFF, then carry out troubleshooting without turning starting switch ON.		
			Wiring harness between CB3 (2) – fuse in unit - ACW (wiring side) (6)	Resistance	Max. 1 Ω
			Wiring harness between ACW (wiring side) (16) – chassis ground (GND12)	Resistance	Max. 1 Ω
	4	Ground fault in wiring harness (Contact with GND circuit)	★ Prepare with starting switch OFF, then carry out troubleshooting without turning starting switch ON.		
			Wiring harness between CB3 (2) – fuse in unit – ACW (wiring side) (6) or circuit branch end and chassis ground	Resistance	Min. 1 MΩ
	5	Defective air conditioner controller	★ Prepare with starting switch OFF, then turn starting switch ON and carry out troubleshooting.		
			ACW (wiring side)	Voltage	
			Between (6) – (16)	20 – 30 V	
			If above voltage is normal, air conditioner controller may be defective.		
	6	Defective machine monitor	If causes 1 – 5 are not detected, machine monitor may be defective. (Since trouble is in system, troubleshooting cannot be carried out.)		

Trouble	(3) Air does not come out (Air flow is insufficient).
Related information	

<table>
<tr><td rowspan="20">Possible causes and standard value in normal state</td><td colspan="2">Cause</td><td colspan="5">Standard value in normal state/Remarks on troubleshooting</td></tr>
<tr><td rowspan="5">1</td><td rowspan="5">Defective blower relay (Internal disconnection)</td><td colspan="5">★ Prepare with starting switch OFF, then carry out troubleshooting without turning starting switch ON (coil side).</td></tr>
<tr><td colspan="3">AC03 (male)</td><td colspan="2">Resistance</td></tr>
<tr><td colspan="3">Between (1) – (3)</td><td colspan="2">140 – 340 Ω</td></tr>
<tr><td colspan="5">★ Prepare with starting switch OFF, then turn starting switch ON and carry out troubleshooting (contact side).</td></tr>
<tr><td>AC03</td><td colspan="2">Air conditioner switch</td><td>Voltage</td></tr>
<tr><td rowspan="3">2</td><td rowspan="3">Defective power transistor (Internal defect)</td><td>Between (4) – chassis ground</td><td colspan="2">Air blow position</td><td>20 – 30 V</td></tr>
<tr><td colspan="5">★ Prepare with starting switch OFF, then turn starting switch ON and carry out troubleshooting.</td></tr>
<tr><td colspan="2">Fan switch
Operate between Low and Medium and High.</td><td colspan="3">If air flow changes according to operation of fan switch, power transistor (PTR) is normal.</td></tr>
<tr><td rowspan="4">3</td><td rowspan="4">Defective blower motor (Internal defect)</td><td colspan="5">★ Prepare with starting switch OFF, then turn starting switch ON and carry out troubleshooting.</td></tr>
<tr><td>MB (wiring side)</td><td colspan="2">Air conditioner switch</td><td>Voltage</td></tr>
<tr><td>Between (1) – (2)</td><td colspan="2">Air blow position</td><td>20 – 30 V</td></tr>
<tr><td colspan="5">If above voltage is normal and blower motor does not revolve, blower motor (MB) is defective.</td></tr>
<tr><td rowspan="9">4</td><td rowspan="9">Disconnection in wiring harness (Disconnection in wiring or defective contact in connector)</td><td colspan="5">★ Prepare with starting switch OFF, then carry out troubleshooting without turning starting switch ON.</td></tr>
<tr><td colspan="3">Wiring harness between CB3 (2) – fuse in unit - AC03 (female) (1)</td><td>Resistance</td><td>Max. 1 Ω</td></tr>
<tr><td colspan="3">Wiring harness between AC03 (female) (3) – ACW (wiring side) (36)</td><td>Resistance</td><td>Max. 1 Ω</td></tr>
<tr><td colspan="3">Wiring harness between CB3 (2) – AC03 (female) (4)</td><td>Resistance</td><td>Max. 1 Ω</td></tr>
<tr><td colspan="3">Wiring harness between AC03 (female) (5) – MB (wiring side) (1)</td><td>Resistance</td><td>Max. 1 Ω</td></tr>
<tr><td colspan="3">Wiring harness between MB (wiring side) (2) – PTR (wiring side) (3)</td><td>Resistance</td><td>Max. 1 Ω</td></tr>
<tr><td colspan="3">Wiring harness between PTR (wiring side) (1) – chassis ground (GND12)</td><td>Resistance</td><td>Max. 1 Ω</td></tr>
<tr><td colspan="3">Wiring harness between PTR (wiring side) (2) – ACW (wiring side) (8)</td><td>Resistance</td><td>Max. 1 Ω</td></tr>
<tr><td colspan="3">Wiring harness between PTR (wiring side) (4) – ACW (wiring side) (7)</td><td>Resistance</td><td>Max. 1 Ω</td></tr>
</table>

Possible causes and standard value in normal state	Cause		Standard value in normal state/Remarks on troubleshooting		
	5	Ground fault in wiring harness (Contact with GND circuit)	★ Prepare with starting switch OFF, then carry out troubleshooting without turning starting switch ON.		
			Wiring harness between AC03 (female) (3) – ACW (wiring side) (36) and chassis ground	Resistance	Min. 1 MΩ
			Wiring harness between AC03 (female) (5) – MB (wiring side) (1) and chassis ground	Resistance	Min. 1 MΩ
			Wiring harness between MB (wiring side) (2) – PTR (wiring side) (3) and chassis ground	Resistance	Min. 1 MΩ
			Wiring harness between PTR (wiring side) (2) – ACW (wiring side) (8) and chassis ground	Resistance	Min. 1 MΩ
	6	Defective air conditioner controller	If causes 1 – 5 are not detected, air conditioner controller may be defective. (Since trouble is in system, troubleshooting cannot be carried out.)		
	7	Defective air conditioner system	If causes 1 – 5 are not detected, air conditioner system may be defective. See Machine Component Volume, Shop Manual, Troubleshooting, Air conditioner, Troubleshooting.		

Trouble	(4) Air is not cooled (Cooling performance is insufficient).
Related information	

	Cause		Standard value in normal state/Remarks on troubleshooting			
Possible causes and standard value in normal state	1	Defective compressor relay (Internal disconnection)	★ Prepare with starting switch OFF, then carry out troubleshooting without turning starting switch ON (coil side).			
			AC04 (male)		Resistance	
			Between (1) – (3)		140 – 340 Ω	
			★ Prepare with starting switch OFF, then turn starting switch ON and carry out troubleshooting (contact side).			
			AC04	Air conditioner switch	Voltage	
			Between (2) – chassis ground	Cooling position	20 – 30 V	
	2	Defective internal air sensor	Internal air sensor may be defective. Carry out troubleshooting for "Abnormality in internal air sensor".			
	3	Defective high and low pressure switches	High and low pressure switches may be defective. Carry out troubleshooting for "Abnormality in refrigerant".			
	4	Defective compressor clutch (Internal defect)	Compressor clutch may be defective. Check it directly.			
	5	Defective compressor (Internal defect)	Compressor may be defective. Check it directly.			
	6	Disconnection in wiring harness (Disconnection in wiring or defective contact in connector)	★ Prepare with starting switch OFF, then carry out troubleshooting without turning starting switch ON.			
			Wiring harness between CB3 (2) – fuse in unit – AC04 (female) (1)		Resistance	Max. 1 Ω
			Wiring harness between AC04 (female) (3) – ACW (wiring side) (35)		Resistance	Max. 1 Ω
			Wiring harness between CB3 (2) – AC04 (female) (4)		Resistance	Max. 1 Ω
			Wiring harness between AC04 (female) (2) – A/C (female) (1)		Resistance	Max. 1 Ω
	7	Ground fault in wiring harness (Contact with GND circuit)	★ Prepare with starting switch OFF, then carry out troubleshooting without turning starting switch ON.			
			Wiring harness between AC04 (female) (3) – ACW (wiring side) (35) and chassis ground		Resistance	Min. 1 MΩ
			Wiring harness between AC04 (female) (2) – A/C (female) (1) and chassis ground		Resistance	Min. 1 MΩ
	8	Defective air conditioner controller	If causes 1 – 7 are not detected, air conditioner controller may be defective. (Since trouble is in system, troubleshooting cannot be carried out.)			
	9	Defective air conditioner system	If causes 1 – 7 are not detected, air conditioner system may be defective. See Machine Component Volume, Shop Manual, Troubleshooting, "Air conditioner", Troubleshooting.			

Trouble	(5) Air conditioner fault history: Communication condition "CAN disconnection", Communication condition "Abnormal"
Related information	• While abnormality in communication is being detected, "CAN disconnection" is displayed. • If abnormality in communication has been detected and reset, "Abnormality" is displayed. • If "CAN disconnection" is displayed as communication condition, communication cannot be carried out normally. Accordingly, condition of other items is not displayed. • Method of reproducing fault history: Turn starting switch ON.

	Cause		Standard value in normal state/Remarks on troubleshooting		
Possible causes and standard value in normal state	1	Disconnection in wiring harness (Disconnection in wiring or defective contact in connector)	★ Prepare with starting switch OFF, then carry out troubleshooting without turning starting switch ON.		
			Wiring harness between AC02 (female) (1) – CM02 (female) (8), (9)	Resistance	Max. 1 Ω
			Wiring harness between AC02 (female) (2) – CM02 (female) (10)	Resistance	Max. 1 Ω
	2	Ground fault in wiring harness (Contact with GND circuit)	★ Prepare with starting switch OFF, then carry out troubleshooting without turning starting switch ON.		
			Wiring harness between AC02 (female) (1) – CM02 (female) (8), (9), EGC2 (female) (46), STC2 (female) (32), WEC2 (female) (32), CA1 (female) (A), or SRV (female) (3) and chassis ground	Resistance	Max. 1 Ω
			Wiring harness between AC02 (female) (2) – CM02 (female) (10), EGC2 (female) (47), STC2 (female) (22), WEC2 (female) (22), CA1 (female) (B), or SRV (female) (10) and chassis ground	Resistance	Max. 1 Ω
	3	Hot short (Short circuit with 24V circuit) in wiring harness	★ Prepare with starting switch OFF, then turn starting switch ON and carry out troubleshooting.		
			Wiring harness between AC02 (female) (1) – CM02 (female) (8), (9), EGC2 (female) (46), STC2 (female) (32), WEC2 (female) (32), CA1 (female) (A), or SRV (female) (3) and chassis ground	Resistance	Min. 1 MΩ
			Wiring harness between AC02 (female) (2) – CM02 (female) (10), EGC2 (female) (47), STC2 (female) (22), WEC2 (female) (22), CA1 (female) (B), or SRV (female) (10) and chassis ground	Resistance	Min. 1 MΩ
	4	Defective CAN terminal resistance (Internal short circuit or disconnection)	★ Prepare with starting switch OFF, then carry out troubleshooting without turning starting switch ON.		
			CA1 (male)	Resistance	
			Between (A) – (B)	Approx. 120 Ω	
	5	Defective air conditioner controller	If causes 1 – 4 are not detected, air conditioner controller may be defective. (Since trouble is in system, troubleshooting cannot be carried out.)		
	6	Defective machine monitor	If causes 1 – 4 are not detected, machine monitor may be defective. (Since trouble is in system, troubleshooting cannot be carried out.)		

Trouble	(6) Air conditioner fault history: Setting condition "Abnormality"
Related information	• If setting of air conditioner controller model is different from setting of machine monitor model, "Abnormality" is displayed. • If "CAN disconnection" is displayed as communication condition, communication cannot be carried out normally. Accordingly, this condition is not displayed. • Method of reproducing fault history: Turn starting switch ON.

Possible causes and standard value in normal state	Cause		Standard value in normal state/Remarks on troubleshooting
	1	Defective air conditioner controller	Air conditioner controller may be defective. (Since trouble is in system, troubleshooting cannot be carried out.)
	2	Defective machine monitor	Machine monitor may be defective. (Since trouble is in system, troubleshooting cannot be carried out.)

Trouble	(7) Air conditioner fault history: Internal air sensor "Abnormality"
Related information	• If "CAN disconnection" is displayed as communication condition, communication cannot be carried out normally. Accordingly, this condition is not displayed. • Method of reproducing fault history: Turn starting switch ON + Turn air conditioner (A/C) switch ON.

Possible causes and standard value in normal state	Cause		Standard value in normal state/Remarks on troubleshooting		
	1	Defective internal air sensor (Internal disconnection or short circuit)	★ Prepare with starting switch OFF, then carry out troubleshooting without turning starting switch ON.		
			THI (device side)	Resistance	
			Between (1) – (2)	300 Ω – 430 kΩ	
	2	Disconnection in wiring harness (Disconnection in wiring or defective contact in connector)	★ Prepare with starting switch OFF, then carry out troubleshooting without turning starting switch ON.		
			Wiring harness between ACW (wiring side) (11) – THI (wiring side) (2)	Resistance	Max. 1 Ω
			Wiring harness between ACW (wiring side) (27) – THI (wiring side) (1)	Resistance	Max. 1 Ω
	3	Short circuit in wiring harness (with GND circuit)	★ Prepare with starting switch OFF, then carry out troubleshooting without turning starting switch ON.		
			Wiring harness between ACW (wiring side) (11) – THI (wiring side) (2) and chassis ground	Resistance	Min. 1 MΩ
	4	Hot short (Short circuit with 24V circuit) in wiring harness	★ Prepare with starting switch OFF, then turn starting switch ON and carry out troubleshooting.		
			Wiring harness between ACW (wiring side) (11) – THI (wiring side) (2) and chassis ground	Voltage	Max. 1 V
	5	Defective air conditioner controller	If causes 1 – 4 are not detected, air conditioner controller may be defective. (Since trouble is in system, troubleshooting cannot be carried out.)		

Trouble	(8) Air conditioner fault history: External air sensor "Unused"
Related information	• External air sensor is not used in air conditioner system of this machine. • If "CAN disconnection" is displayed as communication condition, communication cannot be carried out normally. Accordingly, this condition is not displayed.

Possible causes and standard value in normal state	Cause		Standard value in normal state/Remarks on troubleshooting
	1	Normal display	Since external air sensor is not used in air conditioner system of this machine, above display is normal.

Trouble	(9) Air conditioner fault history: Air flow sensor "Abnormality"
Related information	• If "CAN disconnection" is displayed as communication condition, communication cannot be carried out normally. Accordingly, this condition is not displayed. • Method of reproducing fault history: Turn starting switch ON + Turn air conditioner (A/C) switch ON.

Possible causes and standard value in normal state	Cause		Standard value in normal state/Remarks on troubleshooting		
	1	Defective air flow sensor (Internal disconnection or short circuit)	★ Prepare with starting switch OFF, then carry out troubleshooting without turning starting switch ON.		
			TH_F (device side)	Resistance	
			Between (1) – (2)	100 Ω – 115 kΩ	
	2	Disconnection in wiring harness (Disconnection in wiring or defective contact in connector)	★ Prepare with starting switch OFF, then carry out troubleshooting without turning starting switch ON.		
			Wiring harness between AC_W (wiring side) (12) – TH_F (wiring side) (2)	Resistance	Max. 1 Ω
			Wiring harness between AC_W (wiring side) (27) – TH_F (wiring side) (1)	Resistance	Max. 1 Ω
	3	Short circuit in wiring harness (with GND circuit)	★ Prepare with starting switch OFF, then carry out troubleshooting without turning starting switch ON.		
			Wiring harness between AC_W (wiring side) (12) – TH_F (wiring side) (2) and chassis ground	Resistance	Min. 1 MΩ
	4	Hot short (Short circuit with 24V circuit) in wiring harness	★ Prepare with starting switch OFF, then turn starting switch ON and carry out troubleshooting.		
			Wiring harness between AC_W (wiring side) (12) – TH_F (wiring side) (2) and chassis ground	Voltage	Max. 1 V
	5	Defective air conditioner controller	If causes 1 – 4 are not detected, air conditioner controller may be defective. (Since trouble is in system, troubleshooting cannot be carried out.)		

Trouble	(10) Air conditioner fault history: Daylight sensor "Abnormality"
Related information	• If "CAN disconnection" is displayed as communication condition, communication cannot be carried out normally. Accordingly, this condition is not displayed. • Method of reproducing fault history: Turn starting switch ON + Turn air conditioner (A/C) switch ON.

	Cause		Standard value in normal state/Remarks on troubleshooting		
Possible causes and standard value in normal state	1	Defective daylight sensor (Internal defect)	Daylight sensor may be defective.		
	2	Disconnection in wiring harness (Disconnection in wiring or defective contact in connector)	★ Prepare with starting switch OFF, then carry out troubleshooting without turning starting switch ON.		
			Wiring harness between ACW (wiring side) (3) – SLS (female) (1)	Resistance	Max. 1 Ω
			Wiring harness between ACW (wiring side) (15) – SLS (female) (2)	Resistance	Max. 1 Ω
	3	Ground fault in wiring harness (Contact with GND circuit)	★ Prepare with starting switch OFF, then carry out troubleshooting without turning starting switch ON.		
			Wiring harness between ACW (wiring side) (3) – SLS (female) (1) or circuit branch end and chassis ground	Resistance	Min. 1 MΩ
			Wiring harness between ACW (wiring side) (15) – SLS (female) (2) and chassis ground	Resistance	Min. 1 MΩ
	4	Hot short (Short circuit with 24V circuit) in wiring harness	★ Prepare with starting switch OFF, then turn starting switch ON and carry out troubleshooting.		
			Wiring harness between ACW (wiring side) (3) – SLS (female) (1) or circuit branch end and chassis ground	Voltage	Max. 1 V
			Wiring harness between ACW (wiring side) (15) – SLS (female) (2) and chassis ground	Voltage	Max. 1 V
	5	Defective air conditioner controller	If causes 1 – 4 are not detected, air conditioner controller may be defective. (Since trouble is in system, troubleshooting cannot be carried out.)		

Trouble	(11) Air conditioner fault history: Air outlet damper "Abnormality"
Related information	• If "CAN disconnection" is displayed as communication condition, communication cannot be carried out normally. Accordingly, this condition is not displayed. • Method of reproducing fault history: Turn starting switch ON + Turn air conditioner (A/C) switch ON.

	Cause		Standard value in normal state/Remarks on troubleshooting		
Possible causes and standard value in normal state	1	Defective air outlet servomotor (Internal defect)	Air outlet servomotor may be defective.		
	2	Disconnection in wiring harness (Disconnection in wiring or defective contact in connector)	★ Prepare with starting switch OFF, then carry out troubleshooting without turning starting switch ON.		
			Wiring harness between MV1 (wiring side) (1) – ACW (wiring side) (3)	Resistance	Max. 1 Ω
			Wiring harness between MV1 (wiring side) (3) – ACW (wiring side) (27)	Resistance	Max. 1 Ω
			Wiring harness between MV1 (wiring side) (5) – ACW (wiring side) (9)	Resistance	Max. 1 Ω
			Wiring harness between MV1 (wiring side) (6) – ACW (wiring side) (24)	Resistance	Max. 1 Ω
			Wiring harness between MV1 (wiring side) (7) – ACW (wiring side) (23)	Resistance	Max. 1 Ω
	3	Ground fault in wiring harness (Contact with GND circuit)	★ Prepare with starting switch OFF, then carry out troubleshooting without turning starting switch ON.		
			Wiring harness between MV1 (wiring side) (1) – ACW (wiring side) (3) or circuit branch end and chassis ground	Resistance	Min. 1 MΩ
			Wiring harness between MV1 (wiring side) (5) – ACW (wiring side) (9) and chassis ground	Resistance	Min. 1 MΩ
			Wiring harness between MV1 (wiring side) (6) - ACW (wiring side) (24) and chassis ground	Resistance	Min. 1 MΩ
			Wiring harness between MV1 (wiring side) (7) – ACW (wiring side) (23) and chassis ground	Resistance	Min. 1 MΩ
	4	Hot short (Short circuit with 24V circuit) in wiring harness	★ Prepare with starting switch OFF, then turn starting switch ON and carry out troubleshooting.		
			Wiring harness between MV1 (wiring side) (1) – ACW (wiring side) (3) or circuit branch end and chassis ground	Voltage	Max. 1 V
			Wiring harness between MV1 (wiring side) (5) – ACW (wiring side) (9) and chassis ground	Voltage	Max. 1 V
			Wiring harness between MV1 (wiring side) (6) – ACW (wiring side) (24) and chassis ground	Voltage	Max. 1 V
			Wiring harness between MV1(wiring side) (7) – ACW (wiring side) (23) and chassis ground	Voltage	Max. 1 V
	5	Defective air conditioner controller	If causes 1 – 4 are not detected, air conditioner controller may be defective. (Since trouble is in system, troubleshooting cannot be carried out.)		

Trouble	(12) Air conditioner fault history: A/M damper "Abnormality"
Related information	• If "CAN disconnection" is displayed as communication condition, communication cannot be carried out normally. Accordingly, this condition is not displayed. • Method of reproducing fault history: Turn starting switch ON + Turn air conditioner (A/C) switch ON.

	Cause		Standard value in normal state/Remarks on troubleshooting		
Possible causes and standard value in normal state	1	Defective air mix servomotor (Internal defect)	Air mix servomotor may be defective.		
	2	Disconnection in wiring harness (Disconnection in wiring or defective contact in connector)	★ Prepare with starting switch OFF, then carry out troubleshooting without turning starting switch ON.		
			Wiring harness between MAM (wiring side) (1) – ACW (wiring side) (27)	Resistance	Max. 1 Ω
			Wiring harness between MAM (wiring side) (3) – ACW (wiring side) (3)	Resistance	Max. 1 Ω
			Wiring harness between MAM(wiring side) (5) – ACW(wiring side) (2)	Resistance	Max. 1 Ω
			Wiring harness between MAM(wiring side) (6) – ACW (wiring side) (21)	Resistance	Max. 1 Ω
			Wiring harness between MAM (wiring side) (7) – ACW (wiring side) (22)	Resistance	Max. 1 Ω
	3	Ground fault in wiring harness (Contact with GND circuit)	★ Prepare with starting switch OFF, then carry out troubleshooting without turning starting switch ON.		
			Wiring harness between MAM(wiring side) (3) – ACW (wiring side) (3) or circuit branch end and chassis ground	Resistance	Min. 1 MΩ
			Wiring harness between MAM (wiring side) (5) – ACW (wiring side) (2) and chassis ground	Resistance	Min. 1 MΩ
			Wiring harness between MAM (wiring side) (6) – ACW (wiring side) (21) and chassis ground	Resistance	Min. 1 MΩ
			Wiring harness between MAM (wiring side) (7) – ACW (wiring side) (22) and chassis ground	Resistance	Min. 1 MΩ
	4	Hot short (Short circuit with 24V circuit) in wiring harness	★ Prepare with starting switch OFF, then turn starting switch ON and carry out troubleshooting.		
			Wiring harness between MAM (wiring side) (3) – ACW (wiring side) (3) or circuit branch end and chassis ground	Voltage	Max. 1 V
			Wiring harness between MAM (wiring side) (5) – ACW (wiring side) (2) and chassis ground	Voltage	Max. 1 V
			Wiring harness between MAM (wiring side) (6) – ACW (wiring side) (21) and chassis ground	Voltage	Max. 1 V
			Wiring harness between MAM (wiring side) (7) – ACW (wiring side) (22) and chassis ground	Voltage	Max. 1 V
	5	Defective air conditioner controller	If causes 1 – 4 are not detected, air conditioner controller may be defective. (Since trouble is in system, troubleshooting cannot be carried out.)		

Trouble	(13) Air conditioner fault history: Refrigerant "Abnormality"
Related information	• If "CAN disconnection" is displayed as communication condition, communication cannot be carried out normally. Accordingly, this condition is not displayed. • Method of reproducing fault history: Turn starting switch ON + Turn air conditioner (A/C) switch ON.

<table>
<tr><td rowspan="8">Possible causes and standard value in normal state</td><td colspan="2">Cause</td><td colspan="4">Standard value in normal state/Remarks on troubleshooting</td></tr>
<tr><td>1</td><td>Insufficient refrigerant (gas) (when system is normal)</td><td colspan="4">Refrigerant (gas) may be insufficient. Check it directly.</td></tr>
<tr><td rowspan="3">2</td><td rowspan="3">Defective high and low pressure switches (Internal disconnection)</td><td colspan="4">★ Prepare with starting switch OFF, then carry out troubleshooting without turning starting switch ON.</td></tr>
<tr><td colspan="2">AC05 (male)</td><td colspan="2">Resistance</td></tr>
<tr><td colspan="2">Between (1) – (2)</td><td colspan="2">Max. 1 Ω</td></tr>
<tr><td rowspan="3">3</td><td rowspan="3">Disconnection in wiring harness (Disconnection in wiring or defective contact in connector)</td><td colspan="4">★ Prepare with starting switch OFF, then carry out troubleshooting without turning starting switch ON.</td></tr>
<tr><td>Wiring harness between ACw (wiring side) (4) – AC05 (female) (1)</td><td>Resistance</td><td>Max. 1 Ω</td></tr>
<tr><td>Wiring harness between AC05 (female) (2) – chassis ground (GND12)</td><td>Resistance</td><td>Max. 1 Ω</td></tr>
<tr><td>4</td><td>Defective air conditioner controller</td><td colspan="4">If causes 1 – 3 are not detected, air conditioner controller may be defective. (Since trouble is in system, troubleshooting cannot be carried out.)</td></tr>
</table>

Circuit diagram related to air conditioner

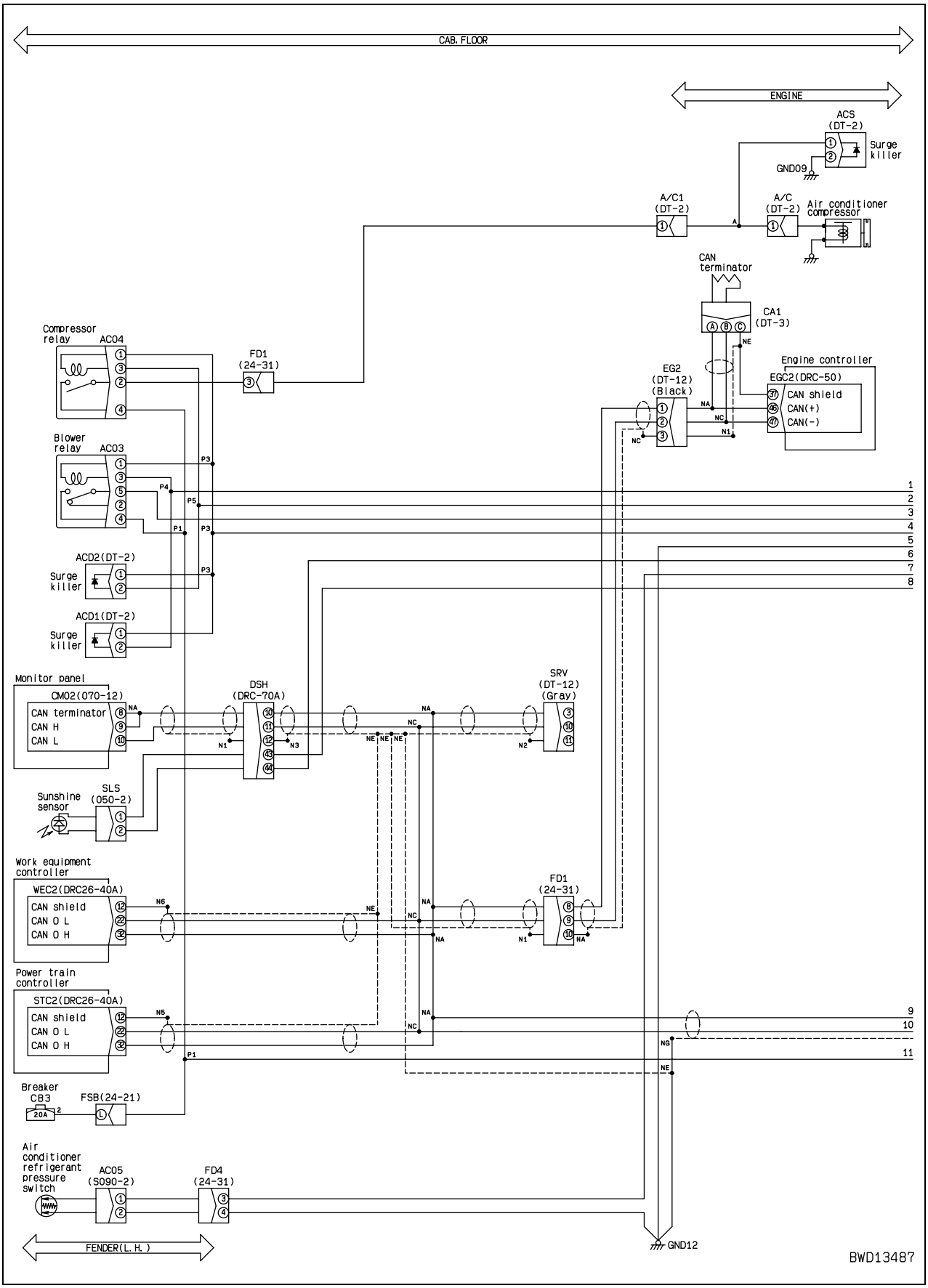

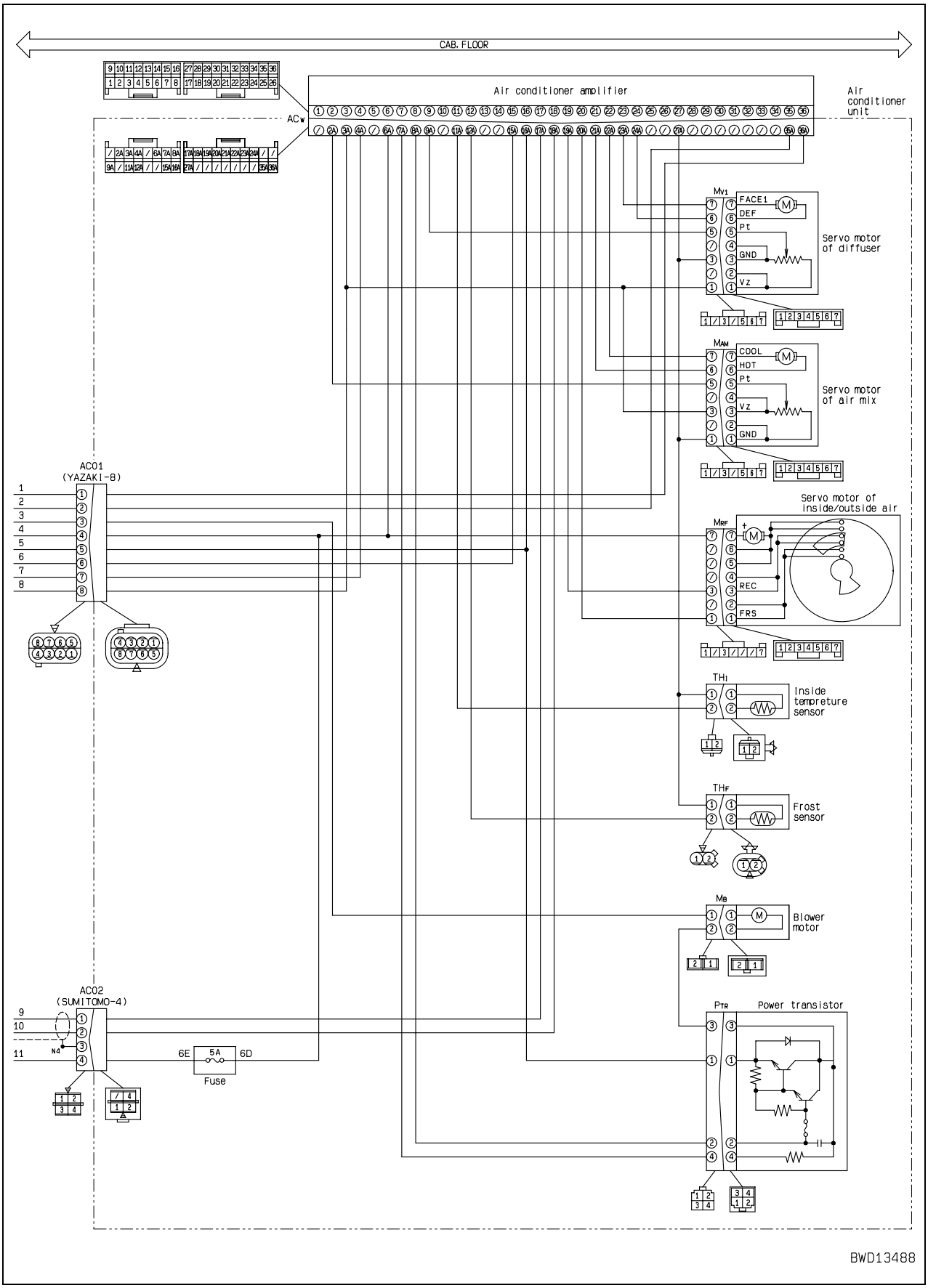
CAB. FLOOR
Air conditioner amplifier
Air conditioner unit
AC
MV1
FACE1
DEF
Pt
GND
VZ
Servo motor of diffuser
MAM
COOL
HOT
Pt
VZ
GND
Servo motor of air mix
AC01
(YAZAKI-8)
Servo motor of inside/outside air
MRF
REC
FRS
TH1
Inside tempreture sensor
THF
Frost sensor
MB
Blower motor
AC02
(SUMITOMO-4)
N4
6E
5A
6D
Fuse
PTR
Power transistor
BWD13488

E-21 When starting switch is turned OFF, service meter is not displayed

Trouble	• When starting switch is turned OFF, service meter is not displayed.
Related information	• While starting switch is at OFF position, if following switches are operated, service meter is displayed at top center of screen. Operation of switches: [4] + [1] (Press simultaneously)

		Cause	Standard value in normal state/Remarks on troubleshooting
Possible causes and standard value in normal state	1	Defective backup power supply system	When starting switch is turned ON, if machine monitor displays nothing, backup power supply system may be defective. In this case, carry out troubleshooting for "E-1 When starting switch turned ON, machine monitor displays nothing".
	2	Defective machine monitor	If cause 1 is not detected, machine monitor may be defective. (Since trouble is in system, troubleshooting cannot be carried out.)

E-22 Machine monitor cannot be set in service mode

Trouble	• Machine monitor cannot be set in service mode.
Related information	• If following switches are operated, machine monitor is set in service mode. Operation of switches: [4] + [1] → [2] → [3] (While pressing [4], press other switches in order)

		Cause	Standard value in normal state/Remarks on troubleshooting
Possible causes and standard value in normal state	1	Defective machine monitor	Machine monitor may be defective. (Since trouble is in system, troubleshooting cannot be carried out.)

E-23 Ripper pin puller cylinder does not operate

Trouble	(1) When pin puller switch is pulled out, cylinder is not retracted. (2) When pin puller switch is pushed in, cylinder is not extended.
Related information	

<table>
<tr><td rowspan="20">Possible causes and standard value in normal state</td><td colspan="2">Cause</td><td colspan="4">Standard value in normal state/Remarks on troubleshooting</td></tr>
<tr><td>1</td><td>Defective fuse(FS2-3)</td><td colspan="4">If fuse is broken, circuit probably has ground fault (See cause 5).</td></tr>
<tr><td rowspan="4">2</td><td rowspan="4">Defective pin puller switch</td><td colspan="4">★ Prepare with starting switch OFF, then carry out troubleshooting without turning starting switch ON.</td></tr>
<tr><td>PLSW (male)</td><td>Pin puller switch</td><td colspan="2">Resistance</td></tr>
<tr><td rowspan="2">Between (1) – (2)</td><td>Pulled out</td><td colspan="2">Max. 1 Ω</td></tr>
<tr><td>Pushed in</td><td colspan="2">Min. 1 MΩ</td></tr>
<tr><td rowspan="4">3</td><td rowspan="4">Defective pin puller solenoid</td><td colspan="4">★ Prepare with starting switch OFF, then carry out troubleshooting without turning starting switch ON.</td></tr>
<tr><td colspan="2">PPL (male)</td><td colspan="2">Resistance</td></tr>
<tr><td colspan="2">Between (1) – (2)</td><td colspan="2">10 – 80 Ω</td></tr>
<tr><td colspan="2">Between (1) – chassis ground</td><td colspan="2">Min. 1 MΩ</td></tr>
<tr><td rowspan="4">4</td><td rowspan="4">Disconnection in wiring harness (Disconnection in wiring or defective contact in connector)</td><td colspan="4">★ Prepare with starting switch OFF, then carry out troubleshooting without turning starting switch ON.</td></tr>
<tr><td colspan="2">Wiring harness between FS22 (3) – PLSW (female) (1)</td><td>Resistance</td><td>Max. 1 Ω</td></tr>
<tr><td colspan="2">Wiring harness between PLSW (female) (2) – PPL (female) (1)</td><td>Resistance</td><td>Max. 1 Ω</td></tr>
<tr><td colspan="2">Wiring harness between PLSW (female) (2) – chassis ground (GND03)</td><td>Resistance</td><td>Max. 1 Ω</td></tr>
<tr><td rowspan="3">5</td><td rowspan="3">Ground fault in wiring harness (Contact with GND circuit)</td><td colspan="4">★ Prepare with starting switch OFF, then carry out troubleshooting without turning starting switch ON.</td></tr>
<tr><td colspan="2">Wiring harness between FS22 (3) – PLSW (female) (1) or circuit branch end and chassis ground</td><td>Resistance</td><td>Min. 1 MΩ</td></tr>
<tr><td colspan="2">Wiring harness between PLSW (female) (2) – PPL (female) (1) and chassis ground</td><td>Resistance</td><td>Min. 1 MΩ</td></tr>
<tr><td rowspan="3">6</td><td rowspan="3">Hot short (Short circuit with 24V circuit) in wiring harness</td><td colspan="4">★ Prepare with starting switch OFF, then turn starting switch ON and carry out troubleshooting.</td></tr>
<tr><td colspan="2">Wiring harness between FS22 (3) – PLSW (female) (1) or circuit branch end and chassis ground</td><td>Voltage</td><td>Max. 1 V</td></tr>
<tr><td colspan="2">Wiring harness between PLSW (female) (2) – PPL (female) (1) and chassis ground</td><td>Voltage</td><td>Max. 1 V</td></tr>
</table>

Circuit diagram related to ripper pin puller switch and solenoid

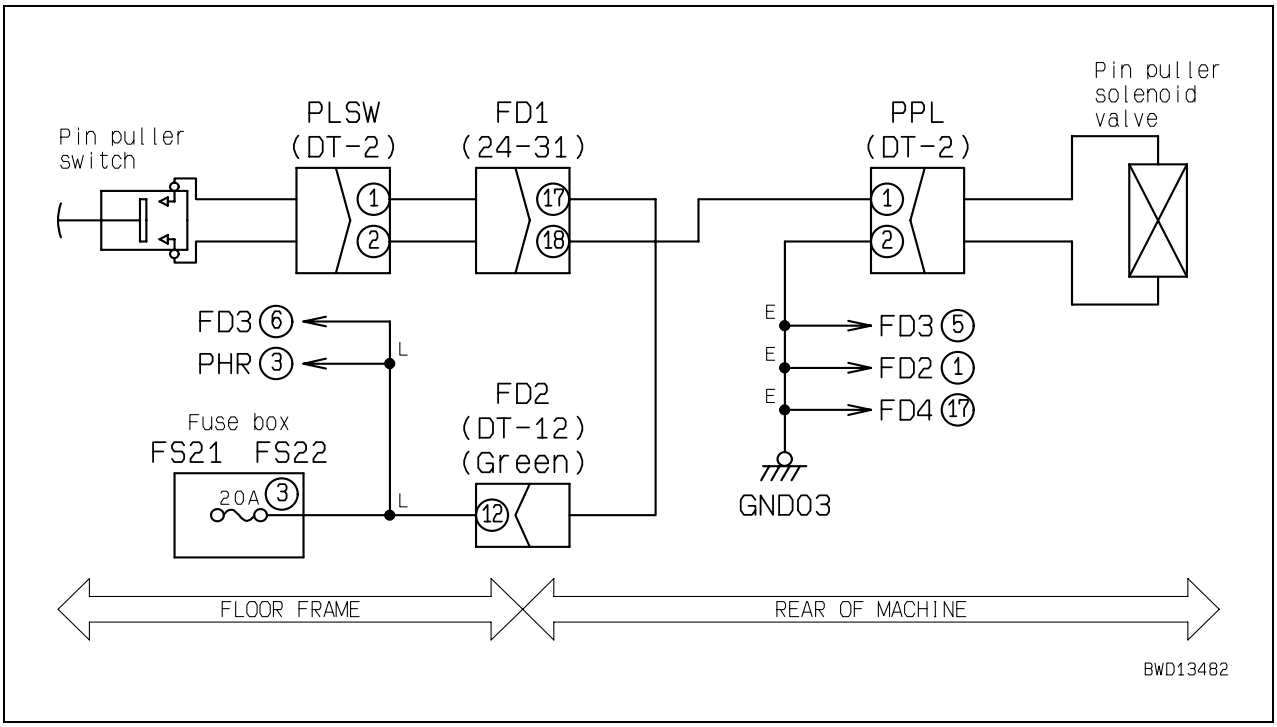

E-24 Backup alarm does not sound or does not stop

Trouble	• Backup alarm does not sound or does not stop.
Related information	

	Cause		Standard value in normal state/Remarks on troubleshooting		
Possible causes and standard value in normal state	1	Defective backup alarm relay (Internal disconnection or short circuit)	★ Prepare with starting switch OFF, then turn starting switch ON and carry out troubleshooting.		
			Replace backup alarm relay (Right No.) with another relay. If backup alarm operates normally at this time, backup alarm relay is defective.	BKA	
	2	Disconnection in wiring harness (Disconnection in wiring or defective contact in connector)	★ Prepare with starting switch OFF, then carry out troubleshooting without turning starting switch ON.		
			Wiring harness between BKA (female) (3) – branch point (F)	Resistance	Max. 1 Ω
			Wiring harness between BKA (female) (5) – BKAL (female) (1)	Resistance	Max. 1 Ω
			Wiring harness between BKAL (female) (2) – chassis ground (GND03)	Resistance	Max. 1 Ω
	3	Ground fault in wiring harness (Contact with GND circuit)	★ Prepare with starting switch OFF, then carry out troubleshooting without turning starting switch ON.		
			Wiring harness between BKA (female) (5) – BKAL (female) (1) or circuit branch end and chassis ground	Resistance	Min. 1 MΩ
	4	Hot short (Short circuit with 24V circuit) in wiring harness	★ Prepare with starting switch OFF, then turn starting switch ON and carry out troubleshooting.		
			Wiring harness between BKA (female) (5) – BKAL (female) (1) or circuit branch end and chassis ground	Voltage	Max. 1 V
	5	Defective backup alarm (Internal trouble)	If causes 1 – 4 are not detected, backup alarm may be defective.		

Circuit diagram related to backup alarm

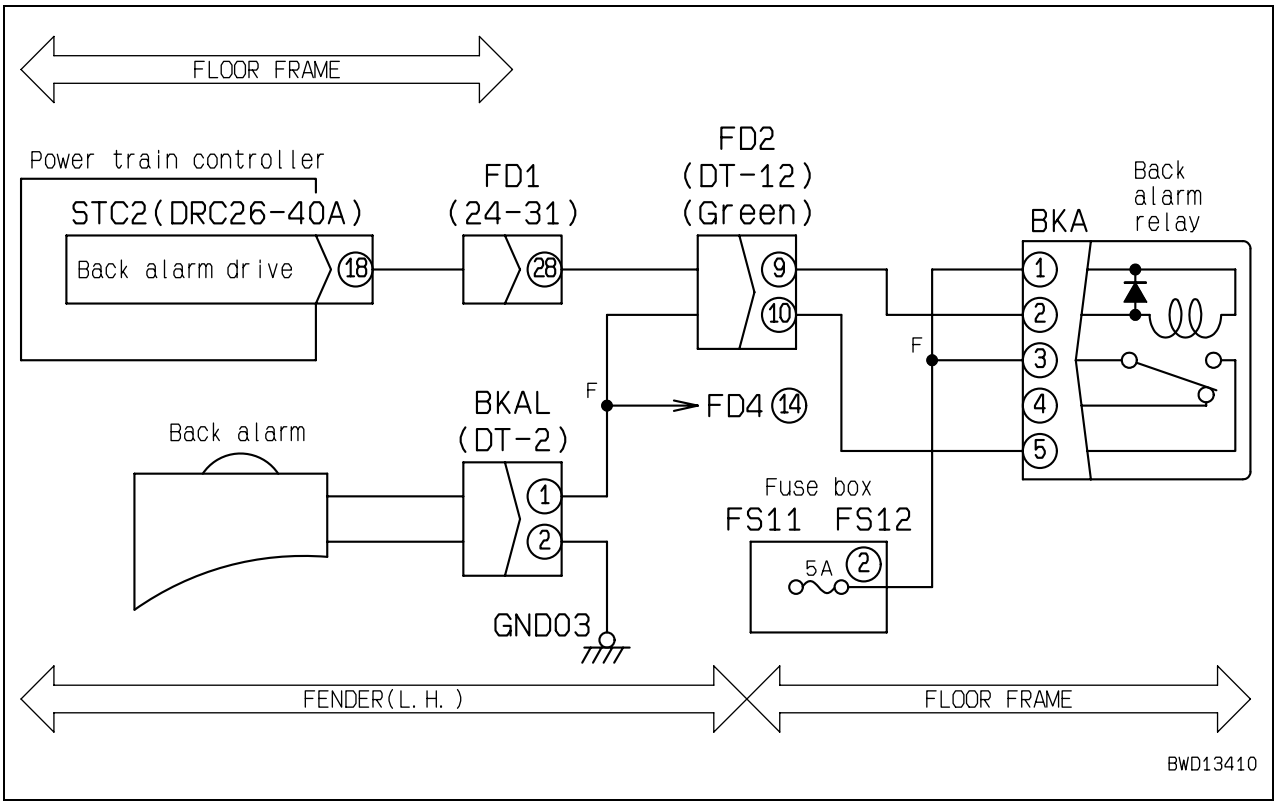

E-25 Headlamp, rear lamp, and ripper point lamp do not light up

Trouble	(1) Headlamp does not light up.
Related information	• Only when headlamp switch is set in "Moon" mark position, screen brightness of machine monitor is changed for night.

<table>
<tr><td rowspan="20">Possible causes and standard value in normal state</td><td colspan="2">Cause</td><td colspan="5">Standard value in normal state/Remarks on troubleshooting</td></tr>
<tr><td>1</td><td>Defective circuit breaker (CB4)</td><td colspan="5">If circuit breaker is turned OFF, circuit probably has ground fault (See cause 8).</td></tr>
<tr><td>2</td><td>Defective headlamp (Broken bulb, default grounding)</td><td colspan="5">Headlamp bulb and ground wire may be defective. Check them directly.</td></tr>
<tr><td rowspan="5">3</td><td rowspan="5">Defective headlamp switch (Internal disconnection)</td><td colspan="5">★ Prepare with starting switch OFF, then carry out troubleshooting without turning starting switch ON.</td></tr>
<tr><td>FLSW (male)</td><td colspan="2">Headlamp switch</td><td colspan="2">Resistance</td></tr>
<tr><td>Between (5) – (4)</td><td colspan="2">Moon mark</td><td colspan="2">Max. 1 Ω</td></tr>
<tr><td>Between (5) – (4)
Between (5) – (6)</td><td colspan="2">Neutral</td><td colspan="2">Min. 1 MΩ</td></tr>
<tr><td>Between (5) – (6)</td><td colspan="2">Sun mark</td><td colspan="2">Max. 1 Ω</td></tr>
<tr><td rowspan="2">4</td><td rowspan="2">Defective left headlamp relay (Internal disconnection or short circuit)</td><td colspan="5">★ Prepare with starting switch OFF, then turn starting switch ON and carry out troubleshooting.</td></tr>
<tr><td colspan="4">Replace left headlamp relay (Right No.) with another relay. If left headlamp becomes normal at this time, left headlamp relay is defective.</td><td>LMFL</td></tr>
<tr><td rowspan="2">5</td><td rowspan="2">Defective right headlamp relay (Internal disconnection or short circuit)</td><td colspan="5">★ Prepare with starting switch OFF, then turn starting switch ON and carry out troubleshooting.</td></tr>
<tr><td colspan="4">Replace right headlamp relay (Right No.) with another relay. If right headlamp becomes normal at this time, right headlamp relay is defective.</td><td>LMFR</td></tr>
<tr><td rowspan="3">6</td><td rowspan="3">Defective assembled-type diode LMD1 or LMD2 (Internal disconnection)</td><td colspan="5">★ Prepare with starting switch OFF, then carry out troubleshooting without turning starting switch ON.</td></tr>
<tr><td colspan="3">LMD1 (male), LMD2 (male)</td><td colspan="2">Continuity</td></tr>
<tr><td colspan="3">Between (2) – (1)</td><td colspan="2">There is continuity</td></tr>
<tr><td rowspan="7">7</td><td rowspan="7">Disconnection in wiring harness (Disconnection in wiring or defective contact in connector)</td><td colspan="5">★ Prepare with starting switch OFF, then carry out troubleshooting without turning starting switch ON.</td></tr>
<tr><td colspan="3">Wiring harness between terminal 270 – FLSW (female) (5)</td><td>Resistance</td><td>Max. 1 Ω</td></tr>
<tr><td colspan="3">Wiring harness between FLSW (female) (4) – LMD1 (female) (2)</td><td>Resistance</td><td>Max. 1 Ω</td></tr>
<tr><td colspan="3">Wiring harness between LMD1 (female) (1), LMD2 (female) (1) – LMFL (female) (1), LMFR (female) (1)</td><td>Resistance</td><td>Max. 1 Ω</td></tr>
<tr><td colspan="3">Wiring harness between LMFL (female) (2), LMFR (female) (2) – chassis ground (GND03)</td><td>Resistance</td><td>Max. 1 Ω</td></tr>
<tr><td colspan="3">Wiring harness between CB4 (2) – LMFL (female) (3), LMFR (female) (3)</td><td>Resistance</td><td>Max. 1 Ω</td></tr>
<tr><td colspan="3">Wiring harness between LMFL (female) (5) – LHDL (female) (1)</td><td>Resistance</td><td>Max. 1 Ω</td></tr>
<tr><td colspan="3">Wiring harness between LMFR (female) (5) – LHDR (female) (1)</td><td>Resistance</td><td>Max. 1 Ω</td></tr>
</table>

	Cause		Standard value in normal state/Remarks on troubleshooting		
Possible causes and standard value in normal state	8	Ground fault in wiring harness (Contact with GND circuit)	★ Prepare with starting switch OFF, then carry out troubleshooting without turning starting switch ON.		
			Wiring harness between terminal 270 – FLSW (female) (5) or circuit branch end and chassis ground	Resistance	Min. 1 MΩ
			Wiring harness between FLSW (female) (4), (3) – LMD1 (female) (2) or CM01 (female) (13) and chassis ground	Resistance	Min. 1 MΩ
			Wiring harness between LMD1 (female) (1), LMD2 (female) (1) – LMFL (female) (1), LMFR (female) (1) and chassis ground	Resistance	Min. 1 MΩ
			Wiring harness between CB4 (2) – LMFL (female) (3), LMFR (female) (3) and chassis ground	Resistance	Min. 1 MΩ
			Wiring harness between LMFL (female) (5) – LHDL (female) (1) and chassis ground	Resistance	Min. 1 MΩ
			Wiring harness between LMFR (female) (5) – LHDR (female) (1) and chassis ground	Resistance	Min. 1 MΩ

Trouble	(2) Rear lamp and ripper point lamp do not light up.
Related information	

	Cause		Standard value in normal state/Remarks on troubleshooting			
Possible causes and standard value in normal state	1	Defective circuit breaker (CB5)	If circuit breaker is turned OFF, circuit probably has ground fault (See cause 8).			
	2	Defective rear lamp (Broken bulb, default grounding)	Rear lamp bulb and ground wire may be defective. Check them directly.			
	3	Defective ripper point lamp (Broken bulb, default grounding)	Ripper point lamp bulb and ground wire may be defective. Check them directly.			
	4	Defective rear lamp switch (Internal disconnection)	★ Prepare with starting switch OFF, then carry out troubleshooting without turning starting switch ON.			
			RLSW (male)	Rear lamp switch	Resistance	
			Between (5) – (6)	OFF	Min. 1 MΩ	
				ON	Max. 1 Ω	
	5	Defective rear lamp relay (Internal disconnection or short circuit)	★ Prepare with starting switch OFF, then turn starting switch ON and carry out troubleshooting.			
			Replace rear lamp relay (Right No.) with another relay. If rear lamp becomes normal at this time, rear lamp relay is defective.		LMRE	
	6	Defective ripper point lamp relay (Internal disconnection or short circuit)	★ Prepare with starting switch OFF, then turn starting switch ON and carry out troubleshooting.			
			Replace ripper point lamp relay (Right No.) with another relay. If ripper point lamp becomes normal at this time, ripper point lamp relay is defective.		LMRP	
	7	Disconnection in wiring harness (Disconnection in wiring or defective contact in connector)	★ Prepare with starting switch OFF, then carry out troubleshooting without turning starting switch ON.			
			Wiring harness between terminal 270 – RLSW (female) (5)		Resistance	Max. 1 Ω
			Wiring harness between RLSW (female) (6) – LMRE (female) (1), LMRP (female) (1)		Resistance	Max. 1 Ω
			Wiring harness between LMRE (female) (2), LMRP (female) (2) – chassis ground (GND03)		Resistance	Max. 1 Ω
			Wiring harness between CB5 (2) – LMRE (female) (3), LMRP (female) (3)		Resistance	Max. 1 Ω
			Wiring harness between LMRE (female) (5) – LREL (female) (1), LRER (female) (1)		Resistance	Max. 1 Ω
			Wiring harness between LREL (female) (2) – chassis ground (GND03)		Resistance	Max. 1 Ω
			Wiring harness between LRER (female) (2) – chassis ground (GND03)		Resistance	Max. 1 Ω
			Wiring harness between LMRP (female) (5) – LRP1 (female) (1)		Resistance	Max. 1 Ω

	Cause		Standard value in normal state/Remarks on troubleshooting		
Possible causes and standard value in normal state	8	Ground fault in wiring harness (Contact with GND circuit)	★ Prepare with starting switch OFF, then carry out troubleshooting without turning starting switch ON.		
			Wiring harness between terminal 270 – RLSW (female) (5) or circuit branch end and chassis ground	Resistance	Min. 1 MΩ
			Wiring harness between RLSW (female) (6), (1) – LMRE (female) (1), LMRP (female) (1) and chassis ground	Resistance	Min. 1 MΩ
			Wiring harness between CB5 (2) – LMRE (female) (3), LMRP (female) (3) and chassis ground	Resistance	Min. 1 MΩ
			Wiring harness between LMRE (female) (5) – LREL (female) (1), LRER (female) (1) and chassis ground	Resistance	Min. 1 MΩ
			Wiring harness between LMRP (female) (5) – LRP1 (female) (1) and chassis ground	Resistance	Min. 1 MΩ

Circuit diagram related to headlamp, rear lamp, and ripper point lamp

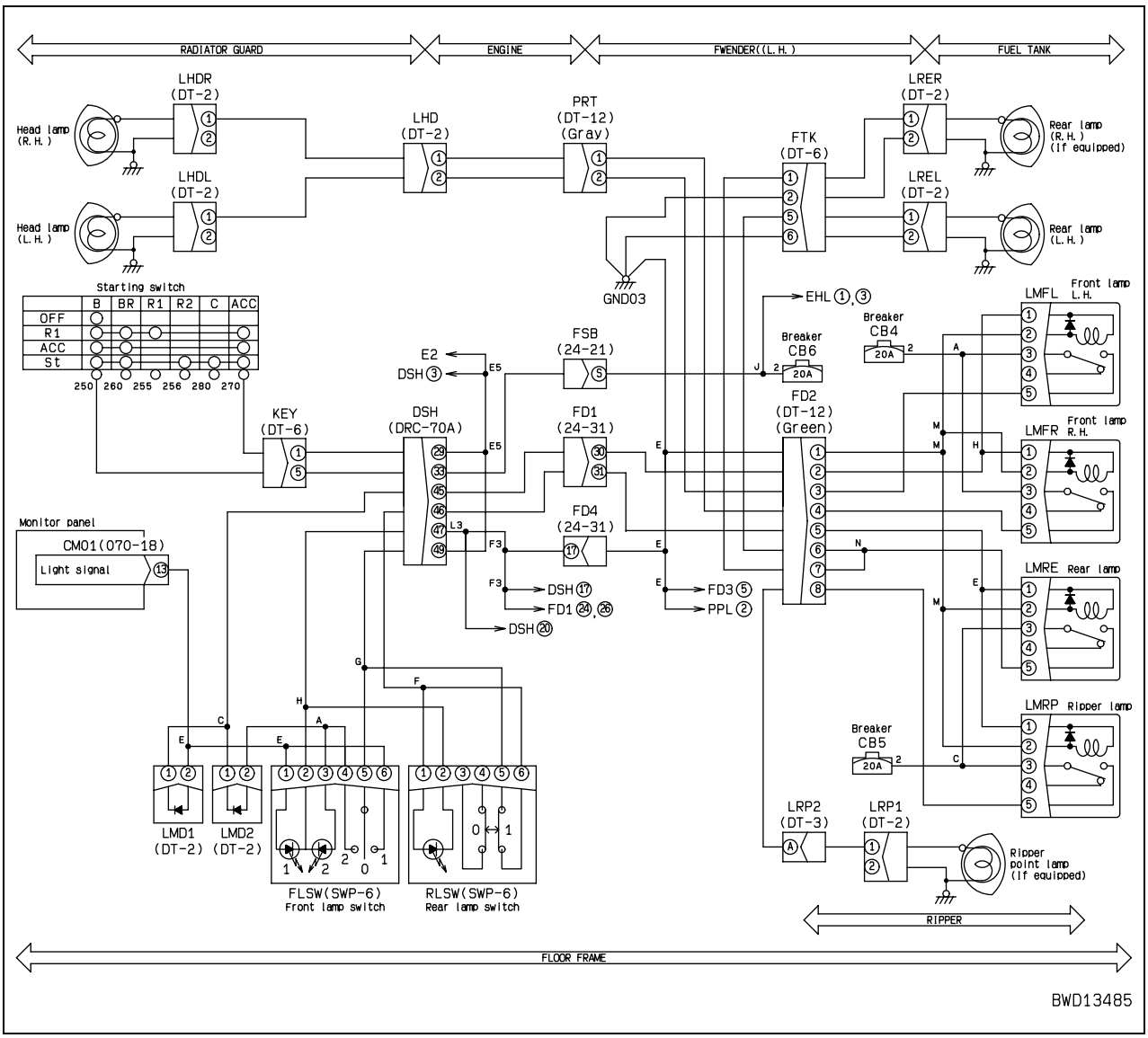

E-26 Windshield wiper and window washer do not operate

Trouble	(1) No windshield wipers and window washers do not operate.
Related information	

	Cause		Standard value in normal state/Remarks on troubleshooting		
Possible causes and standard value in normal state	1	Defective fuse (FS1 – 4 or Ⅱ-4)	If fuse is broken, circuit probably has ground fault (See cause 3).		
	2	Disconnection in wiring harness (Disconnection in wiring or defective contact in connector)	★ Prepare with starting switch OFF, then carry out troubleshooting without turning starting switch ON.		
			Wiring harness between FS12 (4) – fuse Ⅱ (B3)	Resistance	Max. 1 Ω
			Wiring harness between fuse Ⅱ (4) – CN11 (female) (5)	Resistance	Max. 1 Ω
	3	Ground fault in wiring harness (Contact with GND circuit)	★ Prepare with starting switch OFF, then carry out troubleshooting without turning starting switch ON.		
			Wiring harness between FS12 (4) – fuse Ⅱ (B3) and chassis ground	Resistance	Min. 1 MΩ
			Wiring harness between fuse Ⅱ (4) – CN11 (female) (5) and chassis ground	Resistance	Min. 1 MΩ

Trouble	(2) Front windshield wiper does not operate (Continuous operation is defective).
Related information	• If fuse (Ⅱ -5) is broken, operations of both front windshield wiper and rear windshield wiper become defective. • If fuse (Ⅱ -4) is broken, intermittent operation of all windshield wipers becomes defective. • Carry out troubleshooting with front wiper switch ON and intermittent switch OFF.

	Cause		Standard value in normal state/Remarks on troubleshooting			
Possible causes and standard value in normal state	1	Defective fuse (Ⅱ -5)	If fuse is broken, circuit probably has ground fault (See cause 7).			
	2	Defective front wiper motor (Internal trouble)	★ Prepare with starting switch OFF, then turn starting switch ON and carry out troubleshooting.			
			CN23	Front wiper switch	Voltage	
			Between (6) – (1)	ON	20 – 30 V	
			If voltage is normal but wiper does not operate, motor is defective.			
	3	Defective front wiper switch (Internal disconnection)	★ Prepare with starting switch OFF, then carry out troubleshooting without turning starting switch ON.			
			CN14 (male)	Front wiper switch	Resistance	
			Between (2) – (3)	OFF	Min. 1 MΩ	
				ON	Max. 1 Ω	
	4	Defective front wiper intermittent selector relay (Internal trouble)	★ Prepare with starting switch OFF, then turn starting switch ON and carry out troubleshooting.			
			Replace front wiper intermittent selector relay (Right No.) with another relay. If front wiper becomes normal at this time, intermittent selector relay is defective.		CN29	
	5	Defective front wiper intermittent relay (Internal trouble)	★ Prepare with starting switch OFF, then turn starting switch ON and carry out troubleshooting.			
			Replace front wiper intermittent relay (Right No.) with another relay. If front wiper becomes normal at this time, intermittent relay is defective.		CN28	
	6	Disconnection in wiring harness (Disconnection in wiring or defective contact in connector)	★ Prepare with starting switch OFF, then carry out troubleshooting without turning starting switch ON.			
			Wiring harness between fuse Ⅱ (5) – CN14 (female) (3), (5), CN28 (female) (3), or CN23 (female) (3)		Resistance	Max. 1 Ω
			Wiring harness between CN14 (female) (2) – CN29 (female) (3)		Resistance	Max. 1 Ω
			Wiring harness between CN29 (female) (4) – CN28 (female) (4)		Resistance	Max. 1 Ω
			Wiring harness between CN28 (female) (5) – CN23 (female) (6)		Resistance	Max. 1 Ω
			Wiring harness between CN28 (female) (6) – chassis ground (GND3)		Resistance	Max. 1 Ω

Possible causes and standard value in normal state	Cause		Standard value in normal state/Remarks on troubleshooting		
	7	Ground fault in wiring harness (Contact with GND circuit)	★ Prepare with starting switch OFF, then carry out troubleshooting without turning starting switch ON.		
			Wiring harness between fuse Ⅱ (5) – CN14 (female) (3), (5), CN28 (female) (3), CN23 (female) (3), or circuit branch end and chassis ground	Resistance	Min. 1 MΩ
			Wiring harness between CN14 (female) (2) – CN29 (female) (3) and chassis ground	Resistance	Min. 1 MΩ
			Wiring harness between CN29 (female) (4) – CN28 (female) (4) and chassis ground	Resistance	Min. 1 MΩ
			Wiring harness between CN28 (female) (5) – CN23 (female) (6) and chassis ground	Resistance	Min. 1 MΩ

Trouble	(3) Front windshield wiper does not operate intermittently.
Related information	• Before carrying out troubleshooting, check that continuous operation is normal. • If fuse (Ⅱ -4) is broken, intermittent operation of all windshield wipers becomes defective. • Carry out troubleshooting with front wiper switch and intermittent switch ON. • During intermittent operation, wiper stops for 5 seconds after each cycle of operation.

Possible causes and standard value in normal state	Cause		Standard value in normal state/Remarks on troubleshooting		
	1	Defective intermittent switch (Internal disconnection)	★ Prepare with starting switch OFF, then carry out troubleshooting without turning starting switch ON.		
			CN11 (male)	Intermittent switch	Resistance
			Between (5) – (6)	OFF	Min. 1 MΩ
				ON	Max. 1 Ω
	2	Defective front wiper intermittent selector relay (Internal trouble)	★ Prepare with starting switch OFF, then turn starting switch ON and carry out troubleshooting.		
			Replace front wiper intermittent selector relay (Right No.) with another relay. If front wiper becomes normal at this time, intermittent selector relay is defective.		CN29
	3	Defective front wiper intermittent relay (Internal trouble)	★ Prepare with starting switch OFF, then turn starting switch ON and carry out troubleshooting.		
			Replace front wiper intermittent relay (Right No.) with another relay. If front wiper becomes normal at this time, intermittent relay is defective.		CN28
	4	Disconnection in wiring harness (Disconnection in wiring or defective contact in connector)	★ Prepare with starting switch OFF, then carry out troubleshooting without turning starting switch ON.		
			Wiring harness between CN11 (female) (6) – CN29 (female) (1)	Resistance	Max. 1 Ω
			Wiring harness between CN29 (female) (5) – CN28 (female) (2)	Resistance	Max. 1 Ω
			Wiring harness between CN29 (female) (2) – chassis ground (GND3)	Resistance	Max. 1 Ω
	5	Ground fault in wiring harness (Contact with GND circuit)	★ Prepare with starting switch OFF, then carry out troubleshooting without turning starting switch ON.		
			Wiring harness between CN11 (female) (6) – CN29 (female) (1) or circuit branch end and chassis ground	Resistance	Min. 1 MΩ
			Wiring harness between CN29 (female) (5) – CN28 (female) (2) and chassis ground	Resistance	Min. 1 MΩ

Trouble	(4) Rear windshield wiper does not operate (Continuous operation is defective).
Related information	• If fuse (Ⅱ -5) is broken, operations of both front windshield wiper and rear windshield wiper become defective. • If fuse (Ⅱ -4) is broken, intermittent operation of all windshield wipers becomes defective. • Carry out troubleshooting with rear wiper switch ON and intermittent switch OFF.

	Cause		Standard value in normal state/Remarks on troubleshooting			
Possible causes and standard value in normal state	1	Defective fuse (Ⅱ -5)	If fuse is broken, circuit probably has ground fault (See cause 7).			
	2	Defective rear wiper motor (Internal trouble)	★ Prepare with starting switch OFF, then turn starting switch ON and carry out troubleshooting.			
			CN37	Rear wiper switch	Voltage	
			Between (6) – (1)	ON	20 – 30 V	
			If voltage is normal but wiper does not operate, motor is defective.			
	3	Defective rear wiper switch (Internal disconnection)	★ Prepare with starting switch OFF, then carry out troubleshooting without turning starting switch ON.			
			CN12 (male)	Rear wiper switch	Resistance	
			Between (2) – (3)	OFF	Min. 1 MΩ	
				ON	Max. 1 Ω	
	4	Defective rear wiper intermittent selector relay (Internal trouble)	★ Prepare with starting switch OFF, then turn starting switch ON and carry out troubleshooting.			
			Replace rear wiper intermittent selector relay (Right No.) with another relay. If rear wiper becomes normal at this time, intermittent selector relay is defective.		CN33	
	5	Defective rear wiper intermittent relay (Internal trouble)	★ Prepare with starting switch OFF, then turn starting switch ON and carry out troubleshooting.			
			Replace rear wiper intermittent relay (Right No.) with another relay. If rear wiper becomes normal at this time, intermittent relay is defective.		CN32	
	6	Disconnection in wiring harness (Disconnection in wiring or defective contact in connector)	★ Prepare with starting switch OFF, then carry out troubleshooting without turning starting switch ON.			
			Wiring harness between fuse Ⅱ (5) – CN12 (female) (3), (5), CN32 (female) (3), or CN37 (female) (6)		Resistance	Max. 1 Ω
			Wiring harness between CN12 (female) (2) – CN33 (female) (3)		Resistance	Max. 1 Ω
			Wiring harness between CN33 (female) (4) – CN32 (female) (4)		Resistance	Max. 1 Ω
			Wiring harness between CN32 (female) (5) – CN37 (female) (4)		Resistance	Max. 1 Ω
			Wiring harness between CN32 (female) (6) – chassis ground (GND3)		Resistance	Max. 1 Ω

Possible causes and standard value in normal state	Cause		Standard value in normal state/Remarks on troubleshooting		
	7	Ground fault in wiring harness (Contact with GND circuit)	★ Prepare with starting switch OFF, then carry out troubleshooting without turning starting switch ON.		
			Wiring harness between fuse Ⅱ (5) – CN12 (female) (3), (5), CN32 (female) (3), CN37 (female) (6), or circuit branch end and chassis ground	Resistance	Min. 1 MΩ
			Wiring harness between CN12 (female) (2) – CN33 (female) (3) and chassis ground	Resistance	Min. 1 MΩ
			Wiring harness between CN33 (female) (4) –- CN32 (female) (4) and chassis ground	Resistance	Min. 1 MΩ
			Wiring harness between CN32 (female) (5) – CN37 (female) (4) and chassis ground	Resistance	Min. 1 MΩ

Trouble	(5) Rear windshield wiper does not operate intermittently.
Related information	• Before carrying out troubleshooting, check that continuous operation is normal. • If fuse (Ⅱ -4) is broken, intermittent operation of all windshield wipers becomes defective. • Carry out troubleshooting with rear wiper switch and intermittent switch ON. • During intermittent operation, wiper stops for 5 seconds after each cycle of operation.

Possible causes and standard value in normal state	Cause		Standard value in normal state/Remarks on troubleshooting		
	1	Defective intermittent switch (Internal disconnection)	★ Prepare with starting switch OFF, then carry out troubleshooting without turning starting switch ON.		
			CN11 (male)	Intermittent switch	Resistance
			Between (5) – (6)	OFF	Min. 1 MΩ
				ON	Max. 1 Ω
	2	Defective rear wiper intermittent selector relay (Internal trouble)	★ Prepare with starting switch OFF, then turn starting switch ON and carry out troubleshooting.		
			Replace rear wiper intermittent selector relay (Right No.) with another relay. If rear wiper becomes normal at this time, intermittent selector relay is defective.		CN33
	3	Defective rear wiper intermittent relay (Internal trouble)	★ Prepare with starting switch OFF, then turn starting switch ON and carry out troubleshooting.		
			Replace rear wiper intermittent relay (Right No.) with another relay. If rear wiper becomes normal at this time, intermittent relay is defective.		CN32
	4	Disconnection in wiring harness (Disconnection in wiring or defective contact in connector)	★ Prepare with starting switch OFF, then carry out troubleshooting without turning starting switch ON.		
			Wiring harness between CN11 (female) (6) – CN33 (female) (1)	Resistance	Max. 1 Ω
			Wiring harness between CN33 (female) (5) – CN32 (female) (2)	Resistance	Max. 1 Ω
			Wiring harness between CN33 (female) (2) – chassis ground (GND3)	Resistance	Max. 1 Ω
	5	Ground fault in wiring harness (Contact with GND circuit)	★ Prepare with starting switch OFF, then carry out troubleshooting without turning starting switch ON.		
			Wiring harness between CN11 (female) (6) – CN33 (female) (1) or circuit branch end and chassis ground	Resistance	Min. 1 MΩ
			Wiring harness between CN33 (female) (5) – CN32 (female) (2) and chassis ground	Resistance	Min. 1 MΩ

Trouble	(6) Right door wiper does not operate (Continuous operation is defective).
Related information	• If fuse (Ⅱ -6) is broken, operations of both right door wiper and left door wiper become defective. • If fuse (Ⅱ -4) is broken, intermittent operation of all windshield wipers becomes defective. • Carry out troubleshooting with right door wiper switch ON and intermittent switch OFF.

	Cause		Standard value in normal state/Remarks on troubleshooting			
Possible causes and standard value in normal state	1	Defective fuse (Ⅱ -6)	If fuse is broken, circuit probably has ground fault (See cause 7).			
	2	Defective right door wiper motor (Internal trouble)	★ Prepare with starting switch OFF, then turn starting switch ON and carry out troubleshooting.			
			CN17	Right door wiper switch	Voltage	
			Between (3) – (1)	ON	20 – 30 V	
			If voltage is normal but wiper does not operate, motor is defective.			
	3	Defective right door wiper switch (Internal disconnection)	★ Prepare with starting switch OFF, then carry out troubleshooting without turning starting switch ON.			
			CN13 (male)	Right door wiper switch	Resistance	
			Between (2) – (3)	OFF	Min. 1 MΩ	
				ON	Max. 1 Ω	
	4	Defective right door wiper intermittent selector relay (Internal trouble)	★ Prepare with starting switch OFF, then turn starting switch ON and carry out troubleshooting.			
			Replace right door wiper intermittent selector relay (Right No.) with another relay. If right door wiper becomes normal at this time, intermittent selector relay is defective.		CN31	
	5	Defective right door wiper intermittent relay (Internal trouble)	★ Prepare with starting switch OFF, then turn starting switch ON and carry out troubleshooting.			
			Replace right door wiper intermittent relay (Right No.) with another relay. If right door wiper becomes normal at this time, intermittent relay is defective.		CN30	
	6	Disconnection in wiring harness (Disconnection in wiring or defective contact in connector)	★ Prepare with starting switch OFF, then carry out troubleshooting without turning starting switch ON.			
			Wiring harness between fuse Ⅱ (6) – CN13 (female) (3), (5) or CN17 (female) (4)		Resistance	Max. 1 Ω
			Wiring harness between fuse Ⅱ (6) – CN30 (female) (3)		Resistance	Max. 1 Ω
			Wiring harness between CN13 (female) (2) – CN31 (female) (3)		Resistance	Max. 1 Ω
			Wiring harness between CN31 (female) (4) – CN30 (female) (4)		Resistance	Max. 1 Ω
			Wiring harness between CN30 (female) (5) – CN17 (female) (3)		Resistance	Max. 1 Ω
			Wiring harness between CN30 (female) (6) – chassis ground (GND3)		Resistance	Max. 1 Ω
			Wiring harness between CN17 (female) (1) – chassis ground (GND1)		Resistance	Max. 1 Ω

	Cause		Standard value in normal state/Remarks on troubleshooting		
Possible causes and standard value in normal state	7	Ground fault in wiring harness (Contact with GND circuit)	★ Prepare with starting switch OFF, then carry out troubleshooting without turning starting switch ON.		
			Wiring harness between fuse Ⅱ (6) – CN13 (female) (3), (5), CN17 (female) (4), or circuit branch end and chassis ground	Resistance	Min. 1 MΩ
			Wiring harness between fuse Ⅱ (6) – CN30 (female) (3) or circuit branch end and chassis ground	Resistance	Min. 1 MΩ
			Wiring harness between CN13 (female) (2) – CN31 (female) (3) and chassis ground	Resistance	Min. 1 MΩ
			Wiring harness between CN31 (female) (4) – CN30 (female) (4) and chassis ground	Resistance	Min. 1 MΩ
			Wiring harness between CN30 (female) (5) – CN17 (female) (3) and chassis ground	Resistance	Min. 1 MΩ

Trouble	(7) Right door wiper does not operate intermittently.
Related information	• Before carrying out troubleshooting, check that continuous operation is normal. • If fuse (Ⅱ -4) is broken, intermittent operation of all windshield wipers becomes defective. • Carry out troubleshooting with right door wiper switch and intermittent switch ON. • During intermittent operation, wiper stops for 5 seconds after each cycle of operation.

<table>
<tr><td rowspan="15">Possible causes and standard value in normal state</td><td colspan="2">Cause</td><td colspan="4">Standard value in normal state/Remarks on troubleshooting</td></tr>
<tr><td rowspan="3">1</td><td rowspan="3">Defective intermittent switch (Internal disconnection)</td><td colspan="4">★ Prepare with starting switch OFF, then carry out troubleshooting without turning starting switch ON.</td></tr>
<tr><td>CN11 (male)</td><td>Intermittent switch</td><td colspan="2">Resistance</td></tr>
<tr><td rowspan="2">Between (5) – (6)</td><td>OFF</td><td colspan="2">Min. 1 MΩ</td></tr>
<tr><td>ON</td><td colspan="2">Max. 1 Ω</td></tr>
<tr><td rowspan="2">2</td><td rowspan="2">Defective right door wiper intermittent selector relay (Internal trouble)</td><td colspan="4">★ Prepare with starting switch OFF, then turn starting switch ON and carry out troubleshooting.</td></tr>
<tr><td colspan="3">Replace right door wiper intermittent selector relay (Right No.) with another relay. If right door wiper becomes normal at this time, intermittent selector relay is defective.</td><td>CN31</td></tr>
<tr><td rowspan="2">3</td><td rowspan="2">Defective right door wiper intermittent relay (Internal trouble)</td><td colspan="4">★ Prepare with starting switch OFF, then turn starting switch ON and carry out troubleshooting.</td></tr>
<tr><td colspan="3">Replace right door wiper intermittent relay (Right No.) with another relay. If right door wiper becomes normal at this time, intermittent relay is defective.</td><td>CN30</td></tr>
<tr><td rowspan="4">4</td><td rowspan="4">Disconnection in wiring harness (Disconnection in wiring or defective contact in connector)</td><td colspan="4">★ Prepare with starting switch OFF, then carry out troubleshooting without turning starting switch ON.</td></tr>
<tr><td colspan="2">Wiring harness between CN11 (female) (6) – CN31 (female) (1)</td><td>Resistance</td><td>Max. 1 Ω</td></tr>
<tr><td colspan="2">Wiring harness between CN31 (female) (5) – CN30 (female) (2)</td><td>Resistance</td><td>Max. 1 Ω</td></tr>
<tr><td colspan="2">Wiring harness between CN31 (female) (2) – chassis ground (GND3)</td><td>Resistance</td><td>Max. 1 Ω</td></tr>
<tr><td rowspan="3">5</td><td rowspan="3">Ground fault in wiring harness (Contact with GND circuit)</td><td colspan="4">★ Prepare with starting switch OFF, then carry out troubleshooting without turning starting switch ON.</td></tr>
<tr><td colspan="2">Wiring harness between CN11 (female) (6) – CN31 (female) (1) or circuit branch end and chassis ground</td><td>Resistance</td><td>Min. 1 MΩ</td></tr>
<tr><td colspan="2">Wiring harness between CN31 (female) (5) – CN30 (female) (2) and chassis ground</td><td>Resistance</td><td>Min. 1 MΩ</td></tr>
</table>

Trouble	(8) Left door wiper does not operate (Continuous operation is defective).
Related information	• If fuse (Ⅱ -6) is broken, operations of both right door wiper and left door wiper become defective. • If fuse (Ⅱ -4) is broken, intermittent operation of all windshield wipers becomes defective. • Carry out troubleshooting with left door wiper switch ON and intermittent switch OFF.

	Cause		Standard value in normal state/Remarks on troubleshooting			
Possible causes and standard value in normal state	1	Defective fuse (Ⅱ -6)	If fuse is broken, circuit probably has ground fault (See cause 7).			
	2	Defective left door wiper motor (Internal trouble)	★ Prepare with starting switch OFF, then turn starting switch ON and carry out troubleshooting.			
			CN24	Left door wiper switch	Voltage	
			Between (3) – (1)	ON	20 – 30 V	
			If voltage is normal but wiper does not operate, motor is defective.			
	3	Defective left door wiper switch (Internal disconnection)	★ Prepare with starting switch OFF, then carry out troubleshooting without turning starting switch ON.			
			CN15 (male)	Left door wiper switch	Resistance	
			Between (2) – (3)	OFF	Min. 1 MΩ	
				ON	Max. 1 Ω	
	4	Defective left door wiper intermittent selector relay (Internal trouble)	★ Prepare with starting switch OFF, then turn starting switch ON and carry out troubleshooting.			
			Replace left door wiper intermittent selector relay (Right No.) with another relay. If left door wiper becomes normal at this time, intermittent selector relay is defective.		CN27	
	5	Defective left door wiper intermittent relay (Internal trouble)	★ Prepare with starting switch OFF, then turn starting switch ON and carry out troubleshooting.			
			Replace left door wiper intermittent relay (Right No.) with another relay. If left door wiper becomes normal at this time, intermittent relay is defective.		CN26	
	6	Disconnection in wiring harness (Disconnection in wiring or defective contact in connector)	★ Prepare with starting switch OFF, then carry out troubleshooting without turning starting switch ON.			
			Wiring harness between fuse Ⅱ (6) – CN15 (female) (3), (5)		Resistance	Max. 1 Ω
			Wiring harness between fuse Ⅱ (6) – CN26 (female) (3) or CN24 (female) (4)		Resistance	Max. 1 Ω
			Wiring harness between CN15 (female) (2) – CN27 (female) (3)		Resistance	Max. 1 Ω
			Wiring harness between CN27 (female) (4) – CN26 (female) (4)		Resistance	Max. 1 Ω
			Wiring harness between CN26 (female) (5) – CN24 (female) (3)		Resistance	Max. 1 Ω
			Wiring harness between CN26 (female) (6) – chassis ground (GND3)		Resistance	Max. 1 Ω
			Wiring harness between CN24 (female) (1) – chassis ground (GND3)		Resistance	Max. 1 Ω

	Cause		Standard value in normal state/Remarks on troubleshooting		
Possible causes and standard value in normal state	7	Ground fault in wiring harness (Contact with GND circuit)	★ Prepare with starting switch OFF, then carry out troubleshooting without turning starting switch ON.		
			Wiring harness between fuse Ⅱ (6) – CN15 (female) (3), (5) or circuit branch end and chassis ground	Resistance	Min. 1 MΩ
			Wiring harness between fuse Ⅱ (6) – CN26 (female) (3), CN24 (female) (4) or circuit branch end and chassis ground	Resistance	Min. 1 MΩ
			Wiring harness between CN15 (female) (2) – CN27 (female) (3) and chassis ground	Resistance	Min. 1 MΩ
			Wiring harness between CN27 (female) (4) – CN26 (female) (4) and chassis ground	Resistance	Min. 1 MΩ
			Wiring harness between CN26 (female) (5) – CN24 (female) (3) and chassis ground	Resistance	Min. 1 MΩ

Trouble	(9) Left door wiper does not operate intermittently.
Related information	• Before carrying out troubleshooting, check that continuous operation is normal. • If fuse (Ⅱ -4) is broken, intermittent operation of all windshield wipers becomes defective. • Carry out troubleshooting with left door wiper switch and intermittent switch ON. • During intermittent operation, wiper stops for 5 seconds after each cycle of operation.

	Cause		Standard value in normal state/Remarks on troubleshooting			
Possible causes and standard value in normal state	1	Defective intermittent switch (Internal disconnection)	★ Prepare with starting switch OFF, then carry out troubleshooting without turning starting switch ON.			
			CN11 (male)	Intermittent switch	Resistance	
			Between (5) – (6)	OFF	Min. 1 MΩ	
				ON	Max. 1 Ω	
	2	Defective left door wiper intermittent selector relay (Internal trouble)	★ Prepare with starting switch OFF, then turn starting switch ON and carry out troubleshooting.			
			Replace left door wiper intermittent selector relay (Right No.) with another relay. If left door wiper becomes normal at this time, intermittent selector relay is defective.		CN27	
	3	Defective left door wiper intermittent relay (Internal trouble)	★ Prepare with starting switch OFF, then turn starting switch ON and carry out troubleshooting.			
			Replace left door wiper intermittent relay (Right No.) with another relay. If left door wiper becomes normal at this time, intermittent relay is defective.		CN26	
	4	Disconnection in wiring harness (Disconnection in wiring or defective contact in connector)	★ Prepare with starting switch OFF, then carry out troubleshooting without turning starting switch ON.			
			Wiring harness between CN11 (female) (6) – CN27 (female) (1)		Resistance	Max. 1 Ω
			Wiring harness between CN27 (female) (5) – CN26 (female) (2)		Resistance	Max. 1 Ω
			Wiring harness between CN27 (female) (2) – chassis ground (GND3)		Resistance	Max. 1 Ω
	5	Ground fault in wiring harness (Contact with GND circuit)	★ Prepare with starting switch OFF, then carry out troubleshooting without turning starting switch ON.			
			Wiring harness between CN11 (female) (6) – CN27 (female) (1) or circuit branch end and chassis ground		Resistance	Min. 1 MΩ
			Wiring harness between CN27 (female) (5) – CN26 (female) (2) and chassis ground		Resistance	Min. 1 MΩ

Trouble	(10) Water does not come out from front window washer.
Related information	• Before carrying out troubleshooting, check that windshield wiper operates normally. • If fuse (Ⅱ -5) is broken, operations of both front window washer and rear window washer become defective.

	Cause		Standard value in normal state/Remarks on troubleshooting			
Possible causes and standard value in normal state	1	Defective fuse (Ⅱ -5)	If fuse is broken, circuit probably has ground fault (See cause 5).			
	2	Defective front window washer motor (Internal trouble)	★ Prepare with starting switch OFF, then turn starting switch ON and carry out troubleshooting.			
			WSH1	Front wiper switch	Voltage	
			Between (3) – (4)	ON (Wash position)	20 – 30 V	
			If voltage is normal but washer does not operate, motor is defective.			
	3	Defective front wiper switch (Internal disconnection)	★ Prepare with starting switch OFF, then carry out troubleshooting without turning starting switch ON.			
			CN14 (male)	Front wiper switch	Resistance	
			Between (5) – (6)	OFF	Min. 1 MΩ	
				ON (Wash position)	Max. 1 Ω	
	4	Disconnection in wiring harness (Disconnection in wiring or defective contact in connector)	★ Prepare with starting switch OFF, then carry out troubleshooting without turning starting switch ON.			
			Wiring harness between fuse Ⅱ (5) – CN14 (female) (3), (5)		Resistance	Max. 1 Ω
			Wiring harness between CN14 (female) (6) – WSH1 (female) (3)		Resistance	Max. 1 Ω
			Wiring harness between WSH1 (female) (4) – chassis ground (GND06)		Resistance	Max. 1 Ω
	5	Ground fault in wiring harness (Contact with GND circuit)	★ Prepare with starting switch OFF, then carry out troubleshooting without turning starting switch ON.			
			Wiring harness between fuse Ⅱ (5) – CN14 (female) (3), (5) or circuit branch end and chassis ground		Resistance	Min. 1 MΩ
			Wiring harness between CN14 (female) (6) – WSH1 (female) (3) and chassis ground		Resistance	Min. 1 MΩ

Trouble	(11) Water does not come out from rear window washer.
Related information	• Before carrying out troubleshooting, check that windshield wiper operates normally. • If fuse (Ⅱ -5) is broken, operations of both front window washer and rear window washer become defective.

Possible causes and standard value in normal state	Cause		Standard value in normal state/Remarks on troubleshooting			
	1	Defective fuse (Ⅱ -5)	If fuse is broken, circuit probably has ground fault (See cause 5).			
	2	Defective rear window washer motor (Internal trouble)	★ Prepare with starting switch OFF, then turn starting switch ON and carry out troubleshooting.			
			WSH2	Rear wiper switch	Voltage	
			Between (3) – (4)	ON (Wash position)	20 – 30 V	
			If voltage is normal but washer does not operate, motor is defective.			
	3	Defective rear wiper switch (Internal disconnection)	★ Prepare with starting switch OFF, then carry out troubleshooting without turning starting switch ON.			
			CN12 (male)	Rear wiper switch	Resistance	
			Between (5) – (6)	OFF	Min. 1 MΩ	
				ON (Wash position)	Max. 1 Ω	
	4	Disconnection in wiring harness (Disconnection in wiring or defective contact in connector)	★ Prepare with starting switch OFF, then carry out troubleshooting without turning starting switch ON.			
			Wiring harness between fuse Ⅱ (5) – CN12 (female) (3), (5)		Resistance	Max. 1 Ω
			Wiring harness between CN12 (female) (6) – WSH2 (female) (3)		Resistance	Max. 1 Ω
			Wiring harness between WSH2 (female) (4) – chassis ground (GND06)		Resistance	Max. 1 Ω
	5	Ground fault in wiring harness (Contact with GND circuit)	★ Prepare with starting switch OFF, then carry out troubleshooting without turning starting switch ON.			
			Wiring harness between fuse Ⅱ (5) – CN12 (female) (3), (5) or circuit branch end and chassis ground		Resistance	Min. 1 MΩ
			Wiring harness between CN12 (female) (6) – WSH2 (female) (3) and chassis ground		Resistance	Min. 1 MΩ

Trouble	(12) Water does not come out from right door washer.
Related information	• Before carrying out troubleshooting, check that windshield wiper operates normally. • If fuse (Ⅱ -6) is broken, operations of both right door washer and left door washer become defective.

	Cause		Standard value in normal state/Remarks on troubleshooting			
Possible causes and standard value in normal state	1	Defective fuse (Ⅱ -6)	If fuse is broken, circuit probably has ground fault (See cause 5).			
	2	Defective right door washer motor (Internal trouble)	★ Prepare with starting switch OFF, then turn starting switch ON and carry out troubleshooting			
			WSH2	Right door wiper switch	Voltage	
			Between (1) – (2)	ON (Wash position)	20 – 30 V	
			If voltage is normal but washer does not operate, motor is defective.			
	3	Defective right door wiper switch (Internal disconnection)	★ Prepare with starting switch OFF, then carry out troubleshooting without turning starting switch ON.			
			CN13 (male)	Right door wiper switch	Resistance	
			Between (5) – (6)	OFF	Min. 1 MΩ	
				ON (Wash position)	Max. 1 Ω	
	4	Disconnection in wiring harness (Disconnection in wiring or defective contact in connector)	★ Prepare with starting switch OFF, then carry out troubleshooting without turning starting switch ON.			
			Wiring harness between fuse Ⅱ (6) – CN13 (female) (3), (5)		Resistance	Max. 1 Ω
			Wiring harness between CN13 (female) (6) – WSH2 (female) (1)		Resistance	Max. 1 Ω
			Wiring harness between WSH2 (female) (2) – chassis ground (GND06)		Resistance	Max. 1 Ω
	5	Ground fault in wiring harness (Contact with GND circuit)	★ Prepare with starting switch OFF, then carry out troubleshooting without turning starting switch ON.			
			Wiring harness between fuse Ⅱ (6) – CN13 (female) (3), (5) or circuit branch end and chassis ground		Resistance	Min. 1 MΩ
			Wiring harness between CN13 (female) (6) – WSH2 (female) (1) and chassis ground		Resistance	Min. 1 MΩ

Trouble	(13) Water does not come out from left door washer.
Related information	• Before carrying out troubleshooting, check that windshield wiper operates normally. • If fuse (Ⅱ -6) is broken, operations of both right door washer and left door washer become defective.

	Cause		Standard value in normal state/Remarks on troubleshooting			
Possible causes and standard value in normal state	1	Defective fuse (Ⅱ -6)	If fuse is broken, circuit probably has ground fault (See cause 5).			
	2	Defective left door washer motor (Internal trouble)	★ Prepare with starting switch OFF, then turn starting switch ON and carry out troubleshooting.			
			WSH1	Left door wiper switch	Voltage	
			Between (1) – (2)	ON (Wash position)	20 – 30 V	
			If voltage is normal but washer does not operate, motor is defective.			
	3	Defective left door wiper switch (Internal disconnection)	★ Prepare with starting switch OFF, then carry out troubleshooting without turning starting switch ON.			
			CN15 (male)	Left door wiper switch	Resistance	
			Between (5) – (6)	OFF	Min. 1 MΩ	
				ON (Wash position)	Max. 1 Ω	
	4	Disconnection in wiring harness (Disconnection in wiring or defective contact in connector)	★ Prepare with starting switch OFF, then carry out troubleshooting without turning starting switch ON.			
			Wiring harness between fuse Ⅱ (6) – CN15 (female) (3), (5)		Resistance	Max. 1 Ω
			Wiring harness between CN15 (female) (6) – WSH1 (female) (1)		Resistance	Max. 1 Ω
			Wiring harness between WSH1 (female) (2) – chassis ground (GND06)		Resistance	Max. 1 Ω
	5	Ground fault in wiring harness (Contact with GND circuit)	★ Prepare with starting switch OFF, then carry out troubleshooting without turning starting switch ON.			
			Wiring harness between fuse Ⅱ (6) – CN15 (female) (3), (5) or circuit branch end and chassis ground		Resistance	Min. 1 MΩ
			Wiring harness between CN15 (female) (6) – WSH1 (female) (1) and chassis ground		Resistance	Min. 1 MΩ

Circuit diagram related to windshield wiper and window washer

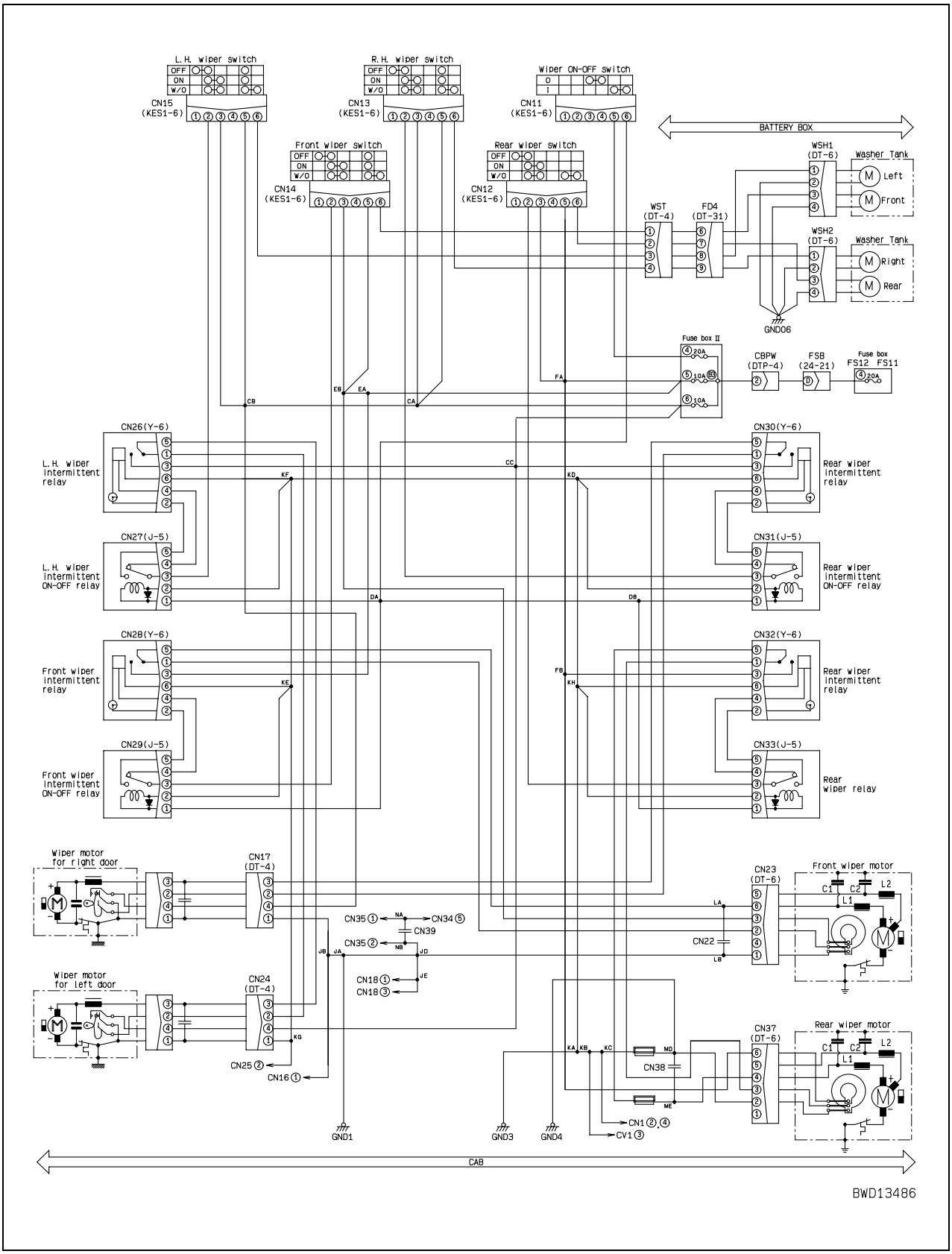

E-27 KOMTRAX system does not operate normally

Trouble	• KOMTRAX system does not operate normally.
Related information	• If KOMTRAX system administrator makes request for checking system on machine side for trouble, carry out following troubleshooting. • Even if KOMTRAX system has trouble, it does not particularly appear on machine. • Carry out all troubleshooting on service menu screen of machine monitor.

	Cause		Standard value in normal state/Remarks on troubleshooting	
Possible causes and standard value in normal state	1	Defective transmission 1	★ Turn starting switch ON and check "Setting condition of terminal" screen.	
			Check item	Normal display
			Communication start check	Completion
	2	Defective GPS	★ Turn starting switch ON and check "Condition of positioning and communication" screen.	
			Check item	Normal display
			Positioning	N ###,##,##(Latitude)
				E ###,##,##(Longitude)
				In positioning
			If latitude and longitude are not displayed in 5 minutes on open ground, notify KOMTRAX service hot line.	
	3	Defective communication environment	★ Turn starting switch ON and check "Condition of positioning and communication" screen.	
			Check item	Normal display
			Communication	Zone level 1 – Zone level 3
			If zone level 1 – 3 is not displayed within communication zone of ORBCOMM, notify KOMTRAX service hot line.	
	4	Defective transmission 2	★ Turn starting switch ON and check "Condition of positioning and communication" screen.	
			Check item	Normal display
			Number of items not transmitted	0 – 9 (Normally 0)

★ Select "Setting condition of terminal" from "12 Display of KOMTRAX setting" in the service menu of the machine monitor.

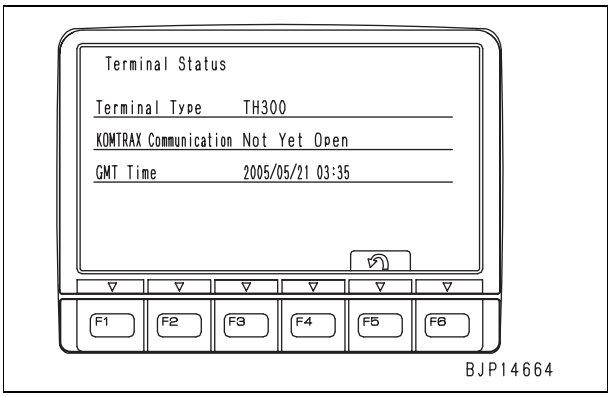

★ Select "Condition of positioning and communication" from "12 Display of KOMTRAX setting" in the service menu of the machine monitor.

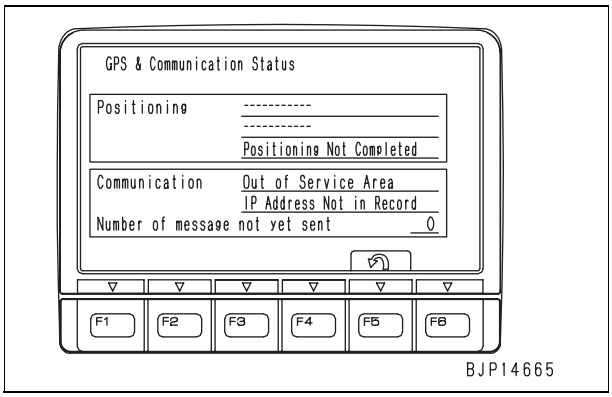

D155AX-6 Bulldozer

Form No. SEN00807-01

© 2006 KOMATSU
All Rights Reserved
Printed in Japan 05-06 (02)

BULLDOZER

D155AX-6

Machine model	Serial number
D155AX-6	80001 and up

40 Troubleshooting

Troubleshooting of hydraulic and mechanical system (H-mode)

Troubleshooting of hydraulic and mechanical system (H-mode) 3
Information in troubleshooting table 3
H-1 Power is low (Drawbar pull is low) 4
H-2 Machine does not travel (at 2nd or 3rd gear speed) 5
H-3 Machine does not start at any gear speed 6
H-4 Machine can travel only forward or in reverse 7
H-5 When gear speed or travel direction is changed, time lag is large 8
H-6 Machine cannot be steered (Machine does not turn right or left) 9
H-7 Steering speed or steering force is low 9
H-8 Brake does not work 10
H-9 Power train oil is overheated 11
H-10 Abnormal sound comes out from around HSS pump or HSS motor 12
H-11 Speed of all work equipment is low 13
H-12 No work equipment moves 14

H-13 Blade lift speed or power is low 15
H-14 Blade tilt speed or power is low 16
H-15 Ripper lift speed or power is low 17
H-16 Ripper tilt speed or power is low 18
H-17 Hydraulic drift of blade lift is large 18
H-18 Hydraulic drift of blade tilt is large 19
H-19 Hydraulic drift of ripper lift is large 19
H-20 Ripper pin puller cylinder does not operate 20
H-21 Blade does not pitch 20
H-22 Abnormal sound comes out from around work equipment pump 21

Troubleshooting of hydraulic and mechanical system (H-mode)

Information in troubleshooting table

★ The following information is summarized in the troubleshooting table. Before carrying out troubleshooting, understand that information fully.

Trouble	**Trouble which occurred in the machine**
Related information	**Information related to detected trouble or troubleshooting**

	Cause		Standard value in normal state/Remarks on troubleshooting
Possible causes and standard value in normal state	1	**Possible causes of trouble (Given numbers are reference numbers, which do not indicate priority)**	**<Contents of description>** • **Standard value in normal state to judge possible causes** • **Remarks on judgment**
	2		
	3		
	4		

H-1 Power is low (Drawbar pull is low)

Trouble	• Power is low (Drawbar pull is low).
Related information	• Before carrying out troubleshooting, check that power train oil level is normal.

<table>
<tr><td rowspan="15">Possible causes and standard value in normal state</td><td colspan="2">Cause</td><td colspan="4">Standard value in normal state/Remarks on troubleshooting</td></tr>
<tr><td rowspan="3">1</td><td rowspan="3">Defective engine</td><td colspan="4">★ Prepare with engine stopped, then run engine at high idle and carry out troubleshooting.</td></tr>
<tr><td colspan="2">PCCS lever</td><td colspan="2">Engine speed</td></tr>
<tr><td colspan="2">F3 stall</td><td colspan="2">1,450 rpm</td></tr>
<tr><td>2</td><td>Defective power train pump</td><td colspan="4">Power train pump may be defective. Check it directly.</td></tr>
<tr><td rowspan="3">3</td><td rowspan="3">Trouble in torque converter</td><td colspan="4">Prepare with starting switch ON, then run engine at high idle and carry out troubleshooting.</td></tr>
<tr><td>PCCS lever</td><td>Torque converter inlet pressure</td><td colspan="2">Torque converter outlet pressure</td></tr>
<tr><td>Neutral</td><td>Max. 1.0 MPa {Max. 10.0 kg/cm²}</td><td colspan="2">0.29 – 0.69 MPa {3.0 – 7.0 kg/cm²}</td></tr>
<tr><td rowspan="4">4</td><td rowspan="4">Improper set pressure or internal trouble of transmission main relief valve</td><td colspan="4">★ Prepare with engine stopped, then run engine at high idle and carry out troubleshooting.</td></tr>
<tr><td>PCCS lever</td><td colspan="2">Transmission main relief pressure</td></tr>
<tr><td>Neutral</td><td>TM</td><td colspan="2">Min. 2.84 MPa {Min. 29.0 kg/cm²}</td></tr>
<tr><td colspan="4">★ Prepare with engine stopped, then keep engine stopped and carry out troubleshooting.
Check directly that free length of spring and number of shims are normal and spool moves smoothly.
• Free length of spring (large): 122 mm
• Free length of spring (small): 108 mm
• Number of shims: 6</td></tr>
<tr><td rowspan="6">5</td><td rowspan="6">Malfunction of transmission clutch valve (ECMV)</td><td colspan="4">★ Prepare with engine stopped, then run engine at low idle and carry out troubleshooting.</td></tr>
<tr><td>PCCS lever</td><td>Transmission clutch</td><td colspan="2">Clutch pressure</td></tr>
<tr><td>F3 stall</td><td>F</td><td colspan="2">Min. 2.26 MPa {Min. 23.0 kg/cm²}</td></tr>
<tr><td>R3 stall</td><td>R</td><td colspan="2">Min. 2.45 MPa {Min. 25.0 kg/cm²}</td></tr>
<tr><td>F1 stall</td><td>1ST</td><td colspan="2">Min. 2.62 MPa {Min. 26.7 kg/cm²}</td></tr>
<tr><td>F2 stall</td><td>2ND</td><td colspan="2">Min. 2.40 MPa {Min. 24.5 kg/cm²}</td></tr>
<tr><td rowspan="3">6</td><td rowspan="3">Defective brake valve</td><td colspan="4">Prepare with engine stopped, then run engine at high idle and carry out troubleshooting.</td></tr>
<tr><td>Parking brake lever</td><td>Steering brake</td><td colspan="2">Brake oil pressure</td></tr>
<tr><td>Free</td><td>RB
LB</td><td colspan="2">2.16 MPa {22.0 kg/cm²}</td></tr>
<tr><td>7</td><td>Defective adjustment of parking brake lever or brake pedal linkage</td><td colspan="4">If check result of cause 6 is abnormal, parking brake lever or brake pedal linkage is adjusted defectively. Check them directly.</td></tr>
<tr><td>8</td><td>Trouble in transmission</td><td colspan="4">Transmission may have trouble in it. Check it directly.</td></tr>
</table>

H-2 Machine does not travel (at 2nd or 3rd gear speed)

Trouble	• Machine does not travel (at 2nd or 3rd gear speed).
Related information	• Before carrying out troubleshooting, check that power train oil level is normal. • Before carrying out troubleshooting, check that transmission main relief pressure is normal (See H-1).

<table>
<tr><td rowspan="11">Possible causes and standard value in normal state</td><td colspan="2">Cause</td><td colspan="3">Standard value in normal state/Remarks on troubleshooting</td></tr>
<tr><td rowspan="3">1</td><td rowspan="3">Trouble in torque converter</td><td colspan="3">★ Prepare with starting switch ON, then run engine at high idle and carry out troubleshooting.</td></tr>
<tr><td>PCCS lever</td><td>Torque converter inlet pressure</td><td>Torque converter outlet pressure</td></tr>
<tr><td>Neutral</td><td>Max. 1.0 MPa {Max. 10.0 kg/cm²}</td><td>0.29 – 0.69 MPa {3.0 – 7.0 kg/cm²}</td></tr>
<tr><td rowspan="4">2</td><td rowspan="4">Malfunction of transmission clutch valve (ECMV)</td><td colspan="3">★ Prepare with engine stopped, then run engine at low idle and carry out troubleshooting.</td></tr>
<tr><td>PCCS lever</td><td>Transmission clutch</td><td>Clutch pressure</td></tr>
<tr><td>F2 stall</td><td>2ND</td><td>Min. 2.40 MPa {Min. 24.5 kg/cm²}</td></tr>
<tr><td>F3 stall</td><td>3RD</td><td>Min. 2.62 MPa {Min. 26.7 kg/cm²}</td></tr>
<tr><td>3</td><td>Trouble in transmission clutch</td><td colspan="3">Transmission clutch (2nd or 3rd gear speed) may have trouble in it. Check it directly.</td></tr>
<tr><td>4</td><td>Malfunction of parking brake (Dragging)</td><td colspan="3">Parking brake may be malfunctioning (Dragging). Check linkage and valves.</td></tr>
<tr><td rowspan="2">5</td><td rowspan="2">Malfunction of brake (Dragging)</td><td colspan="3">★ Move to level place, start engine, and check.</td></tr>
<tr><td colspan="3">Run engine at low idle and set transmission in F2. If machine does not move at this time, brake is dragging. Carry out troubleshooting for "H-8 Brake does not work".</td></tr>
<tr><td>6</td><td>Trouble in transmission</td><td colspan="3">Transmission may have trouble in it. Check it directly.</td></tr>
</table>

H-3 Machine does not start at any gear speed

Trouble	• Machine does not start at any gear speed.
Related information	• Before carrying out troubleshooting, check that power train oil level is normal.

<table>
<tr><td rowspan="13">Possible causes and standard value in normal state</td><td colspan="2">Cause</td><td colspan="3">Standard value in normal state/Remarks on troubleshooting</td></tr>
<tr><td>1</td><td>Defective power train pump</td><td colspan="3">Power train pump may be defective. Check it directly.</td></tr>
<tr><td rowspan="4">2</td><td rowspan="4">Improper set pressure or internal trouble of transmission main relief valve</td><td colspan="3">★ Prepare with engine stopped, then run engine at high idle and carry out troubleshooting.</td></tr>
<tr><td>PCCS lever</td><td colspan="2">Transmission main relief pressure</td></tr>
<tr><td>Neutral</td><td>TM</td><td>Min. 2.84 MPa
{Min. 29.0 kg/cm²}</td></tr>
<tr><td colspan="3">★ Prepare with engine stopped, then keep engine stopped and carry out troubleshooting.</td></tr>
<tr><td colspan="4">Check directly that free length of spring and number of shims are normal and spool moves smoothly.
• Free length of spring (large): 122 mm
• Free length of spring (small): 108 mm
• Number of shims: 6</td></tr>
<tr><td rowspan="6">3</td><td rowspan="6">Malfunction of transmission clutch valve (ECMV)</td><td colspan="3">★ Prepare with engine stopped, then run engine at low idle and carry out troubleshooting (after checking transmission main relief pressure is normal).</td></tr>
<tr><td>PCCS lever</td><td>Transmission clutch</td><td>Clutch pressure</td></tr>
<tr><td>F3 stall</td><td>F</td><td>Min. 2.26 MPa
{Min. 23.0 kg/cm²}</td></tr>
<tr><td>R3 stall</td><td>R</td><td>Min. 2.45 MPa
{Min. 25.0 kg/cm²}</td></tr>
<tr><td>F1 stall</td><td>1ST</td><td>Min. 2.62 MPa
{Min. 26.7 kg/cm²}</td></tr>
<tr><td>F2 stall</td><td>2ND</td><td>Min. 2.40 MPa
{Min. 24.5 kg/cm²}</td></tr>
<tr><td>F3 stall</td><td>3RD</td><td>Min. 2.62 MPa
{Min. 26.7 kg/cm²}</td></tr>
<tr><td>4</td><td>Trouble in transmission clutch</td><td colspan="3">Transmission clutch (F or R) may have trouble in it. Check it directly.</td></tr>
<tr><td rowspan="5">5</td><td rowspan="5">Malfunction of brake</td><td colspan="3">★ Prepare with engine stopped, then run engine at high idle and carry out troubleshooting (after checking transmission main relief pressure is normal).</td></tr>
<tr><td>Brake pedal</td><td>Steering brake</td><td>Brake pressure</td></tr>
<tr><td>Released</td><td rowspan="2">RB
LB</td><td>2.16 MPa
{22.0 kg/cm²}</td></tr>
<tr><td>Pressed</td><td>0 MPa
{0 kg/cm²}</td></tr>
<tr><td colspan="3">If brake pressure is abnormal, carry out troubleshooting for "H-8 Brake does not work".</td></tr>
</table>

H-4 Machine can travel only forward or in reverse

Trouble	• Machine can travel only forward or in reverse.
Related information	• Before carrying out troubleshooting, check that power train oil level is normal.

<table>
<tr><td rowspan="9">Possible causes and standard value in normal state</td><td colspan="2">Cause</td><td colspan="4">Standard value in normal state/Remarks on troubleshooting</td></tr>
<tr><td>1</td><td>Defective power train pump</td><td colspan="4">Power train pump may be defective. Check it directly.</td></tr>
<tr><td rowspan="4">2</td><td rowspan="4">Improper set pressure or internal trouble of transmission main relief valve</td><td colspan="4">★ Prepare with engine stopped, then run engine at high idle and carry out troubleshooting.</td></tr>
<tr><td>PCCS lever</td><td colspan="2">Transmission main relief pressure</td></tr>
<tr><td>Neutral</td><td>TM</td><td>Min. 2.84 MPa {Min. 29.0 kg/cm²}</td></tr>
<tr><td colspan="4">★ Prepare with engine stopped, then keep engine stopped and carry out troubleshooting.</td></tr>
<tr><td rowspan="4">3</td><td rowspan="4">Malfunction of transmission clutch valve (ECMV)</td><td colspan="4">Check directly that free length of spring and number of shims are normal and spool moves smoothly.
• Free length of spring (large): 122 mm
• Free length of spring (small): 108 mm
• Number of shims: 6</td></tr>
<tr><td colspan="4">★ Prepare with engine stopped, then run engine at low idle and carry out troubleshooting (after checking transmission main relief pressure is normal).</td></tr>
<tr><td>PCCS lever</td><td>Transmission clutch</td><td>Clutch pressure</td></tr>
<tr><td>F3 stall</td><td>F</td><td>Min. 2.26 MPa {Min. 23.0 kg/cm²}</td></tr>
<tr><td>4</td><td>Defective transmission clutch seal</td><td colspan="4">If check result of cause 3 is abnormal, seal of transmission clutch (F or R) may be defective. Check it directly.</td></tr>
<tr><td>5</td><td>Trouble in transmission clutch</td><td colspan="4">Transmission clutch (F or R) may have trouble in it. Check it directly.</td></tr>
<tr><td></td><td></td><td></td><td>R3 stall</td><td>R</td><td>Min. 2.45 MPa {Min. 25.0 kg/cm²}</td></tr>
</table>

H-5 When gear speed or travel direction is changed, time lag is large

Trouble	• When gear speed or travel direction is changed, time lag is large.
Related information	• Before carrying out troubleshooting, check that power train oil level is normal.

<table>
<tr><td rowspan="15">Possible causes and standard value in normal state</td><td colspan="2">Cause</td><td colspan="3">Standard value in normal state/Remarks on troubleshooting</td></tr>
<tr><td>1</td><td>Defective power train pump</td><td colspan="3">Power train pump may be defective. Check it directly.</td></tr>
<tr><td rowspan="4">2</td><td rowspan="4">Improper set pressure or internal trouble of transmission main relief valve</td><td colspan="3">★ Prepare with engine stopped, then run engine at high idle and carry out troubleshooting.</td></tr>
<tr><td>PCCS lever</td><td colspan="2">Transmission main relief pressure</td></tr>
<tr><td>Neutral</td><td>TM</td><td>Min. 2.84 MPa {Min. 29.0 kg/cm²}</td></tr>
<tr><td colspan="3">★ Prepare with engine stopped, then keep engine stopped and carry out troubleshooting.</td></tr>
<tr><td rowspan="7">3</td><td rowspan="7">Malfunction of transmission clutch valve (ECMV)</td><td colspan="3">Check directly that free length of spring and number of shims are normal and spool moves smoothly.
• Free length of spring (large): 122 mm
• Free length of spring (small): 108 mm
• Number of shims: 6</td></tr>
<tr><td colspan="3">★ Prepare with engine stopped, then run engine at low idle and carry out troubleshooting (after checking transmission main relief pressure is normal).</td></tr>
<tr><td>PCCS lever</td><td>Transmission clutch</td><td>Clutch pressure</td></tr>
<tr><td>F3 stall</td><td>F</td><td>Min. 2.26 MPa {Min. 23.0 kg/cm²}</td></tr>
<tr><td>R3 stall</td><td>R</td><td>Min. 2.45 MPa {Min. 25.0 kg/cm²}</td></tr>
<tr><td>F1 stall</td><td>1ST</td><td>Min. 2.62 MPa {Min. 26.7 kg/cm²}</td></tr>
<tr><td>F2 stall</td><td>2ND</td><td>Min. 2.40 MPa {Min. 24.5 kg/cm²}</td></tr>
<tr><td>F3 stall</td><td>3RD</td><td>Min. 2.62 MPa {Min. 26.7 kg/cm²}</td></tr>
<tr><td>4</td><td>Defective transmission clutch seal</td><td colspan="3">If check result of cause 3 is abnormal, seal of transmission clutch (F or R) may be defective. Check it directly.</td></tr>
<tr><td>5</td><td>Trouble in transmission clutch</td><td colspan="3">Transmission clutch may have trouble in it. Check it directly.</td></tr>
<tr><td rowspan="2">6</td><td rowspan="2">Malfunction of brake (Dragging)</td><td colspan="3">★ Move to level place, start engine, and check.</td></tr>
<tr><td colspan="3">Run engine at low idle and set transmission in F2. If machine does not move at this time, brake is dragging. Carry out troubleshooting for "H-8 Brake does not work".</td></tr>
</table>

H-6 Machine cannot be steered (Machine does not turn right or left)

Trouble	• Machine cannot be steered (Machine does not turn right or left)
Related information	• Before carrying out troubleshooting, check that oil level in hydraulic tank is normal.

	Cause		Standard value in normal state/Remarks on troubleshooting	
Possible causes and standard value in normal state	1	Improper set pressure or malfunction of self-acting pressure reducing valve	★ Prepare with engine stopped, then run engine at high idle and carry out troubleshooting.	
			PCCS lever Blade control lever Ripper control lever	Control circuit basic pressure
			Neutral	3.78 – 4.46 MPa {38.5 – 45.5 kg/cm^2}
	2	Abnormal sound from peripheral devices of HSS	If abnormal sound comes out from peripheral devices of HSS, carry out troubleshooting for "H-10 Abnormal sound comes out from around HSS pump or HSS motor".	

H-7 Steering speed or steering force is low

Trouble	• Steering speed or steering force is low.
Related information	• Before carrying out troubleshooting, check that oil level in hydraulic tank is normal.

	Cause		Standard value in normal state/Remarks on troubleshooting	
Possible causes and standard value in normal state	1	Improper set pressure or malfunction of HSS main relief valve	★ Prepare with engine stopped, then run engine at high idle and carry out troubleshooting.	
			PCCS lever	HSS relief pressure
			Left steering relief Right steering relief	38.2 – 41.7 MPa {390 – 425 kg/cm^2}
	2	Improper set pressure or malfunction of self-acting pressure reducing valve	★ Prepare with engine stopped, then run engine at high idle and carry out troubleshooting.	
			PCCS lever Blade control lever Ripper control lever	Control circuit basic pressure
			Neutral	3.78 – 4.46 MPa {38.5 – 45.5 kg/cm^2}
	3	Abnormal sound from peripheral devices of HSS	If abnormal sound comes out from peripheral devices of HSS, carry out troubleshooting for "H-10 Abnormal sound comes out from around HSS pump or HSS motor".	

H-8 Brake does not work

Trouble	• Brake does not work.
Related information	• Before carrying out troubleshooting, check that power train oil level is normal. • Before carrying out troubleshooting, check that transmission main relief pressure is normal (See H-1).

<table>
<tr><td rowspan="6">Possible causes and standard value in normal state</td><td colspan="2">Cause</td><td colspan="3">Standard value in normal state/Remarks on troubleshooting</td></tr>
<tr><td rowspan="3">1</td><td rowspan="3">Malfunction of brake valve</td><td colspan="3">★ Prepare with engine stopped, then run engine at high idle and carry out troubleshooting (after checking transmission main relief pressure is normal).</td></tr>
<tr><td>Brake pedal</td><td>Steering brake</td><td>Brake pressure</td></tr>
<tr><td>Released</td><td rowspan="2">RB
LB</td><td>2.16 MPa
{22.0 kg/cm^2}</td></tr>
<tr><td>Pressed</td><td>0 MPa
{0 kg/cm^2}</td></tr>
<tr><td>2</td><td>Defective adjustment of brake pedal limit switch</td><td colspan="3">If check result of cause 1 is abnormal, brake pedal limit switch may be adjusted defectively. Check it directly.</td></tr>
<tr><td>3</td><td>Defective brake seal</td><td colspan="3">If check result of cause 1 is abnormal, brake seal may be defective. Check it directly.</td></tr>
<tr><td>4</td><td>Slip or wear of brake disc or plate</td><td colspan="3">Brake disc or plate may be slipping or worn. Check them directly.</td></tr>
</table>

H-9 Power train oil is overheated

Trouble	• Power train oil is overheated.
Related information	• Before carrying out troubleshooting, check that power train oil level is normal. • Before carrying out troubleshooting, check that power train oil temperature gauge indicates actual oil temperature (If it does not, carry out troubleshooting for "E-9 Power train oil temperature gauge (Multi-gauge) does not indicate normally". • Before carrying out troubleshooting, check that transmission main relief pressure is normal (See H-1).

<table>
<tr><td rowspan="11">Possible causes and standard value in normal state</td><td colspan="2">Cause</td><td colspan="3">Standard value in normal state/Remarks on troubleshooting</td></tr>
<tr><td>1</td><td>Defective engine</td><td colspan="3">Engine cooling system may be defective or engine output may be increased. Carry out troubleshooting for engine unit (S mode).</td></tr>
<tr><td>2</td><td>Defective power train pump or air in suction circuit</td><td colspan="3">Power train pump may be defective or air is in suction circuit. Check them directly.</td></tr>
<tr><td rowspan="3">3</td><td rowspan="3">Trouble in torque converter</td><td colspan="3">★ Prepare with starting switch ON, then run engine at high idle and carry out troubleshooting.</td></tr>
<tr><td>PCCS lever</td><td>Torque converter inlet pressure</td><td>Torque converter outlet pressure</td></tr>
<tr><td>Neutral</td><td>Max. 1.0 MPa {Max. 10.0 kg/cm^2}</td><td>0.29 – 0.69 MPa {3.0 – 7.0 kg/cm^2}</td></tr>
<tr><td>4</td><td>Malfunction of transmission clutch (Slip)</td><td colspan="3">Transmission clutch may be malfunctioning (slipping). Check it directly.</td></tr>
<tr><td rowspan="2">5</td><td rowspan="2">Malfunction of brake (Dragging)</td><td colspan="3">★ Start engine and check.</td></tr>
<tr><td colspan="3">1. Float machine above ground with blade and ripper.
2. Run engine at low idle and set transmission gear in F3 or R3.
3. If track shoe does not turn, brake is dragging.
(Carry out troubleshooting for "H-8 Brake does not work".)</td></tr>
<tr><td rowspan="2">6</td><td rowspan="2">Malfunction of brake (Slip)</td><td colspan="3">★ Start engine and check.</td></tr>
<tr><td colspan="3">Stall machine at F3. If machine does not stop perfectly, brake is slipping.</td></tr>
</table>

H-10 Abnormal sound comes out from around HSS pump or HSS motor

Trouble	• Abnormal sound comes out from around HSS pump or HSS motor.
Related information	• Before carrying out troubleshooting, check that oil level in hydraulic tank is normal. • HSS pump is used for work equipment, too.

	Cause		Standard value in normal state/Remarks on troubleshooting
Possible causes and standard value in normal state	1	Use of improper oil	Oil used may be improper. Check it directly.
	2	Clogged hydraulic tank strainer	Hydraulic tank strainer may be clogged. Check it directly.
	3	Air in suction circuit	Suction circuit of work equipment and HSS pump may have sucked in air. Check it directly.
	4	Trouble in work equipment or HSS pump	Work equipment or HSS pump may have trouble in it.
	5	Trouble in HSS motor	HSS motor may have trouble in it. Check it directly.

H-11 Speed of all work equipment is low

Trouble	• Speed of all work equipment is low.
Related information	• Before carrying out troubleshooting, check that oil level in hydraulic tank is normal.

	Cause		Standard value in normal state/Remarks on troubleshooting	
Possible causes and standard value in normal state	1	Defective PTO (work equipment and HSS pump drive section)	Work equipment and HSS pump drive section of PTO may be defective. Check them directly.	
	2	Defective work equipment or HSS pump	Work equipment or HSS pump may be defective. Check them directly.	
	3	Malfunction of unload valve	★ Prepare with starting switch ON, then run engine at high idle and carry out troubleshooting.	
			PCCS lever Blade control lever Ripper control lever	Unload pressure
			Neutral	2.45 (+1.37/0) MPa {25 (+14/0) kg/cm²}
	4	Improper set pressure or malfunction of main relief valve	★ Prepare with starting switch ON, then run engine at high idle and carry out troubleshooting.	
			Blade control lever	Main relief pressure
			Raise relief	27.5 ± 1.5 MPa {280 ± 15 kg/cm²}
	5	Improper set pressure or malfunction of self-acting pressure reducing valve	★ Prepare with engine stopped, then run engine at high idle and carry out troubleshooting.	
			PCCS lever Blade control lever Ripper control lever	Control circuit basic pressure
			Neutral	3.78 – 4.46 MPa {38.5 – 45.5 kg/cm²}
	6	Trouble in fan pump	If check result of cause 5 is abnormal, fan pump may have trouble in it. Check it directly.	

H-12 No work equipment moves

Trouble	• No work equipment moves.
Related information	• Before carrying out troubleshooting, check that oil level in hydraulic tank is normal.

	Cause		Standard value in normal state/Remarks on troubleshooting	
Possible causes and standard value in normal state	1	Defective PTO (work equipment and HSS pump drive section)	Work equipment and HSS pump drive section of PTO may be defective. Check them directly.	
	2	Defective work equipment or HSS pump	Work equipment or HSS pump may be defective. Check them directly.	
	3	Malfunction of unload valve	★ Prepare with starting switch ON, then run engine at high idle and carry out troubleshooting.	
			PCCS lever Blade control lever Ripper control lever	Unload pressure
			Neutral	2.45 (+1.37/0) MPa {25 (+14/0) kg/cm^2}
	4	Improper set pressure or malfunction of main relief valve	★ Prepare with starting switch ON, then run engine at high idle and carry out troubleshooting.	
			Blade control lever	Main relief pressure
			Raise relief	27.5 ± 1.5 MPa {280 ± 15 kg/cm^2}
	5	Improper set pressure or malfunction of self-acting pressure reducing valve	★ Prepare with engine stopped, then run engine at high idle and carry out troubleshooting.	
			PCCS lever Blade control lever Ripper control lever	Control circuit basic pressure
			Neutral	3.78 – 4.46 MPa {38.5 – 45.5 kg/cm^2}
	6	Malfunction of work equipment lock solenoid valve	★ Prepare with engine stopped, then run engine at high idle and carry out troubleshooting.	
			Work equipment lock lever	Solenoid valve output pressure
			Lock	0 MPa {0 kg/cm^2}
			Free	3.78 – 4.46 MPa {38.5 – 45.5 kg/cm^2}

H-13 Blade lift speed or power is low

Trouble	• Blade lift speed or power is low.
Related information	• Before carrying out troubleshooting, check that oil level in hydraulic tank is normal. • Check that blade has not been modified. • If hydraulic drift of blade lift is large, carry out troubleshooting for "H-17 Hydraulic drift of blade lift is large" first.

<table>
<tr><td rowspan="8">Possible causes and standard value in normal state</td><td colspan="2">Cause</td><td colspan="2">Standard value in normal state/Remarks on troubleshooting</td></tr>
<tr><td rowspan="3">1</td><td rowspan="3">Improper set pressure or malfunction of main relief valve</td><td colspan="2">★ Prepare with starting switch ON, then run engine at high idle and carry out troubleshooting.</td></tr>
<tr><td>Blade control lever</td><td>Main relief pressure</td></tr>
<tr><td>Raise relief</td><td>27.5 ± 1.5 MPa
{280 ± 15 kg/cm²}</td></tr>
<tr><td rowspan="3">2</td><td rowspan="3">Improper set pressure or malfunction of self-acting pressure reducing valve</td><td colspan="2">★ Prepare with engine stopped, then run engine at high idle and carry out troubleshooting.</td></tr>
<tr><td>PCCS lever
Blade control lever
Ripper control lever</td><td>Control circuit basic pressure</td></tr>
<tr><td>Neutral</td><td>3.78 – 4.46 MPa
{38.5 – 45.5 kg/cm²}</td></tr>
<tr><td>3</td><td>Malfunction of blade lift control valve (spool)</td><td colspan="2">Spool of blade lift control valve may be malfunctioning. Check it directly.</td></tr>
<tr><td>4</td><td>Malfunction of blade lift control valve (suction valve)</td><td colspan="2">Suction valve of blade lift control valve may be malfunctioning. Check it directly.
* This suction valve can be checked by replacing it with suction valve of ripper lift or ripper tilt control valve and observing change of phenomenon.</td></tr>
<tr><td>5</td><td>Air in blade lift cylinder</td><td colspan="2">Air may be in blade lift cylinder. Bleed air and then judge from change of phenomenon.</td></tr>
</table>

H-14 Blade tilt speed or power is low

Trouble	• Blade tilt speed or power is low.
Related information	• Before carrying out troubleshooting, check that oil level in hydraulic tank is normal. • Check that blade has not been modified. • If hydraulic drift of blade tilt is large, carry out troubleshooting for "H-18 Hydraulic drift of blade tilt is large" first.

	Cause		Standard value in normal state/Remarks on troubleshooting	
Possible causes and standard value in normal state	1	Improper set pressure or malfunction of main relief valve	★ Prepare with starting switch ON, then run engine at high idle and carry out troubleshooting.	
			Blade control lever	Main relief pressure
			Left tilt relief	27.5 ± 1.5 MPa {280 ± 15 kg/cm²}
	2	Improper set pressure or malfunction of self-acting pressure reducing valve	★ Prepare with engine stopped, then run engine at high idle and carry out troubleshooting.	
			PCCS lever Blade control lever Ripper control lever	Control circuit basic pressure
			Neutral	3.78 – 4.46 MPa {38.5 – 45.5 kg/cm²}
	3	Malfunction of blade tilt control valve (spool)	Spool of blade tilt control valve may be malfunctioning. Check it directly.	
	4	Air in blade tilt cylinder	Air may be in blade tilt cylinder. Bleed air and then judge from change of phenomenon.	

H-15 Ripper lift speed or power is low

Trouble	• Ripper lift speed or power is low.
Related information	• Before carrying out troubleshooting, check that oil level in hydraulic tank is normal. • Check that ripper has not been modified. • If hydraulic drift of ripper lift is large, carry out troubleshooting for "H-19 Hydraulic drift of ripper lift is large" first.

<table>
<tr><td rowspan="8">Possible causes and standard value in normal state</td><td colspan="2">Cause</td><td colspan="2">Standard value in normal state/Remarks on troubleshooting</td></tr>
<tr><td rowspan="3">1</td><td rowspan="3">Improper set pressure or malfunction of main relief valve</td><td colspan="2">★ Prepare with starting switch ON, then run engine at high idle and carry out troubleshooting.</td></tr>
<tr><td>Ripper control lever</td><td>Main relief pressure</td></tr>
<tr><td>Raise relief</td><td>27.5 ± 1.5 MPa
{280 ± 15 kg/cm²}</td></tr>
<tr><td rowspan="3">2</td><td rowspan="3">Improper set pressure or malfunction of self-acting pressure reducing valve</td><td colspan="2">★ Prepare with engine stopped, then run engine at high idle and carry out troubleshooting.</td></tr>
<tr><td>PCCS lever
Blade control lever
Ripper control lever</td><td>Control circuit basic pressure</td></tr>
<tr><td>Neutral</td><td>3.78 – 4.46 MPa
{38.5 – 45.5 kg/cm²}</td></tr>
<tr><td>3</td><td>Malfunction of ripper lift control valve (spool)</td><td colspan="2">Spool of ripper lift control valve may be malfunctioning. Check it directly.</td></tr>
<tr><td>4</td><td>Malfunction of ripper lift control valve (suction valve)</td><td colspan="2">Suction valve of ripper lift control valve may be malfunctioning. Check it directly.
* This suction valve can be checked by replacing suction valves on head side and bottom side with each other and observing change of phenomenon.</td></tr>
<tr><td>5</td><td>Air in ripper lift cylinder</td><td colspan="2">Air may be in ripper lift cylinder. Bleed air and then judge from change of phenomenon.</td></tr>
</table>

H-16 Ripper tilt speed or power is low

Trouble	• Ripper tilt speed or power is low.
Related information	• Before carrying out troubleshooting, check that oil level in hydraulic tank is normal. • Check that ripper has not been modified.

	Cause		Standard value in normal state/Remarks on troubleshooting	
Possible causes and standard value in normal state	1	Improper set pressure or malfunction of main relief valve	★ Prepare with starting switch ON, then run engine at high idle and carry out troubleshooting.	
			Ripper control lever	Main relief pressure
			Tilt-in relief	27.5 ± 1.5 MPa {280 ± 15 kg/cm²}
	2	Improper set pressure or malfunction of self-acting pressure reducing valve	★ Prepare with engine stopped, then run engine at high idle and carry out troubleshooting.	
			PCCS lever Blade control lever Ripper control lever	Control circuit basic pressure
			Neutral	3.78 – 4.46 MPa {38.5 – 45.5 kg/cm²}
	3	Malfunction of ripper tilt control valve (spool)	Spool of ripper tilt control valve may be malfunctioning. Check it directly.	
	4	Malfunction of ripper tilt control valve (suction valve)	Suction valve of ripper tilt control valve may be malfunctioning. Check it directly. * This suction valve can be checked by replacing suction valves on head side and bottom side with each other and observing change of phenomenon.	
	5	Air in ripper tilt cylinder	Air may be in ripper tilt cylinder. Bleed air and then judge from change of phenomenon.	

H-17 Hydraulic drift of blade lift is large

Trouble	• Hydraulic drift of blade lift is large.
Related information	• Check that blade has not been modified. • Before carrying out troubleshooting, check that oil is not leaking from work equipment circuit.

	Cause		Standard value in normal state/Remarks on troubleshooting
Possible causes and standard value in normal state	1	Defective seal of blade lift control valve (spool)	★ Start engine and prepare, then stop engine and carry out troubleshooting.
			Perform following procedure. If hydraulic drift is increased at this time, seal of blade lift control valve spool is defective. 1. Brace blade against ground by lifting operation to push up front part of machine. 2. Stop engine and then turn starting switch ON. 3. Set blade control lever in "Lower" position and check phenomenon.
	2	Defective seal of blade lift cylinder	Seal of blade lift cylinder may be defective. Check it directly.

H-18 Hydraulic drift of blade tilt is large

Trouble	• Hydraulic drift of blade tilt is large.
Related information	• Check that blade has not been modified. • Before carrying out troubleshooting, check that oil is not leaking from work equipment circuit.

	Cause		Standard value in normal state/Remarks on troubleshooting	
Possible causes and standard value in normal state	1	Defective seal of blade tilt control valve (spool)	★ Start engine and prepare, then stop engine and carry out troubleshooting.	
			Perform following procedure. If hydraulic drift is increased at this time, seal of blade tilt control valve spool is defective. 1. Brace blade against ground by tilting operation to push up front part of machine. 2. Stop engine and then turn starting switch ON. 3. Set blade control lever in "Tilt left" position and check phenomenon.	
	2	Defective seal of blade tilt cylinder	★ Prepare with engine stopped, then run engine at high idle and carry out troubleshooting.	
			Blade tilt cylinder	Leakage from cylinder
			Left tilt relief	12 cc/min

H-19 Hydraulic drift of ripper lift is large

Trouble	• Hydraulic drift of ripper lift is large.
Related information	• Check that ripper has not been modified. • Before carrying out troubleshooting, check that oil is not leaking from work equipment circuit.

	Cause		Standard value in normal state/Remarks on troubleshooting	
Possible causes and standard value in normal state	1	Defective seal of ripper lift control valve (spool)	★ Start engine and prepare, then stop engine and carry out troubleshooting.	
			Perform following procedure. If hydraulic drift is increased at this time, seal of ripper lift control valve spool is defective. 1. Brace ripper against ground by lifting operation to push up rear part of machine. 2. Stop engine and then turn starting switch ON. 3. Set ripper control lever in "Lower" position and check phenomenon.	
	2	Defective seal of ripper lift cylinder	★ Prepare with engine stopped, then run engine at high idle and carry out troubleshooting.	
			Ripper lift cylinder	Leakage from cylinder
			Lower relief	11 cc/min

H-20 Ripper pin puller cylinder does not operate

Giant ripper specification

Trouble	• Ripper pin puller cylinder does not operate.
Related information	• Before carrying out troubleshooting, check that transmission main relief pressure is normal (See H-1).

<table>
<tr><td rowspan="5">Possible causes and standard value in normal state</td><td colspan="2">Cause</td><td colspan="3">Standard value in normal state/Remarks on troubleshooting</td></tr>
<tr><td rowspan="3">1</td><td rowspan="3">Malfunction of pin puller solenoid</td><td colspan="3">★ Prepare with engine stopped, then run engine at high idle and carry out troubleshooting.</td></tr>
<tr><td>Pin puller switch</td><td>Check point</td><td>Solenoid output pressure</td></tr>
<tr><td>Pushed in</td><td>Cylinder bottom side</td><td rowspan="2">Min. 2.84 MPa {Min. 29.0 kg/cm^2}</td></tr>
<tr><td>Pulled out</td><td>Cylinder head side</td></tr>
<tr><td>2</td><td>Trouble in pin puller cylinder</td><td colspan="3">Pin puller cylinder has trouble in it. Check it directly.</td></tr>
</table>

H-21 Blade does not pitch

Dual tilt specification

Trouble	• Blade does not pitch.
Related information	

Possible causes and standard value in normal state	Cause		Standard value in normal state/Remarks on troubleshooting
	1	Malfunction of blade pitch control valve (spool)	Spool of blade pitch control valve may be malfunctioning. Check it directly.
	2	Malfunction of blade pitch cylinder	Blade pitch cylinder may be malfunctioning. Check it directly.

H-22 Abnormal sound comes out from around work equipment pump

Trouble	• Abnormal sound comes out from around work equipment pump.
Related information	• Before carrying out troubleshooting, check that oil level in hydraulic tank is normal. • Work equipment pump is used for HSS, too.

		Cause	Standard value in normal state/Remarks on troubleshooting
Possible causes and standard value in normal state	1	Use of improper oil	Oil used may be improper. Check it directly.
	2	Clogged hydraulic tank strainer	Hydraulic tank strainer may be clogged. Check it directly.
	3	Air in suction circuit	Suction circuit of work equipment and HSS pump may have sucked in air. Check it directly.
	4	Trouble in work equipment or HSS pump	Work equipment or HSS pump may have trouble in it.

D155AX-6 Bulldozer

Form No. SEN00808-00

© 2006 KOMATSU
All Rights Reserved
Printed in Japan 02-06 (02)

BULLDOZER

D155AX-6

Machine model	Serial number
D155AX-6	80001 and up

40 Troubleshooting

Troubleshooting of engine (S-mode)

Troubleshooting of engine (S-mode) ... 3
Method of using troubleshooting chart ... 3
S-1 Starting performance of engine is poor ... 6
S-2 Engine does not start ... 8
S-3 Engine does not pick up smoothly ... 12
S-4 Engine stops during operation ... 13
S-5 Engine does not rotate smoothly ... 14
S-6 Engine lack output (or lacks power) ... 15
S-7 Exhaust gas is black (incomplete combustion) ... 16
S-8 Oil consumption is excessive (or exhaust gas is blue) ... 18
S-9 Oil becomes dirty quickly ... 19
S-10 Fuel consumption is excessive ... 20
S-11 Oil is in coolant (or coolant spurts back or coolant level goes ... 21
S-12 Oil pressure drops ... 22
S-13 Oil level rises (Entry of coolant or fuel) ... 24
S-14 Coolant temperature becomes too high (Overheating) ... 26

S-15 Abnormal noise is made 27
S-16 Vibration is excessive 28

Troubleshooting of engine (S-mode)

Method of using troubleshooting chart

The troubleshooting chart consists of the "questions", "check items", "causes", and "troubleshooting" blocks.
The questions and check items are used to pinpoint high probability causes by simple inspection or from phenomena without using troubleshooting tools.
Next, troubleshooting tools or direct inspection are applied to check the narrowed causes in order from the most probable one to make final confirmation according to the troubleshooting procedure.

[Questions]

Items to be drawn from the user or operator. They correspond to **A** and **B** in the chart on the right. The items in **A** are basic ones. The items in **B** can be drawn from the user or operator, depending on their level.

[Check items]

Simple check items used by the serviceman to narrow the causes. They correspond to **C** in the chart on the right.

[Causes]

Items to be narrowed from the questions and check items. The serviceman narrows down the probable causes from **A**, **B**, and **C**.

[Troubleshooting]

Items used to find out the true cause by verifying the narrowed causes finally in order from the most probable one by applying troubleshooting tools or direct inspection.

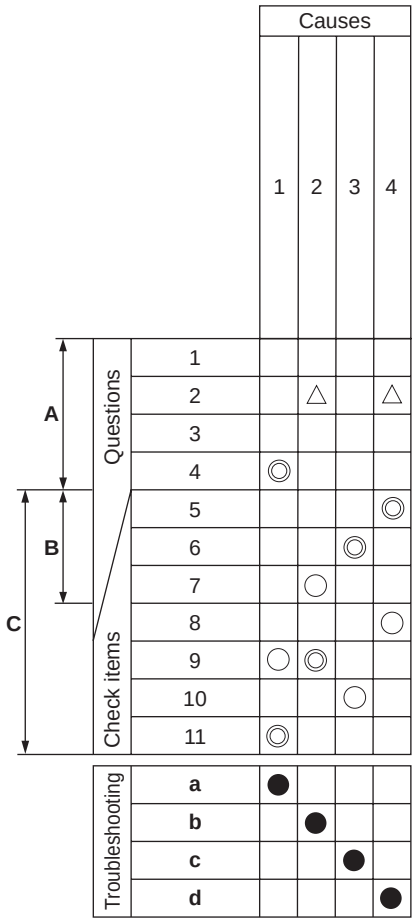

Items listed in the [Questions] and [Check items] and related to the [Causes] are marked with △, ○, and ◎.

△: Causes to be referred to for questions and check items
○ : Causes related to questions and check items
◎ : Causes highly probable among ones marked with ○

★ When narrowing the "causes", apply the items marked with ◎ before those marked with ○.
When narrowing the "causes", do not apply the items marked with △. (If no items have other marks and the causes cannot be narrowed, however, you may apply them.)

<Example of troubleshooting> Exhaust gas is black(Incomplete combustion)
Let us assume that a trouble of "Exhaust gas is black" occurred and we checked the [**Questions**] and [**Check items**] and found the following 3 items to be the causal symptoms; "Exhaust gas slowly became black", "Power slowly became weaker", and "Dust indicator is lighting red".

S-7 Exhaust gas is black (Incomplete combustion)

General causes why exhaust gas is black
- Insufficient intake of air
- Excessive injection of fuel
- Defective condition of fuel injection
- Improper selection of fuel
- Overheating
  ⇒See "S-14 Coolant temperature becomes too high (Overheating)"
- Control by controller in derate mode (limiting injection rate (output) because of an error in electrical system)
- EGR valve stuck open (There is much EGR gas and intake of air is insufficient)
- Clogged EGR gas pressure piping (Exhaust gas is mixed in intake air during acceleration and deceleration)

			Cause: Clogged air cleaner element	Seized turbocharger or interference of turbocharger	Stuck EGR valve	Clogged EGR gas pressure piping	Defective contact of valve and valve seat	Improper valve clearance	Leakage of air between turbocharger and cylinder head	Crushed or clogged muffler	Worn piston ring or cylinder liner	Stuck or seized supply pump plunger	Clogged or seized injector	Abnormally worn injector	Clogged fuel spill piping (on cylinder head side)	Improper fuel injection timing	Improper fuel injection pressure	Defective coolant temperature sensor or wiring harness
Questions	Confirm recent repair history																	
	Degree of use of machine	Operated for long period	△		△		△				△		△					
	Exhaust gas color	Suddenly became black		◎	○	○						○	○					
		Gradually became blackB	◎			◎			○				○	○				
		Blue under light load									◎							
	Non-specified fuel is used											○	○					
	Oil must be added more frequently										◎							
	Power was lost	Suddenly		◎						○		○	○					
		Gradually	○				○		○		○							
	Dust indicator is red (if it is installed)		◎															
Check items	Muffler is crushed									◎								
	Air leaks between turbocharger and cylinder head or clamp is loosened								◎									
	Engine is operated in low-temperature mode at normal temperature															○	○	○
	Immediately after engine is started, temperature of exhaust manifold of a cylinder is low											○	◎					
	When engine is rotated, interference sound comes out from around turbocharger			◎														
	When engine is rotated, abnormal sound comes out from around cylinder head							◎										
	Torque converter stall speed or pump relief speed is high (Fuel is injected excessively)													○	○			
	Exhaust noise is abnormal			○						◎			○					
	Engine does not pick up smoothly and combustion is irregular			○	○			○	○	○		○	◎					
	Blow-by gas is excessive										◎							
	When spill hose from injector is disconnected, abnormally much fuel spills													◎				
Troubleshooting	Inspect air cleaner directly		●															
	Turbocharger is heavy to rotate with hand			●														
	Carry out troubleshooting according to "EGR Valve Servo Error 1 (*1)" in E mode				●													
	Check EGR gas pressure piping directly (*2)					●												
	Compression pressure is low						●				●							
	Inspect valve clearance directly							●										
	When muffler is removed, exhaust gas color improves									●								
	Carry out troubleshooting according to "Rail Press Low Error (*3)" in E mode											●		●				
	When a cylinder is cut out for reduced cylinder mode operation, engine speed does not change												●					
	Inspect fuel spill piping (on cylinder head side) directly														●			
	Carry out troubleshooting according to "Coolant Temp Sens (High/Low) Error (*4) in E mode																	●
		Remedy	Clean	Replace	Replace	Replace	Replace	Adjust	Correct	Replace	Replace	Replace	Replace	Replace	Correct	Adjust	Adjust	Replace

There is a causal relationship between 3 items in the [**Questions**] and [**Check items**] sections and 6 items in the [**Causes**] section.
The method of pinpointing the [**Causes**] from the causal relationship and approaching the [**troubleshooting**] is explained according to Step 1 - Step 3 shown below.

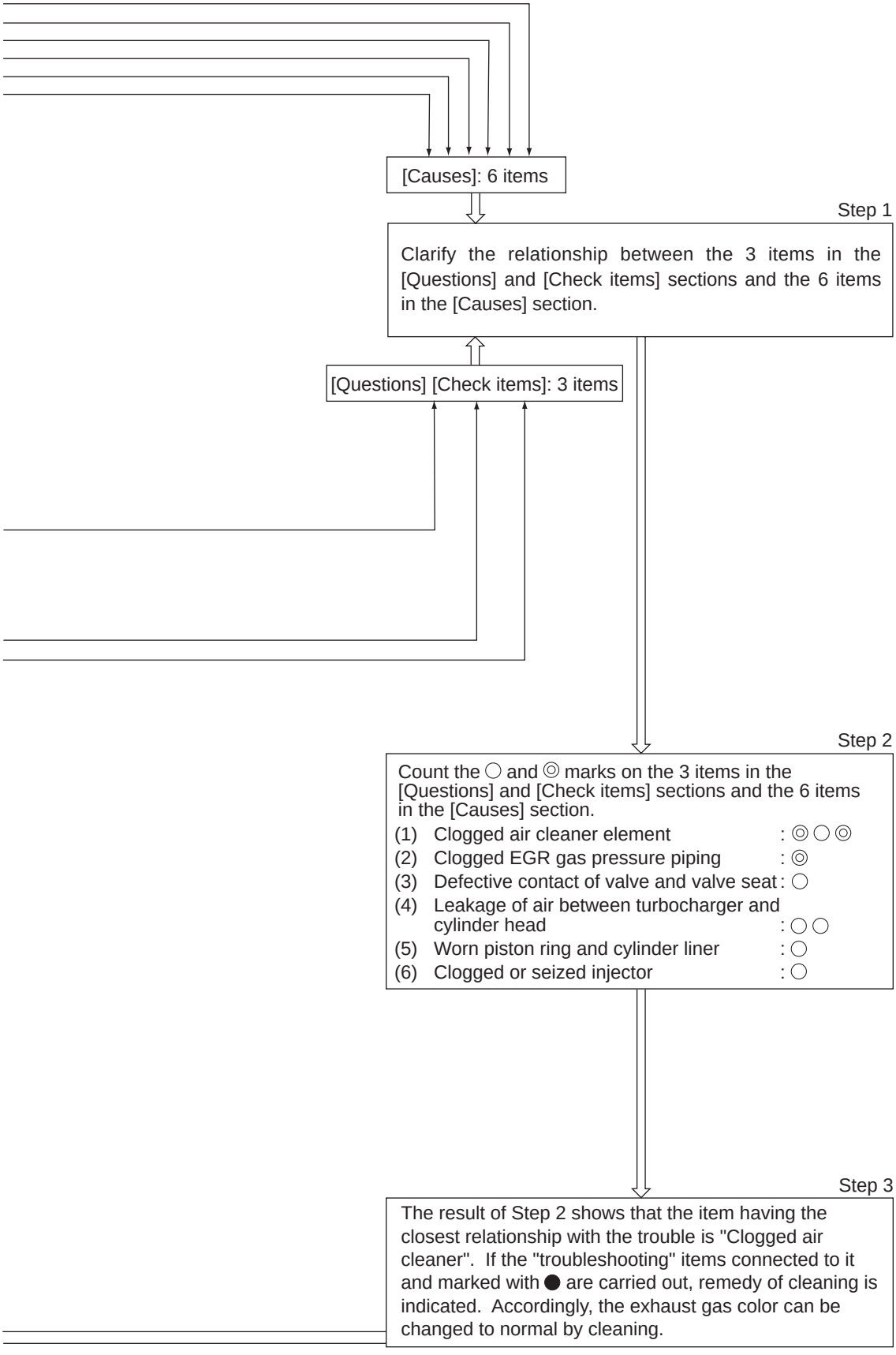

S-1 Starting performance of engine is poor

General causes why starting performance is poor
- Defective electrical system
- Insufficient supply of fuel
- Insufficient intake of air
- Improper selection of fuel
- Coolant in exhaust pipe

★ The common rail fuel injection system (CRI) recognizes the fuel injection timing electrically. Accordingly, even if the starting operation is carried out, the engine may not start until the crankshaft revolves 2 turns at maximum. This phenomenon does not indicate a trouble, however

			Causes														
			Clogged air cleaner element	Cracked EGR cooler (Coolant in exhaust pipe)	Defective contact of valve and vale seat	Worn piston ring, cylinder	Clogged air breather hole of fuel tank cap	Leaking or clogged fuel piping or entry of air	Clogged fuel filter element	Clogged feed pump gauze filter	Stuck or seized supply pump plunger	Defective injector	Defective intake air heater system	Defective alternator (regulator section)	Defective alternator (generator section)	Defective or deteriorated battery
Questions	Confirm recent repair history															
	Degree of use of machine	Operated for long period	△	△					△	△						△
	Starting performance	Became worse gradually	○	○	◎	◎			○	○						
		Engine starts easily when warm											◎			◎
	Non-specified fuel is used								○	○	○	○				
	Filters have not been replaced according to Operation and Maintenance Manual		◎						◎	◎	○	○				
	Engine oil must be added more frequently					◎										
	When engine is preheated or when temperature is low, preheating monitor does not indicate normally (if monitor is installed)												◎			
	During operation, charge level monitor indicates abnormal charge (if monitor is installed)													◎	◎	
Check items	Dust indicator is red (if it is installed)		◎													
	Air breather hole of fuel tank cap is clogged						◎									
	Fuel is leaking from fuel piping							◎			○					
	Priming pump is too light or too heavy to operate							◎	○	○						
	Starting motor cranks engine slowly			○												◎
	While engine is rotated with starting motor	When air bleeding plug of fuel filter is removed, fuel does not flow out							◎	◎						
		When spill hose from injector is disconnected, little fuel spills									◎					
	Immediately after engine is started, temperature of exhaust manifold of a cylinder is low											◎				
	Engine does not pick up smoothly and combustion is irregular				○	○						◎				
	Engine hunts (rotation is irregular)						○	◎	○	○						
	Blow-by gas is excessive					◎										
Troubleshooting	Inspect air cleaner directly		●													
	When EGR cooler outlet gas piping is removed, coolant containing antifreeze flows out (*1)			●												
	Compression pressure is low				●	●										
	When air is bled from fuel system, air comes out							●								
	Inspect fuel filter and strainer directly								●							
	Inspect feed pump gauze filter directly									●						
	Carry out troubleshooting according to "Rail Press (Very) Low Error (*2)" indicated by code										●					
	When a cylinder is cut out for reduced cylinder mode operation, engine speed does not change											●				
	When starting switch is turned to HEAT, intake air heater mount does not become warm												●			
	Is voltage of 20 – 30 V generated between alternator terminals B and E while engine is running at low idle?	Yes												●		
		No													●	
	Specific gravity of electrolyte and battery voltage are low															●
		Remedy	Clean	Replace	Correct	Replace	Clean	Correct	Clean	Clean	Replace	Replace	Replace	Replace	Replace	Replace

*1: EGR cooler outlet gas piping
Loosen 4 mounting bolts (1) of the EGR cooler outlet gas piping and see if the coolant flows out.
A little condensate produced from cooled exhaust gas may flow out. If it is colorless and transparent, however, it is not a problem.

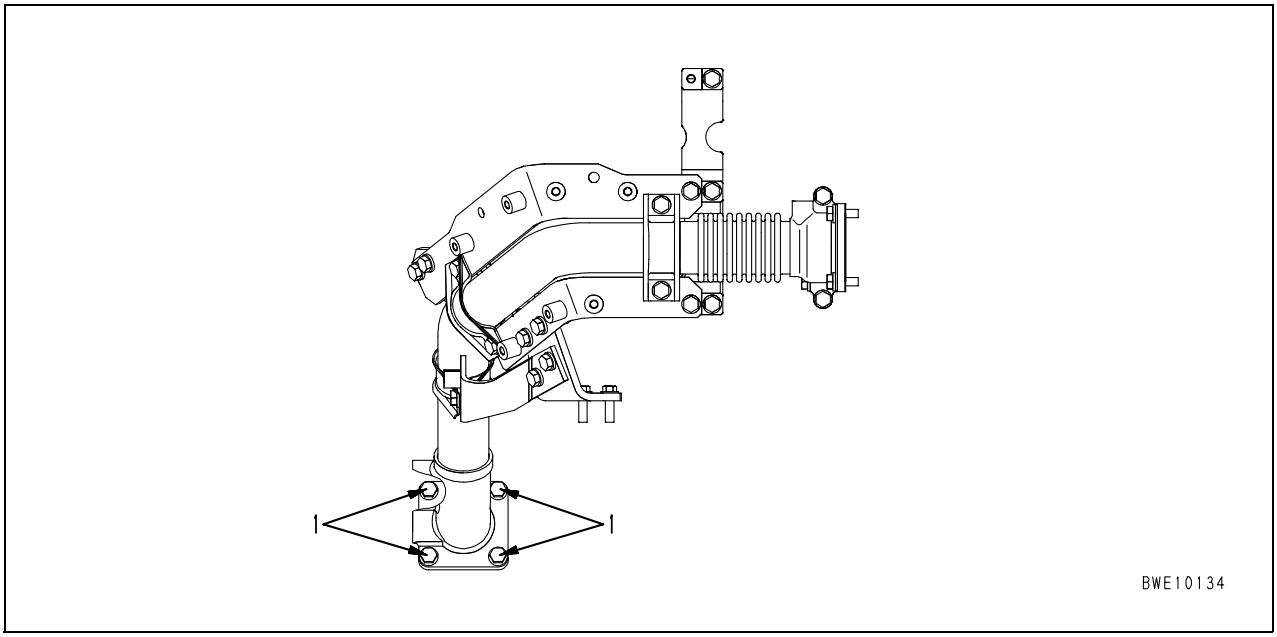

*2: Displayed failure codes: [**CA559**] and [**CA2249**]

S-2 Engine does not start

a) Engine does not rotate

General causes why engine does not rotate

- Seized internal parts of engine
  → See "S-4 Engine stops during operation"
- Water hammer caused by coolant which entered cylinder
- Defective electrical system
- Trouble in drive devices on applicable machine side
  → Carry out troubleshooting for devices on applicable machine

			Causes								
			Cracked EGR cooler (Coolant in exhaust pipe)	Broken flywheel ring gear	Defective or deteriorated battery	Defective connection of battery terminal	Defective battery relay	Defective starting switch	Defective starting motor (safety relay section)	Defective starting motor (motor section)	Defective starting circuit wiring
Questions	Confirm recent repair history										
	Degree of use of machine	Operated for long period	△	△	△						
	When starting switch is turned ON	Horn does not sound				○		○			◎
		Horn volume is low			◎						
Check items	Battery electrolyte level is low				◎						
	Battery terminal is loose					◎					
	When starting switch is turned ON, no operating sound comes out from battery relay				○		◎				
	When starting switch is turned to START, starting pinion does not move out				○			○			◎
	When starting switch is turned to START, starting pinion moves out, but	Speed of rotation is low	○		◎						
		Makes grating noise		◎					◎		
		Soon disengages again							◎		
		Makes rattling noise and does not turn	◎		○				○	◎	
Troubleshooting	When EGR cooler outlet gas piping is removed, coolant containing antifreeze flows out (*1).		●								Carry out troubleshooting on applicable machine side
	Inspect flywheel ring gear directly			●							
	Specific gravity of electrolyte and battery voltage are low				●						
	Turn starting switch OFF, connect cables, turn starting switch ON, and carry out trouble-shooting	There is not voltage (20 – 30 V) between battery relay terminals B and E					●				
		When terminals B and C of starting switch are connected, engine starts						●			
		When terminals B and C at safety relay outlet are connected, engine starts							●		
		Even if terminals B and C at safety relay outlet are connected, engine does not start								●	
		Remedy	Replace	Replace	Replace	Correct	Replace	Replace	Replace	Replace	—

*1: EGR cooler outlet gas piping
Loosen 4 mounting bolts (1) of the EGR cooler outlet gas piping and see if the coolant flows out.
A little condensate produced from cooled exhaust gas may flow out. If it is colorless and transparent, however, it is not a problem.

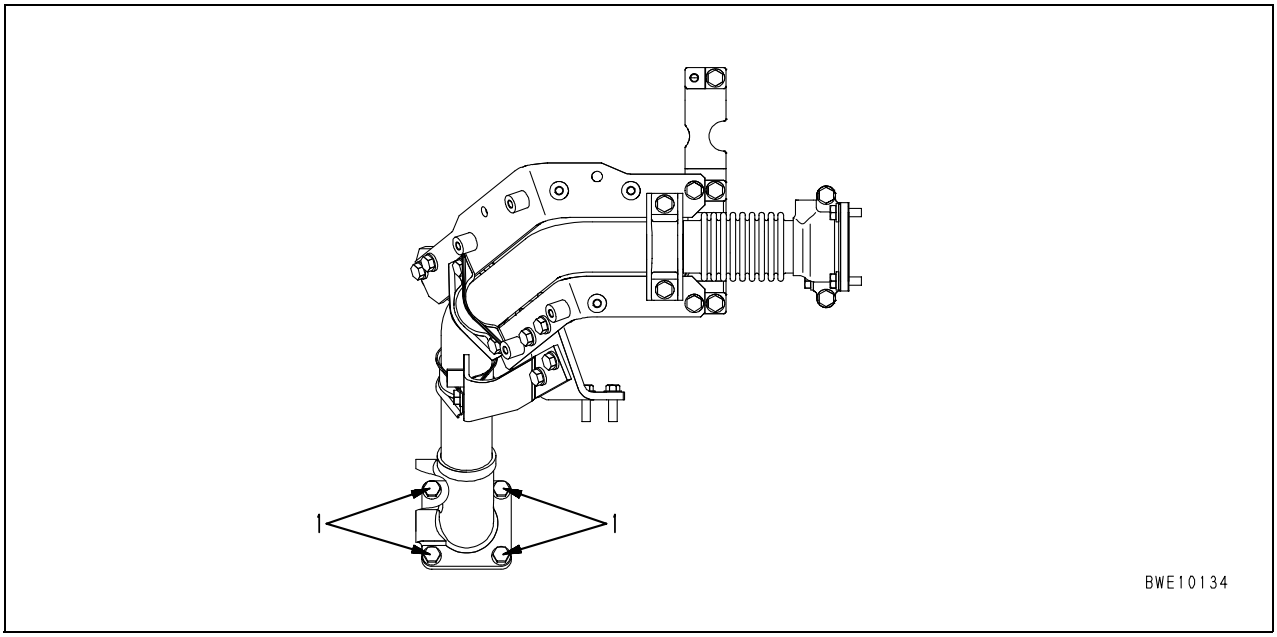

b) Engine rotates but no exhaust gas comes out

General causes why engine rotates but no exhaust gas comes out

- Fuel is not supplied
- Supply of fuel is extremely small
- Improper selection of fuel (particularly in winter)

			Causes														
			Use of improper fuel	Insufficient fuel in tank	Clogged air breather hole of fuel tank cap	Leaking or clogged fuel piping or entry of air	Clogged fuel filter element	Clogged feed pump gauze filter	Seized or abnormally worn feed pump	Broken supply pump shaft or key	Stuck or seized supply pump plunger	Defective supply pump PCV	Wrong connection of supply pump PCV	Malfunction of overflow valve (Does not close)	Malfunction flow damper	Defective fuel injector
Questions	Confirm recent repair history																
Questions	Degree of use of machine	Operated for long period				△	△	△									
Questions	Exhaust gas suddenly stopped coming out (when starting again)								◎	○	◎	◎	◎		△	△
Questions	Filters have not been replaced according to Operation and Maintenance Manual						◎	◎			△					○
Check items	Fuel tank is empty			◎												
Check items	Air breather hole of fuel tank cap is clogged			○	◎											
Check items	There are rust and water in fuel drained from fuel tank						○	○	○		○	○				
Check items	There is not fuel in removed fuel filter		◎			◎										
Check items	Fuel is leaking from fuel piping					◎										
Check items	Priming pump is too light or too heavy to operate					◎	○	○								
Check items	While engine is rotated with starting motor	When air bleeding plug of fuel filter is removed, fuel does not flow out		○		○			◎	○						
Check items	While engine is rotated with starting motor	When spill hose from injector is disconnected, little fuel spills				○				◎	◎	◎	◎			○
Troubleshooting	When air is bled from fuel system, air comes out					●										
Troubleshooting	Inspect fuel filter directly						●									
Troubleshooting	Inspect feed pump gauze filter directly							●								
Troubleshooting	Inspect feed pump directly								●							
Troubleshooting	Carry out troubleshooting according to "Rail Press (Very) Low Error (*1)" indicated by code									●	●		●			●
Troubleshooting	Carry out troubleshooting according to "PCV1 Short/Open Error (*2) or PCV2 Short/Open Error (*3)" indicated by code											●				
Troubleshooting	Inspect overflow valve directly													●		
Troubleshooting	Engine can be started in reduced cylinder mode														●	●
		Remedy	Replace	Add	Correct	Correct	Replace	Clean	Replace	Replace	Replace	Replace	Correct	Replace	Replace	Replace

*1: Displayed failure codes [**CA559**] and [**CA2249**]
*2: Displayed failure codes [**CA271**] and [**CA272**]
*3: Displayed failure codes [**CA273**] and [**CA274**]

c) Exhaust gas comes but engine does not start (fuel is injected)

General causes why exhaust smoke comes out but engine does not start

- Lack of rotating force due to defective electrical system
- Insufficient supply of fuel
- Insufficient intake of air
- Improper selection of fuel

			Causes													
			Clogged air cleaner element	Worn dynamic valve system (Valve, rocker lever, etc.)	Worn piston ring or cylinder liner	Use of improper fuel	Clogged air breather hole of fuel tank cap	Leaking or clogged fuel system or entry of air	Clogged fuel filter or strainer	Clogged feed pump gauze filter	Stuck or seized supply pump plunger	Clogged injector or defective spray	Defective or deteriorated battery	Defective coolant temperature sensor or wiring harness	Defective intake air heater system
Questions	Confirm recent repair history														
	Degree of use of machine	Operated for long period			△				△	△		△			
	Suddenly failed to start			◎							◎			○	
	Non-specified fuel is used										○	○			
	Filters have not been replaced according to Operation and Maintenance Manual		◎						◎	◎					
	Engine oil must be added more frequently				◎										
	When engine is preheated or when temperature is low, preheating monitor does not indicate normally (if monitor is installed)														◎
Check items	Dust indicator is red (if it is installed)		◎												
	Air breather hole of fuel tank cap is clogged						○								
	There are rust and water in fuel drained from fuel tank								◎	◎					
	There is not fuel in removed fuel filter					◎									
	Fuel is leaking from fuel piping							◎							
	Priming pump is too light or too heavy to operate							◎	○	○					
	Starting motor rotates engine slowly												◎		
	When engine is rotated, abnormal sound comes out from around cylinder head			◎											
	While engine is rotated with starting motor,	When air bleeding plug of fuel filter is removed, fuel does not flow out				○			◎	◎					
		When spill hose from injector is disconnected, little fuel spills									◎				
	Immediately after engine is started, temperature of exhaust manifold of a cylinder is low											◎			
Troubleshooting	Inspect air cleaner directly		●												
	Inspect dynamic valve system directly			●											
	Compression pressure is low				●										
	When air is bled from fuel system, air comes out							●							
	Inspect fuel filter and strainer directly								●						
	Inspect feed pump gauze filter directly									●					
	Carry out troubleshooting according to "Rail Press (Very) Low Error (*1)" indicated by code										●				
	When injector unit is tested, spray condition is bad											●			
	Specific gravity of electrolyte and battery voltage are low												●		
	Coolant temperature gauge does not indicate normally (if it is installed)													●	
	When starting switch is turned to HEAT, intake air heater mount does not become warm														●
		Remedy	Clean	Replace	Replace	Replace	Clean	Correct	Clean	Clean	Replace	Clean	Replace	Replace	Replace

*1: Displayed failure codes [**CA559**] and [**CA2249**]

S-3 Engine does not pick up smoothly

General causes why engine does not pick up smoothly
- Insufficient intake of air
- Insufficient supply of fuel
- Defective condition of fuel spray
- Improper selection of fuel
- Control by controller in derate mode
  (limiting injection rate (output) because of an error in electrical system)
- EGR valve stuck open
  (There is much EGR gas and intake of air is insufficient)

			Causes													
			Clogged air cleaner element	Stuck EGR valve	Defective contact of valve and valve seat	Improper valve clearance	Seized turbocharger or interference of turbocharger	Worn piston ring or cylinder liner	Clogged air breather hole of fuel tank cap	Leaking or clogged fuel piping or entry of air	Clogged fuel filter or strainer	Clogged feed pump gauze filter	Stuck or seized supply pump plunger	Malfunction of flow damper (Large leakage from injector)	Clogged injector or defective spray
Questions	Confirm recent repair history														
	Degree of use of machine	Operated for long period	△	△	△			△			△	△			
	Engine pick-up suddenly became worse			○			◎		○	○					○
	Non-specified fuel is used										◎	◎	◎		◎
	Filters have not been replaced according to Operation and Maintenance Manual		◎								◎	◎			
	Oil must be added more frequently							◎							
Check items	Dust indicator is red (if indicator is installed)		◎												
	Air breather hole of fuel tank cap is clogged								◎						
	There are rust and water in fuel drained from fuel tank										◎	◎			
	Fuel is leaking from fuel piping									◎					
	Priming pump is too light or too heavy to operate									◎	○	○			
	Immediately after engine is started, temperature of exhaust manifold of a cylinder is low												○		◎
	Exhaust gas color	Blue under light load						◎							
		Black	◎		○		◎								◎
	When engine is rotated, abnormal sound comes out from around cylinder head					◎									
	When engine is rotated, interference sound comes out from around turbocharger						◎								
	High idle speed under no load is normal, but speed suddenly drops when load is applied								○		◎	◎			
	Engine hunts (rotation is irregular)								○		○	◎			○
	Blow-by gas is excessive							◎							

			Remedy	Clean	Replace	Replace	Adjust	Replace	Replace	Clean	Correct	Clean	Clean	Replace	Replace	Correct
Troubleshooting	Inspect air cleaner directly			●												
	Carry out troubleshooting according to "EGR Valve Servo Error (*1)" indicated by code				●											
	Compression pressure is low					●			●							
	Inspect valve clearance directly						●									
	Turbocharger is heavy to rotate with hand							●								
	When air is bled from fuel system, air comes out										●					
	Inspect fuel filter and strainer directly											●				
	Inspect feed pump gauze filter directly												●			
	Carry out troubleshooting according to "Rail Press (Very) Low Error (*2)" indicated by code													●		
	When a cylinder is cut out for reduced cylinder mode operation, engine speed does not change														●	●

*1: Displayed failure codes [**CA1228**] and [**CA1625**]
*2: Displayed failure codes [**CA559**] and [**CA2249**]

S-4 Engine stops during operation

General causes why engine stops during operation
- Seized parts inside engine
- Insufficient supply of fuel
- Overheating
- Trouble in drive devices on applicable machine side
  → Carry out troubleshooting for devices on applicable machine

			Causes													
			Broken dynamic valve system (valve, rocker arm, etc.)	Broken or seized piston or connecting rod	Broken or seized crankshaft bearing	Broken or seized gear train	Insufficient fuel in tank	Clogged air breather hole of fuel tank cap	Leaking or clogged fuel piping	Clogged fuel filter or strainer	Clogged feed pump gauze filter	Broken or seized feed pump	Broken supply pump shaft or key	Stuck or seized supply pump plunger	Broken auxiliary equipment (pump, compressor, etc.)	Trouble in drive devices on applicable machine side
Questions	Confirm recent repair history															
	Degree of use of machine	Operated for long period								△	△					
	Engine	Made abnormal noise stopped suddenly	◎	◎	◎	◎						○	◎	○	◎	◎
		Overheated and stopped		◎	○										○	
		Stopped slowly					◎			○	○					
		Hunted and stopped					◎	○		○	○	○				
	Non-specified fuel is used									○	○	○		○		
	Filters have not been replaced according to Operation and Maintenance Manual									◎	◎					
	Fuel level monitor indicates low level (if monitor is installed)						◎									
Check items	Fuel tank is empty						◎									
	Air breather hole of fuel tank cap is clogged							◎								
	Fuel is leaking from fuel piping								◎							
	Priming pump is too light or too heavy to operate								◎	○	○					
	There are rust and water in fuel drained from fuel tank									◎	◎					
	There are metal particles in oil drained from oil pan			◎	◎						○	○				
	When engine is rotated with hand	Engine does not rotate at all		◎	◎											
		Engine rotates in opposite direction	◎													
		Engine moves by gear backlash				◎									◎	
		Supply pump shaft does not turn											◎			
	Engine rotates, but stops when load is applied to machine															◎

Troubleshooting	Inspect dynamic valve system directly		●													Carry out troubleshooting on applicable machine
	Inspect piston and connecting rod directly			●												
	Inspect crankshaft bearing directly				●											
	Inspect gear train directly					●										
	Inspect fuel filter and strainer directly									●						
	Inspect feed pump gauze filter directly										●					
	Inspect feed pump directly											●				
	Carry out troubleshooting according to "Rail Press (Very) Low Error (*1)" indicated by code												●	●		
	Engine rotates when pump auxiliary equipment (pump, compressor, etc.) is removed														●	
		Remedy	Replace	Replace	Replace	Replace	Add	Clean	Correct	Clean	Clean	Replace	Replace	Replace	Replace	—

*1: Displayed failure codes [**CA559**] and [**CA2249**]

S-5 Engine does not rotate smoothly

General causes why engine does not rotate smoothly
- Air in fuel system
- Defective speed sensor
  (Error at degree that it is not indicated)
- Defective EGR valve
- Defective bypass valve

			Causes												
			Low setting of low idle speed	Malfunction of EGR valve	Malfunction of bypass valve	Insufficient fuel in tank	Clogged air breather hole of fuel tank cap	Leaking or clogged fuel piping or entry of air	Clogged feed pump gauze filter	Clogged fuel filter or strainer	Malfunction of flow damper (Large leakage from injector)	Clogged injector or defective spray (dirt in injector)	Defective Ne speed sensor or wiring harness	Defective Bkup speed sensor or wiring harness
Questions	Confirm recent repair history													
	Degree of use of machine	Operated for long period		△	△				△	△				
	Engine hunts	At a certain speed range	○	○	○								○	○
		At low idle	◎					○	○	○	○	○	○	○
		Even when speed is raised		○	○		○						○	○
		On slopes				◎							○	○
	Filters have not been replaced according to Operation and Maintenance Manual								◎	◎				
Check items	Fuel tank is empty					◎								
	Air breather hole of fuel tank cap is clogged						◎							
	There are rust and water in fuel drained from fuel tank								○	○				
	Fuel is leaking from fuel piping							◎						
	Priming pump is too light or too heavy to operate							◎	○	○				
Troubleshooting	Carry out troubleshooting according to "EGR Valve Servo Error (*1)" indicated by code			●										
	Carry out troubleshooting according to "Bypass Valve Servo Error (*2)" indicated by code				●									
	When air is bled from fuel system, air comes out							●						
	Inspect feed pump gauze filter directly								●					
	Inspect fuel filter and strainer directly									●				
	When a cylinder is cut out for reduced cylinder mode operation, engine speed does not change										●	●		
	Carry out troubleshooting according to "Eng Ne Speed Sensor Error (*3)" indicated by code												●	
	Carry out troubleshooting according to "Eng Bkup Speed Sensor Error (*4)" indicated by code													●
		Remedy	Correct	Replace	Replace	Add	Clean	Correct	Replace	Replace	Replace	Correct	Correct	Correct

*1: Displayed failure codes [**CA1228**] and [**CA1625**]
*2: Displayed failure code [**CA1628**] and [**CA1629**]
*3: Displayed failure code [**CA689**]
*4: Displayed failure code [**CA778**]

S-6 Engine lack output (or lacks power)

General causes why engine lacks output
- Insufficient intake of air
- Insufficient supply of fuel
- Defective spray condition of fuel
- Improper selection of fuel
- Overheating
  → See "S-14 Coolant temperature becomes too high (Overheating)"
- Control by controller in derate mode
  (limiting injection rate (output) because of an error in electrical system)

			Causes																
			Clogged air cleaner element	Air leakage from air intake piping	Seized turbocharger or interference of turbocharger	Defective contact of valve and valve seat	Improper valve clearance	Worn piston ring or cylinder liner	Clogged air breather hole of fuel tank cap	Leaking or clogged fuel piping	Clogged fuel filter or strainer	Clogged feed pump gauze filter	Stuck or seized supply pump plunger	Clogged injector or defective spray (dirt in injector)	Defective drive of injector (signal or solenoid)	Defective installation of charge pressure sensor (air leakage)	Defective charge pressure sensor or wiring harness	Defective fuel temperature sensor or wiring harness
Questions	Confirm recent repair history																		
	Degree of use of machine	Operated for long period	△			△		△			△	△							
	Power was lost	Suddenly		○											○	○	○		
		Gradually	○			○		○			○	○		○		○			
	Non-specified fuel is used										○	○							
	Filters have not been replaced according to Operation and Maintenance Manual		◎																
	Engine oil must be added more frequently					○	○	○											
Check items	Dust indicator is red (if indicator is installed)		◎																
	Air breather hole of fuel tank cap is clogged								◎										
	Fuel is leaking from fuel piping									◎									
	Output becomes insufficient after short stop of operation																		◎
	Exhaust gas is	Black	◎	◎															
		Blue under light load			◎														
	Immediately after engine is started, temperature of exhaust manifold of a cylinder is low													◎					
	When engine is rotated, interference sound comes out from around turbocharger			◎															
	When engine is rotated, abnormal sound comes out from around cylinder head						◎												
	High idle speed is too high														○				
	High idle speed under no load is normal, but speed suddenly drops when load is applied										◎	◎	○						
	Engine does not pick up smoothly and combustion is irregular			◎					○	○				◎					
	Engine hunts (rotation is irregular)								○	○	○	○							
	Blow-by gas is excessive				◎														
Troubleshooting	Inspect air cleaner directly		●																
	Inspect air intake piping directly			●															
	Boost pressure is low		●	●	●														
	Compression pressure is low					●		●											
	Inspect valve clearance directly						●												
	Inspect fuel filter and strainer directly										●								
	Inspect feed pump gauze filter directly											●							
	Carry out troubleshooting according to "Rail Press (Very) Low Error (*1)" indicated by code												●						
	When a cylinder is cut out for reduced cylinder mode operation, engine speed does not change													●	●				
	Inspect boost pressure sensor mount directly															●			
	Carry out troubleshooting according to "Chg Air Press Sensor High (Low) Error (*2)" indicated by code																●		
	Carry out troubleshooting according to "Fuel Temp Sensor High (Low) Error (*3)" indicated by code																		●
		Remedy	Clean	Correct	Replace	Replace	Adjust	Replace	Clean	Correct	Replace	Clean	Replace	Replace	Replace	Correct	Replace	Replace	

*1: Displayed failure code [**CA559**] and [**CA2249**]
*2: Displayed failure code [**CA122**] and [**CA123**]
*3: Displayed failure code [**CA263**] and [**CA265**]

S-7 Exhaust gas is black (incomplete combustion)

General causes why exhaust gas is black

- Insufficient intake of air
- Excessive injection of fuel
- Defective condition of fuel injection
- Improper selection of fuel
- Overheating
  → See "S-14 Coolant temperature becomes too high (Overheating)"
- Control by controller in derate mode
  (limiting injection rate (output) because of an error in electrical system)
- EGR valve stuck open
  (There is much EGR gas and intake of air is insufficient)
- Clogged EGR gas pressure piping
  (Exhaust gas is mixed in intake air during acceleration and deceleration)

			Causes																
			Clogged air cleaner element	Seized turbocharger or interference of turbocharger	Stuck EGR valve	Clogged EGR gas pressure piping	Defective contact of valve and valve seat	Improper valve clearance	Leakage of air between turbocharger and cylinder head	Crushed or clogged muffler	Worn piston ring or cylinder liner	Stuck or seized supply pump plunger	Clogged or seized injector	Abnormally worn injector	Clogged fuel spill piping (on cylinder head side)	Improper fuel injection timing	Improper fuel injection pressure	Defective coolant temperature sensor or wiring harness
Questions	Confirm recent repair history																	
	Degree of use of machine	Operated for long period	△		△		△				△		△					
	Exhaust gas color	Suddenly became black		◎	○	○						○	○					
		Gradually became black	◎			◎			○				○	○				
		Blue under light load									◎							
	Non-specified fuel is used											○	○					
	Oil must be added more frequently										◎							
	Power was lost	Suddenly		◎						○		○	○					
		Gradually	○				○		○		○							
Check items	Dust indicator is red (if indicator is installed)		◎															
	Muffler is crushed									◎								
	Air leaks between turbocharger and cylinder head or clamp is loosened								◎									
	Engine is operated in low-temperature mode at normal temperature														○	○	○	
	Immediately after engine is started, temperature of exhaust manifold of a cylinder is low											○	◎					
	When engine is rotated, interference sound comes out from around turbocharger		◎															
	When engine is rotated, abnormal sound comes out from around cylinder head							◎										
	Torque converter stall speed or pump relief speed is high (Fuel is injected excessively)													○	○			
	Exhaust noise is abnormal		○						◎			○						
	Engine does not pick up smoothly and combustion is irregular		○	○			○	○	○		○	◎						
	Blow-by gas is excessive									◎								
	When spill hose from injector is disconnected, abnormally much fuel spills												◎					
Troubleshooting	Inspect air cleaner directly		●															
	Turbocharger is heavy to rotate with hand			●														
	Carry out troubleshooting according to "EGR Valve Servo Error (*1)" indicated by code				●													
	Inspect EGR gas pressure piping directly (*2)					●												
	Compression pressure is low						●				●							
	Inspect valve clearance directly							●										
	When muffler is removed, exhaust gas color improves									●								
	Carry out troubleshooting according to "Rail Press (Very) Low Error (*3)" indicated by code											●		●				
	When a cylinder is cut out for reduced cylinder mode operation, engine speed does not change												●					
	Inspect fuel spill piping (on cylinder head side) directly														●			
	Carry out troubleshooting according to "Coolant Temp Sens High (Low) Error (*4)" indicated by code																	●
		Remedy	Clean	Replace	Replace	Replace	Replace	Adjust	Correct	Replace	Replace	Replace	Replace	Replace	Correct	Adjust	Adjust	Replace

*1: Displayed failure codes [**CA1228**] and [**CA1625**]
*2: EGR gas pressure piping
Remove 2 EGR gas pressure pipes (2) and check their inside for clogging.

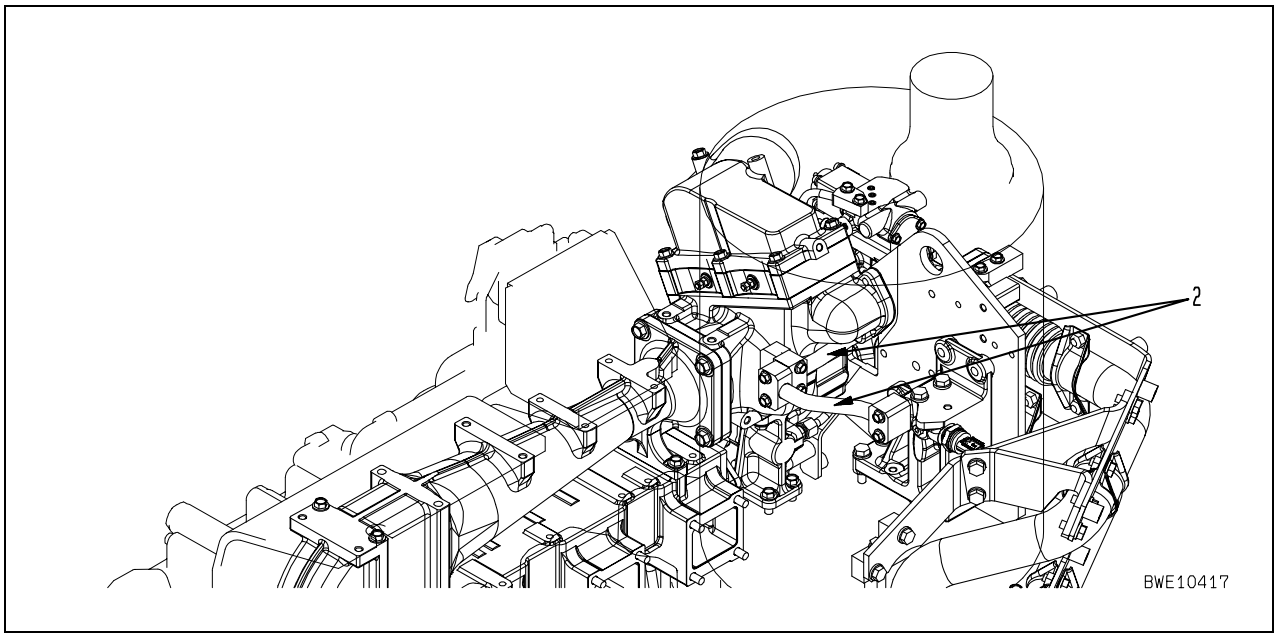

*3: Displayed failure codes [**CA559**] and [**CA2249**]
*4: Displayed failure codes [**CA144**] and [**CA145**]

S-8 Oil consumption is excessive (or exhaust gas is blue)

General causes why oil consumption is excessive
- Abnormal consumption of oil
- Long-time operation of engine at low idle or high idle (Do not run engine at idle for more than 20 minutes continuously)
- External leakage of oil
- Wear of parts in lubrication system

			Causes																
					Turbocharger														
			Dust sucked in from intake system	Worn or damaged valve (stem, guide, or seal)	Worn seal at turbocharger end	Worn seal at blower end	Oil leakage from EGR valve stem	Clogged breather or breather hose	Broken piston ring	Worn piston ring or cylinder liner	Worn or damaged rear oil seal	Broken oil cooler	Oil leakage from oil cooler	Oil leakage from oil filter	Oil leakage from oil piping	Oil leakage from oil drain plug	Oil leakage from oil pan, cylinder head, etc.
Questions	Confirm recent repair history																		
	Degree of use of machine	Operated for long period		△	△	△	△			△									
	Oil consumption suddenly increased								◎			○							
	Oil must be added more frequently						○			◎		○							
	Oil becomes dirty quickly							○	○	◎									
Check items	Outside of engine is dirty with oil												◎	◎	◎	◎	◎		
	There are loose piping clamps in intake system		◎																
	Inside of turbocharger intake outlet pipe is dirty with oil					◎													
	Inside of turbocharger exhaust outlet pipe is dirty with oil			○	◎														
	There is oil in coolant											◎							
	Oil level in damper chamber is high										◎								
	Exhaust gas is blue under light load						○		◎	◎									
	Amount of blow-by gas	Excessive		○		○			◎	◎									
		None						◎											
Troubleshooting	There is dust in intake manifold		●																
	Inside of intake manifold is abnormally dirty			●															
	Play of turbocharger shaft is excessive				●	●													
	Exhaust port of EGR valve is dirty with oil						●												
	Check breather and breather hose directly							●											
	Compression pressure is low								●	●									
	Inspect rear oil seal directly										●								
	Leakage from oil cooler is detected by pressure test											●	●						
	Oil leaks out of engine													●	●	●	●		
		Remedy	Correct	Correct	Replace	Replace	Replace	Clean	Replace	Replace	Correct	Replace	Replace	Correct	Correct	Correct	Correct		

S-9 Oil becomes dirty quickly

General causes why oil becomes dirty quickly
- Entry of exhaust gas into oil due to internal wear
- Clogging of lubrication passage
- Use of improper fuel
- Use of improper oil
- Overload operation

			Causes										
			Defective seal at turbocharger turbine end	Worn EGR valve guide	Worn valve or valve guide	Worn piston ring or cylinder liner	Clogged breather or breather hose	Clogged oil cooler	Clogged oil filter	Defective oil filter safety valve	Clogged turbocharger lubrication drain tube	Exhaust gas color is bad
Questions	Confirm recent repair history											
	Degree of use of machine	Operated for long period	△	△	△	△						
	Non-specified fuel is used								○			
	Engine oil must be added more frequently			○		◎						
	Even when engine oil temperature rises, oil filter clogging monitor indicates clogging (if monitor is installed)								◎	○		
Check items	There are metal particles in oil drained from oil pan				○	○			◎			
	Inside of exhaust pipe is dirty with oil				◎							
	Engine oil temperature rises quickly							◎				
	Exhaust gas is	Blue under light load				◎						
		Black										◎
	Blow-by gas	Comes out excessively	○		○	◎					○	
		Does not come out at all					◎					
Troubleshooting	Play of turbocharger shaft is excessive		●									See S-7
	Exhaust port of EGR valve is dirty with oil			●								
	Compression pressure is low				●	●						
	Check breather and breather hose directly						●					
	Inspect oil cooler directly							●				
	Inspect oil filter directly								●			
	Spring of oil filter safety valve is hitched or broken									●		
	Inspect turbocharger lubrication drain tube directly										●	
		Remedy	Replace	Replace	Replace	Replace	Clean	Clean	Replace	Replace	Clean	—

S-10 Fuel consumption is excessive

General causes why fuel consumption is excessive
- Leakage of fuel
- Defective condition of fuel injection (fuel pressure or injection timing)
- Excessive injection of fuel

			Causes									
			Fuel leakage inside head cover	Fuel leakage from fuel filter, piping, etc.	Defective feed pump oil seal	Defective supply pump plunger	Defective common rail pressure	Defective spray by injector	Malfunction of injector	Improper fuel injection timing	Defective coolant temperature sensor or wiring harness
Questions	Confirm recent repair history										
	Degree of use of machine	Operated for long period			△	△		△			
	Fuel consumption	Is large compared to other machines of same model					○		○	○	○
		Gradually increased				○		○			
		Suddenly increased	○	○							
Check items	There is external leakage of fuel from engine			◎							
	Combustion is irregular							◎			
	Engine oil level rises and oil smells of diesel fuel		◎		◎						
	Immediately after engine is started, temperature of exhaust manifold of a cylinder is low							◎			
	Low idle speed is high								○		
	Torque converter stall speed or pump relief speed is high								○		
	Exhaust gas is	Black					○	○		○	○
		White	○								
Troubleshooting	Remove head cover and inspect inside directly		●								
	Inspect feed pump oil seal directly				●						
	Carry out troubleshooting according to "Rail Press (Very) Low Error (*1)" indicated by code					●					
	When a cylinder is cut out for reduced cylinder mode operation, engine speed does not change							●			
	When spill hose from injector is disconnected, much fuel spills								●		
	Carry out troubleshooting according to "Coolant Temp Sens High (Low) Error (*2)" indicated by code										●
	Confirm with monitoring function on applicable machine side						●			●	
		Remedy	Correct	Correct	Replace	Replace	Correct	Replace	Replace	Correct	Correct

*1: Displayed failure codes [**CA559]** and [**CA2249**]
*2: Displayed failure codes [**CA144**] and [**CA145**]

S-11 Oil is in coolant (or coolant spurts back or coolant level goes down)

General causes why oil is in coolant
- Leakage in lubrication system
- Leakage in cooling system

			Causes						
			Broken cylinder head or head gasket	Crack in cylinder block	Damaged cylinder liner O-ring or holes caused by pitting	Insufficient protrusion of cylinder liner	Broken oil cooler core or O-ring	Broken hydraulic oil cooler or power train oil cooler on applicable machine side
Questions	Confirm recent repair history							
	Degree of use of machine	Operated for long period			△		△	
	Oil level	Suddenly increased	○				○	○
		Gradually increased		○	○			
	Hard water is used as coolant				○		○	
Check items	Oil level has risen and oil is milky			○	○		◎	
	There are excessive air bubbles in radiator and coolant spurts back		◎			◎		
	Hydraulic oil or power train oil on applicable machine side is milky							◎
	When hydraulic oil or power train oil is drained, water flows out							◎
Troubleshooting	Leakage from cylinder head is detected by pressure test		●					Carry out troubleshooting on applicable machine side
	Inspect cylinder block and liner directly			●	●			
	Inspect cylinder liner directly					●		
	Leakage from oil cooler is detected by pressure test						●	
		Remedy	Replace	Replace	Replace	Replace	Replace	—

S-12 Oil pressure drops

General causes why oil pressure drops
- Leakage from, clogging, or wear of lubrication system
- Defective oil pressure control
- Improper selection of fuel (improper viscosity)
- Deterioration of oil due to overheating

			Causes												
			Worn journal of bearing	Lack of oil in oil pan	Coolant or fuel in oil	Clogged strainer in oil pan	Clogged or broken pipe in oil pan	Defective oil pump	Defective oil pump relief valve	Clogged oil filter	Leaking, crushed, or clogged hydraulic piping	Defective EGR oil pump	Leaking EGR hydraulic piping	Defective oil pressure sensor or wiring harness
Questions	Confirm recent repair history													
	Degree of use of machine	Operated for long period	△					△		△		△		
	Oil pressure monitor indicates low oil pressure (if monitor is installed)								○	◎				
	Non-specified oil is used		○							○				
	Filters have not been replaced according to Operation and Maintenance Manual									◎				
Check items	Oil pressure monitor (if installed)	Indicates pressure drop at low idle	◎						○			○		
		Indicates pressure drop at low, high idle		○		◎	◎	◎	○			○	○	
		Indicates pressure drop on slopes		◎										
		Sometimes indicates pressure drop							◎					○
	Oil level monitor indicates oil lever drop (if monitor is installed)			◎										
	Oil level in oil pan is low			◎										
	External hydraulic piping is leaking or crushed										◎		◎	
	Oil is milky or smells of diesel oil				◎									
	There are metal particles in oil drained from oil pan		◎											
	There are metal particles in oil drained from oil filter		◎					○				○		
Troubleshooting	There are metal particles in oil filter		●		See S-13									
	Inspect oil pan strainer and pipe directly					●	●							
	Oil pump is heavy to rotate or it has play							●						
	Valve spring of oil pump relief valve is fatigued or damaged								●					
	Inspect oil filter directly									●				
	Relief valve of EGR oil pump is damaged or oil leaks through it											●		
	Inspect EGR hydraulic piping directly												●	
	Carry out troubleshooting according to "Eng Oil Press Sensor High (Low) Error (*1)" indicated by code													●
		Remedy	Replace	Add	—	Clean	Clean	Replace	Adjust	Replace	Correct	Replace	Replace	Replace

*1: Displayed codes [**CA135**] and [**CA141**]

S-13 Oil level rises (Entry of coolant or fuel)

General causes why oil level rises
- Coolant in oil (milky)
- Fuel in oil (smells diluted diesel fuel)
- ★ If oil is in coolant, carry out troubleshooting for "S-11 Oil is in coolant"

			Causes											
			Cracked EGR cooler (Entry of coolant)	Broken cylinder head or head gasket	Fuel leakage inside cylinder block	Cracks inside cylinder block	Damaged cylinder liner O-ring or holes caused by pitting	Worn or damaged rear oil seal	Broken oil cooler core or O-ring	Clogged water pump drain hole (breather hole) or defective seal	Defective thermostat seat	Defects in supply pump	Defective seal of auxiliary equipment (pump and compressor)
Questions	Confirm recent repair history												
	Degree of use of machine	Operated for long period					△	△		△			△
	Fuel consumption has increased				◎							◎	
	Coolant must be added more frequently		○	○							◎		
Check items	There is oil in coolant			○		○	○		◎				
	Oil smells of diesel fuel				◎							◎	
	Oil is milky		○	○							◎		
	When engine is started, water drops from muffler		○	○									
	When radiator cap is removed and engine is run at low idle, abnormally many bubbles come out or coolant spurts back			◎			○						
	Exhaust gas is white				○						○		
	Water pump drain hole (breather hole) is clogged									◎			
	When water pump drain hole (breather hole) is cleaned, coolant flows out									◎			
	Oil level in damper chamber on applicable machine side is low							◎					
	Oil level in hydraulic tank on applicable machine is low												◎
Troubleshooting	When EGR cooler outlet gas piping is removed, coolant containing antifreeze flows out (*1).		●										
	Compression pressure is low			●									
	Remove and inspect head cover directly				●								
	Inspect cylinder block and liner directly					●	●						
	Inspect rear oil seal directly							●					
	Leakage from oil cooler is detected by pressure test								●				
	Remove and inspect water pump directly									●			
	Remove and inspect thermostat cover directly										●		
	Remove and inspect supply pump directly											●	
	Inspect seal of auxiliary equipment directly												●
		Remedy	Replace	Replace	Correct	Replace	Replace	Correct	Replace	Replace	Correct	Replace	Replace

*1: EGR cooler outlet gas piping
Loosen 4 mounting bolts (1) of the EGR cooler outlet gas piping and see if the coolant flows out.
A little condensate produced from cooled exhaust gas may flow out. If it is colorless and transparent, however, it is not a problem.

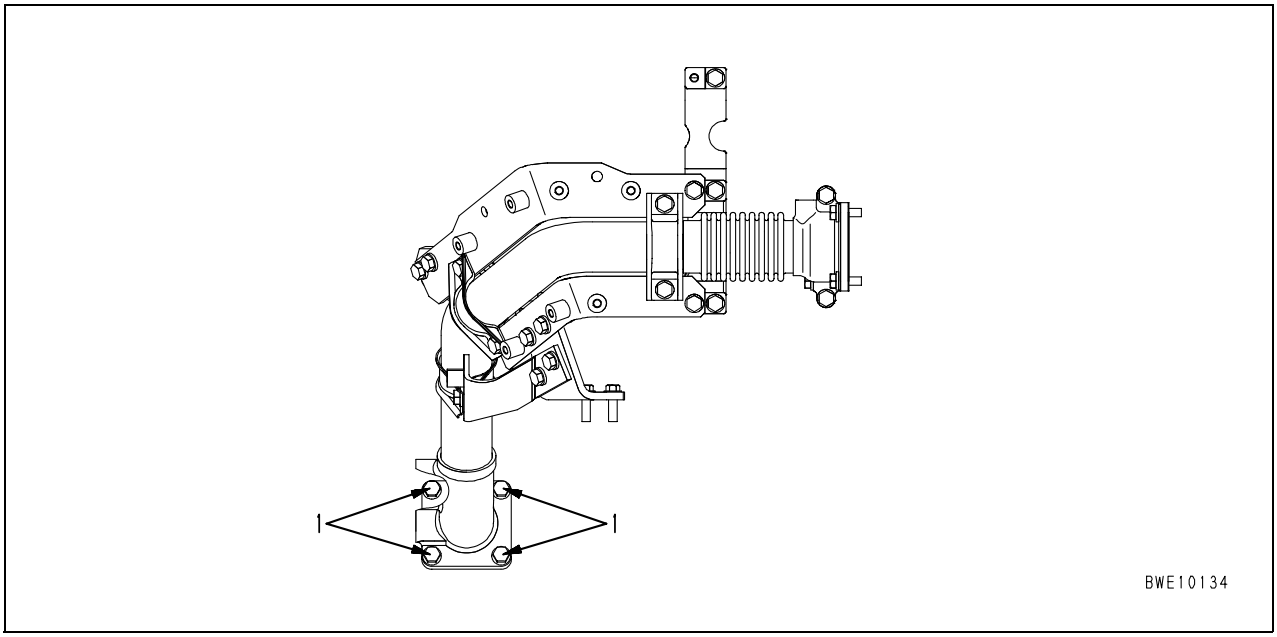

S-14 Coolant temperature becomes too high (Overheating)

General causes why coolant temperature becomes too high

- Lack of cooling air (deformation or damage of fan)
- Drop in heat dissipation efficiency
- Trouble in coolant circulation system
- Rise of oil temperature in power train
  → Carry out troubleshooting on applicable machine side

			Causes													
			External leakage of coolant from EGR cooler	Broken cylinder head or head gasket	Damaged cylinder liner O-ring or holes caused by pitting	Clogged or broken oil cooler	Low coolant level	Broken water pump	Malfunction of thermostat	Clogged or crushed radiator fins	Clogged radiator core	Defective radiator cap (pressure valve)	Malfunction of fan	Defective coolant temperature gauge	Rise of power train oil temperature on applicable machine side
Questions	Confirm recent repair history														
	Degree of use of machine	Operated for long period	△	△	△					△	△				
	Overheating	Occurred suddenly	○				○	◎					○		
		Has continued at low level							○	◎	◎		○		
	Coolant temperature gauge (if installed)	Rises quickly					○		◎						
		Does not go down from red range												◎	
Check items	Radiator coolant level monitor indicates low (if monitor is installed)		○				◎								
	Engine oil level has risen and oil is milky				◎	○									
	Milky oil is floating on coolant					◎									
	There are many bubbles in radiator and coolant spurts back			◎											
	When light applied to radiator core, no light passes through									◎					
	Dirt and mud are accumulated in radiator shroud and undercover on applicable machine side									◎			◎		
	Coolant is leaking because of cracks in hose or loose clamps						◎								
	Coolant flows out from radiator overflow hose											◎			
	Power train oil temperature enters red range faster than engine coolant temperature (if oil temperature gauge and coolant temperature gauge are installed)														◎
Troubleshooting	Inspect EGR cooler for coolant leakage		●												Carry out troubleshooting on applicable machine side
	Compression pressure is low			●											
	Inspect cylinder liner directly				●										
	Inspect oil cooler directly					●									
	Temperature difference between upper and lower tanks of radiator is large							●							
	Thermostat does not open at cracking temperature								●						
	Temperature difference between upper and lower tanks of radiator is slight									●					
	Inspect radiator core directly										●				
	Cracking pressure of radiator cap is low											●			
	Inspect fan directly												●		
	Coolant temperature is normal													●	
		Remedy	Replace	Replace	Replace	Replace	Add	Replace	Replace	Correct	Correct	Replace	Correct	Replace	—

S-15 Abnormal noise is made

General causes why abnormal noise is made
- Abnormality due to defective parts
- Abnormal combustion
- Air sucked in from intake system

★ Judge if the noise is an internal noise or an external noise before starting troubleshooting.

★ The engine is operated in the low-temperature mode while it is not warmed up sufficiently. Accordingly, the engine sound becomes a little larger. This does not indicate abnormality, however

★ When the engine is accelerated, it is operated in the acceleration mode and its sound becomes a little larger for up to about 5 seconds. This does not indicate abnormality, however

			Causes													
			Leakage of air between turbocharger and cylinder head	Interference of turbocharger or seized turbocharger	Cracked or leaking EGR gas piping	Broken dynamic valve system (valve, rocker lever, etc.)	Defective inside of muffler (Removal of bulkhead)	Improper valve clearance	Excessive wear of piston ring or cylinder liner	Improper gear train backlash	Removed or seized gear train bushing	Deformed cooling fan	Clogged or seized injector	Dirt caught in injector	Improper fuel injection timing (Defective coolant temperature sensor)
Questions	Confirm recent repair history															
	Degree of use of machine	Operated for long period							△							
	Abnormal noise	Gradually increased							○			○				
		Suddenly increased		○	○	○					○					
	Non-specified fuel is used												○			
	Oil must be added more frequently								◎							
	There are metal particles in oil drained from oil filter								◎		◎					
Check items	Air leaks between turbocharger and cylinder head		◎													
	When engine is rotated, interference sound comes out from around turbocharger			◎												
	When engine is rotated, abnormal sound comes out from around EGR gas piping				◎											
	When engine is rotated, abnormal sound comes out from around cylinder head					◎		◎								
	When engine is rotated, beat noise comes out from around muffler						◎									
	Immediately after engine is started, temperature of exhaust manifold of a cylinder is low												◎	○		
	Exhaust gas is	Blue under light load							◎							
		Black	○	◎				○								
	Engine does not pick up smoothly and combustion is irregular												◎			
	Abnormal noise is loud when engine is accelerated							○		○		○	○			
	Blow-by gas is excessive								◎							
Troubleshooting	Turbocharger is heavy to rotate with hand			●												
	Inspect EGR gas piping directly				●											
	Inspect dynamic valve system directly					●										
	When muffler is removed, abnormal noise disappears						●									
	Inspect valve clearance directly							●								
	Compression pressure is low								●							
	Inspect gear train directly									●	●					
	Inspect fan directly											●				
	When a cylinder is cut out for reduced cylinder mode operation, engine speed does not change												●	●		
	Abnormal noise comes out only at start of engine													●		
	Confirm with monitoring function on applicable machine side														●	
	Remedy		Replace	Replace	Replace	Correct	Replace	Adjust	Replace	Replace	Replace	Correct	Replace	Correct	Correct	

S-16 Vibration is excessive

General causes why vibration is excessive
- Defective parts (abnormal wear, breakage, etc.)
- Misalignment between engine and applicable machine
- Abnormal combustion

★ If abnormal noise is made and vibration is excessive, carry out troubleshooting for "S-15 Abnormal noise is made", too

			Causes									
			Stuck dynamic valve system (valve, rocker lever, etc.)	Worn main bearing or connecting rod bearing	Improper gear train backlash	Worn camshaft bushing	Improper injection timing	Loose engine mounting bolts or broken cushions	Misalignment between engine and devices on applicable machine side	Worn front support spigot joint	Broken parts in damper on applicable machine side
Questions	Confirm recent repair history										
	Degree of use of machine	Operated for long period		△		△		△		△	
	Vibration	Suddenly increased	○								○
		Gradually increased		○		○		○		○	
	Non-specified fuel is used			○		○					
Check items	There are metal particles in oil drained from oil filter			◎		◎					
	There are metal particles in oil drained from oil pan			◎		◎					
	Oil pressure is low at low idle			○		○					
	Vibration occurs at medium speed							○			○
	Vibration follows engine speed				○			○	○	○	○
	Exhaust gas is black		◎								
Troubleshooting	Inspect dynamic valve system directly		●								
	Inspect main bearing and connecting rod bearing directly			●							
	Inspect gear train directly				●						
	Inspect camshaft bushing directly					●					
	Confirm with monitoring function on applicable machine side						●				
	Inspect engine mounting bolts and cushions directly							●			
	Radial runout or facial runout is detected								●		
	Inspect front support spigot joint directly									●	
	Inspect inside of damper directly										●
		Remedy	Replace	Replace	Replace	Replace	Adjust	Replace	Adjust	Replace	Replace

D155AX-6 Bulldozer

Form No. SEN00852-01

© 2006 KOMATSU
All Rights Reserved
Printed in Japan 05-06 (02)

BULLDOZER

D155AX-6

Machine Model	Serial Number
D155AX-6	80001 and up

50 Disassembly and assembly

General information on disassembly and assembly

General information on disassembly and assembly 2
How to read this manual 2
List of adhesives 4
Special tool list 7

General information on disassembly and assembly

How to read this manual

1. Removal and installation of assemblies

Special tools

- Special tools which are deemed necessary for removal or installation of parts are described as **A1**,•••**X1** etc. and their part names, part numbers and quantities are described in the special tool list.
- Also the following information is described in the special tool list.

1) Necessity
   - ■ : Special tools that cannot be substituted and should always be used (installed).
   - ● : Special tools that will be useful if available and are substitutable with commercially available tools.
2) Distinction of new and existing special tools
   - N : Tools newly developed for this model. They respectively have a new part number.
   - R : Tools with upgraded part numbers. They are remodeled from already available tools for other models.
   - Blank: Tools already available for other models. They can be used without any modification.
3) Circle mark ○ in sketch column:
   - The sketch of the special tool is presented in the section of "Sketches of special tools".
   - Part No. of special tools starting with 79*T-***-****:
     means that they can not be supplied from Komatsu in Japan (i.e. locally made parts).

★ General tools that are necessary for removal or installation are described as [1], [2]•••etc. and their part names, part numbers and quantities are not described.

Removal

- The "Removal" section contains procedures and precautions for implementing the work, know how and the amount of oil or coolant to be drained.
- Various symbols used in the "Removal" section are explained and listed below.

⚠ **: Precautions related to safety in execution of work.**

★: This mark gives guidance or precautions when doing the procedure.

[*1] : This mark shows that there are instructions or precautions for installing parts.

: This mark shows the amount of oil or coolant to be drained.

: Weight of part or component

Installation

- Except where otherwise instructed, installation of parts is done in the reverse order of removal.
- Instructions and precautions for installing parts are shown with [*1] mark in the "Removal" section, identifying which step the instructions are intended for.
- Marks shown in the "Installation" section stand for the following.

⚠ **: Precautions related to safety in execution of work.**

★: This mark gives guidance or precautions when doing the procedure.

: Type of coating material

: Tightening torque

: Quantity of oil or coolant to be added

Sketches of special tools

- Various special tools are illustrated for the convenience of local manufacture.

2. Disassembly and assembly of assemblies

Special tools

- Special tools which are deemed necessary for disassembly and assembly of parts are described as **A1**,•••**X1** etc. and their part names, part numbers and quantities are described in the special tool list.
- Also the following information is described in the special tool list.

1) Necessity
   - ■ : Special tools that cannot be substituted and should always be used (installed).
   - ● : Special tools that will be useful if available and are substitutable with commercially available tools.
2) Distinction of new and existing special tools
   - N : Tools newly developed for this model. They respectively have a new part number.
   - R : Tools with upgraded part numbers. They are remodeled from already available tools for other models.
   - Blank: Tools already available for other models. They can be used without any modification.
3) Circle mark ○ in sketch column:
   - The sketch of the special tool is presented in the section of "Sketches of special tools".
   - Part No. of special tools starting with 79∗T-∗∗∗-∗∗∗∗:
     means that they can not be supplied from Komatsu in Japan (i.e. locally made parts).

★ General tools that are necessary for disassembly and assembly are described as [1], [2]•••etc. and their part names, part numbers and quantities are not described.

Disassembly

- In "Disassembly" section, the work procedures, precautions and know-how for carrying out those procedures, and quantity of the oil and coolant drained are described.
- The meanings of the symbols used in "Disassembly" section are as follows.

⚠ **: Precautions related to safety in execution of work.**

★: This mark gives guidance or precautions when doing the procedure.

: Quantity of oil or coolant drained

Assembly

- In "Assembly" section, the work procedures, precautions and know-how for carrying out those procedures, and quantity of the oil and coolant added are described.
- The meanings of the symbols used in "Assembly" section are as follows.

⚠ **: Precautions related to safety in execution of work**

★: This mark gives guidance or precautions when doing the procedure.

: Type of coating material

: Tightening torque

: Quantity of oil or coolant to be added

Sketches of special tools

- Various special tools are illustrated for the convenience of local manufacture.

List of adhesives

★ The recommended coating materials such as adhesives, gasket sealants, and greases used for disassembly and assembly are listed below.
★ For coating materials not listed below, use the equivalent of products shown in this list.

Category	Komatsu code	Part No.	Q'ty	Container	Main features and applications
Adhesive	LT-1A	790-129-9030	150 g	Tube	• Used to prevent rubber gaskets, rubber cushions, and cork plugs from coming out.
	LT-1B	790-129-9050	20 g (2 pcs.)	Polyethylene container	• Used for plastic (except polyethylene, polypropylene, tetrafluoroethylene and vinyl chloride), rubber, metal, and non-metal parts which require immediate and strong adhesion.
	LT-2	09940-00030	50 g	Polyethylene container	• Features: Resistance to heat and chemicals. • Used to fix and seal bolts and plugs.
	LT-3	790-129-9060 (Set of adhesive and hardener)	Adhesive: 1 kg Hardener: 500 g	Can	• Used to stick and seal metal, glass, and plastics.
	LT-4	790-129-9040	250 g	Polyethylene container	• Used to seal plugs.
	Holtz MH 705	790-129-9120	75 g	Tube	• Heat-resistant seal used to repair engines.
	ThreeBond 1735	790-129-9140	50 g	Polyethylene container	• Quick-setting adhesive. • Setting time: Within 5 sec. to 3 min. • Used mainly to stick metals, rubbers, plastics, and woods.
	Aron-alpha 201	790-129-9130	2 g	Polyethylene container	• Quick-setting adhesive. • Quick-setting type. (max. strength is obtained after 30 minutes) • Used mainly to stick rubbers, plastics, and metals.
	Loctite 648-50	79A-129-9110	50 cc	Polyethylene container	• Features: Resistance to heat and chemicals. • Used for fitted portions used at high temperatures.
Gasket sealant	LG-1	790-129-9010	200 g	Tube	• Used to stick or seal gaskets and packings of power train case, etc.
	LG-5	790-129-9080	1 kg	Polyethylene container	• Used to seal various threaded portions, pipe joints, and flanges. • Used to seal tapered plugs, elbows, and nipples of hydraulic piping.
	LG-6	790-129-9020	200 g	Tube	• Features: Silicon-based heat and cold-resistant sealant. • Used to seal flange surfaces and threaded portions. • Used to seal oil pan, final drive case, etc.
	LG-7	790-129-9070	1 kg	Tube	• Features: Silicon-based quick-setting sealant. • Used to seal flywheel housing, intake manifold, oil pan, thermostat housing, etc.
	ThreeBond 1211	790-129-9090	100 g	Tube	• Gasket sealant used to repair engine.
	ThreeBond 1207B	419-15-18131	100 g	Tube	• Features: Silicon-based, heat and cold-resistant, vibration-resistant, impact-resistant sealant. • Used to seal transfer case, etc.

Classification	Komatsu code	Part number	Content	Container	Main feature, application
Lubricant with molybdenum disulfide	LM-G	09940-00051	60 g	Can	• To be sed as lubricant (anti squeaking) for sliding part.
	LM-P	09940-00040	200 g	Tube	• To be used for press fit, shrink fit and preventing scratching or seizure of thread. • To be used as lubricant for linkage and bearing etc..
Grease	G2-LI	SYG2-400LI SYG2-350LI SYG2-400LI-A SYG2-160LI SYGA-160CNLI	Various kinds	Various kinds	• Versatile type
	G2-CA	SYG2-400CA SYG2-350CA SYG2-400CA-A SYG2-160CA SYGA-160CNCA	Various kinds	Various kinds	• To be used for the place where the bearing designed for normal temperature and low load condition is used and contacts water and steam.
	Grease with molybdenum disulphide LM-G(G2-M)	SYG2-400M SYG2-400M-A SYGA-16CNM	400 g x 10 400 g x 20 16 kg	Bellows type Can	• To be used for heavy load places.
	Hyper white grease G2-T GO-T(*) *: For cold region	SYG2-400T-A SYG2-16CNT SYG0-400T-A (*) SYG0-16CNT (*)	400 g 16 kg	Bellows type Can	• Higher anti seizure and heat resistance than grease with molybdenum disulphide • Body dirt is not distinctive due to white color.
	Biological grease G2-B G2-BT(*) *: For heat resistance and heavy load	SYG2-400B SYGA-16CNB SYG2-400BT (*) SYGA-16CNBT (*)	400 g 16 kg	Bellows type Can	• To be shortly dissolved by a bacteria in nature so that the influence to microorganism and animals and plants is suppressed to the minimum.
Primer	Sunstar primer for painting plane 580 super	417-926-3910	20 ml	Glass container	For adhesion of cab glass: • To be used as primer for cab side. (Term of validity: 4 months after manufacturing)
	Sunstar primer for glass 580 super		20 ml	Glass container	For adhesion of cab glass: • To be used as primer for glass side. (Term of validity: 4 months after manufacturing)
	Sunstar primer for painting plane 435-95	22M-54-27230	20 ml	Glass container	For adhesion of cab glass: • To be used as primer for painting plane of cab side. (Term of validity: 4 months after manufacturing)
	Sunstar primer for glass 435-41	22M-54-27240	150 ml	Steel can	For adhesion of cab glass: • To be used as primer for black ceramic coated plane of glass side and polycarbonate hard coat plane. (Term of validity: 4 months after manufacturing)
	Sunstar primer for sash GP-402	22M-54-27250	20 ml	Glass container	For adhesion of cab glass: • To be used as primer for sash (Alumite surface treatment) (Term of validity: 4 months after manufacturing)

Classification	Komatsu code	Part number	Content	Container	Main feature, application	
Adhesive compound	Sunstar penguin seal 580 super "S" or "W"	417-926-3910	320 ml	Polyethylene container	For adhesion of cab glass	• "S" and "W" are used as glass adhesive compound in high temperature (April - October) and in low temperature (October -April) respectively. (Term of validity: 4 months after manufacturing)
	Sika Ltd, Japan Sika Flex 256HV	20Y-54-39850	310 ml	Polyethylene container		• To be used as glass adhesive compound. (Term of validity: 6 months after manufacturing)
	Sunstar pengiun super 560	22M-54-27210	320 ml	ECOCART (special container)		• To be used as glass adhesive compound. (Term of validity: 6 months after manufacturing)
Coaking compound	Sunstar pengiun seal No. 2505	417-926-3920	320 ml	Polyethylene container		• To be used as seal for joints of glass. (Term of validity: 4 months after manufacturing)
	Sekisui silicone sealant	20Y-54-55130	333 ml	Polyethylene container		• To be used for seal of front window. (Term of validity: 6 months after manufacturing)
	GE Toshiba Silicones Tosseal 381	22M-54-27220	333 ml	Cartridge		• To be used as seal for joints of glass. semi-transparent white seal (Term of validity: 12 months after manufacturing)

Special tool list

★ Tools with part number 79○T-○○○-○○○○ cannot be supplied (they must be locally manufactured).
★ Necessity : ■. . . . . Cannot be substituted, should always be installed (used)
: ●. . . . . Extremely useful if available, can be substituted with commercially available part
★ New/Remodel: N. . . . . Tools newly developed for this model and given new part Nos.
: R. . . . . Tools remodeled from tools already available for other models and given upgraded part Nos.
: Blank . . Tools already available for other models, usable without any modification
★ Tools marked with ○ in the sketch column are tools introduced in the sketches of the special tools (See Sketches of special tools).

Work item	Symbol		Part No.	Part name	Necessity	Q'ty	New/Remodel	Sketch	Nature of work and remarks
Removal and installation of fuel supply pump assembly	A	1	795-630-5500	Standard puller	■	1			Separation of drive gear
		2	01010-81090	Bolt	■	2			
		3	01643-31032	Washer	■	2			
Removal and installation of cylinder head assembly		4	790-331-1110	Wrench	●	1			Tightening of cylinder head bolt
Disassembly and assembly of damper assembly	F		791-612-1100	Installer	■	1			Press fitting of bearing
			790-101-4200	Puller (294 kN {30 ton})	■	1			
			790-101-1102	Hydraulic pump	■	1			
Removal and installation of engine assembly	Q		799-703-1200	Service tool kit	■	1			Charging air conditioner with refrigerant gas (R134a)
			799-703-1100	Vacuum pump (100 V)	■	1			
			799-703-1111	Vacuum pump (220 V)	■	1			
			799-703-1121	Vacuum pump (240 V)	■	1			
			799-703-1401	Gas leak detector	■	1			

D155AX-6 Bulldozer

Form No. SEN01204-00

© 2006 KOMATSU
All Rights Reserved
Printed in Japan 05-06 (02)

BULLDOZER

D155AX-6

Machine Model	Serial Number
D155AX-6	80001 and up

50 Disassembly and assembly

Engine and cooling system

Engine and cooling system 2
Removal and installation of fuel supply pump assembly 2
Removal and installation of fuel injector assembly 6
Removal and installation of cylinder head assembly 11
Removal and installation of radiator assembly 22
Removal and installation of aftercooler assembly 24
Removal and installation of engine assembly 26
Removal and installation of engine hood assembly 30

Engine and cooling system

Removal and installation of fuel supply pump assembly

Special tools

Sym-bol		Part No.	Part name	Necessity	Q'ty	New/Remodel	Sketch
A	1	795-630-5500	Standard puller	■	1		
	2	01010-81090	Bolt	■	2		
	3	01643-31032	Washer	■	2		

Removal

⚠ **Disconnect the negative terminal (–) of the battery.**

1. Open engine hood left cover (1) and remove side covers, (2) and (3).

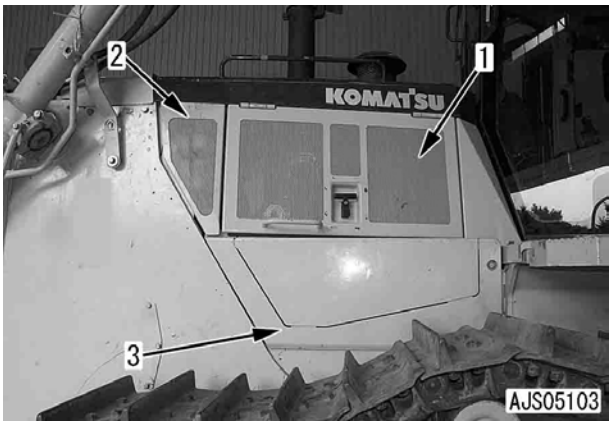

2. Open undercover (4).

⚠ **Open carefully using floor jack, wire rope, etc.**

3. Remove two fuel tube joint bolts, and remove fuel main filter head assembly (5). [*1]

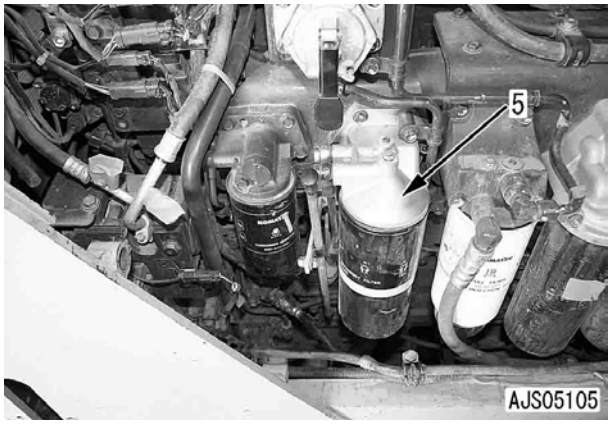

4. Remove tubes (6) and (7) between fuel supply pump and fuel main filter.

5. Remove tube (8) between fuel supply pump and priming pump. [*2]

6. Remove oil level gauge guide (9).

7. Disconnect fuel hose (10), connector PCV 1 (11), PCV2 (12) and G (13).

8. Remove tubes, (14) through (17). [*3]

9. Remove stay (18) and clamp (19).

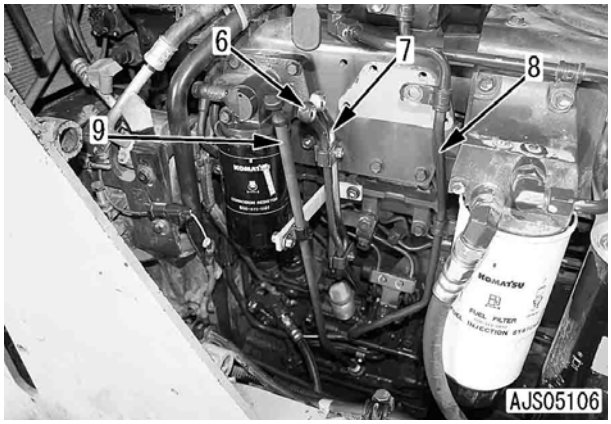

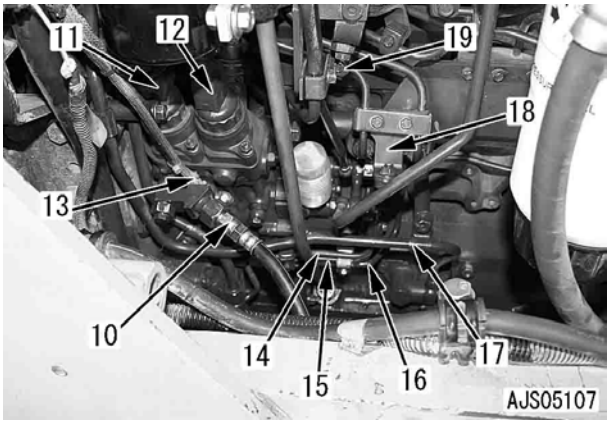

10. Remove stay (20), two covers (21), and two covers (22), and remove high pressure pipes (23) and (24). [*4]
    ★ If the common rail side sleeve nut for high pressure pipe is hard to loose, loosen the mounting bolts for gate type frame (25).

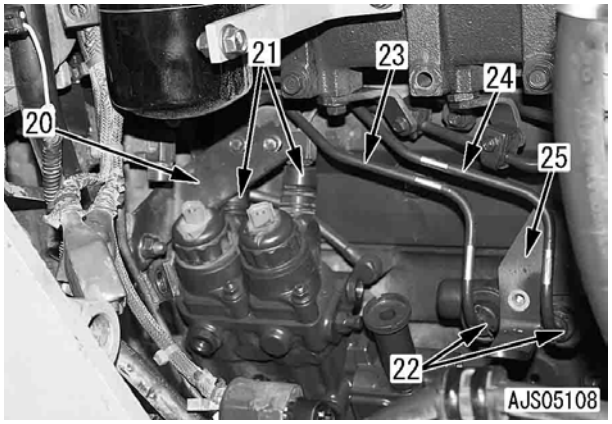

11. Rotate crank shaft forward so that the middle position (a) of "2.5 TOP" stamp line of damper (26) and "3.4 TOP" stamp line aligns to the pointer (27).
    ★ Crank the crankshaft at hexagonal part (b) of water pump drive shaft tip.

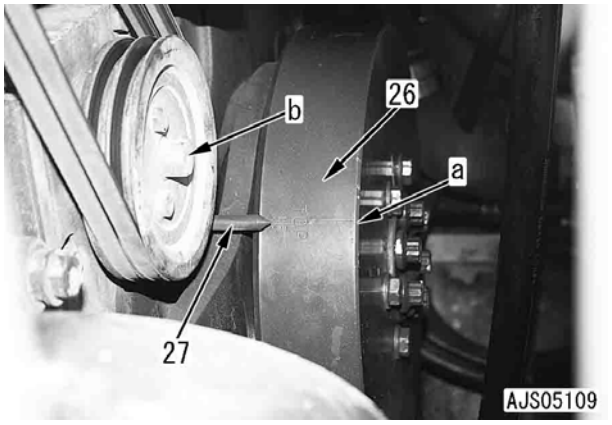

12. Remove engine front cover (28).

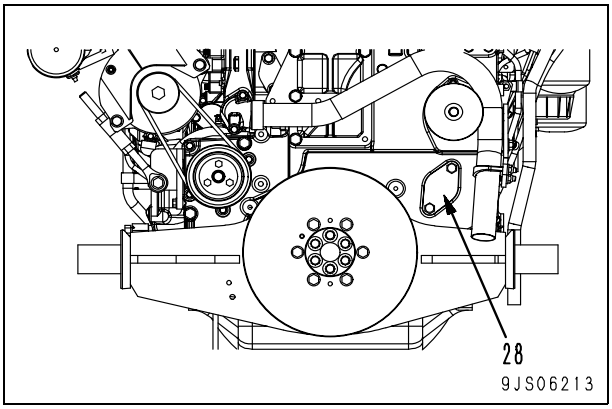

13. Check that the mounting bolt hole (c) at the top of cover align to the forcing tap of drive gear.
    ★ If they are not aligned, rotate crankshaft one more turn.

14. Remove nut (29). [*5]
    ★ Take care not to drop into the case.

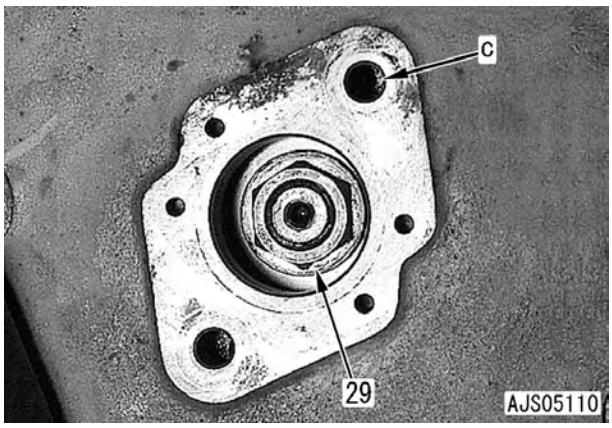

15. Remove bracket (30), and loosen four mounting bolts (31).

16. Set tools **A1**, **A2** and **A3** on drive gear (32), and tighten the center bolt of tool **A1** to remove drive gear (32) from the shaft.

17. Remove mounting bolts (31) and remove fuel supply pump assembly (33).
    ★ Keep tool **A1**, **A2** and **A3** set on drive gear (32) until fuel supply pump assembly is installed, for the drive gear falls off without the tools.

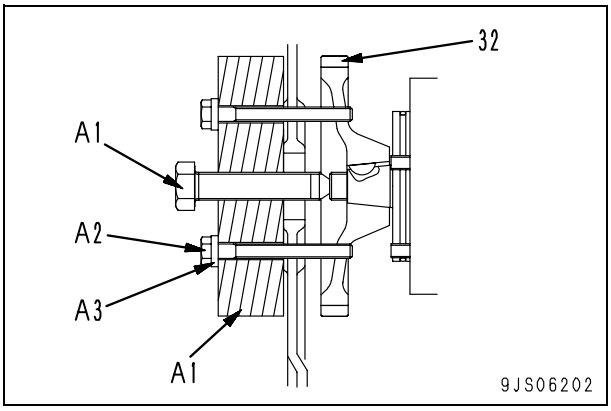

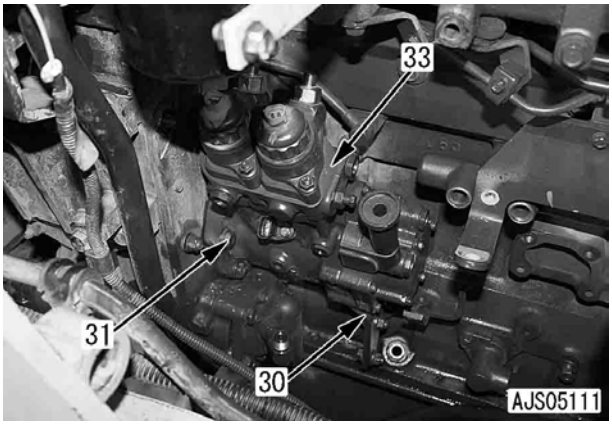

Installation

1. Set fuel supply pump assembly (33).
    ★ Before setting, check that key (d) of shaft aligns to the key slot (e) of drive gear.

2. Temporarily tighten four mounting bolts (31) and bracket (30) with fingers.
    Mounting bolt: **Liquid adhesive (LT-2)**

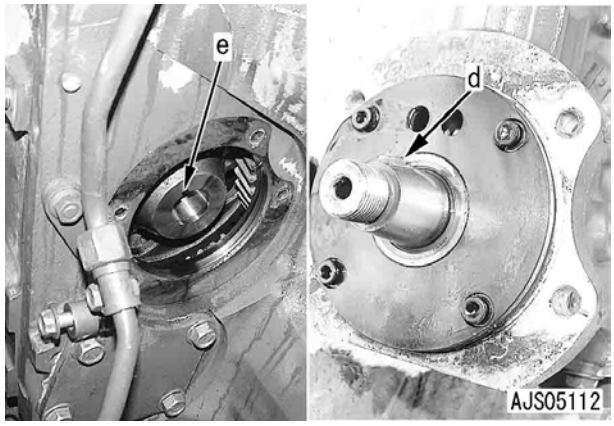

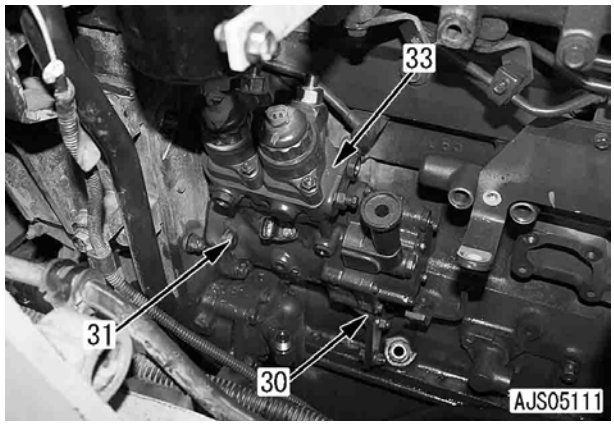

3. Temporarily tighten high pressure pipes (23) and (24) with fingers and tighten permanently with the following torque.
   Common rail side sleeve nut:
   39.2 – 58.8 Nm {4 – 6 kgm}
   Supply pump side sleeve nut:
   39.2 – 49 Nm {4 – 5 kgm}

4. Tighten permanently four mounting bolts (31).

5. Tighten bracket (30) permanently.
   Mounting bolt:
   19.6 – 29.4 Nm {2.0 – 3.0 kgm}

6. Temporarily tighten clamps (34), (19) and (35), and stays (18), (36) and (20), with fingers.

7. Tighten clamps (34), (19) and (35) permanently.
   ★ Tighten clamps in the order of (34), (19) and (35).
   Clamping bolt:
   9.8 ± 1 Nm {1 ± 0.1 kgm}

8. Tighten stays (18), (36) and (20) permanently.
   ★ Tighten stays in the order of (18), (36) and (20).

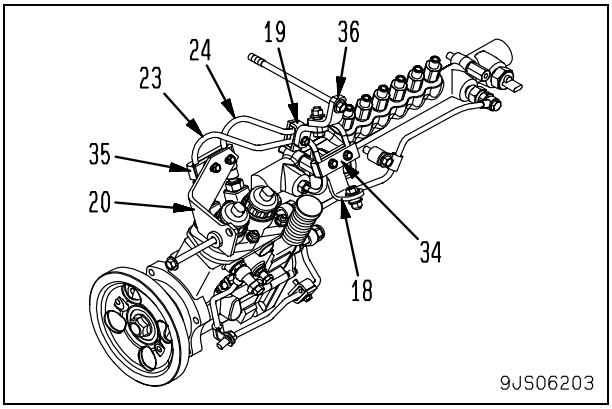

9. Carry out the subsequent procedure in the reverse order of removal.

[*1]
Fuel tube joint bolt:
24.5 – 34.3 Nm {2.5 – 3.5 kgm}

[*2]
Fuel tube sleeve nut:
43 – 47 Nm {4.4 – 4.8 kgm}

[*3]
Tube (16) common rail side joint bolt:
17.7 – 22.6 Nm {1.8 – 2.3 kgm}
Tube (16) supply pump side joint bolt:
14.8 – 19.6 Nm {1.5 – 2.0 kgm}

[*4]
★ Install covers (21) and (22) with the notch in the following direction.
- Cover (21): Cylinder block side
- Cover (22): Underside

[*5]
Nut (29): **176 – 196 Nm {18 – 20 kgm}**

Removal and installation of fuel injector assembly

Removal

★ This section explains the procedure for removing No.1 fuel injector assembly.

1. Remove the engine hood referring to the section "Removal and installation of engine hood assembly".

2. Remove tube (1) filter head side mounting bolt, and remove oil filter head assembly (2).

3. Remove two joint bolts (3), and remove fuel main filter head assembly (3a). [*1]

4. Remove stay (4).

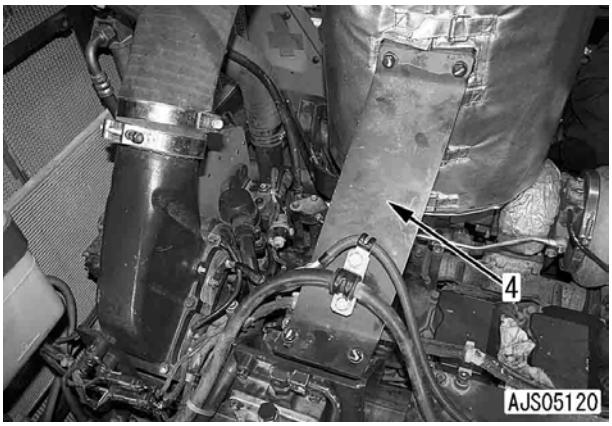

5. Remove tube (5) and block (6).

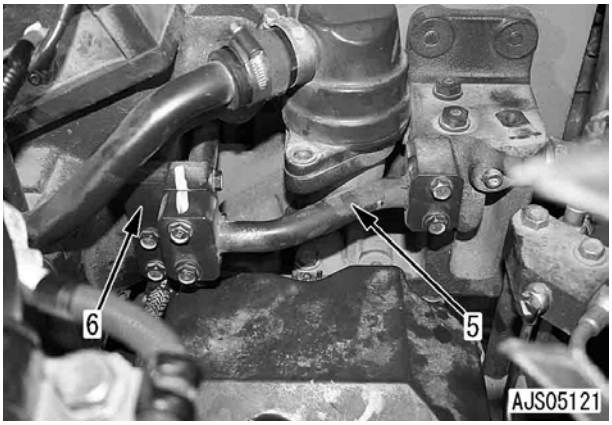

6. Remove clamp (7) and stay (8), and remove gate type frame (9). [*2]

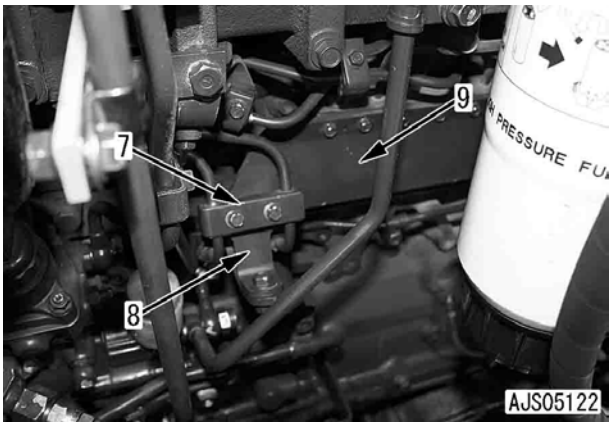

7. Remove clamp (10), and remove cover (11).

8. Loosen sleeve nut (12).

9. Remove stays (13) through (16).

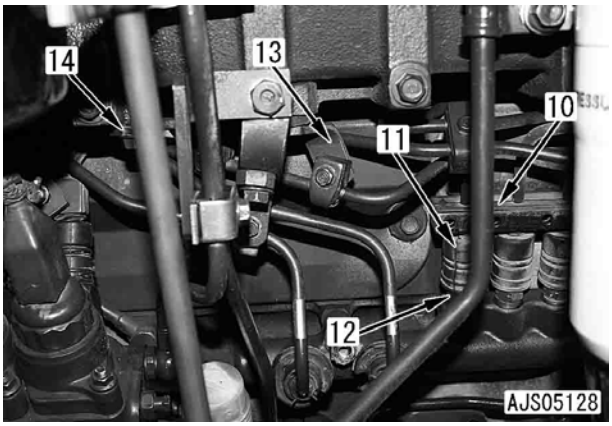

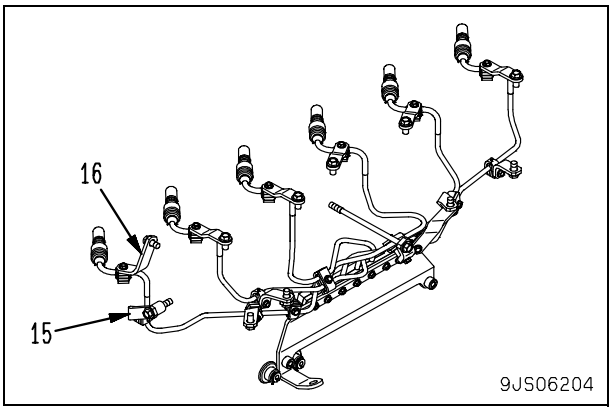

10. Remove cylinder head cover (17). [*3]

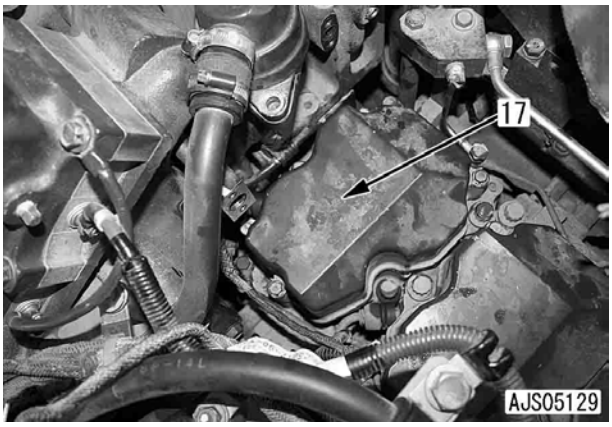

11. Remove cover (18). [*4]

12. Remove mounting bolts (19) through (21), and remove rocker arm and rocker shaft assembly (22). [*5]
    ★ Loosen lock nut (24), and loosen adjustment screw (25) two or three turns to prevent excessive force applied to push rod (23), when installing rocker arm and rocker shaft assembly.

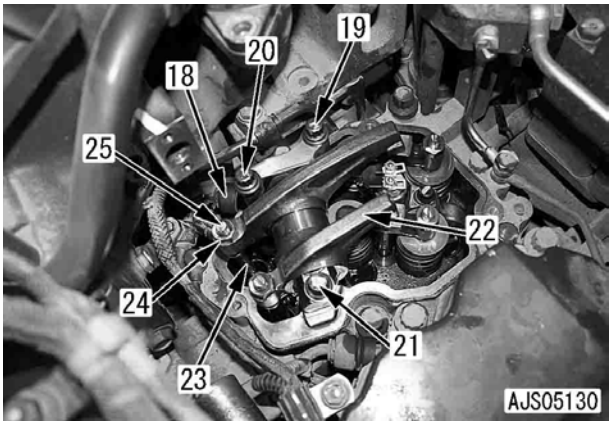

13. Loosen sleeve nut (26), and remove high pressure pipe (27) from injector.

14. Remove wiring harness clamping bolt (28) and clip (29). [*6]

15. Remove two wiring harness capture nuts (30) from fuel injector assembly. [*7]
    ★ Tighten nuts alternately.

16. Remove holder mounting bolt (31).

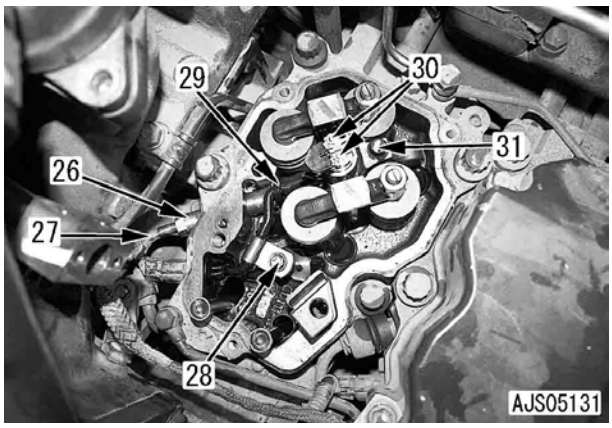

17. Set L type bar [1] under fuel injector assembly inlet connector (a), and remove slowly fuel injector assembly (32) with holder (33) using leverage action.
    ★ Do not pull out solenoid valve portion at the top of injector by pinching with pliers, etc.

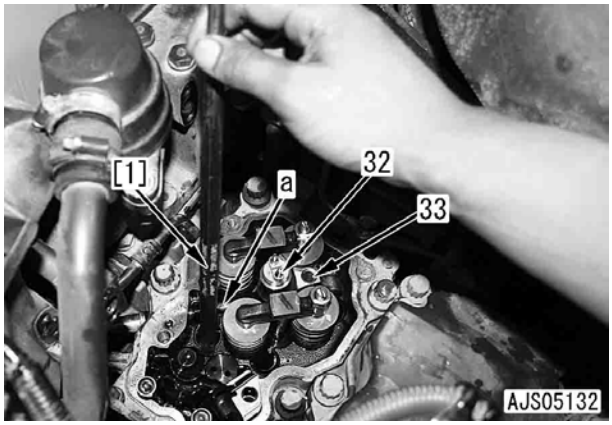

Installation

1. Install fuel injector assembly.
   1) Check that no foreign material stays inside injector sleeve.
   2) Install O-rings (34) and (35), and gasket (36) to injector.
      ★ Take care not to install O-ring to groove (b).

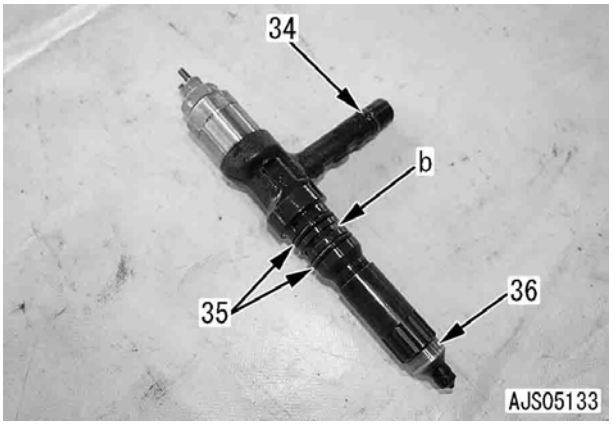

   3) Set fuel injector assembly (32) with holder (33) to cylinder head.
   4) Attach spherical washer (37) to bolt (31), and tighten temporarily bolt (31).
      Spherical washer: **Engine oil**
   5) Tighten temporarily high pressure pipe sleeve nuts (26) and (12).
      ⚠ **Install high pressure pipe after checking the followings. If an abnormality takes place, it may cause fuel leakage, and replace high pressure pipe.**
      - Check visually taper seal portion (a portion: within 2 mm from the tip) at the joint section for visible vertical slit scar (b) or patchy dent (c).
      - Check the difference at (d) portion (tip of taper seal portion: within 2 mm from the tip) for any catches on a finger nail (no fatigue).

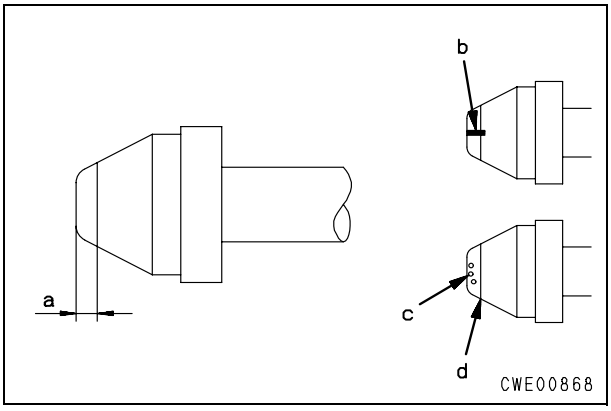

   6) Tighten bolts (31) to the specified torque.
      Bolt (31):
      58.8 – 73.5 Nm {6 – 7.5 kgm}
   7) Tighten sleeve nuts (26) and (12).
      Sleeve nuts (26) and (12):
      39.2 – 49 Nm {4 – 5 kgm}

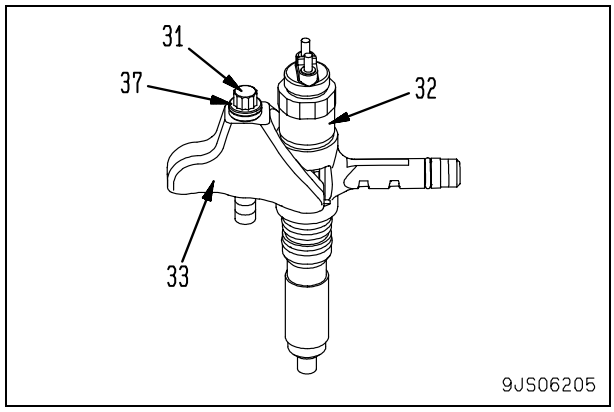

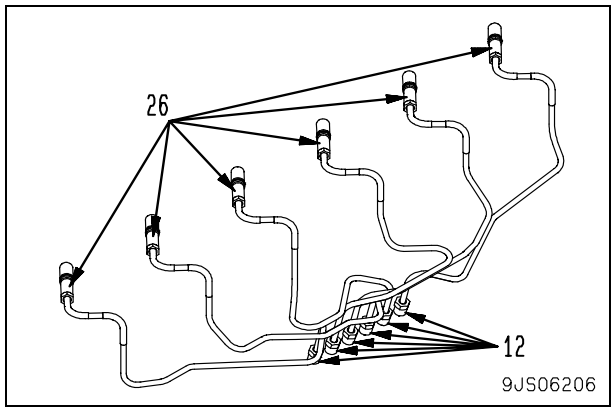

2. Install high pressure pipe clamp and stay.
   1) Temporarily tighten high pressure pipe clamp, stay (16), clamping bolts (38) through (42), and stay mounting bolt, with fingers.
   2) Tighten permanently high pressure pipe clamping bolt.
      Clamping bolt:
      9.8 ± 1 Nm {1 ± 0.1 kgm}
   3) Tighten permanently stay mounting bolt.
   4) Temporarily tighten high pressure pipe clamp, stay (15), clamping bolts (44) through (48), and stay mounting bolt, with fingers.
   5) Install cover (11).
      ★ Install with the notch toward cylinder block side.
   6) Install high pressure pipe clamp (10) and gate type frame (9) temporarily.
   7) Tighten clamping bolt for high pressure pipe clamp (10) permanently.
      Clamping bolt:
      9.8 ± 1 Nm {1 ± 0.1 kgm}
   8) Tighten gate type frame (9) permanently.
   9) Tighten high pressure pipe clamp, stay (15) and clamping bolts (44) through (48), permanently.
      Clamping bolt:
      9.8 ± 1 Nm {1 ± 0.1 kgm}
   10) Tighten permanently stay mounting bolt.

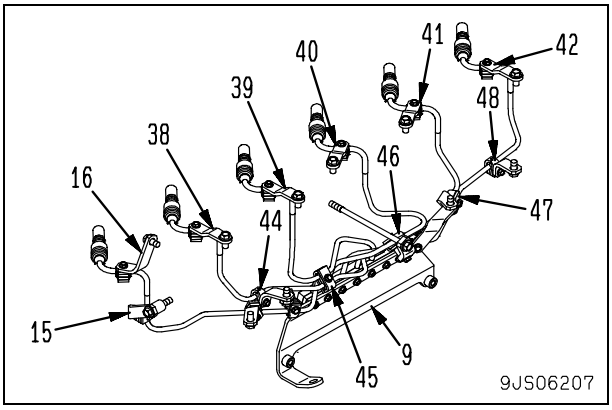

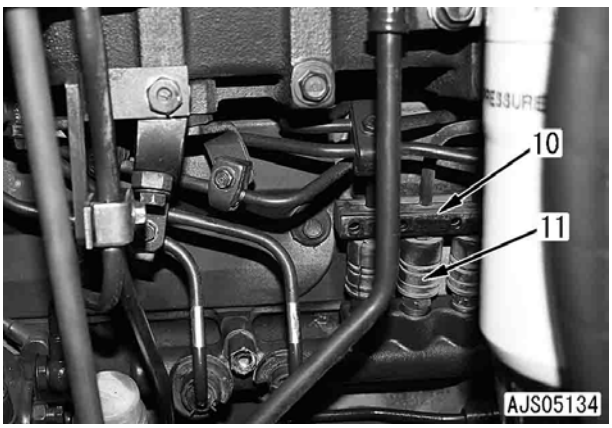

3. Install the subsequent procedure in the reverse order of removal.

[*1]
Joint bolt: **24.5 – 34.3 Nm {2.5 – 3.5 kgm}**

[*2]
Clamping bolt (7): **9.8 ± 1 Nm {1 ± 0.1 kgm}**

[*3]
Cylinder head cover mounting bolt:
29.4 – 34.3 Nm {3.0 – 3.5 kgm}

[*4]
★ Install with the notch downward.

[*5]
★ When installing rocker arm and rocker shaft assembly (22), check the ball portion of adjustment screw (25) to be inserted securely into socket of push rod (23), and tighten mounting bolts.
★ As 3 mounting bolts are different each other, install them referring to the followings.
- Mounting bolt (19): Stem length 120mm
- Mounting bolt (20): Stem length 90 mm
- Mounting bolt (21): Stem length 75.2 mm

Mounting bolts (19), (20) and (21):
93 – 103 Nm {9.5 – 10.5 kgm}
★ Adjust valve clearance referring to the section of Testing and adjusting, "Adjusting valve clearance".

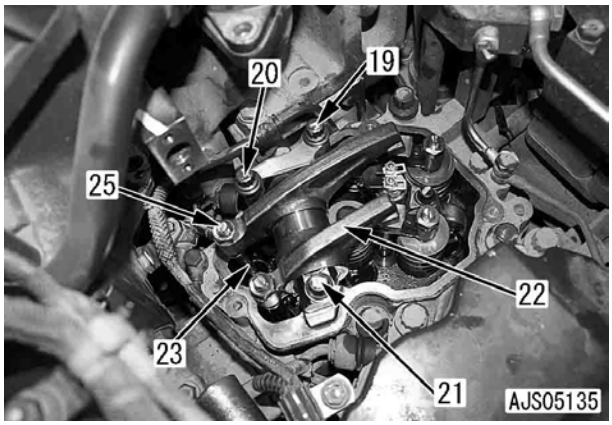

[*6] [*7]

★ Install wiring harness according to the following procedure.

1) Install clip (29).
2) Tighten two capture nuts (30).
   ★ Tighten capture nuts alternately.
   Capture nut:
   2 ± 0.2 Nm {0.2 ± 0.02 kgm}
3) Tighten wiring harness clamping bolt (28).

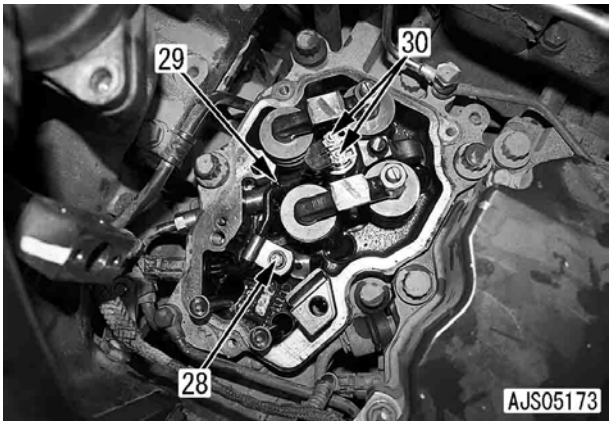

Removal and installation of cylinder head assembly

Special tools

Sym-bol		Part No.	Part name	Necessity	Q'ty	New/Remodel	Sketch
A	4	790-331-1110	Wrench	●	1		

Removal

1. Remove the engine hood referring to the section "Removal and installation of engine hood assembly".

2. Drain the coolant.

   Coolant: **82ℓ**

3. Remove stay (1).

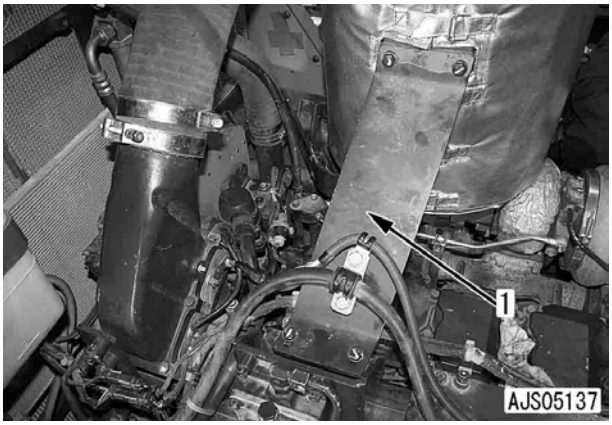

4. Remove filter head side mounting bolt of tube (2), and remove oil filter head assembly (3).

5. Disconnect fuel hose (4).

6. Remove fuel tube (5), and remove fuel pre filter head assembly (6).

7. Remove bracket (7).

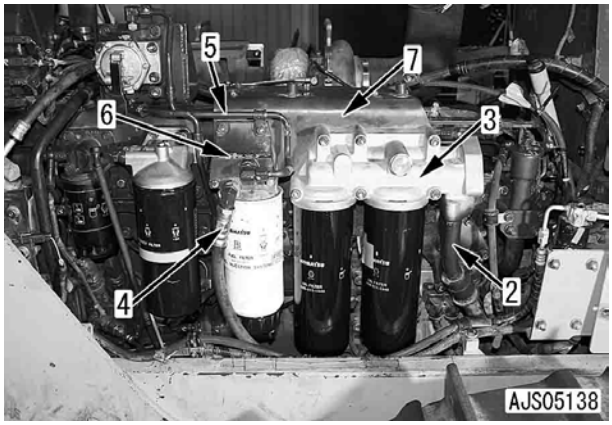

8. Remove two joint bolts (8), and remove fuel main filter head assembly (9). [*1]

9. Remove two joint bolts (10), and remove corrosion resistor head assembly (11). [*2]

10. Remove fuel tube (12), and remove priming pump bracket assembly (13). [*3]

11. Remove bracket (14).

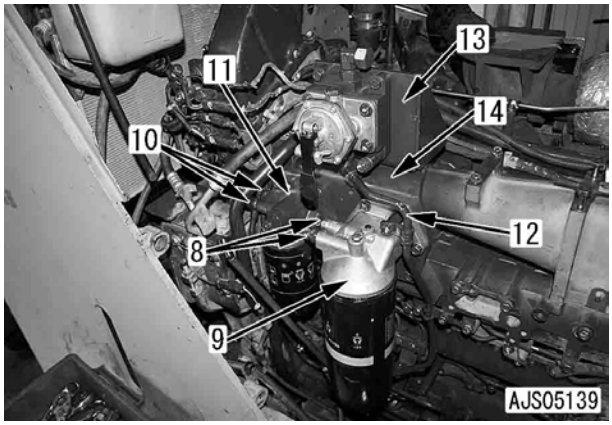

12. Disconnect connecters, BP (15), SBP (16), EGR (17) and SEGR (18).

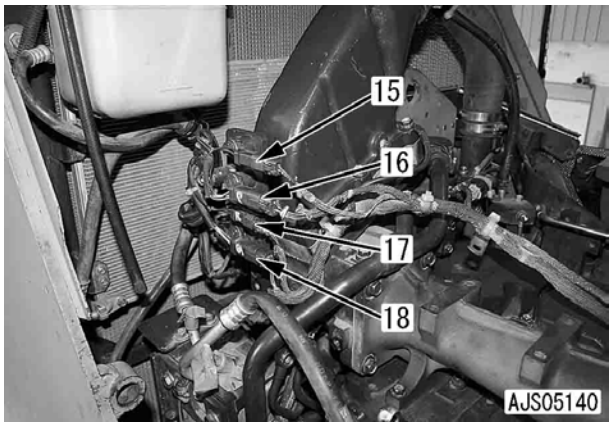

13. Disconnect connector PEVA (19).

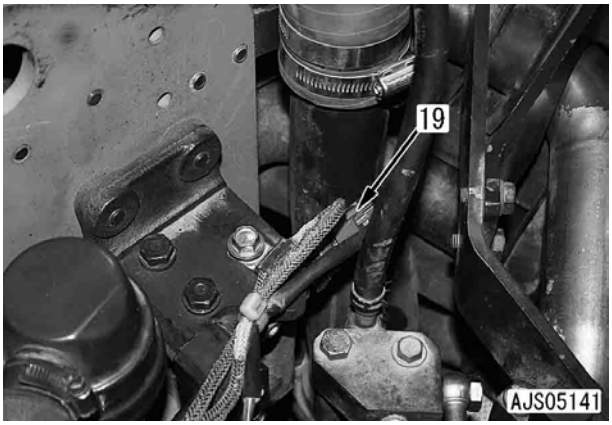

14. Disconnect terminal RHT (20).

15. Remove breather tube (21).

16. Remove wiring harness bracket (22).

17. Remove air intake connector (23). [*4]

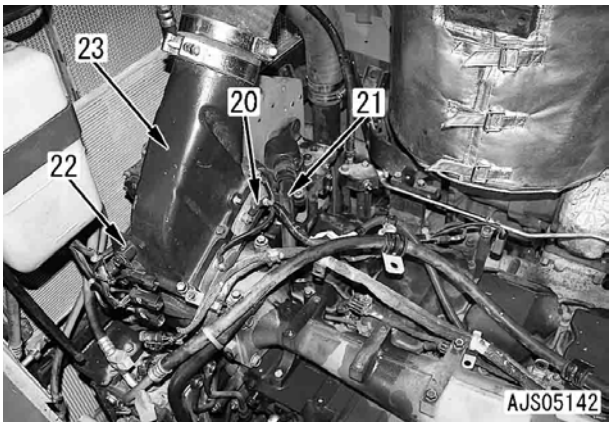

18. Remove air intake connector (24).

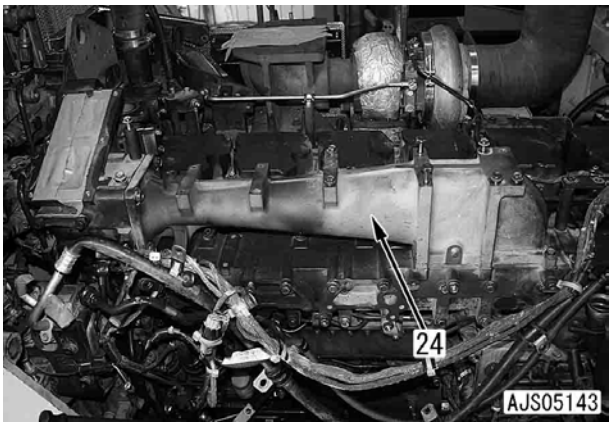

19. Remove air intake housing.
    1) Remove tube (25) and block (26).

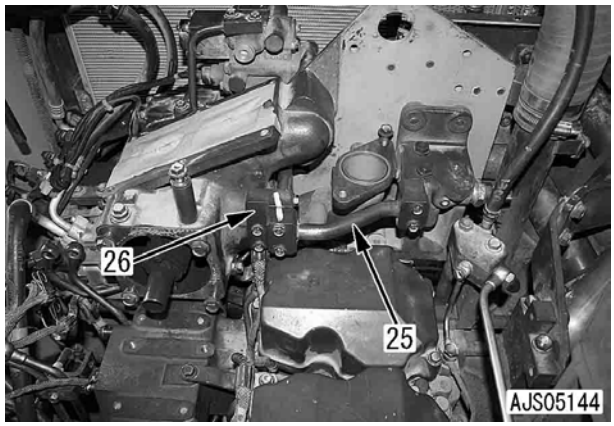

    2) To secure the room for operation, loosen the tension of belt and move air conditioner compressor downward, referring the section of Testing and adjusting, "Testing and adjusting air conditioner compressor belt tension". [*5]
    3) Remove air intake housing (27).

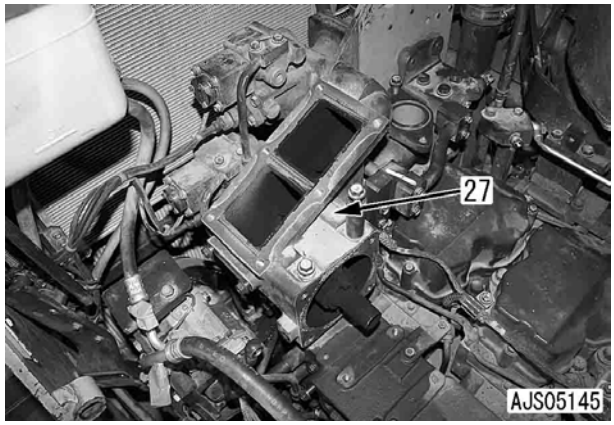

20. Remove oil tube bracket (28) and oil filler tube bracket (29).

21. Disconnect fuel hose (30).

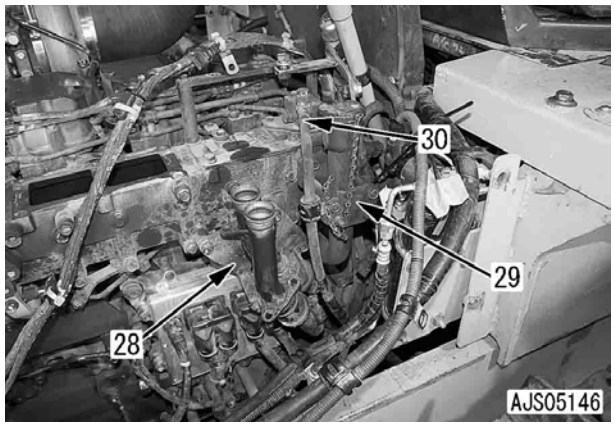

22. Remove clamp (31).

23. Remove mounting bolts of bracket (32), and move bracket (32) with hose (33).

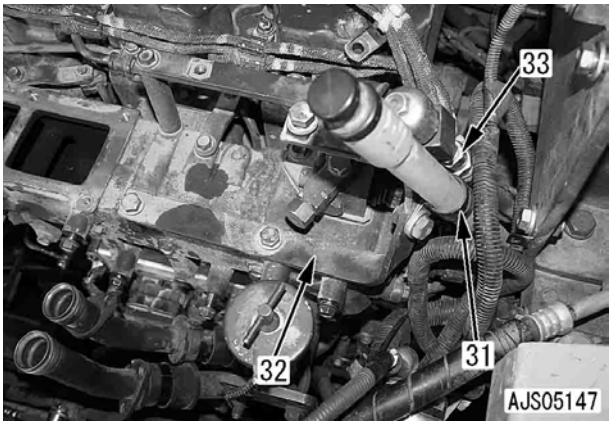

24. Disconnect connectors, TFUEL (34), TIM (35) and PIM (36).

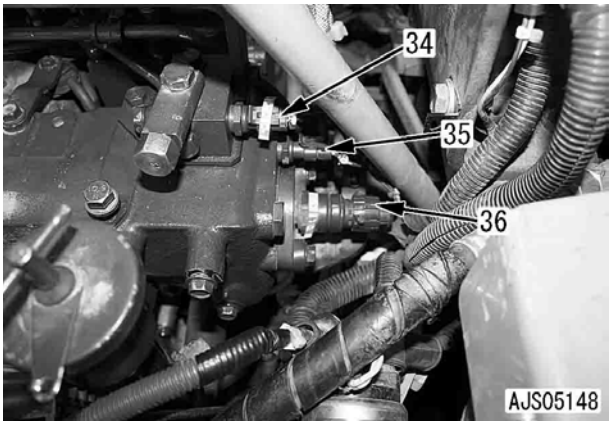

25. Remove spill tube (37). [*6]

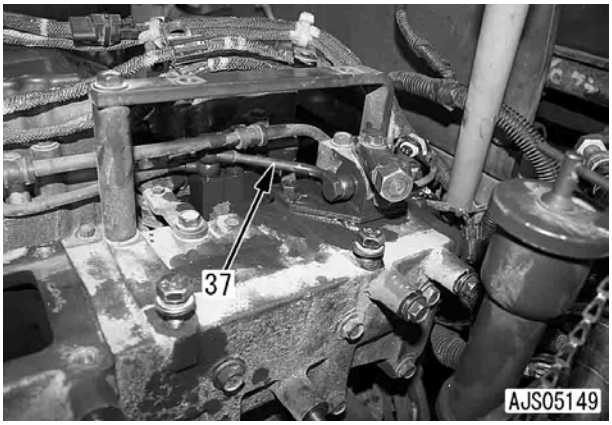

26. Remove two, upper and lower side, wiring harness clamps (38) at the rear side of intake manifold.

27. Remove charge pressure sensor (39) with plate (40) and bracket (41).
    ★ This is to secure the room for operation to loosen turbocharger lubrication tube clamp.

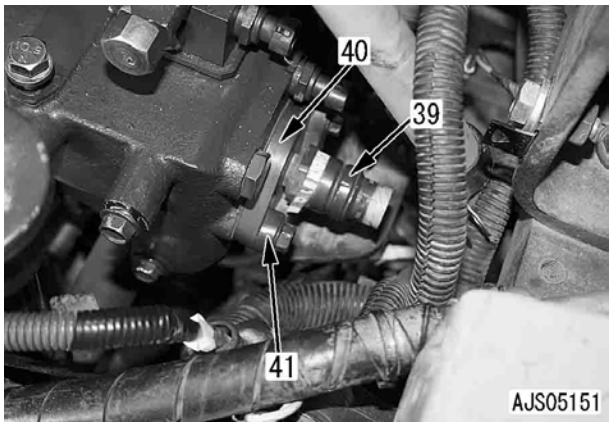

28. Remove five stays (42) for high pressure pipe clamp. [*7]

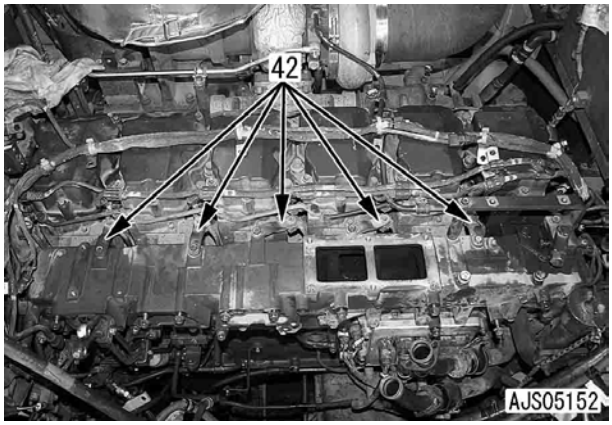

29. Remove stays (43), (44) and (45), for high pressure pipe clamp. [*8]

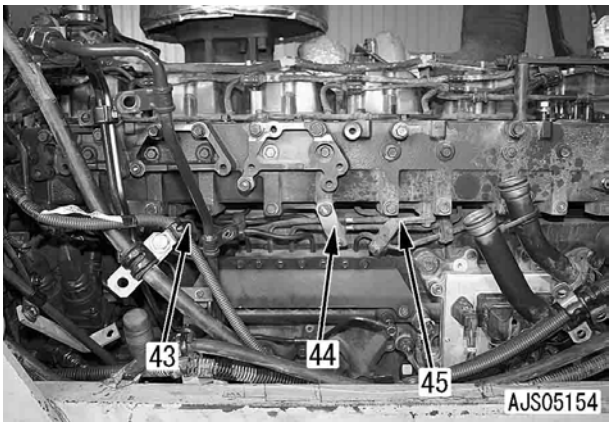

30. Remove water tube (46) in front of intake manifold.

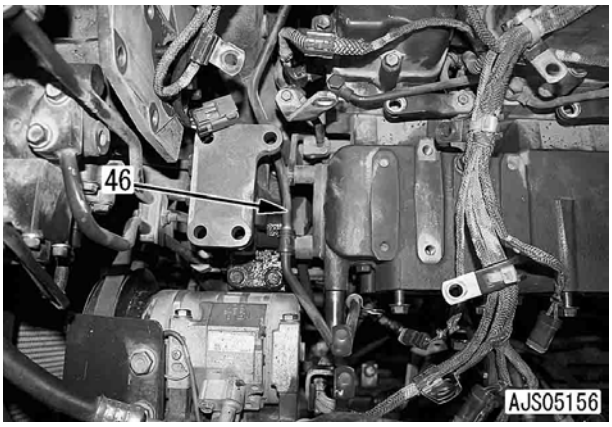

31. Remove intake manifold (47). [*9]

Intake manifold: **50 kg**

32. Remove heat insulation covers, (48), (49) and (50).

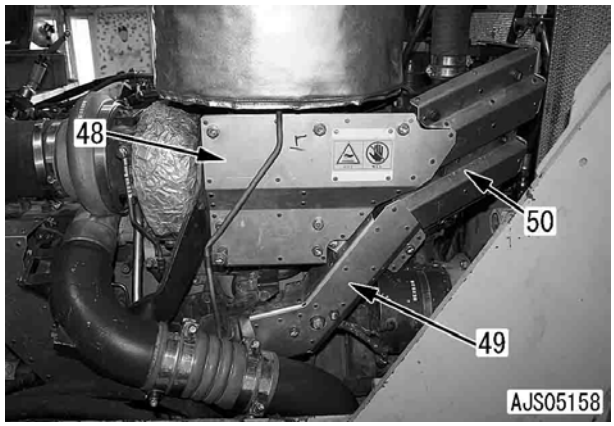

33. Remove muffler (51).

Muffler: **55 kg**

34. Remove tube (52). [*10]

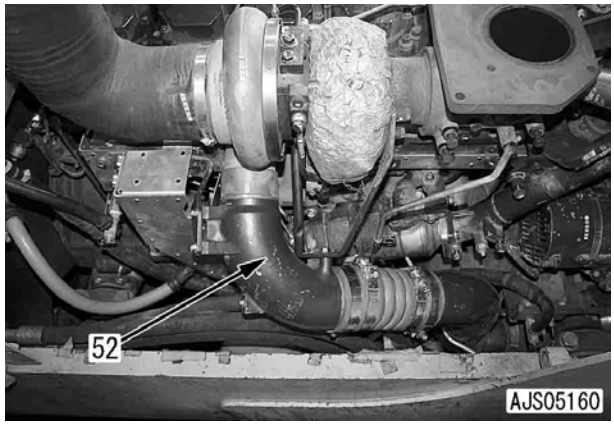

35. Remove heat insulation covers (53) and (54), and bracket (55) and (56).

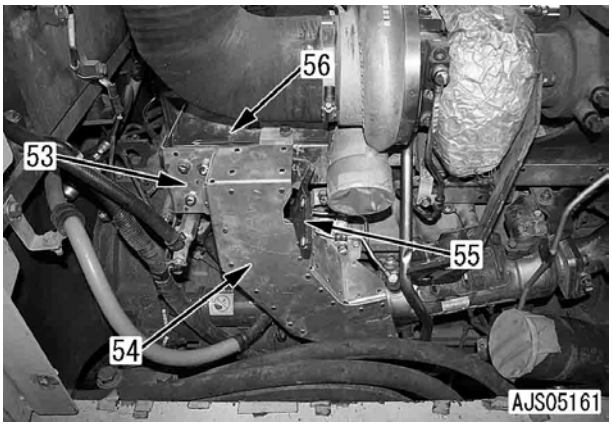

36. Remove EGR tube (57). [*11]

37. Remove water tube (58).

38. Remove turbocharger side mounting bolt for oil tube (59).

39. Remove heat insulation cover (60) and bracket (61).

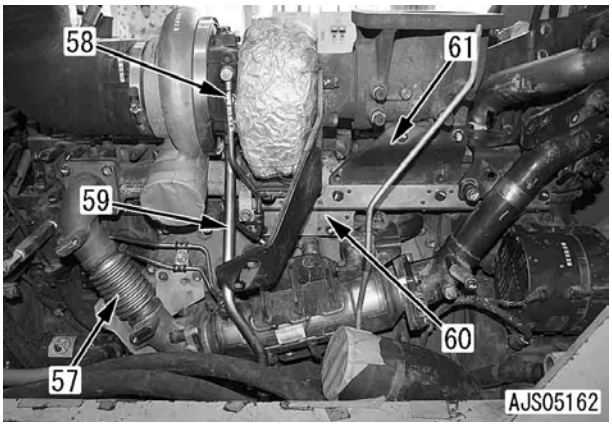

40. Remove heat insulation cover (62).

41. Remove brackets (63) and (64), and remove bypass tube (65). [*12]

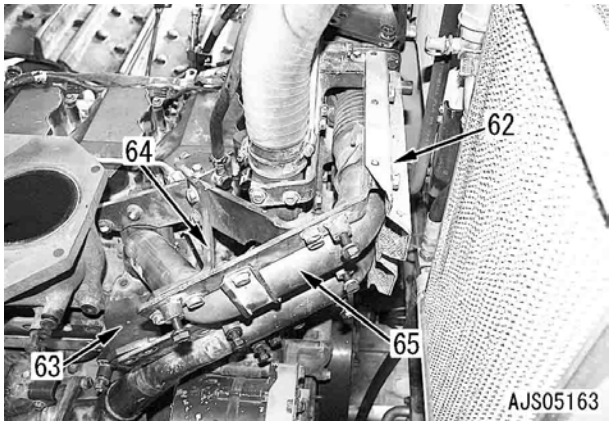

42. Remove oil tube (66) and water tube (67). [*13]

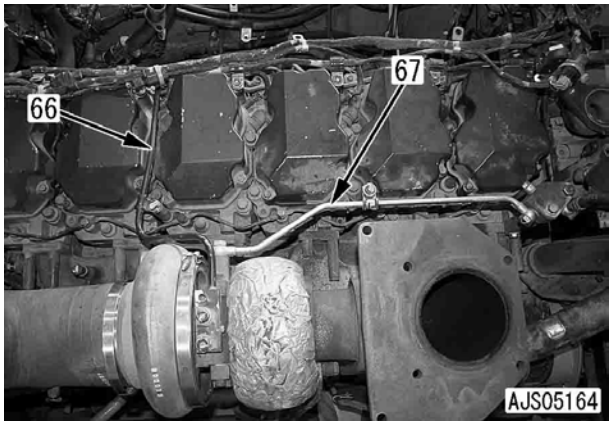

43. Remove turbocharger and exhaust manifold assembly (68). [*14]

    Turbocharger and exhaust manifold assembly: **80 kg**

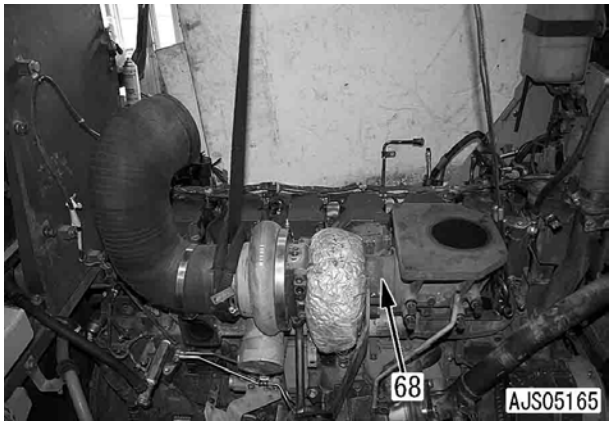

44. Disconnect connectors CN1 (69), CN2 (70), CN3 (71), CN4 (72), CN5 (73) and CN6 (74), and move wiring harnesses (75) and (76).
    ★ To disconnect the connector, push in the (X) direction with a flat-head screwdriver [1] placed at the stepped portion (a) while pressing stopper (b).

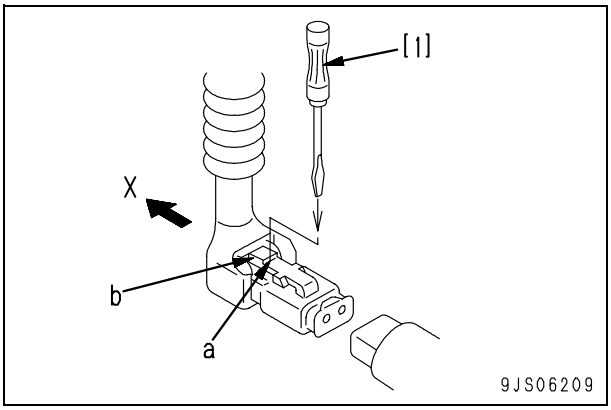

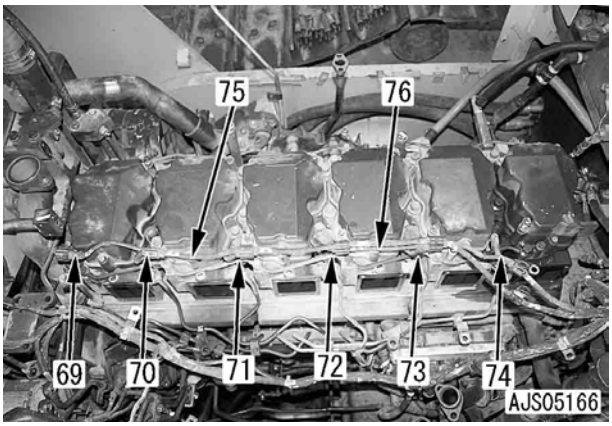

45. Remove gate type frame (77) and clamp (78). [*15]

46. Remove spill tube (79). [*16]

47. Remove cover (80) and high pressure pipe (81) depending on the cylinder head assembly to be removed. [*17] [*18]

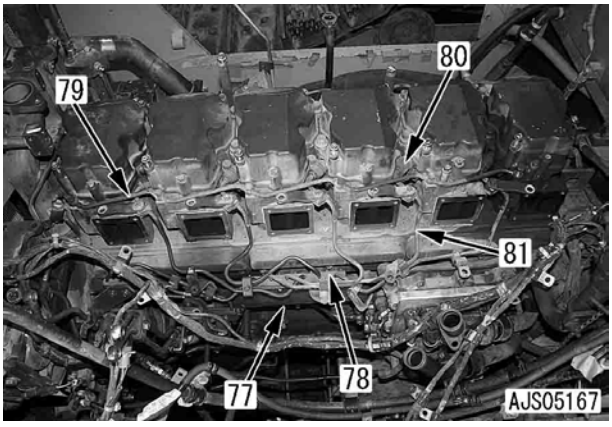

48. Remove water tube (82). [*19]

49. Remove cylinder head cover (83). [*20]

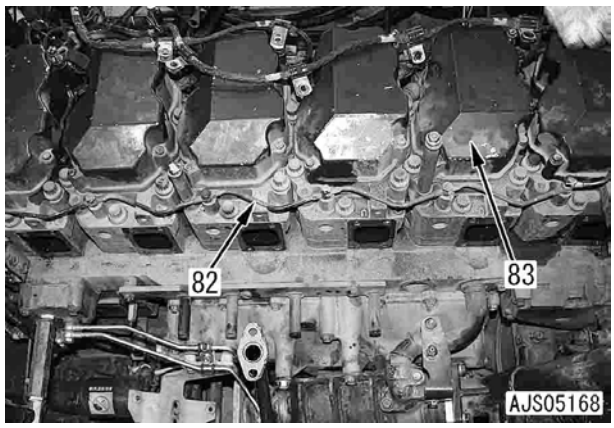

50. Rotate crankshaft forward, align damper "1.6TOP" stamp line (c) to pointer (91), and then set the No.1 cylinder to the compression top dead center.
    ★ Crank the crankshaft at hexagonal part (d) of water pump drive shaft tip.

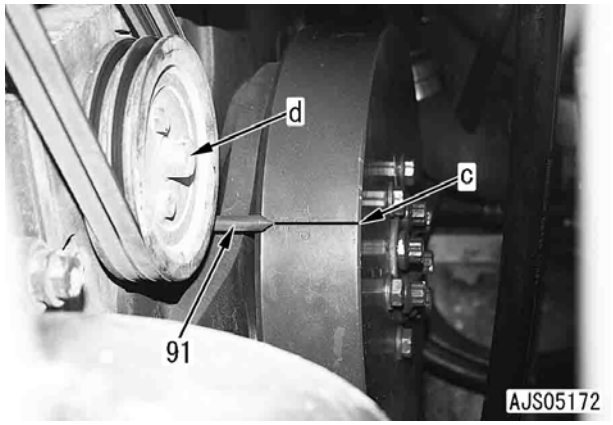

51. Remove three mounting bolts (84) through (86), and remove rocker arm and rocker shaft assembly (87).
    ★ Loosen lock nut (89), and loosen adjustment screw (90) two or three turns to prevent excessive force applied to push rod (88), when installing rocker arm and rocker shaft assembly. [*21]

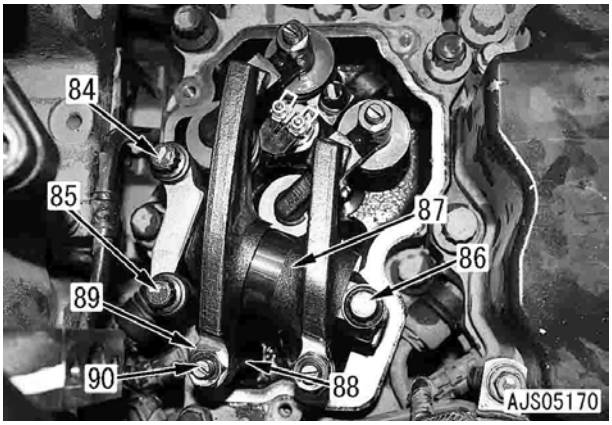

52. Remove fuel injector assembly.
    1) Remove wiring harness clamping bolt (92) and clip (93). [*22]
    2) Remove two wiring harness capture nuts (94) from fuel injector assembly. [*23]
       ★ Loosen nuts alternately.
    3) Unscrew bolt (95) to remove holder (96).
    4) Push connecter (97) into rocker housing, and remove injector wiring harness (98). [*24]
       ★ O-ring is installed in connector (97).

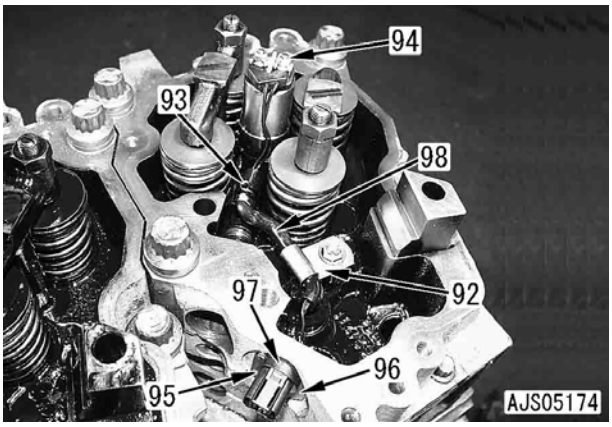

    5) Remove mounting bolt (100) of holder (99). [*25]

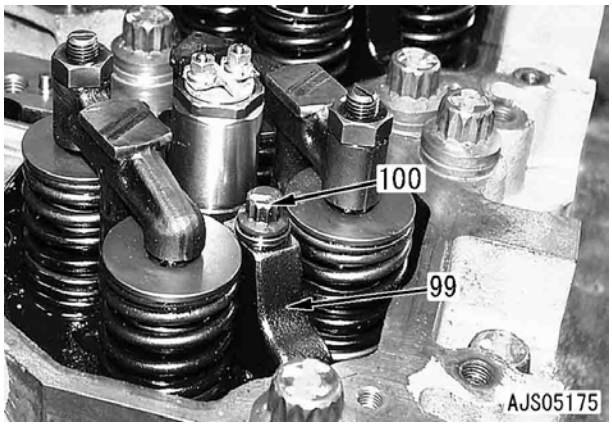

    6) Set L type bar [1] under fuel injector assembly inlet connector (e), and remove slowly fuel injector assembly (101) with holder using leverage action. [*26]
       ★ Do not grip the solenoid valve at the top of the injector to pull off the injector.

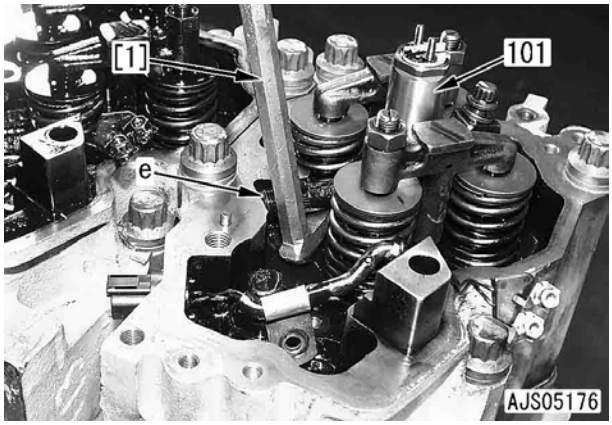

53. Remove two push rods (102).

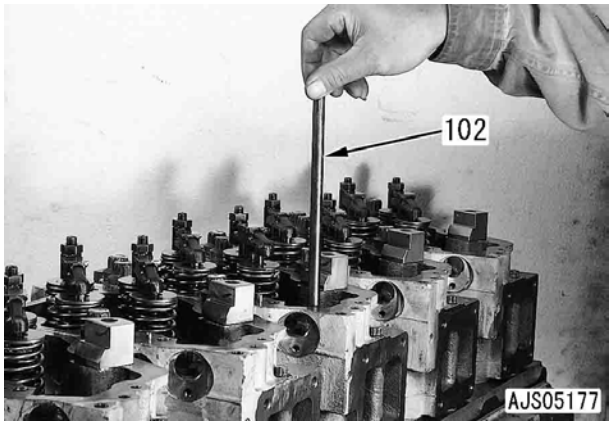

54. Remove crosshead (103).

55. Remove three mounting bolts (104), three bolts (105) and auxiliary bolt (106), and remove cylinder head assembly (107).

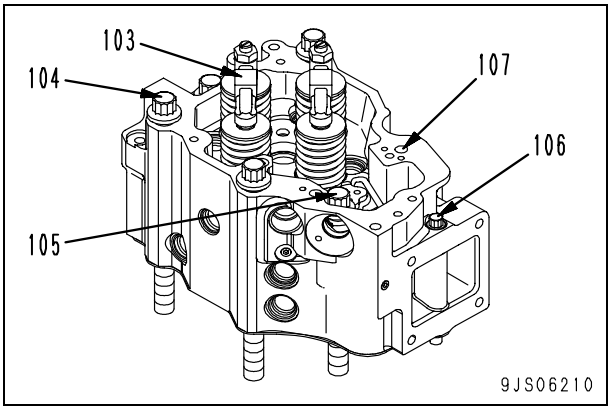

Installation

1. Install cylinder head assembly.
   1) Install cylinder head gasket (115).
      ★ Check that the mounting surface of cylinder head and the inside of cylinders are free from foreign material.
      ★ Check that the gasket is free from peeling or coming off of grommet.

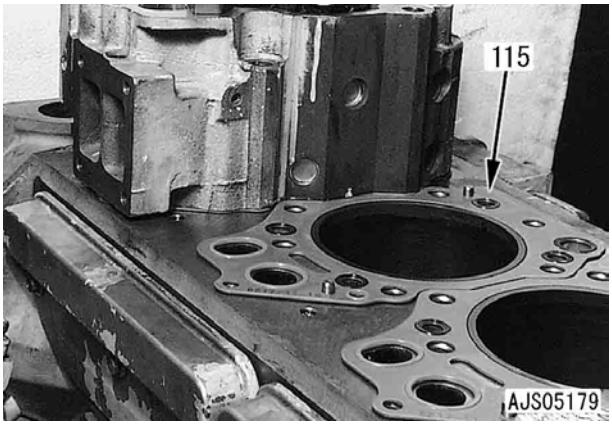

   2) Check cylinder head mounting bolts for the following items, and if out of standard, replace mounting bolt without reusing it.
      - Bolt tightening should be 5 times or less.
        (The number of punch mark at the head of bolt should be 5 or less.)
      - Bolt under head length service limit (a)
        Short bolt: **Less than 170.8 mm**
        Long bolt: **Less than 205.8mm**

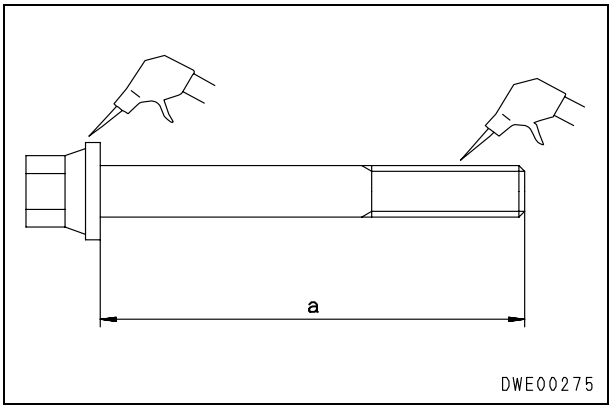

3) Install cylinder head assembly.
4) Tighten mounting bolts in order of 1 through 6 as shown in the figure.
   - Mounting bolt: **Lubricant with molybdenum disulfide (LM-P)**
   - Mounting bolt
     1st time: **137 – 157 Nm {14 – 16 kgm}**
     2nd time: **284 – 294 Nm {29.0 – 30.0 kgm}**
     3rd time: Retighten 90° (+30°/0) with tool **A4**.
   - ★ When tool **A4** is not available, put marks (a) and (b) to bolt and cylinder head, and retighten bolt 90° (+30°/0).
5) Tighten auxiliary bolt (tightening order: 7th) with the following torque.
   - Auxiliary bolt: **66.6 ± 7.4 Nm {6.8 ± 0.8 kgm}**

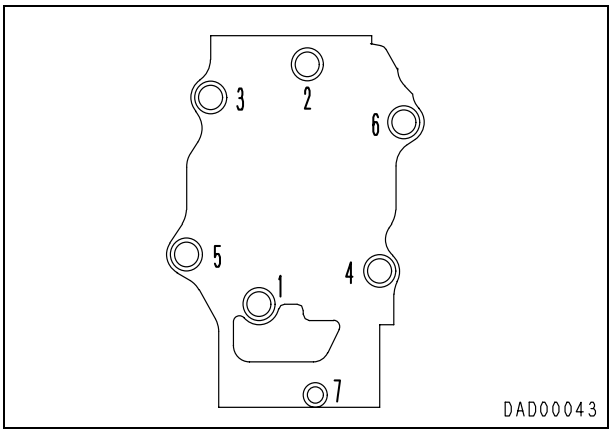

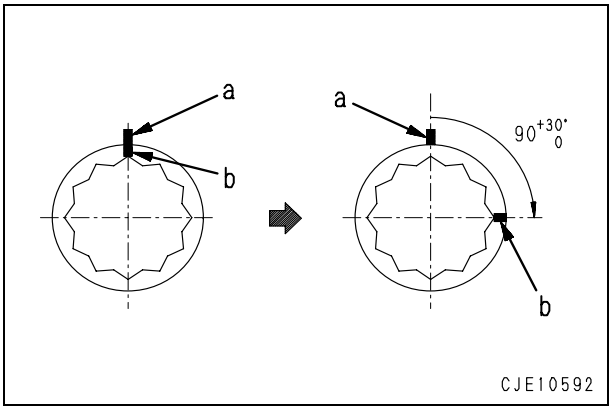

2. After installing cross head (103), make adjustment as follows.
   1) Loosen lock nut (111), and loosen adjustment screw (112).
   2) Lightly push cross head (103) contact surface (h) with rocker arm, and hold cross head to contact with push rod (102) side valve stem (113).
   3) Screw slowly adjustment screw (112), and check the position where adjustment screw touches valve stem (114).
   4) From the above condition, screw adjustment screw (112) 20°.
   5) While holding adjustment screw (112) with a flat-head screwdriver, tighten locknut (111).
      - Locknut: **58.7 ± 5.9 Nm {6.0 ± 0.6 kgm}**

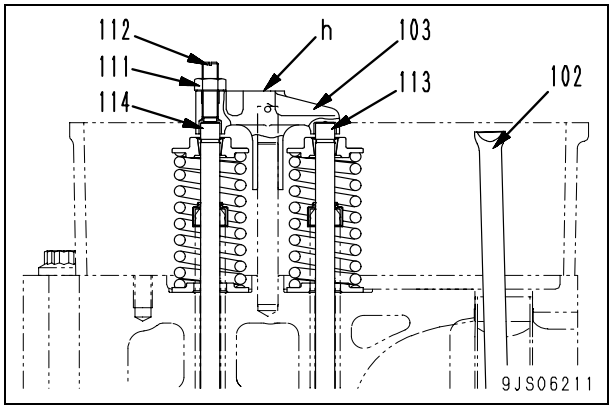

3. Install push rod (102).
   - ★ Raise push rod slightly, and check that push rod is securely inserted in cam follower.

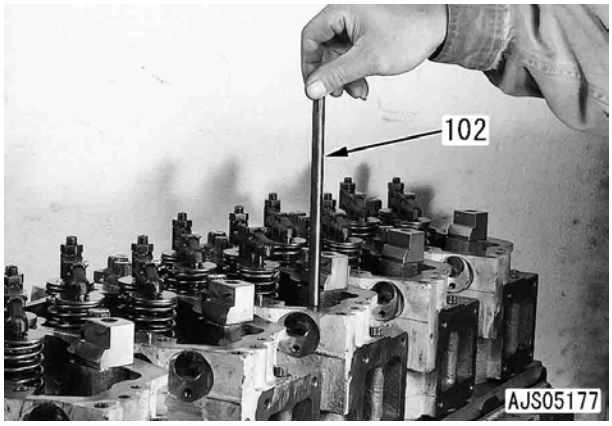

4. carry out the rest of installation in the reverse order of removal.

[*1] [*2]
Joint bolt: **24.5 – 34.3 Nm {2.5 – 3.5 kgm}**
[*3]
Fuel tube sleeve nut:
43 – 47 Nm {4.4 – 4.8 kgm}
[*4] [*10]
★ When loosened hose clamp, replace clamp with new one.
★ Tighten the hose clamp according to the following procedure.
1) Locate the punch mark (f) of bridge (108) as shown in the figure, and adjust the position of bridge to be under band (109).
2) Tighten bolt (110) so that the dimension (g) is between 8 and 10 mm.
Threaded portion of bolts:
PANDO 18B from Three Bond
3) Tighten bolt (110) with the following torque.
Bolt: **25 ± 5 Nm {2.55 ± 0.5 kgm}**

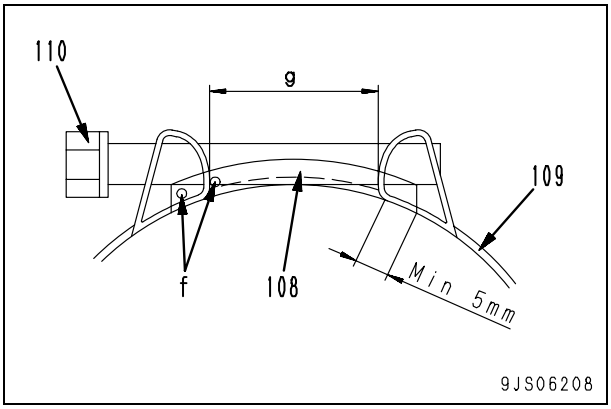

[*5]
★ Adjust the tension of air compressor belt, referring Testing and adjusting section "Testing and adjusting of air conditioner compressor belt tension".

[*6]
Joint bolt (37a):
9.8 – 12.7 Nm {1.0 – 1.3 kgm}
Joint bolt (37b):
19.6 – 29.4 Nm {2.0 – 3.0 kgm}

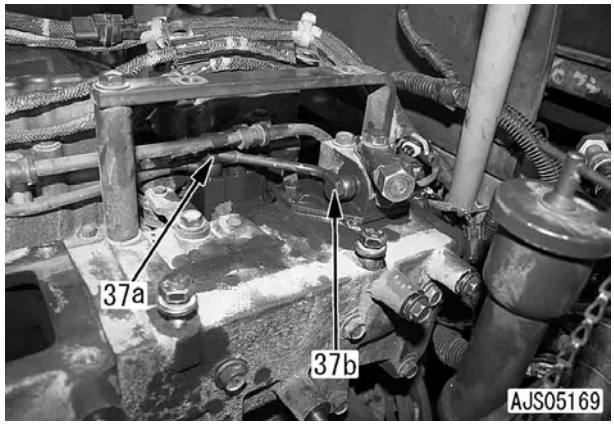

[*7] [*8] [*15] [*18]
★ Install high pressure pipe, clamp, stay and gate type frame referring to the section, "Removal and installation of fuel injector assembly".
[*9]
★ Tighten intake manifold mounting bolts in the numerical order shown below.
Mounting bolt: **58.8 – 73.5 Nm {6 – 7.5 kgm}**

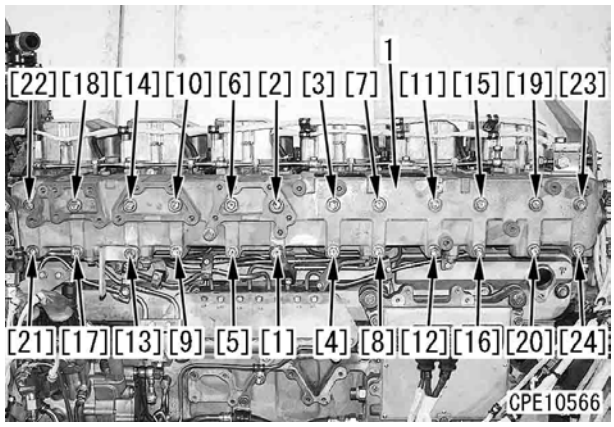

[*11]
EGR tube mounting bolt threaded portion:
Lubricant with molybdenum disulfide (LM-P)
EGR tube mounting bolt, EGR tube and bracket mounting bolt:
44.1 – 53.9 Nm {4.5 – 5.5 kgm}

[*12]
Threads and seat surface of bypass tube mounting bolt: **Lubricant with molybdenum disulfide (LM-P)**
Bypass tube mounting bolt:
44.1 – 53.9 Nm {4.5 – 5.5 kgm}

[*13]
Oil tube cylinder block side joint bolt:
24.5 – 34.3 Nm {2.5 – 3.5 kgm}

[*14]
★ Tighten exhaust manifold mounting bolts in the numerical order shown below.
Threads of mounting bolt:
Lubricant with molybdenum disulfide (LM-P)
Mounting bolt: **58.8 – 73.5 Nm {6 – 7.5 kgm}**

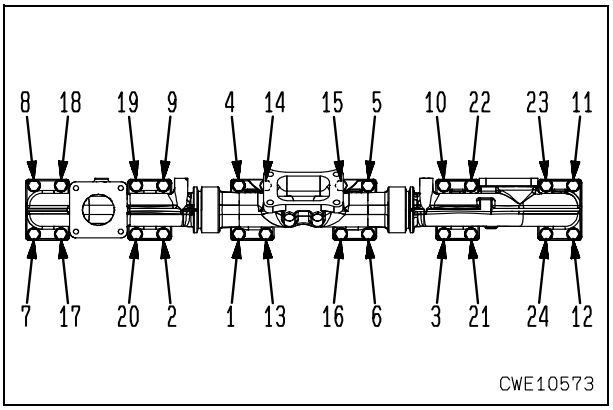

[*16]
Spill tube joint bolt:
9.8 – 12.7 Nm {1.0 – 1.3 kgm}

[*17]
★ Install cover with the notch downward.

[*19]
Water tube joint bolt:
9.8 – 12.7 Nm {1.0 – 1.3 kgm}

[*20]
Cylinder head cover mounting bolt:
29.4 – 34.3 Nm {3.0 – 3.5 kgm}

[*21]
★ When installing rocker arm and rocker shaft assembly (87), check the ball portion of adjustment screw (90) to be inserted securely into socket of push rod (88), and tighten mounting bolts.
★ As three mounting bolts are different each other, install them referring the followings.
- Mounting bolt (84): Stem length 120mm
- Mounting bolt (85): Stem length 90mm
- Mounting bolt (86): Stem length 75.2 mm

Mounting bolt:
93 – 103 Nm {9.5 – 10.5 kgm}

★ Adjust valve clearance referring to the section of Testing and adjusting, "Adjusting valve clearance".

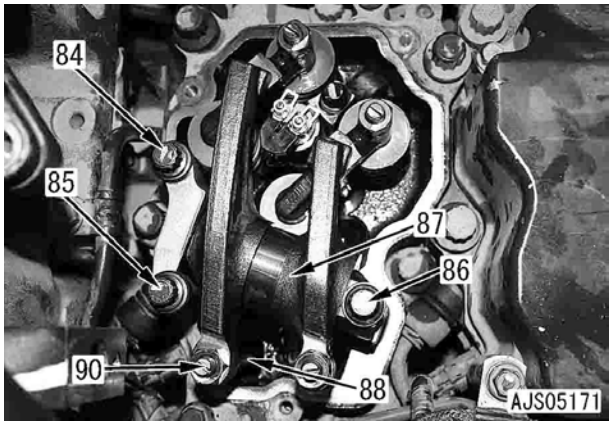

[*22] [*23] [*24]
★ Install injector wiring harness according to the following procedure.
1) Install O-ring to injector wiring harness (98).
2) Install injector wiring harness (98) in rocker housing, install holder (96) and tighten bolt (95).
3) Install clip (93).
4) Tighten two capture nuts (94).
★ Tighten capture nuts alternately.
Capture nut: **2 ± 0.2 Nm {0.2 ± 0.02 kgm}**
5) Install wiring harness clamping bolt (92).

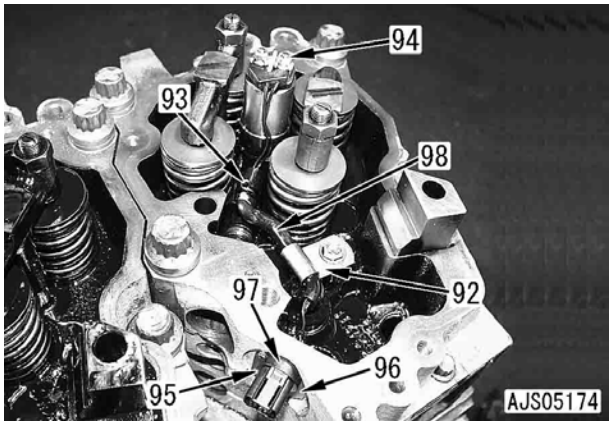

[*25] [*26]
★ Install the fuel injector assembly referring to the section, "Removal and installation of fuel injector assembly".

Removal and installation of radiator assembly

Removal

⚠ Disconnect the negative terminal (–) of the battery.

1. Drain the coolant.
   Coolant: **82ℓ**

2. Remove cover at the top of radiator, and disconnect connector LHD (1).

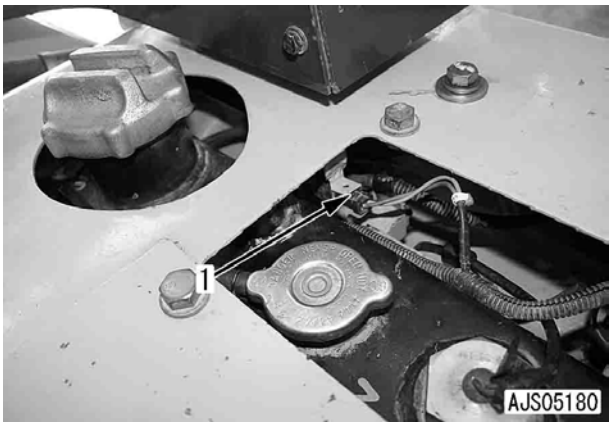

3. Remove cover (2).
   Cover: **50 kg**

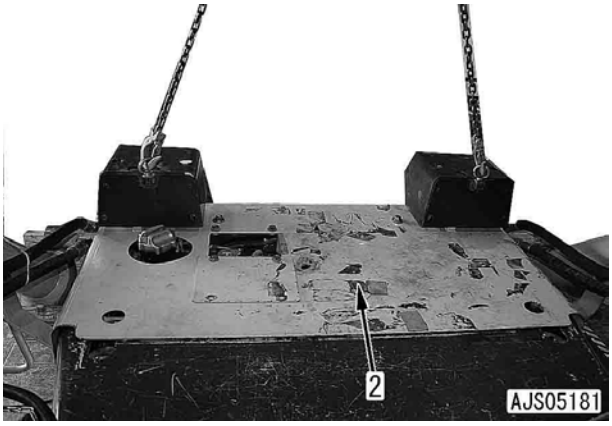

4. Disconnect hoses (3) through (7). [*1]
   ★ Remove mounting bolts for hoses (5) through (7), and disconnect hoses with tubes.

5. Remove bracket (8) through (11).
   ★ Remove bracket (8) when removing left radiator assembly.

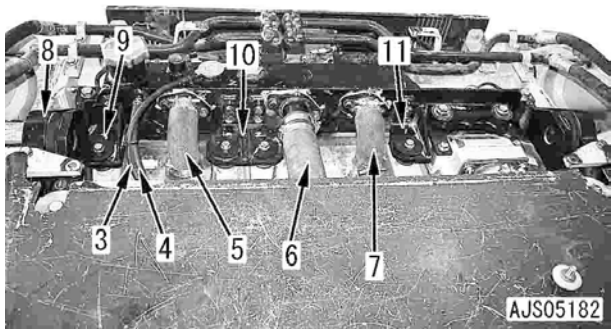

6. Sling radiator assembly (12) and remove it. [*2]
   Radiator assembly: **25 kg**

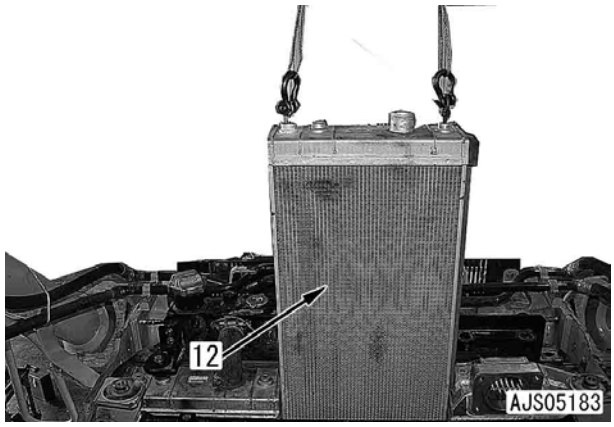

Installation

- Carry out installation in the reverse order of removal.

[*1]
★ Install hoses (5) and (7) with the red circle paint upward.
Tube flange: **gasket sealant**
Hose clamp: **8.8 ± 0.5 Nm {90 ± 5 kgcm}**
★ Tighten two parallel clamps for hose (6) with its bolt location rotated 180° each other.
Tube flange: **gasket sealant**
Hose clamp: **8.8 ± 0.5 Nm {90 ± 5 kgcm}**

[*2]
★ Set radiator assembly according to the following procedure.
1) Set rubber (13) with its stepped portion (a) downward.
★ Apply appropriate amount of grease to prevent drop down when lifted up.
2) Install O-ring (14).
O-ring periphery: **Grease (G2-LI)**

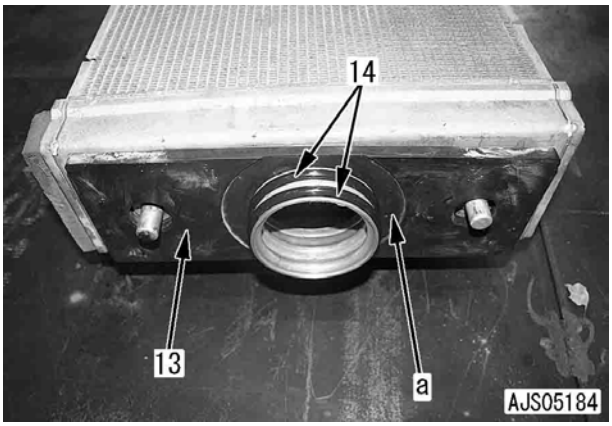

3) Open radiator grill, remove fan net and install four cushions (15) to lower tank (16).

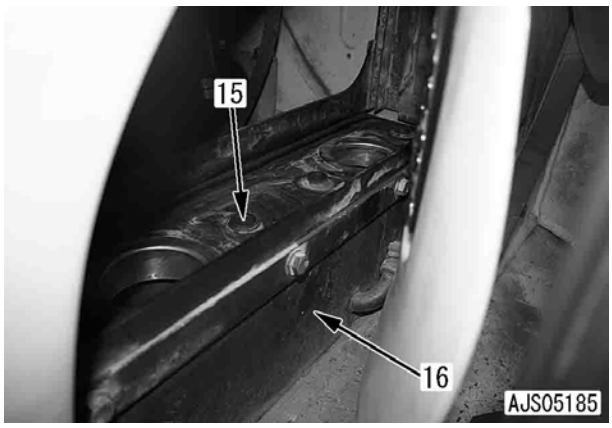

4) Sling the radiator assembly and set it on the lower tank slowly.
★ Check visually the installation condition from the machine front.

Removal and installation of aftercooler assembly

Removal

⚠ Disconnect the negative terminal (–) of the battery.

1. Remove cover at the top of radiator, and disconnect connector LHD (1).

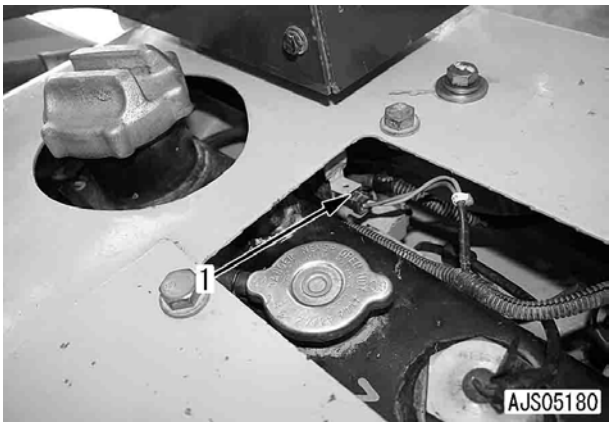

2. Remove cover (2).
   Cover: **50 kg**

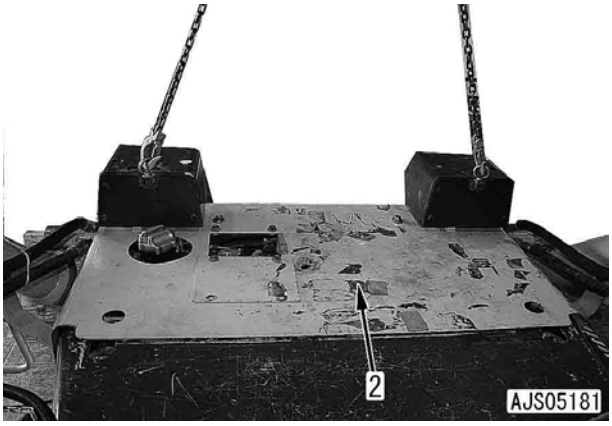

3. Disconnect the tube (3) from the lower part of the after cooler. [*1]

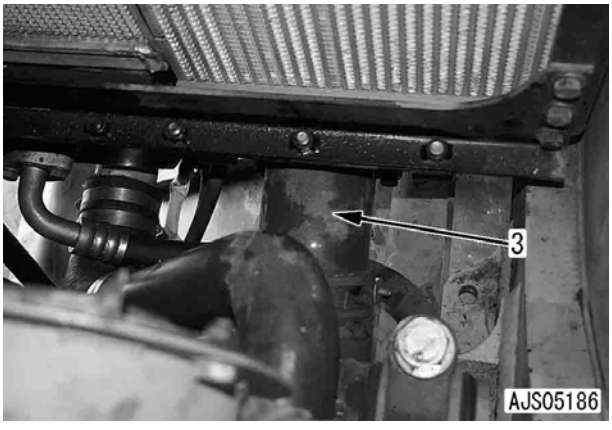

4. Remove four mounting bolts for tube (4). [*2]

5. Remove brackets, (5), (6) and (7).

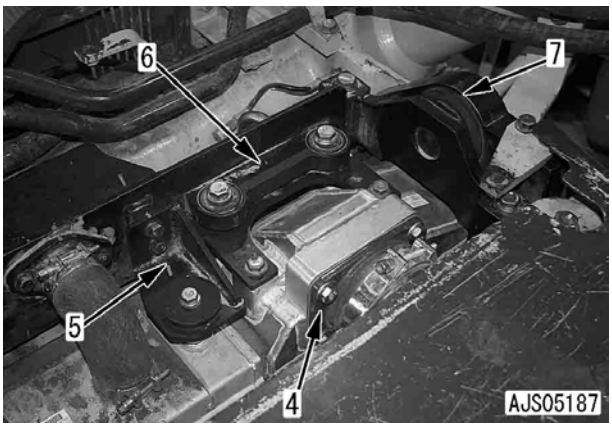

6. Sling aftercooler assembly (8) and remove it.
   Aftercooler assembly: **35 kg**

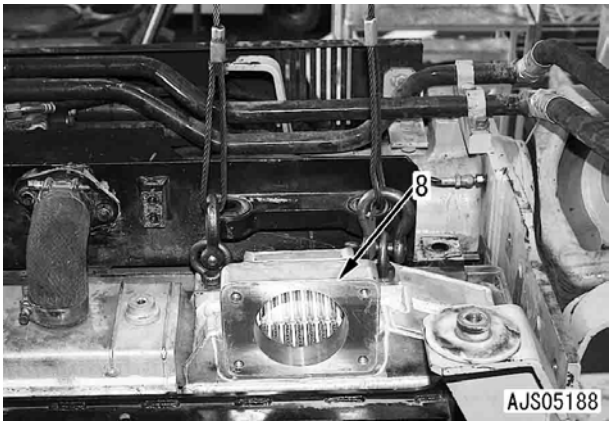

Installation

- Carry out installation in the reverse order of removal.

[*1] [*2]
★ When loosened hose clamp, replace clamp with new one.
★ Tighten the hose clamp according to the following procedure.
  1) Locate punch mark (a) of bridge (9) as shown in the figure, and adjust the position of bridge to be under band (10).
  2) Tighten bolt (11) so that dimension (b) is between 8 and 10 mm.
     Threaded portion of bolts: **PANDO 18B from Three Bond**
  3) Tighten bolt (11) with the following torque.
     Bolt: **25 ± 5 Nm {2.55 ± 0.5 kgm}**

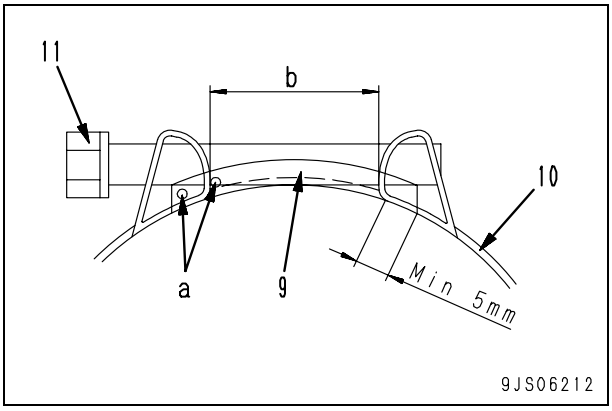

Removal and installation of engine assembly

Special tools

Symbol	Part No.	Part name	Necessity	Q'ty	New/Remodel	Sketch
Q	799-703-1200	Service tool kit	■	1		
	799-703-1100	Vacuum pump (100 V)	■	1		
	799-703-1111	Vacuum pump (220 V)	■	1		
	799-703-1121	Vacuum pump (240 V)	■	1		
	799-703-1401	Gas leak detector	■	1		

Removal

⚠ **Disconnect the negative terminal (–) of the battery.**

1. Drain the coolant.
   Coolant: **82ℓ**
2. Remove the engine hood referring to the section "Removal and installation of engine hood assembly".
3. Recover the refrigerant gas of air conditioner.
4. Open undercovers (front and center)
   ⚠ **Open carefully using floor jack, wire rope, etc.**
5. Remove air intake connector (1) with hose. [*1]
6. Remove stay (2).

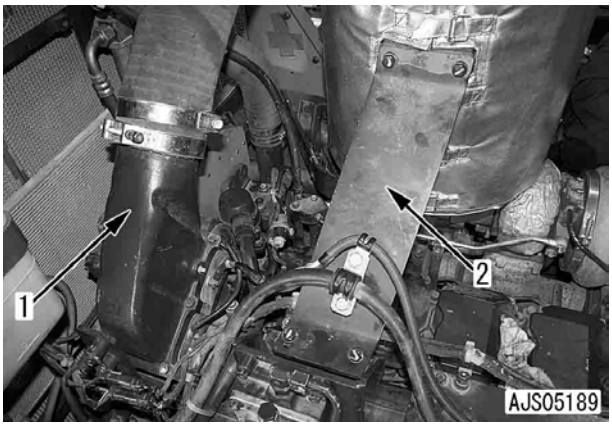

7. Remove heat insulation cover (3) and drain tube (4).

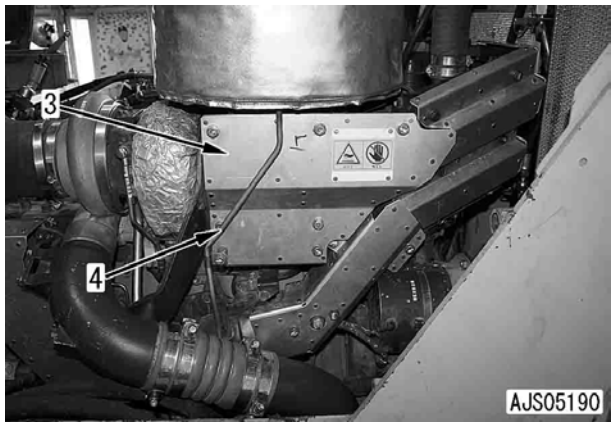

8. Remove muffler (5).
   Muffler: **50 kg**

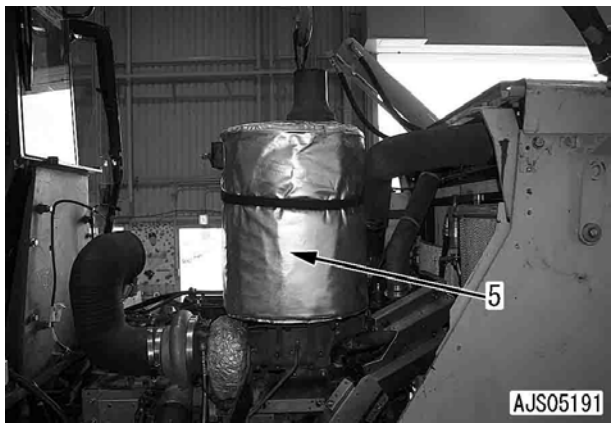

9. Remove radiator assembly referring to the section, "Removal and installation of radiator assembly".
10. Remove aftercooler assembly referring to the section, "Removal and installation of aftercooler assembly".
11. Remove reservoir tank (6) with bracket (7).

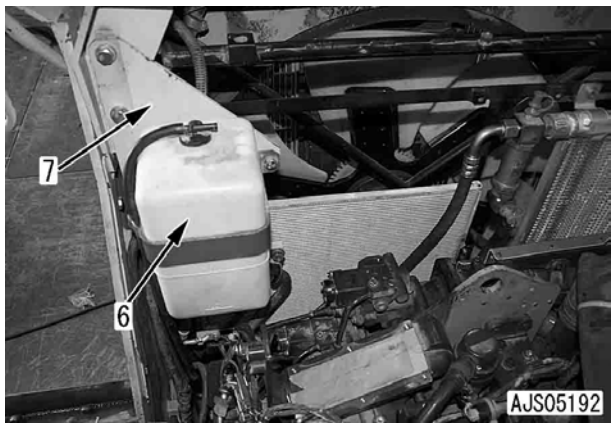

12. Disconnect ground (8) at engine left side.

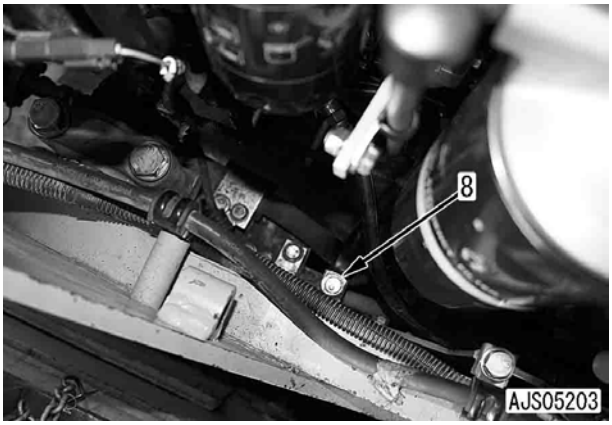

13. Disconnect fuel hose (9) from fuel supply pump.

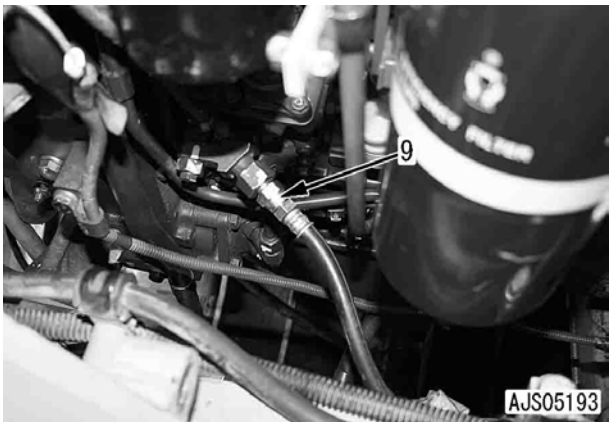

14. Disconnect fuel hose (10) from fuel pre filter.

15. Remove after cooler tube (11). [*2]

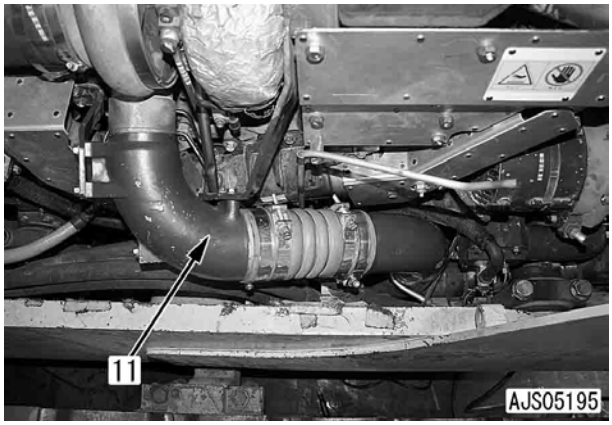

16. Sling water tube (12) and remove it. [*3]

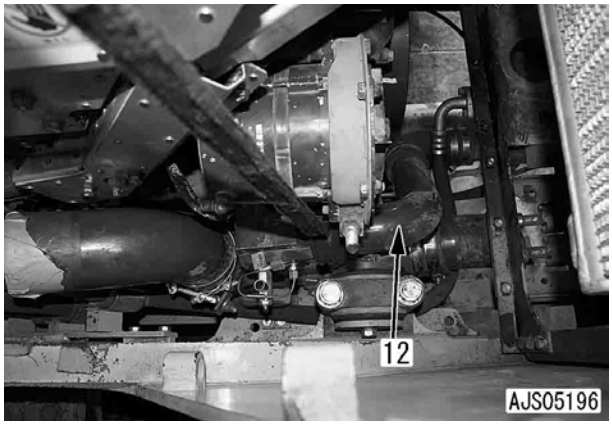

17. Disconnect starting motor B terminal ST/B (13) and heater hose (14).

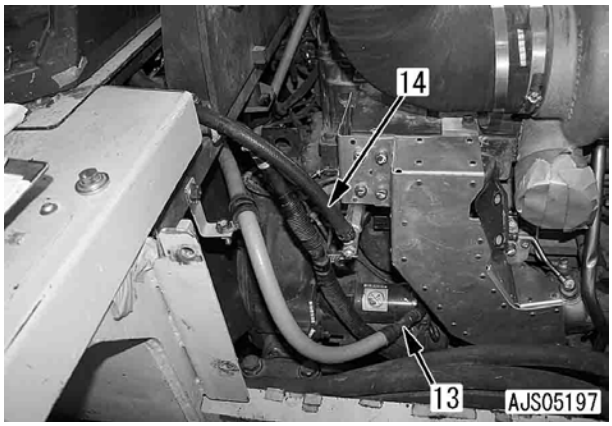

18. Disconnect two hoses each from air conditioner condenser (15) and oil cooler (16), and remove frame (17).

19. Remove flame (18).

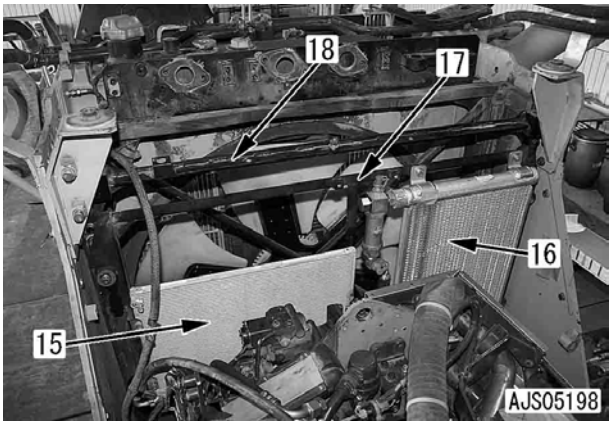

20. Disconnect fuel spill hose (19).

21. Remove clamp (20), and remove bracket (21).

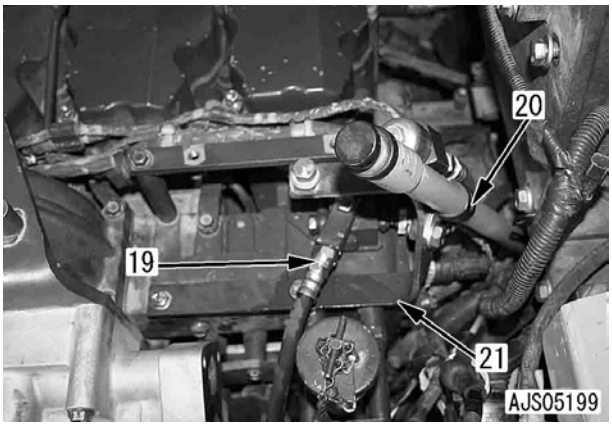

22. Disconnect connector AC05 (22).

23. Remove receiver tank (23) and move.

24. Disconnect connectors EG1 (24) and EG2 (25).

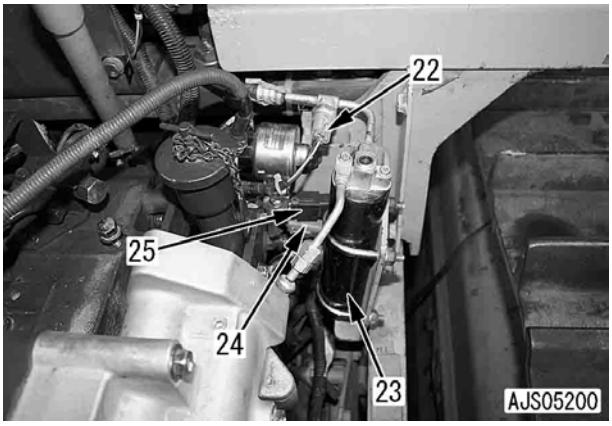

25. Disconnect hose (26) from radiator lower tank. [*4]

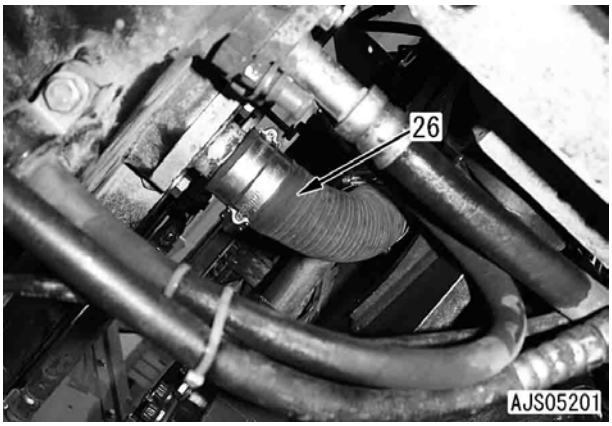

26. Separate universal joint (27) at the engine side. [*5]

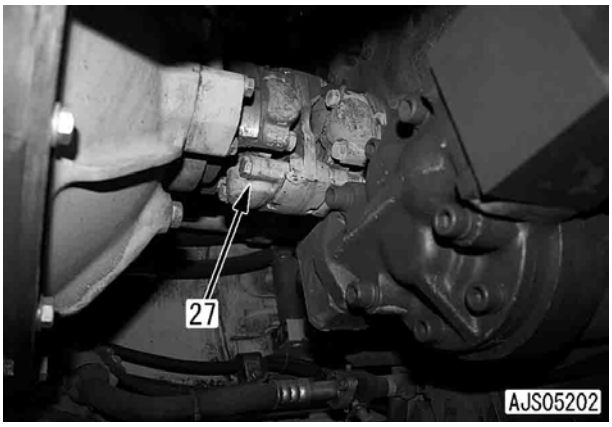

27. Temporarily sling engine assembly.

28. Remove mounting bolts (28) and (29), four pcs.each. [*6]

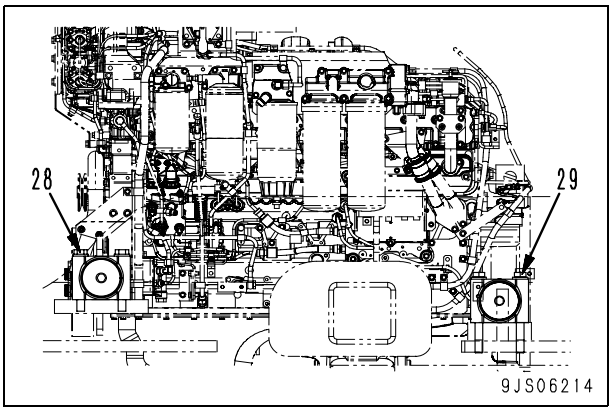

29. Sling engine assembly (30) and remove it.
    ★ Check all wires and pipes are removed.
    ★ Remove carefully to avoid any interference with the machine body.

Installation

- Carry out installation in the reverse order to removal.

[*1] [*2]
★ When loosened hose clamp, replace clamp with new one.
★ Tighten the hose clamp according to the following procedure.
    1) Locate punch mark (a) of bridge (31) as shown in the figure, and adjust the position of bridge to be under band (32).
    2) Tighten bolt (33) so that dimension (b) is between 8 and 10 mm.
        Threaded portion of bolts: **PANDO 18B from Three Bond**
    3) Tighten bolt (33) with the following torque.
        Bolt: **25 ± 5 Nm {2.55 ± 0.5 kgm}**

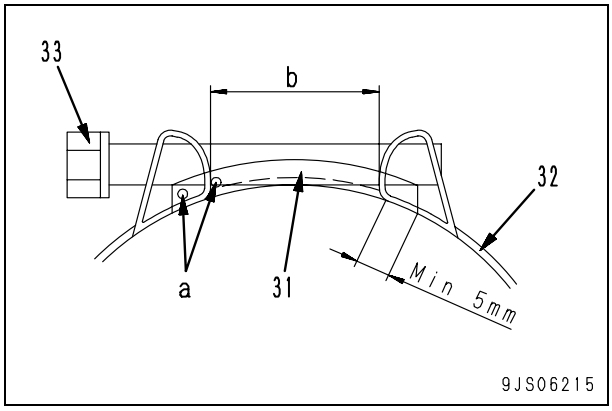

[*3]
Engine side tube flange: **Gasket sealant (LG-1)**
Hose clamp: **8.8 ± 0.5 Nm {90 ± 5 kgcm}**

[*4]
Hose clamp: **8.8 ± 0.5 Nm {90 ± 5 kgcm}**

[*5]
Universal joint mounting bolt: **98 – 123 Nm {10 – 12.5 kgm}**

[*6]
Engine mount fixing bolt: **823.8 – 1029.7 Nm {84 – 105 kgm}**

- **Charging air conditioner with refrigerant gas**

★ Charge the air conditioner system with refrigerant gas using tool **Q.**

Removal and installation of engine hood assembly

Removal

⚠ Disconnect the negative terminal (–) of the battery.

1. Remove pre cleaner duct (1) and exhaust tube (2). [*1]

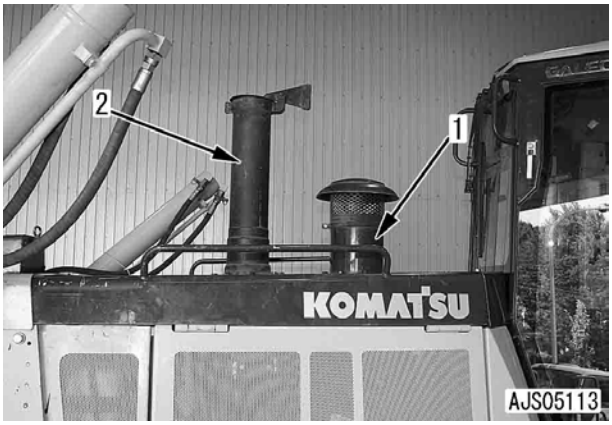

2. Remove cover (3).

3. Open cover (4), and remove covers (5) through (7).
   ★ Carry out the same operation to the opposite side.

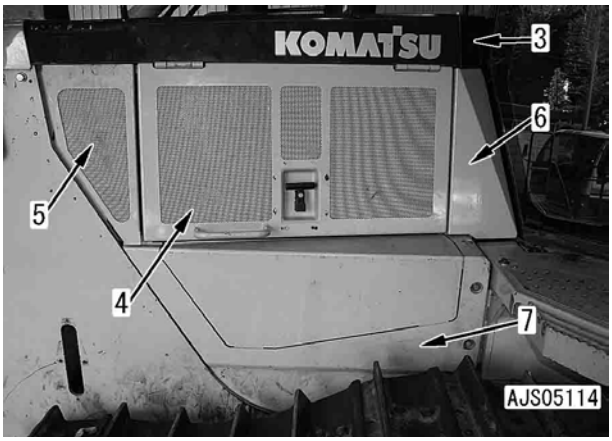

4. Remove two mounting bolts (9) for tube (8).

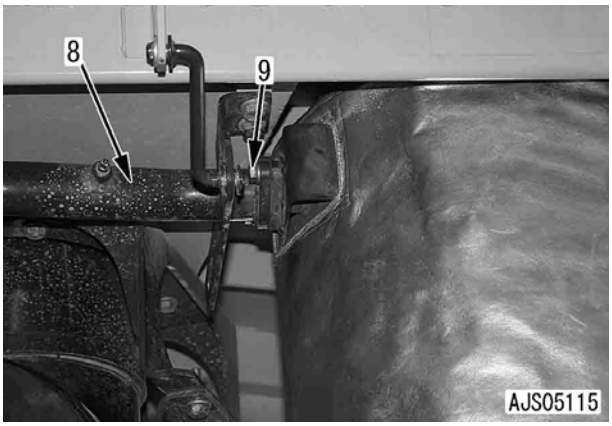

5. Remove hose (10). [*2]

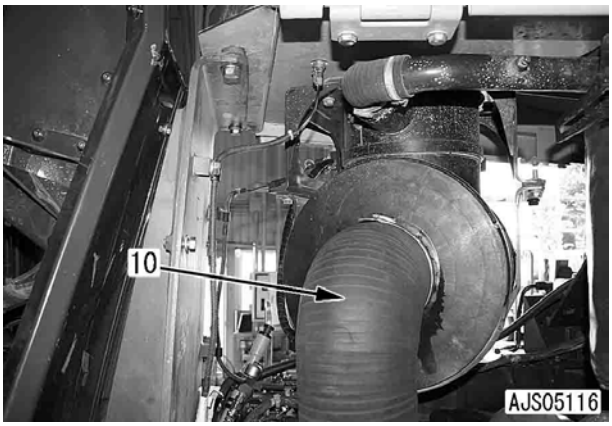

6. Disconnect connector AF1 (11).

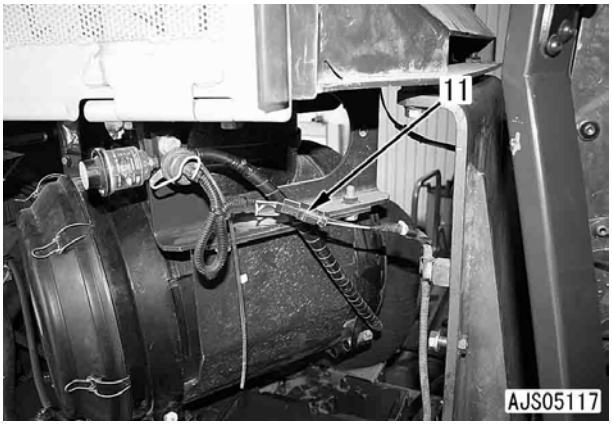

7. Sling engine hood (12) and remove it.
   Engine hood: **170 kg**

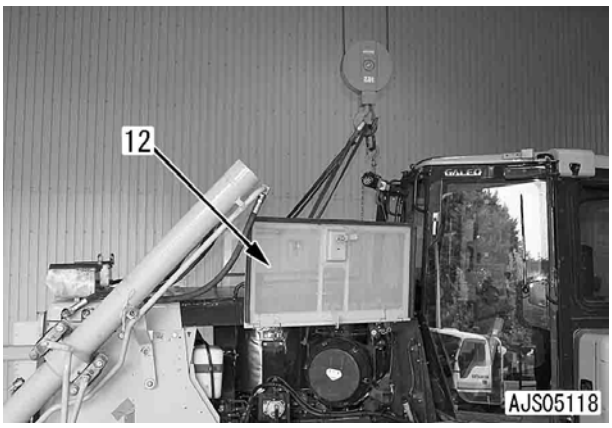

Installation

- Carry out installation in the reverse order to removal

[*1]
Pre cleaner duct and exhaust pipe mounting bolt: **98 – 123 Nm {10 – 12.5 kgm}**

[*2]
Hose clamp: **8.8 ± 0.5 Nm {90 ± 5 kgcm}**

D155AX-6 Bulldozer

Form No. SEN01205-00

© 2006 KOMATSU
All Rights Reserved
Printed in Japan 05-06 (02)

BULLDOZER

D155AX-6

Machine Model	Serial Number
D155AX-6	80001 and up

50 Disassembly and assembly

Power train, Part 1

Power train, Part 1 2
Removal and installation of damper assembly 2
Disassembly and assembly of damper assembly 5
Removal and installation of power train unit assembly 11
Disconnection and connection of power train unit assembly 15

Power train, Part 1

Removal and installation of damper assembly

Removal

1. Drain the oil in damper case.
   Damper case: **1.5ℓ**
2. Remove floor frame assembly referring to the section, "Removal and installation of floor frame assembly".
3. Remove work equipment and HSS pump assembly referring to the section, "Removal and installation of work equipment and HSS pump assembly".
4. Remove the cooling fan pump assembly referring to the section, "Removal and installation of cooling fan pump assembly".
5. Disconnect breather hose (1).
6. Remove oil level gauge (2).

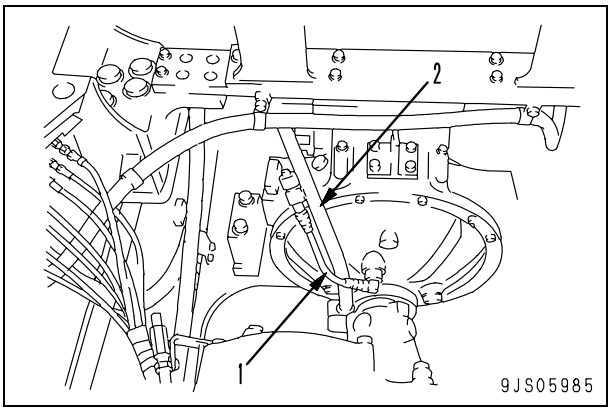

7. Sling universal joint assembly (3) and remove it. [*1]
   Universal joint assembly: **20 kg**
8. Pull out torque converter side coupling (4).

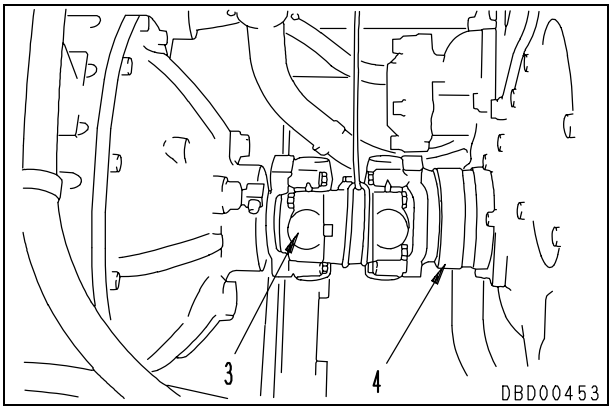

9. Remove mounting bolts for damper cover assembly (5), and install two guide bolts [1] diagonally. [*2]
10. Using forcing bolt [2], pull out damper cover assembly (5) so that the lifting tool can be applied, and then remove it. [*3]
    Damper cover assembly: **60 kg**

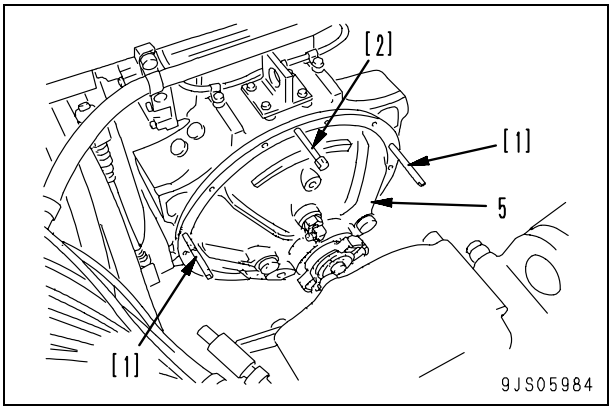

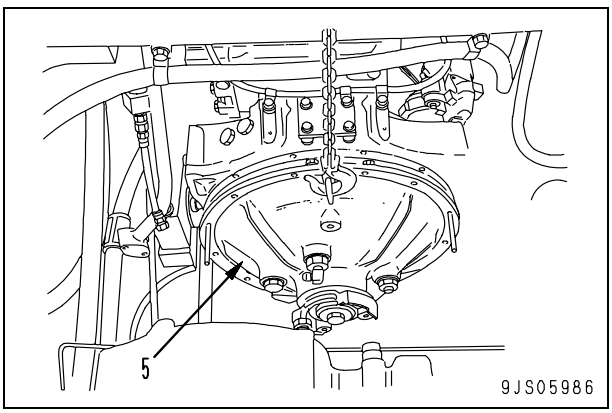

11. Remove damper assembly.
    1) Remove two mounting bolts for damper assembly (6), and set guide bolts [3]. [*4]
    2) Remove the rest of mounting bolts, and pull out damper assembly using forcing bolt [4]. [*5]
    3) Use eyebolt [5] to remove damper assembly (6).

    Damper assembly: **60 kg**

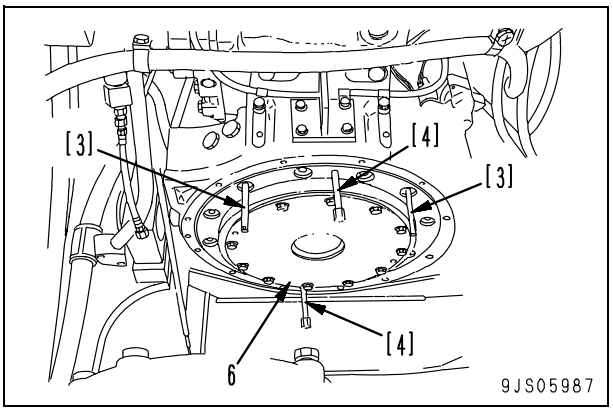

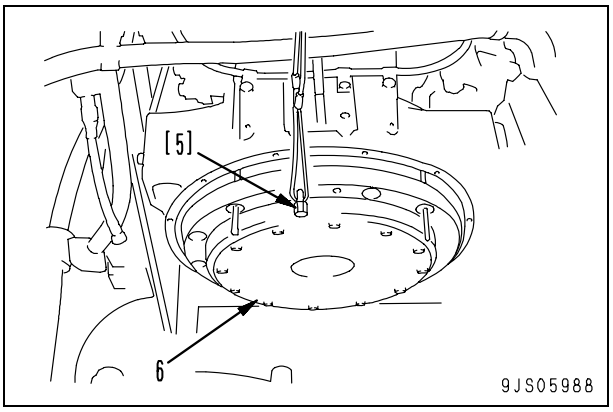

Installation

- Carry out installation in the reverse order of removal.

[*1]
Universal joint mounting bolt:
Liquid adhesive (LT-2)
Universal joint mounting bolt:
98 – 123 Nm {10 – 12.5 kgm}

[*2]
★ Apply gasket sealant to damper cover, and tighten mounting bolts 2 to 3 minutes after application.
Damper cover mounting bolt:
98.1 – 122.6 Nm {10 – 12.5 kgm}

[*3]
★ Install damper cover assembly according to the following procedure.
1) Degrease the spline portion "a" of shaft (7), apply dry lubricant A, and leave it 2 to 3 minutes.
2) Fill "b" portion of inner body (8) with about 80 g of lithium base extreme pressure grease with molybdenum disulphide B.

A	Dry lubricant with molybdenum disulphide	Sumiko lubricant Rocol Dry Splay or equivalent
B	Lithium base extreme pressure grease with molybdenum disulphide	• Kyodo yushi Molylex No.2 or an equivalent • Showa Shell Sekiyu Retinax AM or an equivalent • Nippon Oil Corporation Molytex or an equivalent

3) Apply gasket sealant to the flange portion of damper cover assembly.
   ★ Apply it to the engine side also.
   ★ Apply it with the thickness 0.1 to 0.2 mm.
   Damper cover mounting face:
   Gasket sealant (LG-6)

4) Install the damper cover assembly to the engine.

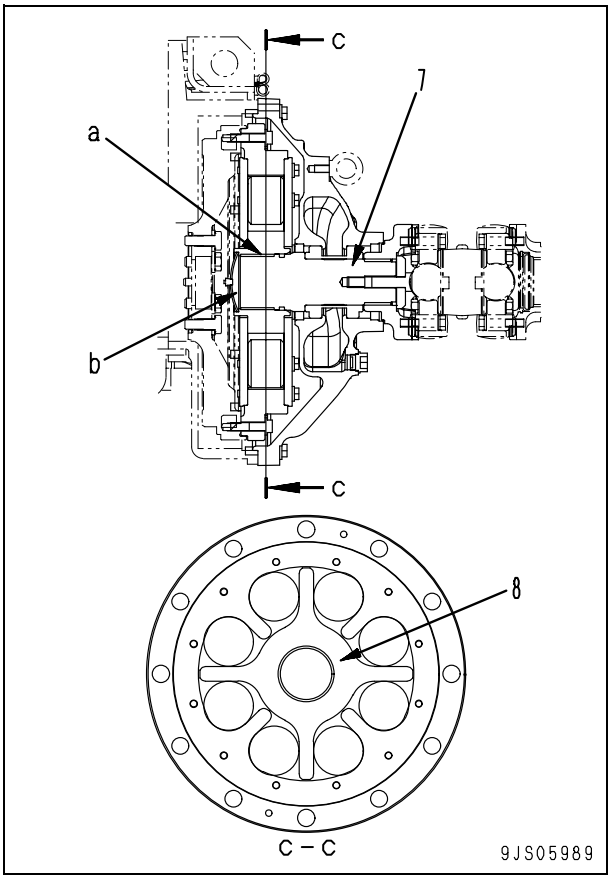

[*4] [*5]
Damper mounting bolt:
98 – 122.6 Nm {10 – 12.5 kgm}

- **Refilling with oil**

Damper case: **1.5ℓ**

Drain plug: **58.5 – 78.5 Nm {6 – 8 kgm}**

Disassembly and assembly of damper assembly

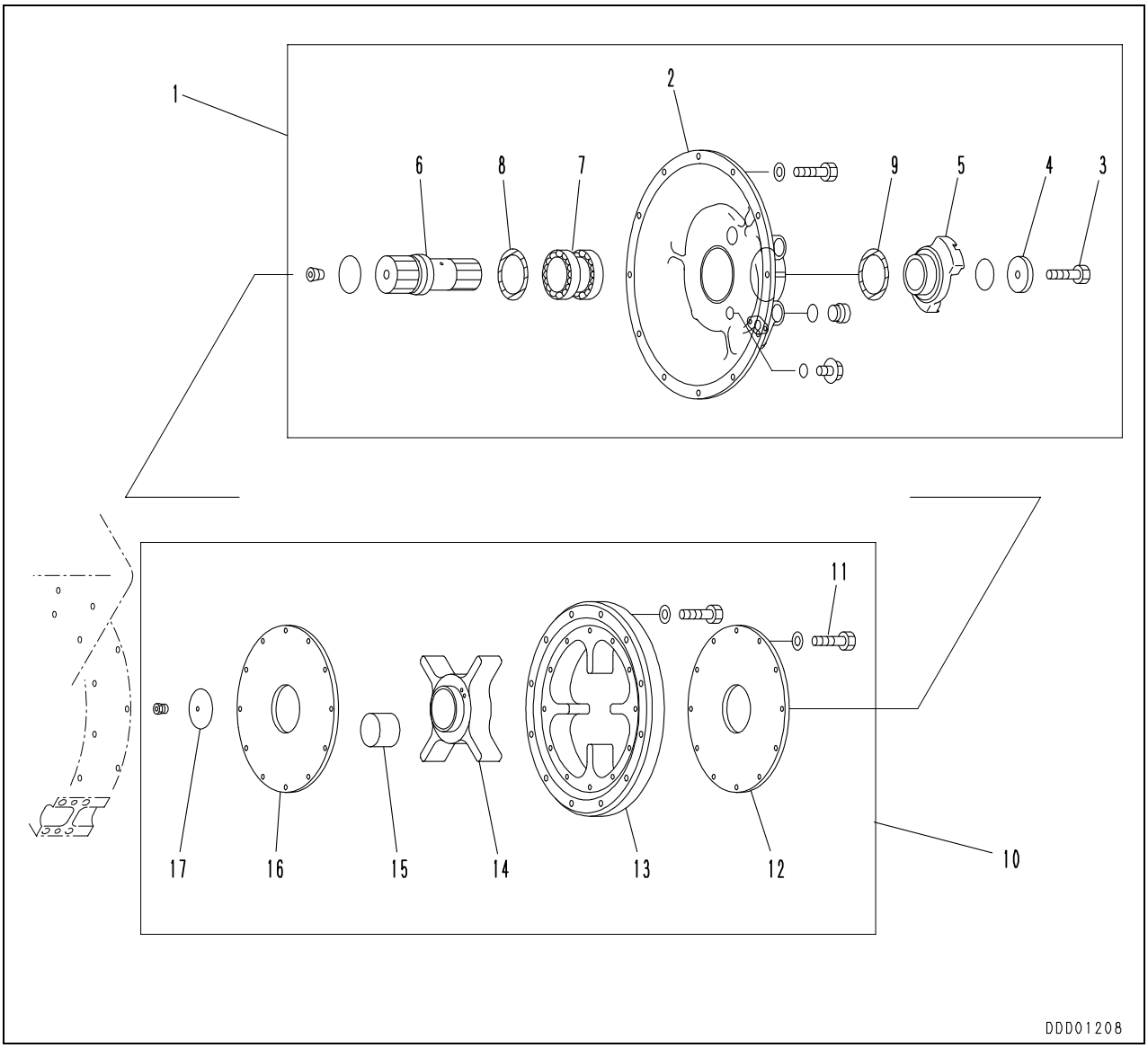

Special tools

Sym-bol	Part number	Part name	Necessity	Q'ty	New/Remodel	Sketch
F	791-612-1100	Installer	■	1		
	790-101-4200	Puller (294 kN {30 ton})	■	1		
	790-101-1102	Hydraulic pump	■	1		

Disassembly

Disassembly of damper cover assembly (1)

1. Coupling

Remove bolt (3) from cover (2), then remove holder (4) and coupling (5).

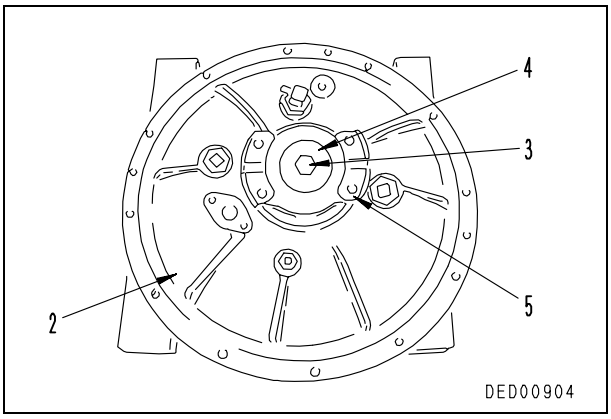

2. Shaft

1) Set damper cover assembly (1) to block [1], and remove shaft (6) by tapping it from output side with plastic hammer, etc.

★ Shaft (6) will be pulled out with inner race (7-1) of bearing (7) and oil seal (8).

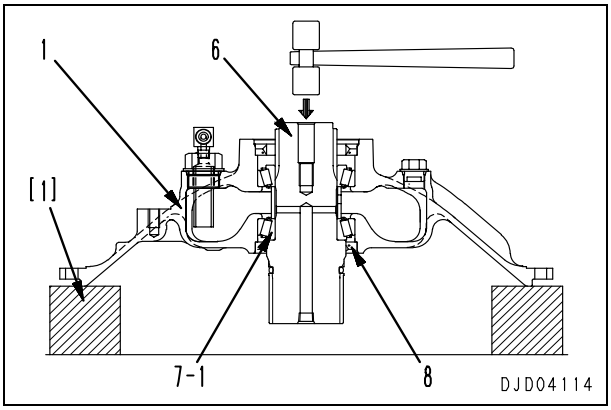

2) Remove collar (7-2) and O-ring of bearing (7) from shaft (6), and pull out inner race (7-1).

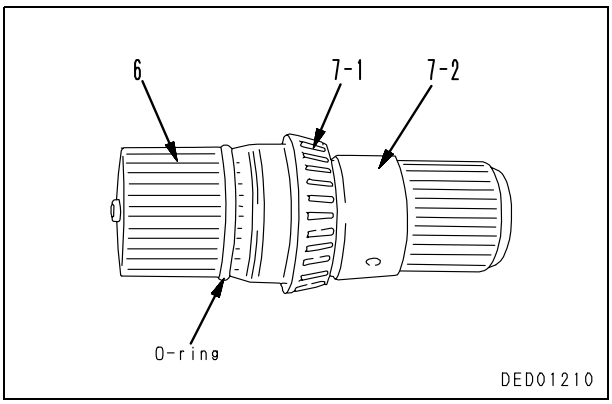

3. Bearing and oil seal

1) Remove oil seal (9) from cover (2), and pull out inner race (7-3) of bearing (7).

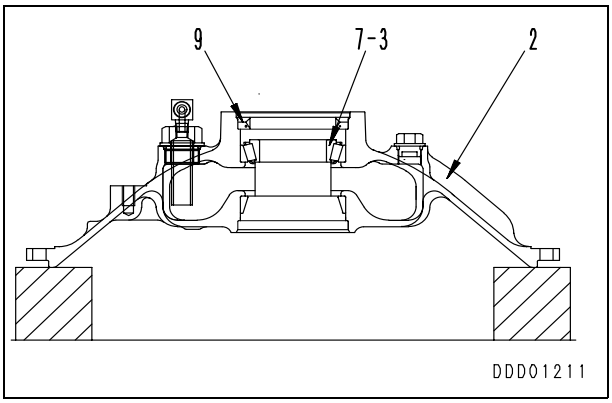

2) Remove outer races (7-4) and (7-5) of bearing (7) from cover (2).

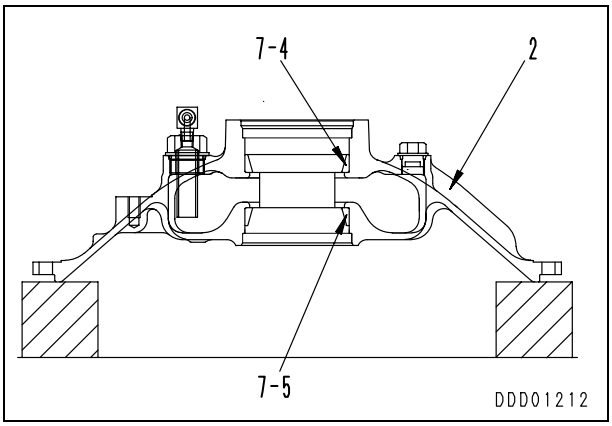

Disassembly of damper assembly (10)

1. Unscrew bolt (11) to remove flange (12).

2. Remove outer body (13), inner body (14) and cushion (15).

3. Pull out plug (17) from flange (16).
   ★ This procedure applies only when replacing plug.

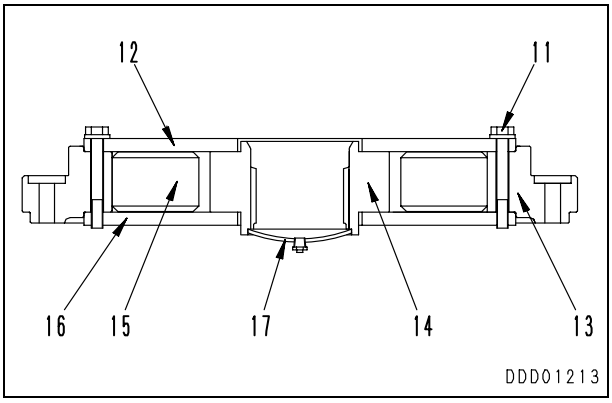

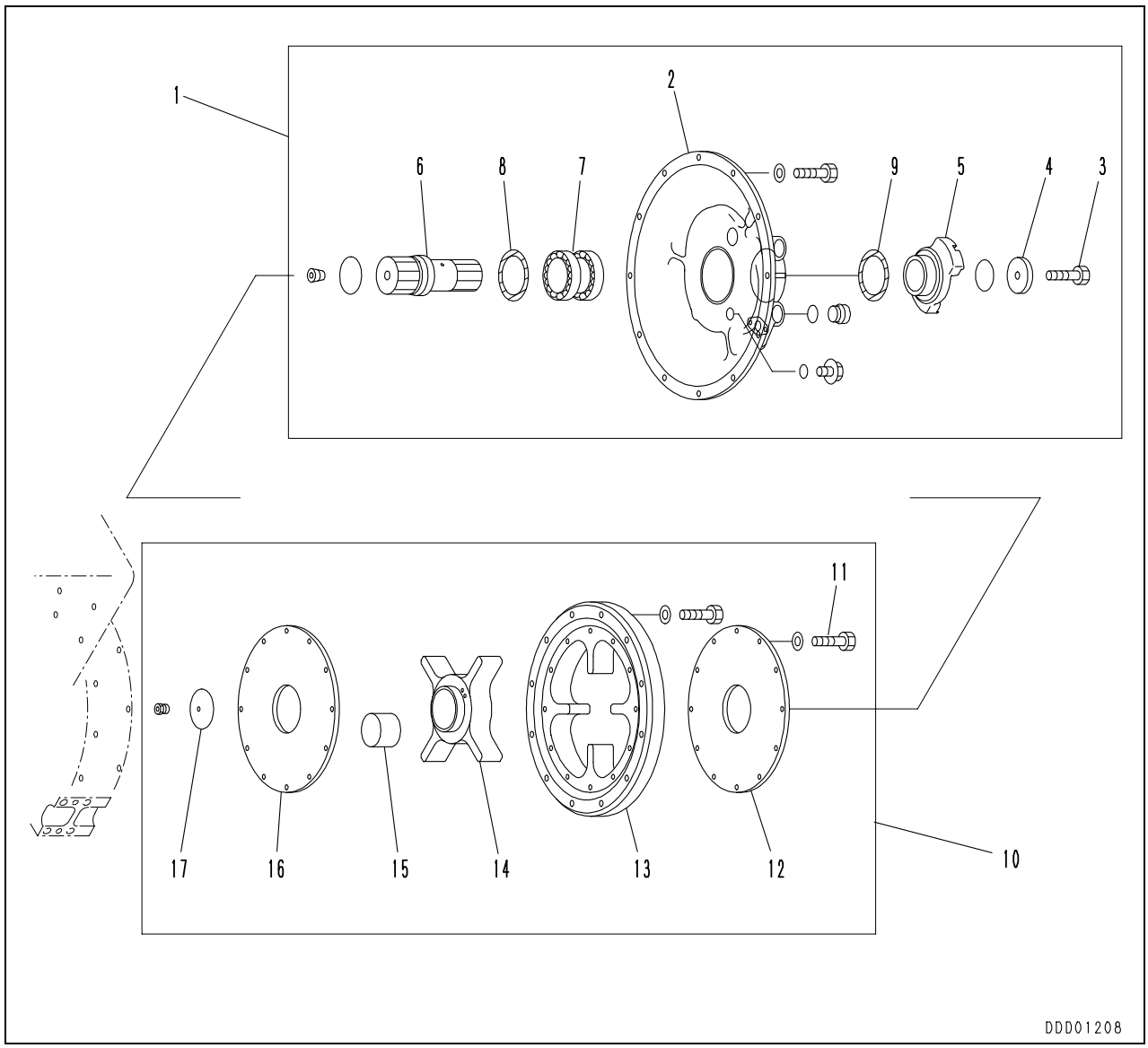

Assembly

Assembly of damper assembly (10)

1. Set flange (16) and outer body (13) to cylinder [1], matching their bolt holes, and install inner body (14).
   - Mating surface of flange and outer body: **Gasket sealant (LG-6)**
   - Outer body inner surface: **Grease (G2-LI)**
   - Cushion contact surface of inner body: **Grease (G2-LI)**

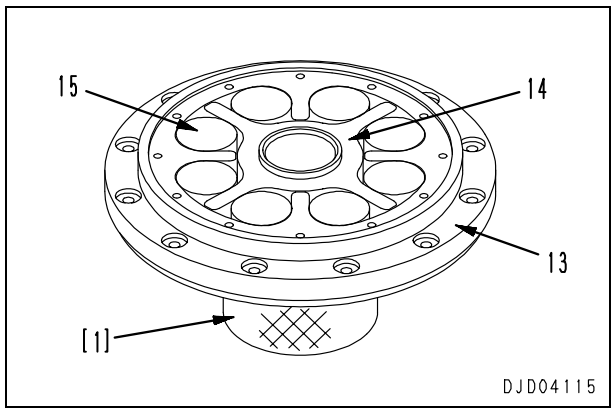

2. Install cushion (15).
   ★ Apply grease (GL-LI) to entire surface of cushion.
   ★ After installing the cushion, fill clearances (a) (16 points) between inner body (14) and outer body (13) with grease of 30% amount of the space.

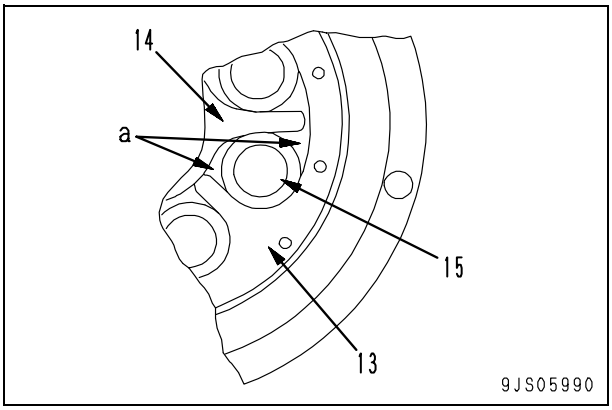

3. Install flange (12) and tighten bolts (11).
   Mounting bolt:
   58.8 – 73.5 Nm {6 – 7.5 kgm}

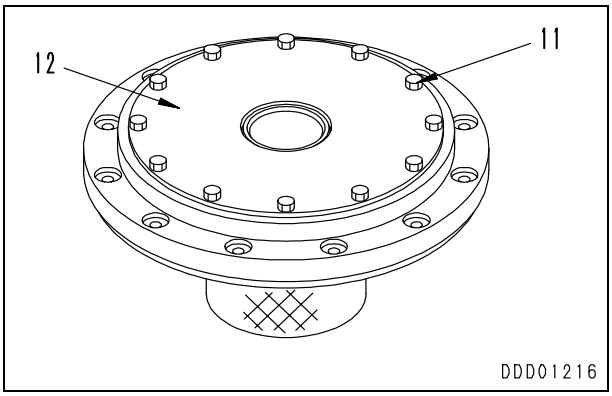

4. Fill (b) portion of inner body (14) with about 80 g of the following grease.
   : **Grease**

Grease	Supplier part name
Lithium base extreme pressure grease with molybdenum disulphide	• Kyodo yushi Molylex No.2 or an equivalent • Showa Shell Sekiyu Retinax AM or an equivalent • Nippon Oil Corporation Molytex or an equivalent

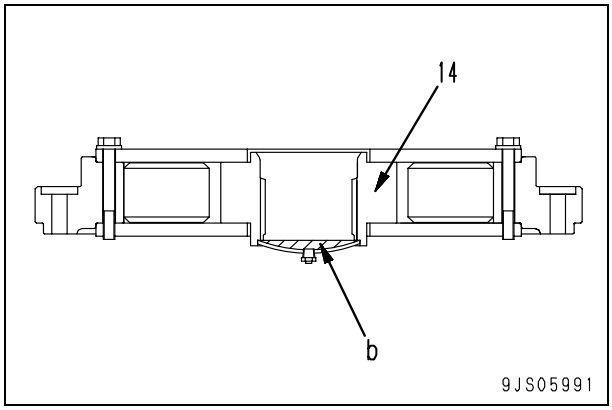

Assembly of damper cover assembly (1)

1. Press fit outer races (7-4) and (7-5) of bearing (7) to cover (2) using push tool [2].

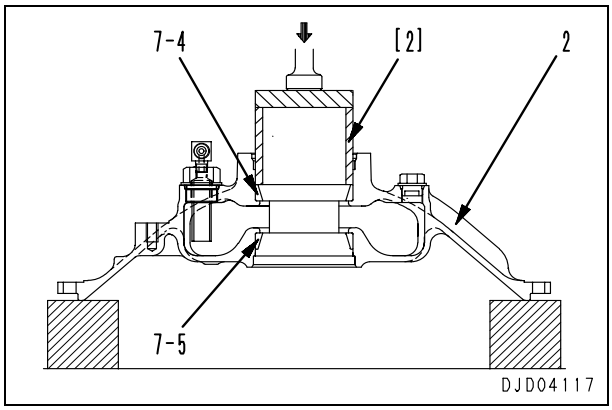

2. Press fit inner race (7-1) of bearing (7) to shaft (6) with tool **F**.

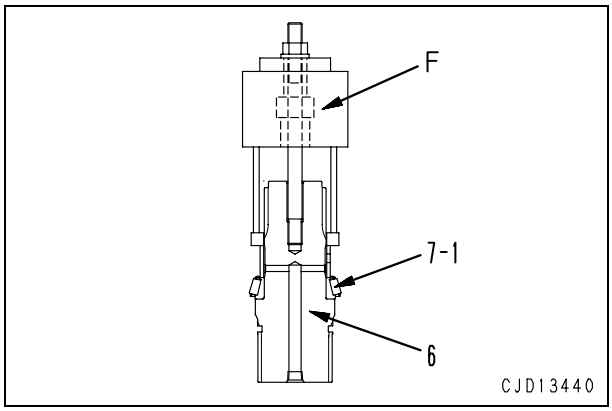

3. Install collar (7-2) and O-ring to shaft (6).

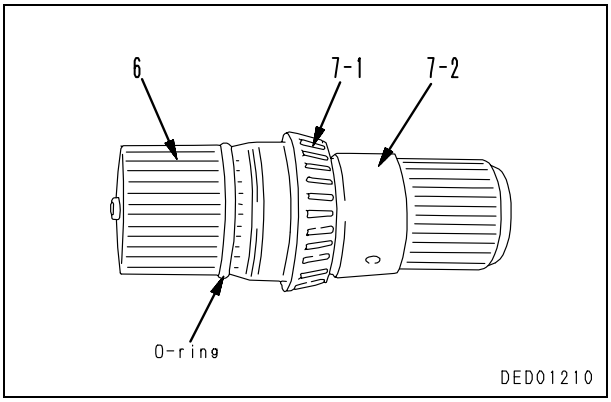

4. Set cover (2) to shaft (6), and press fit bearing inner race (7-3) using tool **F**.

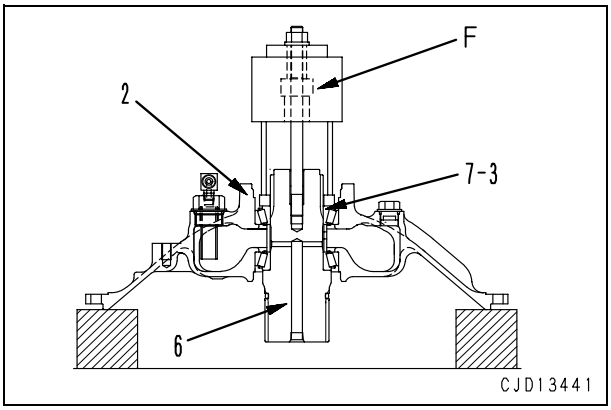

5. Install oil seals (8) and (9) to cover (2).
   - Press fitting surface of oil seal: **Gasket sealant (LG-5)**
   - Oil seal lip surface: **Grease (G2-LI)**
   - ★ Apply gasket sealant at oil seal surface thinly, and wipe off extra sealant.

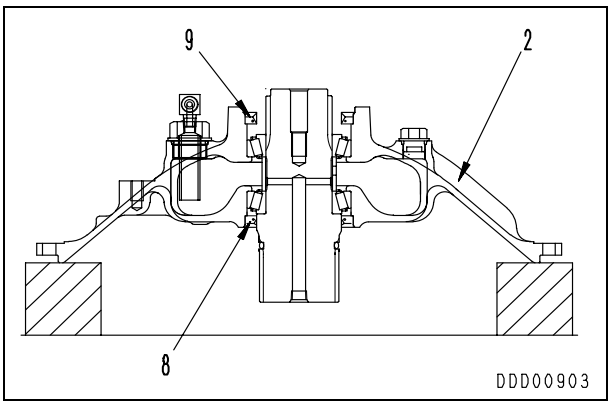

6. Install coupling (5) and holder (4), and tighten bolt (3).
   - Mounting bolt: **245.2 – 308.9 Nm {25 – 31.5 kgm}**

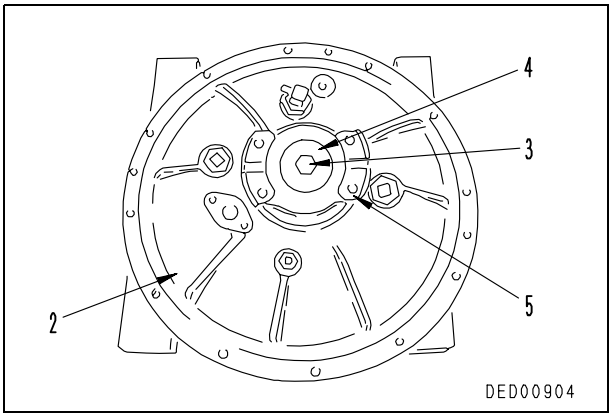

Removal and installation of power train unit assembly

Removal

⚠ **Park the machine at the level place, lower the work equipment fully to the ground, and disconnect the negative terminal (–) of the battery.**

1. Drain the oil from hydraulic tank and power train case.

   Hydraulic tank: **85ℓ**
   Power train case: **90ℓ**

2. Remove floor frame assembly referring to the section, "Removal and installation of floor frame assembly".

3. Disconnect connectors PUMP (1) and HSS (2) at power train unit right side.

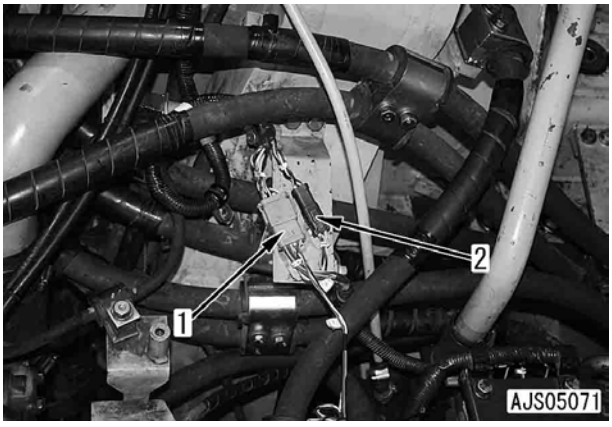

4. Disconnect 13 hoses (3) of split flange from control valve.

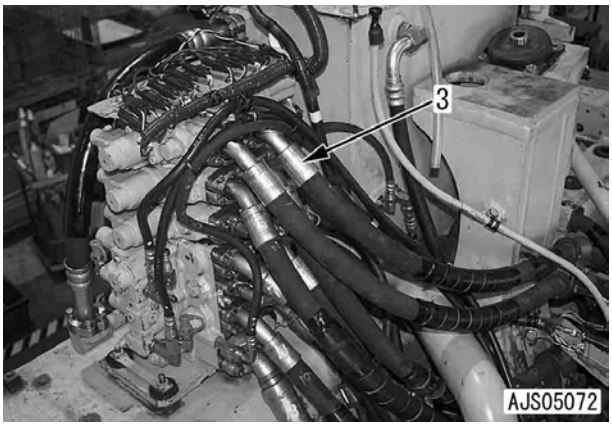

5. Disconnect hoses (4) through (7).

6. Disconnect hoses (8) through (11), and remove hose clamps (12) and (13).

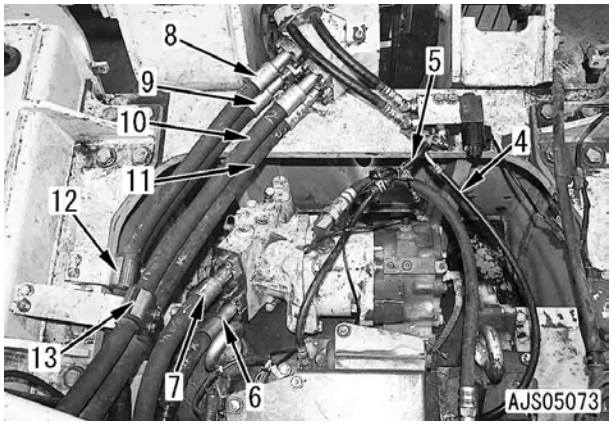

7. Disconnect hoses (14) and (15) at the rear of hydraulic tank.

8. Remove oil level gauge (16) and oil filler tube (17).

9. Remove clamps (18) through (20), and remove hose.

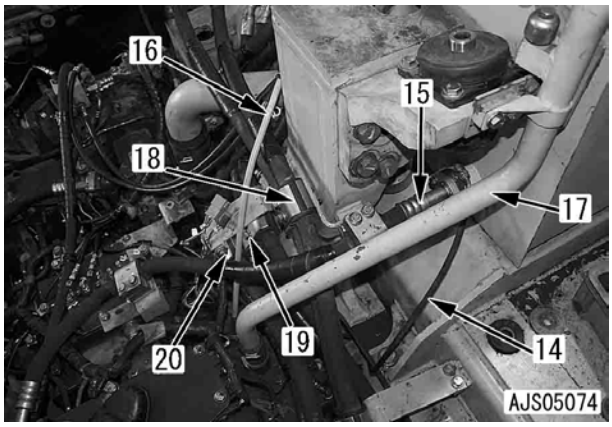

10. Remove the clamps for wirings (21) through (23), and move wires.

11. Disconnect tube (24).

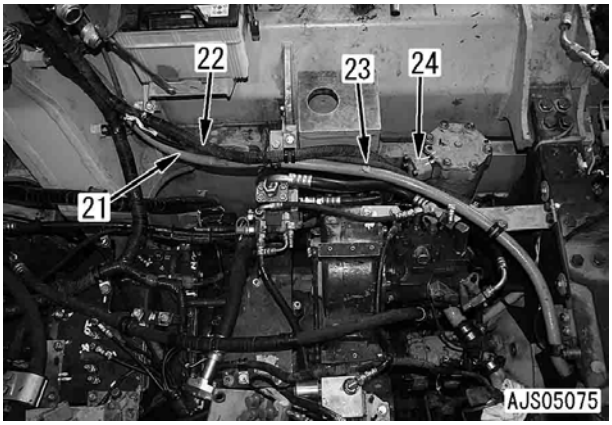

12. Remove covers (25) at both sides of steering case. [*1]

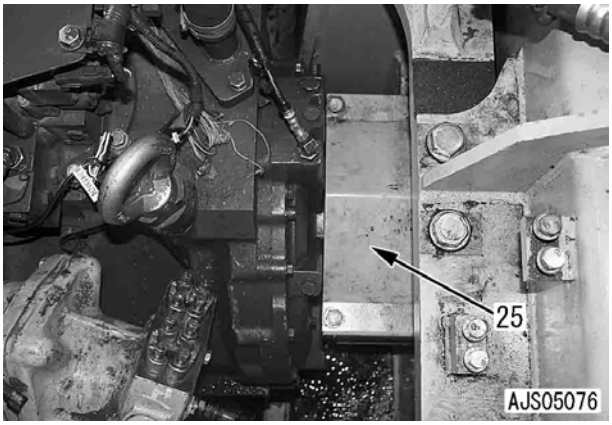

13. Remove cap (26). [*1]

14. Loosen clamp (27), and move seal (28) outward slightly. [*2]

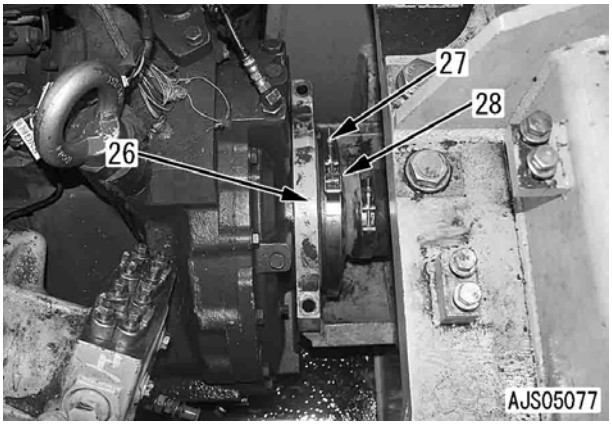

15. Remove final drive shaft cover (29).

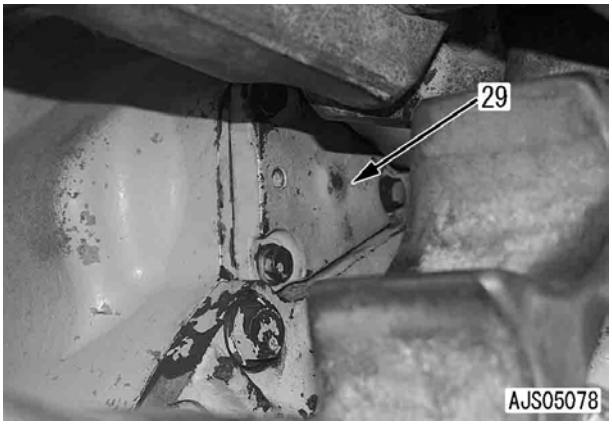

16. Pull out drive shaft (30) to the position where the spline portion of steering case side comes out, using bolt [1] (M10 x 1.5).
    ★ If the shaft is hard to be pulled out, set jack at the shoe grouser and lift up to the position where the shaft can easily be pulled out.

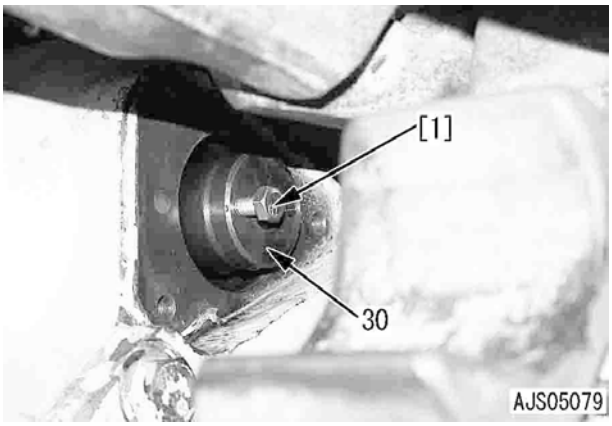

17. Disconnect hoses (31) and (32) at the right front of power train unit.

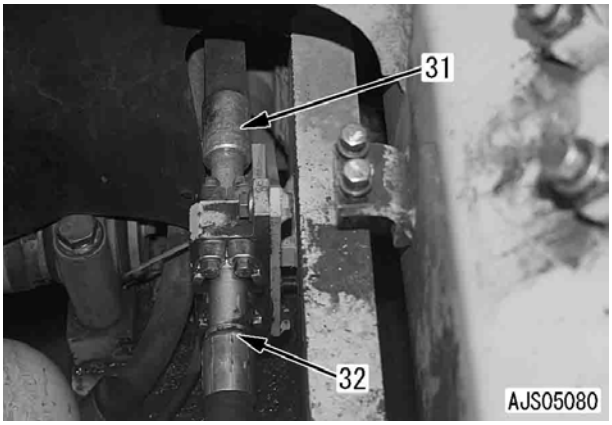

18. Disconnect hose (33) at the lower left front of power train unit.

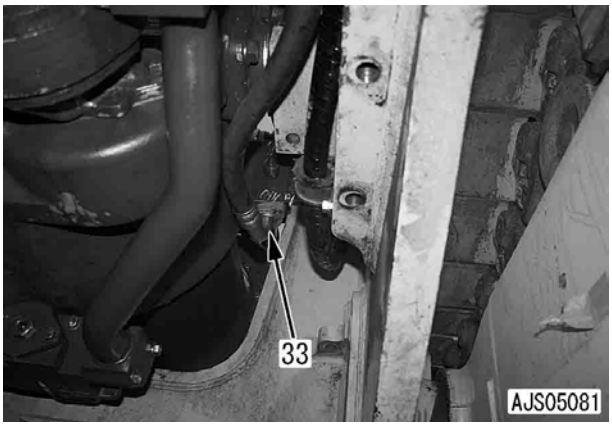

19. Sling power train filter (34) and remove it.

Power train filter: **20 kg**

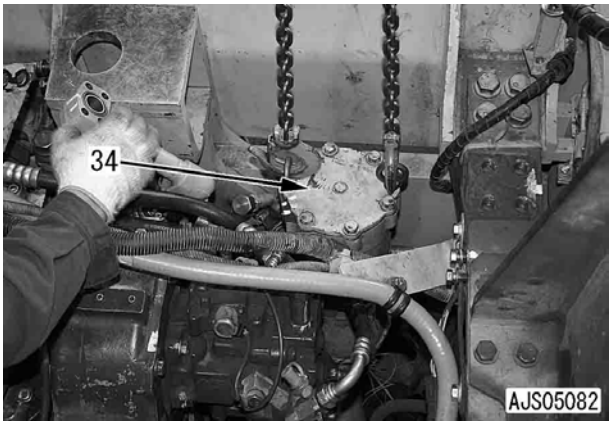

20. Separate universal joint (35) at torque converter side. [*3]
    - ★ After separating, push in yoke toward torque converter and separate completely.

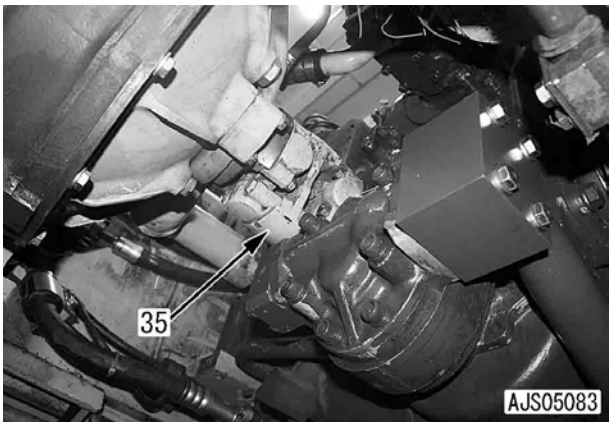

21. Remove four mounting bolts (36) at front left and right of power train unit. [*4]

22. Sling power train unit assembly (37) and remove it. [*5]
    - ★ Check all wires and pipes are removed.
    - ★ Remove carefully to avoid any interference with the machine body.

Power train unit assembly: **2,400 kg**

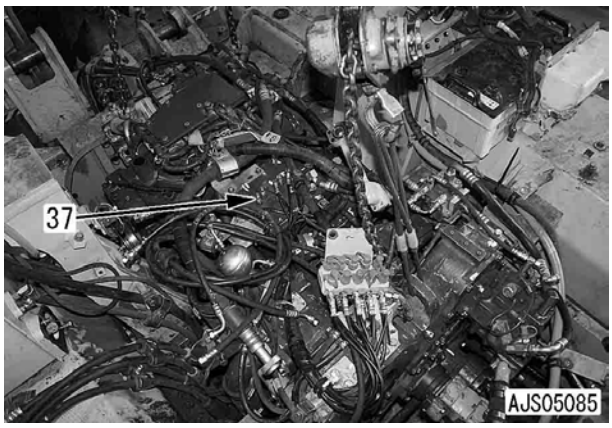

Installation

- Carry out installation in the reverse order of removal.

[*1]
Mount cap fixing bolt:
245 – 309 Nm {25 – 31.5 kgm}

[*2]
★ Clamp seal of coupling securely at the bulge portion, and assemble clamp threaded portion parallel to the cap mounting seat surface.

[*3]
Universal joint mounting bolt:
98 – 123 Nm {10 – 12.5 kgm}

[*4]
Mount (front) fixing bolt:
824 – 1,030 Nm {84 – 105 kgm}

[*5]
★ When installing power train unit assembly, install it carefully not to damage seal (28).

- **Refilling with oil**
  Fill the oil through oil filler port to the specified level. Start the engine to circulate the oil through the piping, and recheck the oil level.

  Hydraulic tank: **85ℓ**

  Power train case: **90ℓ**

Disconnection and connection of power train unit assembly

Disconnection

1. Set power train unit assembly (1) on block [1].
   Power train unit assembly: **2,400 kg**

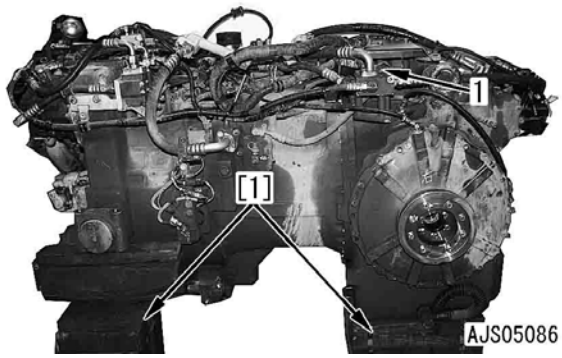

2. Disconnect all the connectors from power train unit to remove wiring harness referring to Diagrams and drawings section, "Electrical circuit diagram, Connector table and arrangement drawing".

3. Remove cover (2), and remove pressure pickup hose (3). [*1]
   ★ Disconnect 10 pressure pickup hoses at power train unit side.

4. Disconnect hose (4).

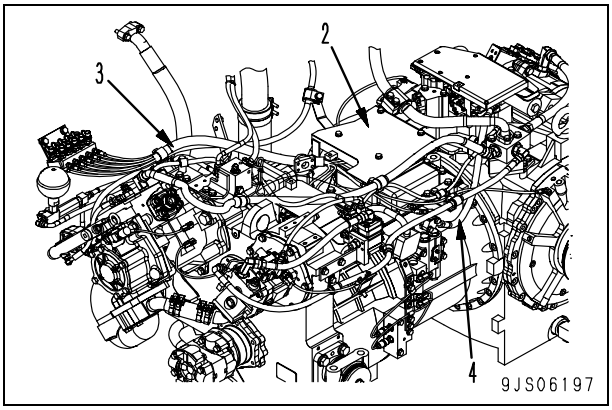

5. Remove tube (5).

6. Remove work equipment and HSS pump assembly (6).
   Work equipment and HSS pump assembly: **110 kg**

7. Remove cooling fan pump assembly (7).
   Cooling fan pump assembly: **25 kg**

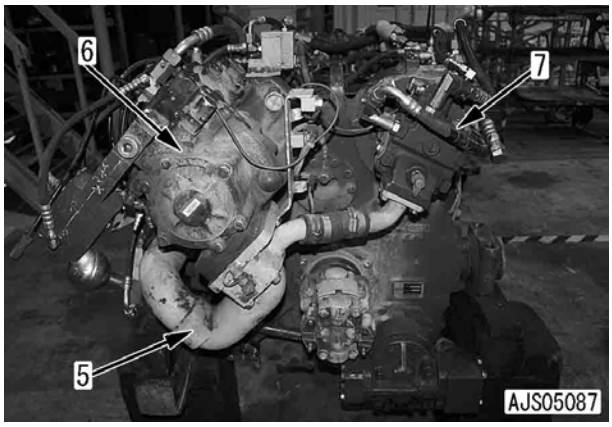

8. Remove tubes (8) and (9), and remove scavenging pump assembly (10).
   Scavenging pump assembly: **20 kg**

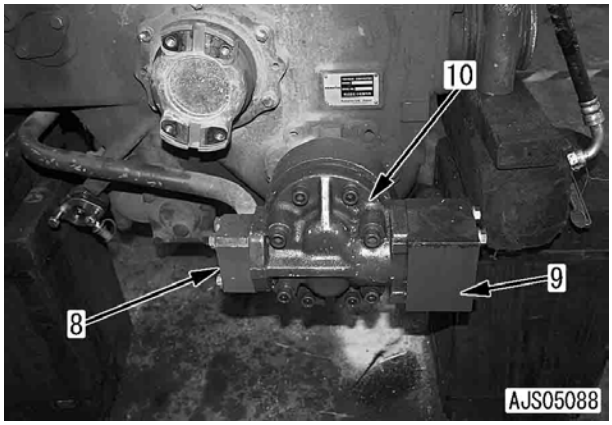

9. Remove tubes (11) and (12), and remove power train and lubrication pump assembly (13).

   Power train and lubrication pump assembly: **30 kg**

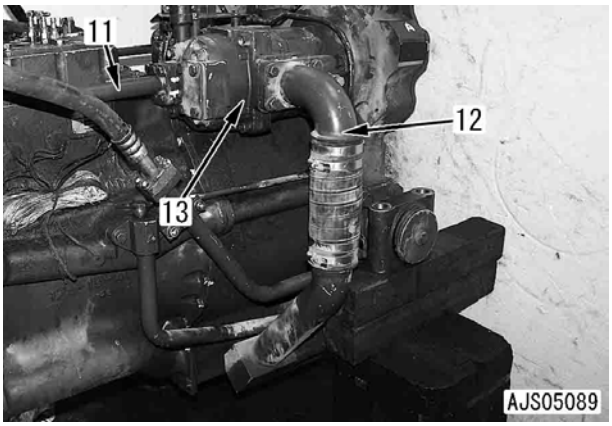

10. Remove tube (14).

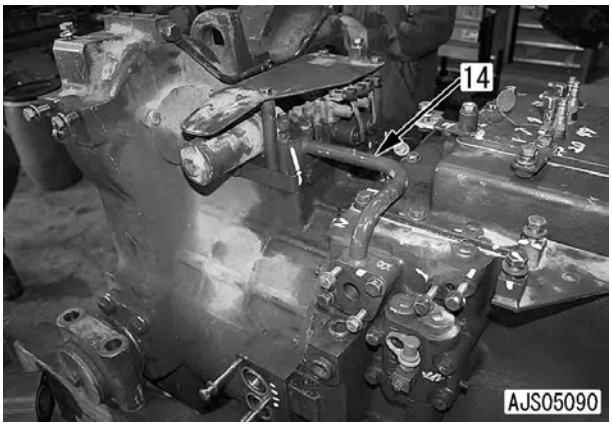

11. Remove coupling (15).

12. Temporarily sling PTO, torque converter and transmission assembly (16), and remove 18 mounting bolts to separate from HSS unit assembly (17). [*2]

   PTO, torque converter and transmission assembly: **1,500 kg**

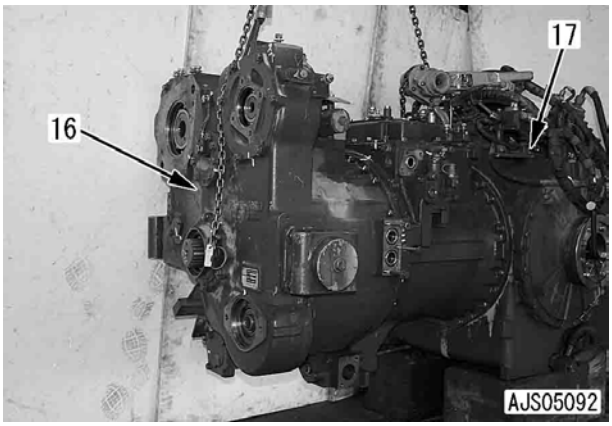

13. Set PTO, torque converter and transmission assembly (16) to block [2] with its PTO side upward.

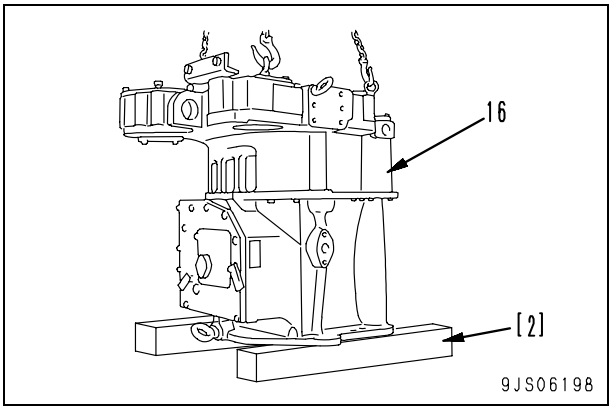

14. Remove block (18) with inside strainer.

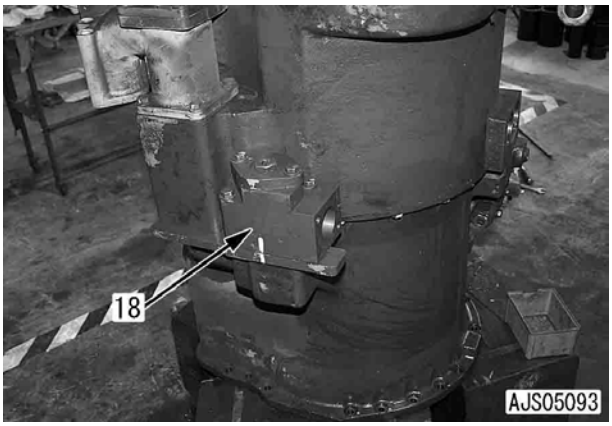

15. Remove cover (19), and remove spring (20) and magnet assembly (21).

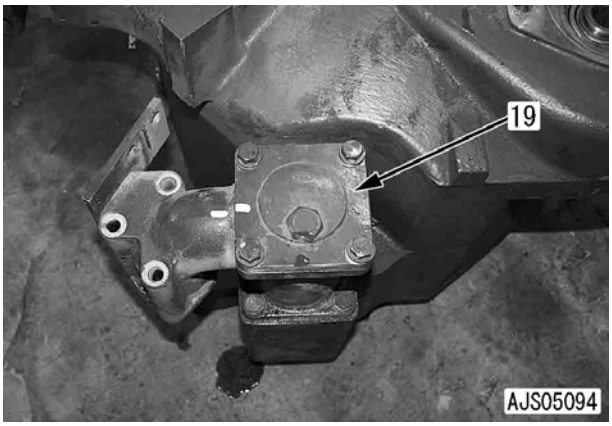

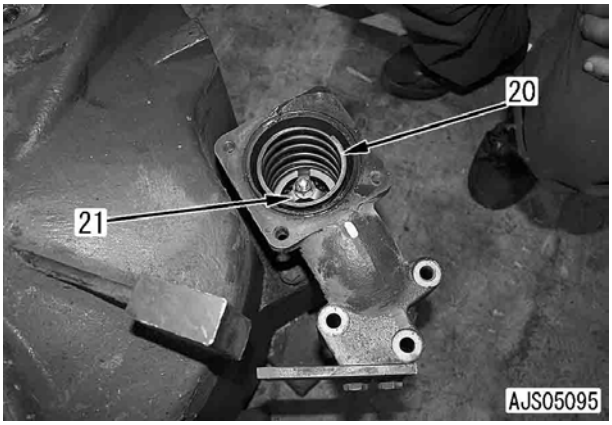

16. Remove pressure sensor block (22) and remove two sleeves (23).

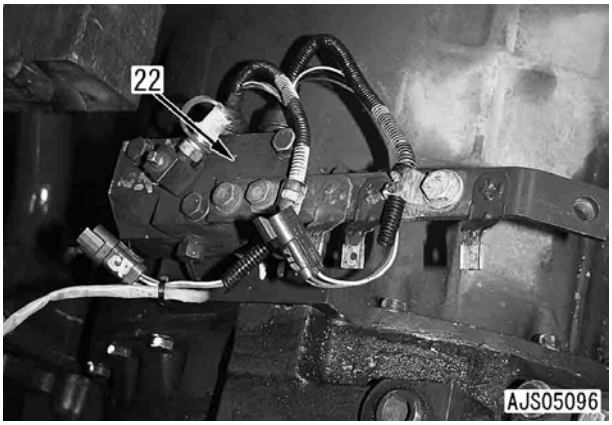

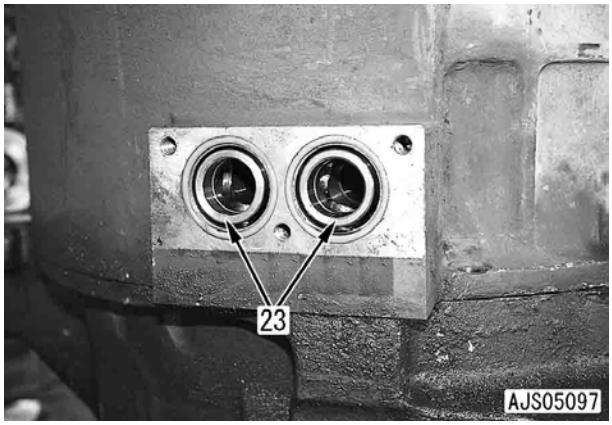

17. Remove cover (24).

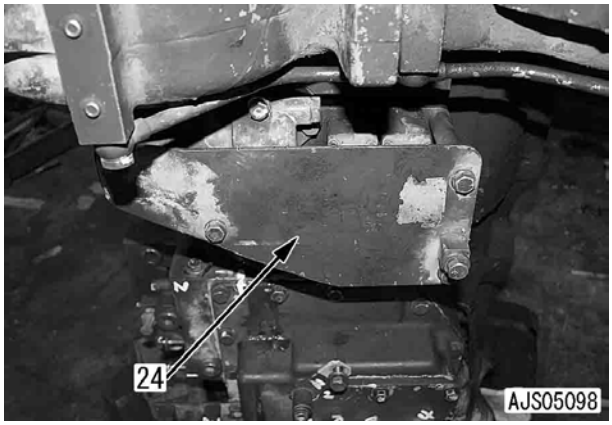

18. Remove torque converter valve assembly (25), and remove two sleeves (26).

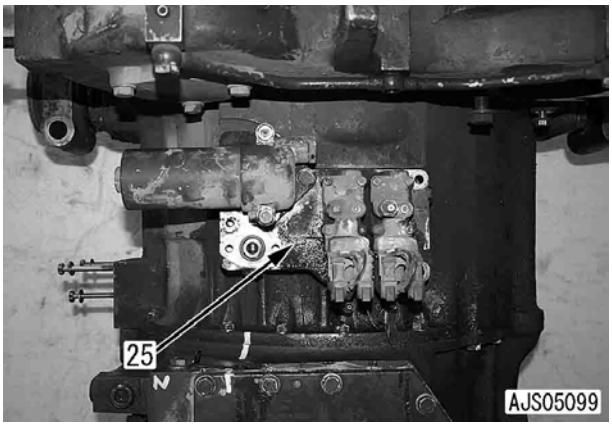

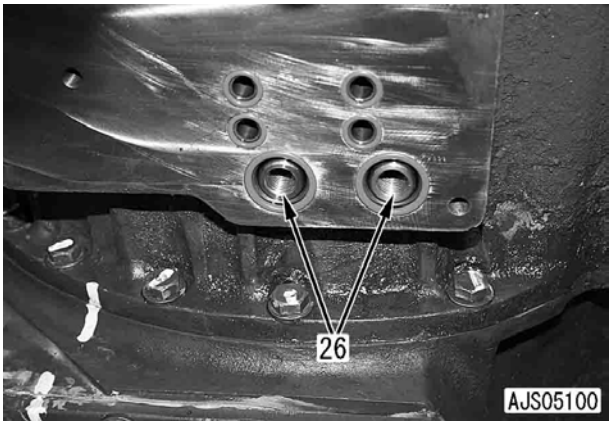

19. Remove 19 mounting bolts, and remove PTO assembly (27) by slinging it. [*3]

PTOAss'y: **200 kg**

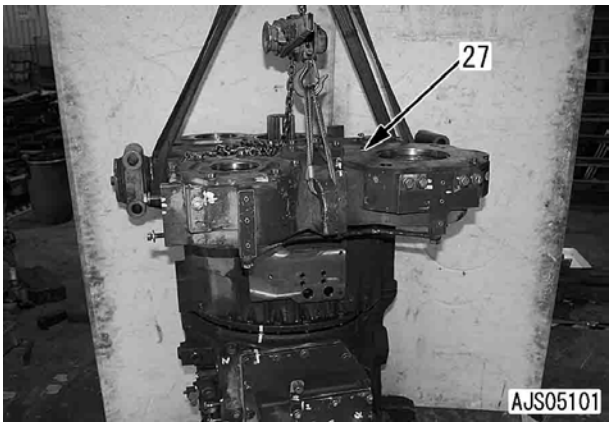

20. Sling torque converter assembly (28) and remove it.
    - ★ Remove only 10 mounting bolts marked with ★ in the figure (nominal length 90 mm). [*4]

Torque converter assembly: **130 kg**

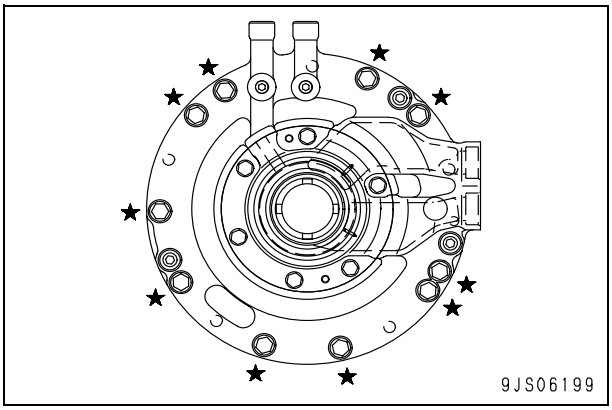

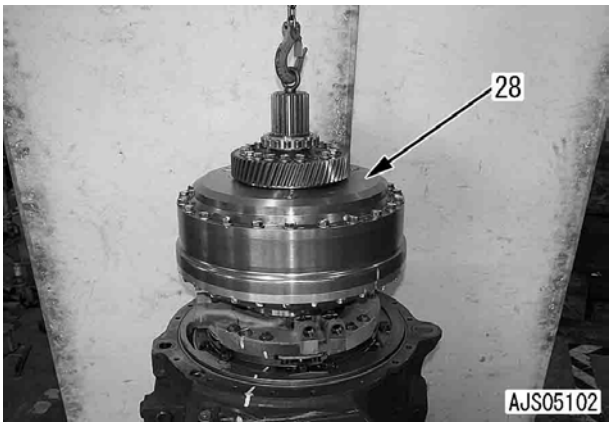

Connection

- Carry out connection in the reverse order of disconnection.

[*1]
★ Connect the pressure pick up hose to power train unit referring to the table which indicates the band color at the mouthpiece of pressure pick up hose.

Symbol	Pressure pick up point	Band color
a	Torque converter lockup clutch pressure	Yellow red
b	Torque converter stator clutch pressure	Yellow blue
c	Transmission 1st clutch pressure	Red
d	Transmission 3rd clutch pressure	Yellow black
e	Transmission R clutch pressure	Red blue
f	Transmission 2nd clutch pressure	White yellow
g	Transmission F clutch pressure	White blue
h	Transmission main relief pressure	No color
i	Left brake pressure	White
j	Right brake pressure	Yellow

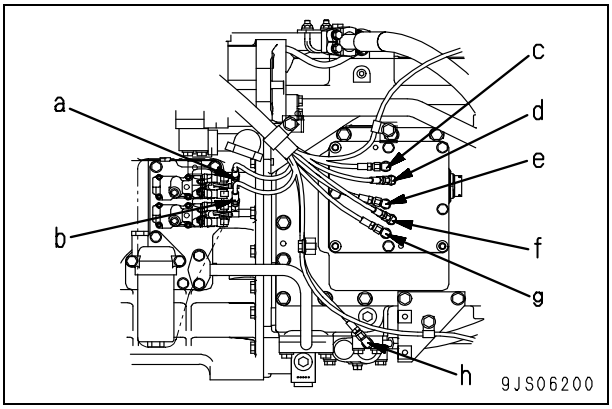

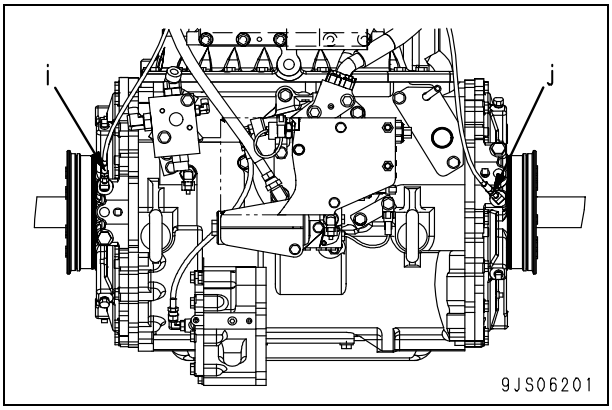

[*2]
Transmission case mounting bolt:
98.0 – 122.6 Nm {10.0 – 12.5 kgm}

[*3]
PTO assembly mounting bolts:
98.0 – 122.6 Nm {10.0 – 12.5 kgm}

[*4]
Torque converter assembly mounting bolts:
Liquid adhesive (LT-2)
Torque converter assembly mounting bolts:
98 – 122.5 Nm {10.0 – 12.5 kgm}

D155AX-6 Bulldozer

Form No. SEN01206-00

© 2006 KOMATSU
All Rights Reserved
Printed in Japan 05-06 (02)

BULLDOZER

D155AX-6

Machine model	Serial number
D155AX-6	80001 and up

90 Diagrams and drawings

Hydraulic circuit diagram

Hydraulic circuit diagram 3
Power train hydraulic circuit diagram 3
Hydraulic circuit diagram (1/2) 5
Hydraulic circuit diagram (2/2) 7

POWER TRAIN HYDRAULIC CIRCUIT DIAGRAM

POWER TRAIN HYDRAULIC CIRCUIT DIAGRAM
D155AX-6

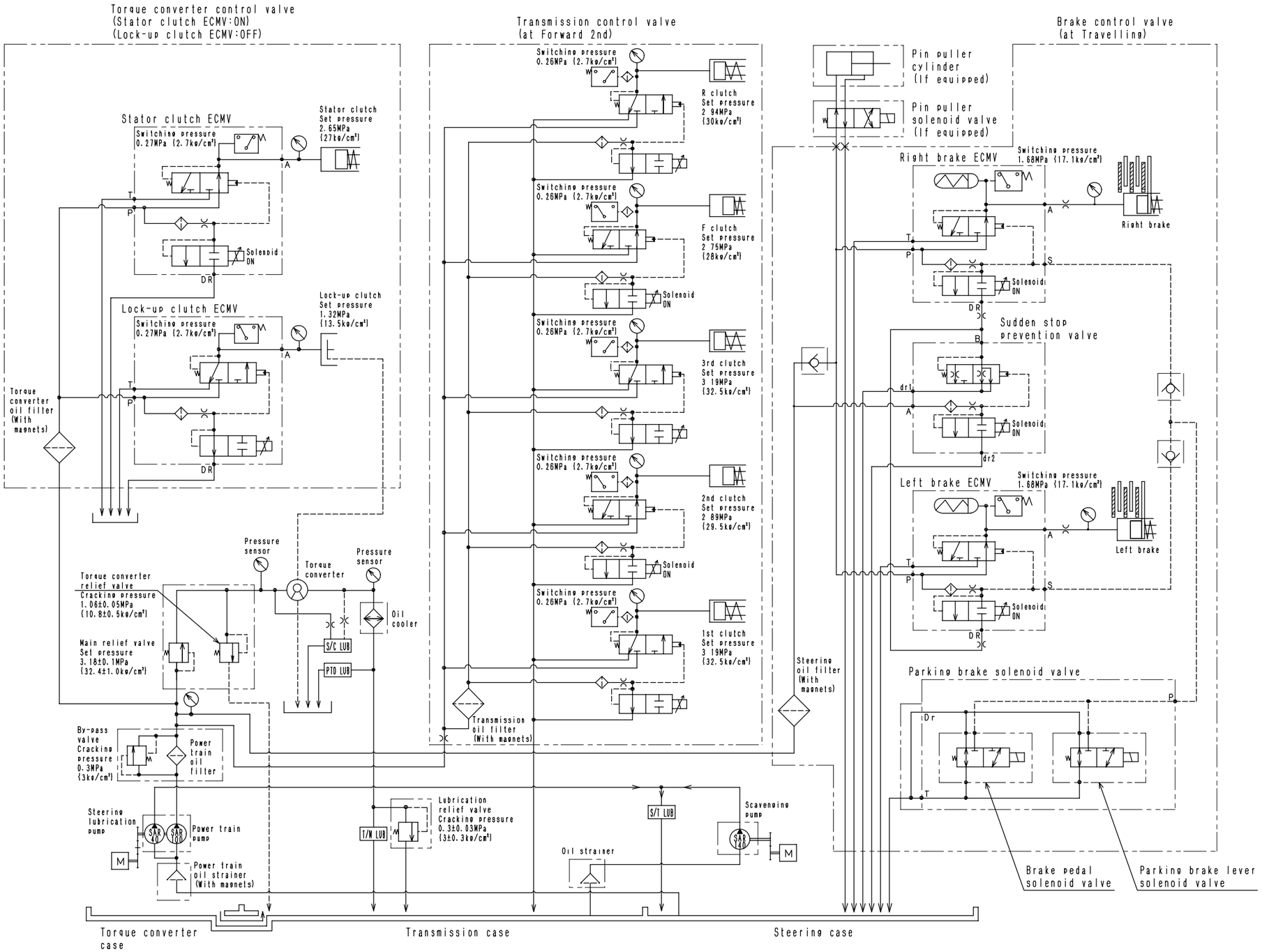

9JB03167

HYDRAULIC CIRCUIT DIAGRAM(1/2)
D155AX-6

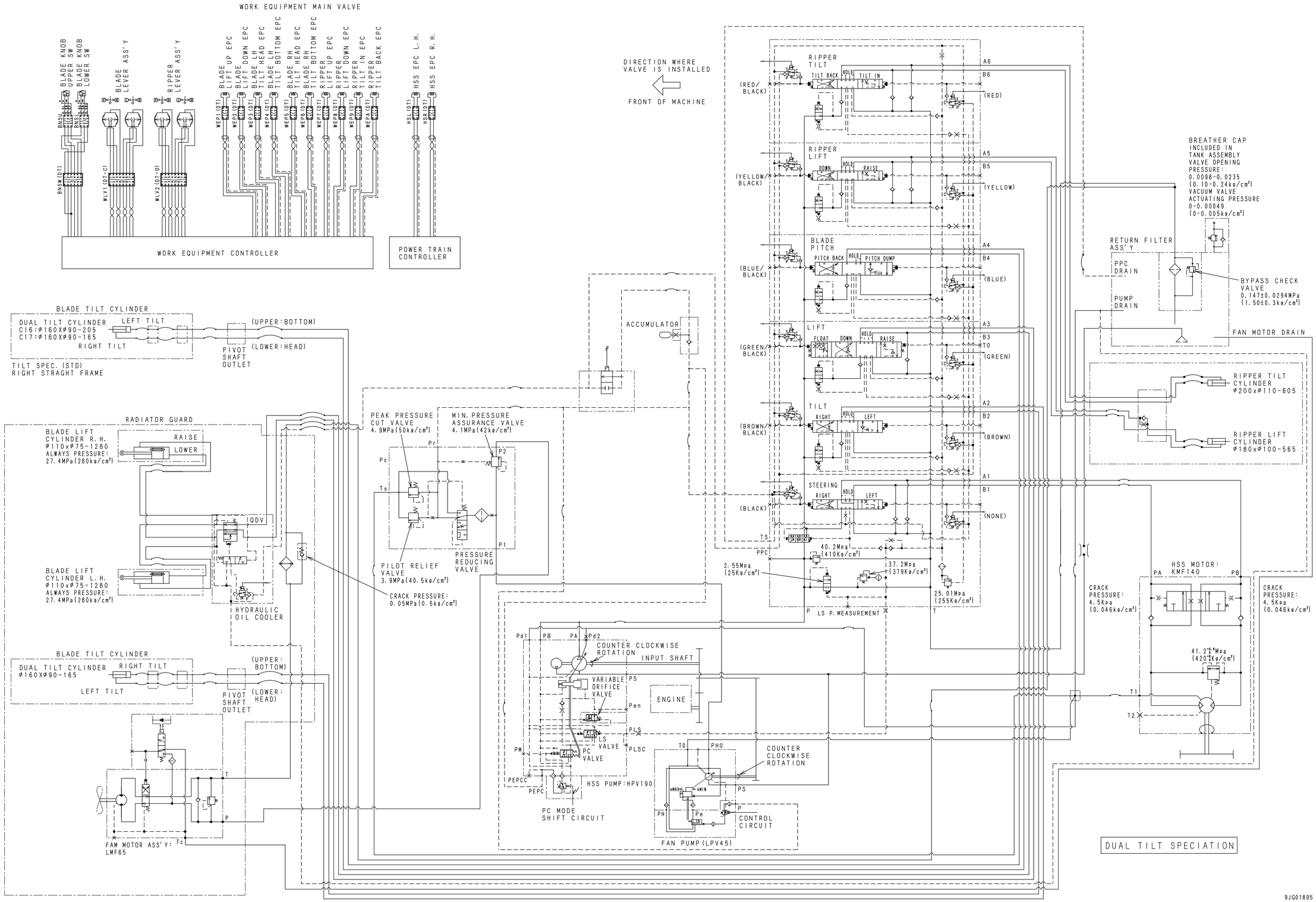

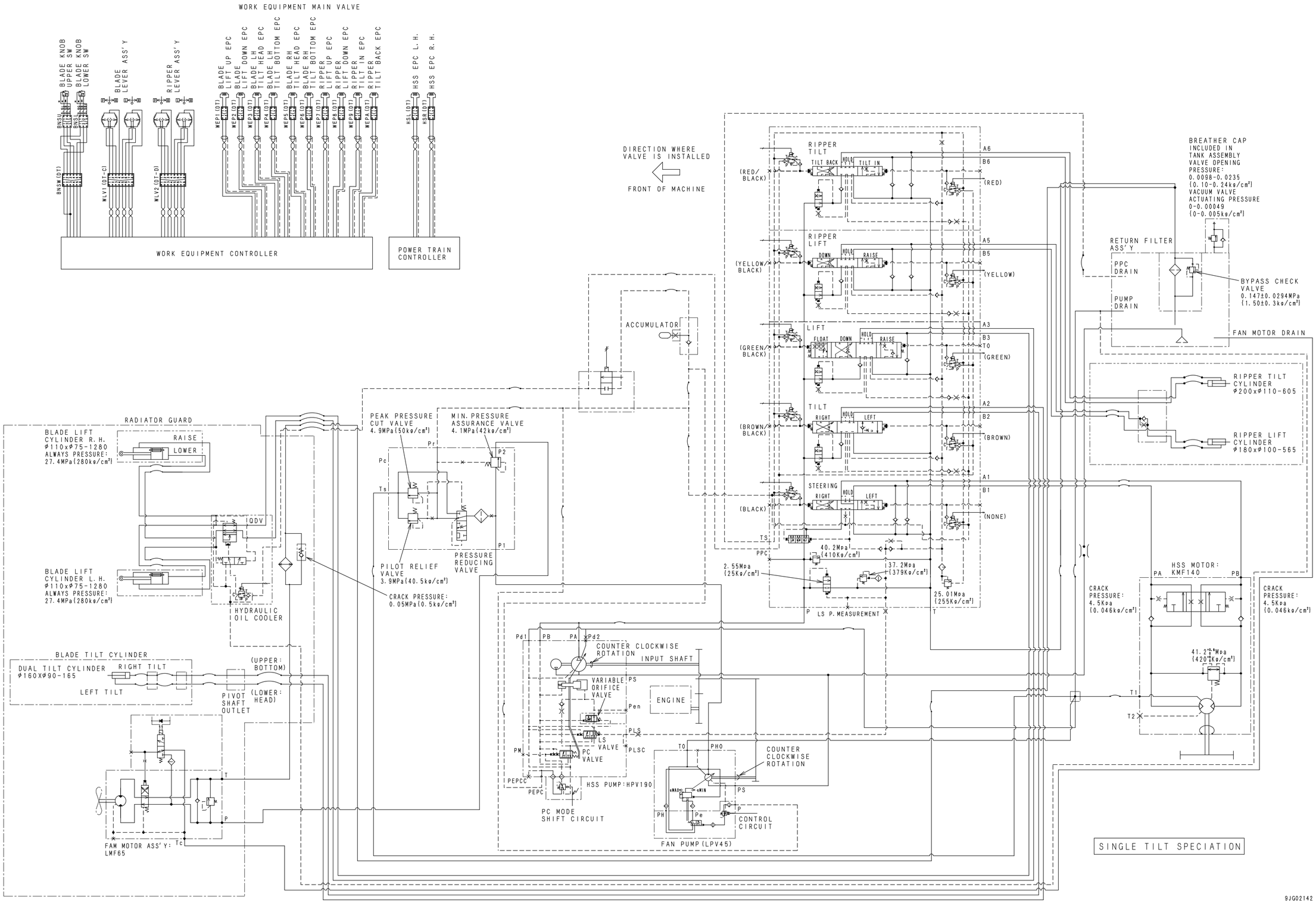
WORK EQUIPMENT MAIN VALVE
BLADE KNOB UPPER SW
BLADE KNOB LOWER SW
BLADE LEVER ASS'Y
RIPPER LEVER ASS'Y
BLADE LIFT UP EPC
BLADE LIFT DOWN EPC
BLADE TILT HEAD EPC
BLADE TILT BOTTOM EPC
BLADE RH TILT HEAD EPC
BLADE RH TILT BOTTOM EPC
RIPPER LIFT UP EPC
RIPPER LIFT DOWN EPC
RIPPER TILT IN EPC
RIPPER TILT BACK EPC
HSS EPC L.H.
HSS EPC R.H.
BNSW(OT)
WLV1(OT-C)
WLV2(OT-D)
WEP1(OT)
WEP2(OT)
WEP3(OT)
WEP4(OT)
WEP5(OT)
WEP6(OT)
WEP7(OT)
WEP8(OT)
WEP9(OT)
WEP10(OT)
WEP11(OT)
WEP12(OT)
HSL(OT)
HSS(OT)
WORK EQUIPMENT CONTROLLER
POWER TRAIN CONTROLLER
DIRECTION WHERE VALVE IS INSTALLED
FRONT OF MACHINE
RIPPER TILT
TILT BACK
TILT IN
HOLD
(RED/BLACK)
(RED)
RIPPER LIFT
DOWN
RAISE
(YELLOW/BLACK)
(YELLOW)
LIFT
FLOAT
(GREEN/BLACK)
(GREEN)
TILT
RIGHT
LEFT
(BROWN/BLACK)
(BROWN)
STEERING
(BLACK)
(NONE)
TS
PPC
40.2Mpa (410kg/cm²)
2.55Mpa (25kg/cm²)
37.2Mpa (379kg/cm²)
25.01Mpa (255kg/cm²)
LS P. MEASUREMENT
P
T
A6
B6
A5
B5
A3
B3
T0
A2
B2
A1
B1
BREATHER CAP INCLUDED IN TANK ASSEMBLY
VALVE OPENING PRESSURE: 0.0098-0.0235 {0.10-0.24kg/cm²}
VACUUM VALVE ACTUATING PRESSURE 0-0.00049 {0-0.005kg/cm²}
RETURN FILTER ASS'Y
PPC DRAIN
PUMP DRAIN
BYPASS CHECK VALVE 0.147±0.0294MPa {1.50±0.3kg/cm²}
FAN MOTOR DRAIN
RIPPER TILT CYLINDER φ200xφ110-605
RIPPER LIFT CYLINDER φ180xφ100-565
ACCUMULATOR
PEAK PRESSURE CUT VALVE 4.9MPa{50kg/cm²}
MIN. PRESSURE ASSURANCE VALVE 4.1MPa{42kg/cm²}
Pr
Pc
Ts
P2
P1
PRESSURE REDUCING VALVE
PILOT RELIEF VALVE 3.9MPa{40.5kg/cm²}
CRACK PRESSURE: 0.05MPa{0.5kg/cm²}
RADIATOR GUARD
BLADE LIFT CYLINDER R.H. φ110xφ75-1280 ALWAYS PRESSURE: 27.4MPa{280kg/cm²}
RAISE
LOWER
QDV
BLADE LIFT CYLINDER L.H. φ110xφ75-1280 ALWAYS PRESSURE: 27.4MPa{280kg/cm²}
HYDRAULIC OIL COOLER
BLADE TILT CYLINDER
DUAL TILT CYLINDER φ160Xφ90-165
RIGHT TILT
LEFT TILT
(UPPER: BOTTOM)
(LOWER: HEAD)
PIVOT SHAFT OUTLET
FAN MOTOR ASS'Y: LMF65
Tc
T
P
Pd1
PB
PA
Pd2
COUNTER CLOCKWISE ROTATION
INPUT SHAFT
VARIABLE ORIFICE VALVE
PS
Pen
ENGINE
PLS
LS VALVE
PLSC
PC VALVE
PM
PEPCC
PEPC
HSS PUMP:HPV190
PC MODE SHIFT CIRCUIT
TO
PHO
COUNTER CLOCKWISE ROTATION
qMAX
qMIN
PH
Pe
CONTROL CIRCUIT
FAN PUMP(LPV45)
HSS MOTOR: KMF140
CRACK PRESSURE: 4.5Kpa {0.046kg/cm²}
41.2+4.9 Mpa {420+50 Kg/cm²}
T1
T2
SINGLE TILT SPECIATION
9JG02142

D155AX-6 Bulldozer
Form No. SEN00616-01

© 2006 KOMATSU
All Rights Reserved
Printed in Japan 05-06 (02)

BULLDOZER

D155AX-6

Machine model	Serial number
D155AX-6	80001 and up

90 Diagrams and drawings

Electrical circuit diagram

Electrical circuit diagram 3
Electrical circuit diagram 3
Connectors table and arrangement drawing 5

CAB AND FLOOR

AIR CONDITIONER

ENGINE

TRANSMISSION

FRONT OF MACHINE

REAR OF MACHINE

R.H. SIDE OF MACHINE

L.H. SIDE OF MACHINE

COLOR CODE

Symbol	Color	Symbol	Color	Symbol	Color
W	White	Y	Yellow	P	Pink
B	Black	R	Red	Br	Brown
G	Green	L	Blue	Lg	Light Green
O	Orange	V	Violet	Sb	Sky Blue
GY	Gray	LY	Light Yellow	Gr	Dark Green
W-B	White & Black	L-W	Blue & White	Y-B	Yellow & Black
W-R	White & Red	L-R	Blue & Red	Y-G	Yellow & Green
W-G	White & Green	L-Y	Blue & Yellow	Y-R	Yellow & Red
W-L	White & Blue	L-G	Blue & Green	Y-W	Yellow & White
W-Y	White & Yellow	L-B	Blue & Black		

CONNECTOR LOCATION

CONNECTOR	ADDRESS	CONNECTOR	ADDRESS	CONNECTOR	ADDRESS
1	A-6	100	B-5	199	C-2
2	A-6	101	B-5	200	C-2
3	A-6	102	B-5	201	C-2
4	A-6	103	B-5	202	C-2
5	A-6	104	B-5	203	C-2
6	A-6	105	B-5	204	C-2
7	A-6	106	B-5	205	C-2
8	A-6	107	B-5	206	C-2
9	A-6	108	B-5	207	C-2
10	A-6	109	B-5	208	C-2
11	A-6	110	B-5	209	C-2
12	A-6	111	B-5	210	C-2
13	A-6	112	B-5	211	C-2
14	A-6	113	B-5	212	C-2
15	A-6	114	B-5	213	C-2
16	A-6	115	B-5	214	C-2
17	A-6	116	B-5	215	C-2
18	A-6	117	B-5	216	C-2
19	A-6	118	B-5	217	C-2
20	A-6	119	B-5	218	C-2
21	A-6	120	B-5	219	C-2
22	A-6	121	B-5	220	C-2
23	A-6	122	B-5	221	C-2
24	A-6	123	B-5	222	C-2
25	A-6	124	B-5	223	C-2
26	A-6	125	B-5	224	C-2
27	A-6	126	B-5	225	C-2
28	A-6	127	B-5	226	C-2
29	A-6	128	B-5	227	C-2
30	A-6	129	B-5	228	C-2
31	A-6	130	B-5	229	C-2
32	A-6	131	B-5	230	C-2
33	A-6	132	B-5	231	C-2
34	A-6	133	B-5	232	C-2
35	A-6	134	B-5	233	C-2
36	A-6	135	B-5	234	C-2
37	A-6	136	B-5	235	C-2
38	A-6	137	B-5	236	C-2
39	A-6	138	B-5	237	C-2
40	A-6	139	B-5	238	C-2
41	A-6	140	B-5	239	C-2
42	A-6	141	B-5	240	C-2
43	A-6	142	B-5	241	C-2
44	A-6	143	B-5	242	C-2
45	A-6	144	B-5	243	C-2
46	A-6	145	B-5	244	C-2
47	A-6	146	B-5	245	C-2
48	A-6	147	B-5	246	C-2
49	A-6	148	B-5	247	C-2
50	A-6	149	B-5	248	C-2
51	A-6	150	B-5	249	C-2
52	A-6	151	B-5	250	C-2
53	A-6	152	B-5	251	C-2
54	A-6	153	B-5	252	C-2
55	A-6	154	B-5	253	C-2
56	A-6	155	B-5	254	C-2
57	A-6	156	B-5	255	C-2
58	A-6	157	B-5	256	C-2
59	A-6	158	B-5	257	C-2
60	A-6	159	B-5	258	C-2
61	A-6	160	B-5	259	C-2
62	A-6	161	B-5	260	C-2
63	A-6	162	B-5	261	C-2
64	A-6	163	B-5	262	C-2
65	A-6	164	B-5	263	C-2
66	A-6	165	B-5	264	C-2
67	A-6	166	B-5	265	C-2
68	A-6	167	B-5	266	C-2
69	A-6	168	B-5	267	C-2
70	A-6	169	B-5	268	C-2
71	A-6	170	B-5	269	C-2
72	A-6	171	B-5	270	C-2
73	A-6	172	B-5	271	C-2
74	A-6	173	B-5	272	C-2
75	A-6	174	B-5	273	C-2
76	A-6	175	B-5	274	C-2
77	A-6	176	B-5	275	C-2
78	A-6	177	B-5	276	C-2
79	A-6	178	B-5	277	C-2
80	A-6	179	B-5	278	C-2
81	A-6	180	B-5	279	C-2
82	A-6	181	B-5	280	C-2
83	A-6	182	B-5	281	C-2
84	A-6	183	B-5	282	C-2
85	A-6	184	B-5	283	C-2
86	A-6	185	B-5	284	C-2
87	A-6	186	B-5	285	C-2
88	A-6	187	B-5	286	C-2
89	A-6	188	B-5	287	C-2
90	A-6	189	B-5	288	C-2
91	A-6	190	B-5	289	C-2
92	A-6	191	B-5	290	C-2
93	A-6	192	B-5	291	C-2
94	A-6	193	B-5	292	C-2
95	A-6	194	B-5	293	C-2
96	A-6	195	B-5	294	C-2
97	A-6	196	B-5	295	C-2
98	A-6	197	B-5	296	C-2
99	A-6	198	B-5	297	C-2

Connector No.	Type of connector	Number of pin	Location	Address
250	Terminal	1	Starting switch (Terminal B)	R-9
255	Terminal	1	Starting switch (Terminal R1)	R-8
256	Terminal	1	Starting switch (Terminal R2)	R-8
260	Terminal	1	Starting switch (Terminal BR)	R-8
270	Terminal	1	Starting switch (Terminal ACC)	R-9
280	Terminal	1	Starting switch (Terminal C)	R-9
A/C	DT	2	Air conditioner compressor	AE-1
A/C1	DT	2	Intermediate connnector	F-7, AG-8
AC01	YAZAKI	8	Intermediate connnector	K-8, AB-8
AC02	SUMITOMO4	4	Intermediate connnector	K-9, AB-7
AC03	Relay	5	Air conditioner blower relay	AB-5
AC04	Relay	4	Air conditioner compressor relay	AB-4
AC05	S090	2	Air conditioner gas pressure sensor	I-1
ACCN	040	36	Air conditioner controller	L-8
ACD1	DT	2	Diode	AB-2
ACD2	DT	2	Diode	AB-2
ACS	DT	2	Diode	AE-2
ACT	Relay	5	Engine ACC signal cut relay	D-8
AF1	DT	2	Air cleaner clogging switch (If equipped)	E-7
AL/B	Terminal	1	Alternator terminal B	AC-4
AL/R	Terminal	1	Alternator terminal R	AC-5
ASUS	DT	2	Service connector (for air suspension seat)	AA-8
AT11	—	1	Machine monitor	F-8
AT12	—	1	GPS antenna	I-9
AT21	—	1	KOMTRAX communication module	H-8
AT22	—	1	ORBCOMM antenna	I-9
AUX0	—	1		K-2
B30L	Terminal	1	Circuit breaker (30A)	L-2
B30S	Terminal	1	Circuit breaker (30A)	L-2
B105HL	Terminal	1	Circuit breaker (105A)	M-3
B105HS	Terminal	1	Circuit breaker (105A)	M-3
B105L	Terminal	1	Circuit breaker (105A)	M-3
B105S	Terminal	1	Circuit breaker (105A)	M-2
BKA	Relay	5	Backup alarm relay	A-8
BKAL	DT	2	Backup alarm	M-5
BKSW	DT	3	Brake pedal switch	P-6
BNSL	—	3	Blade float switch	T-7
BNSU	—	3	Blade pitch switch	T-7
BNSW	DT	6	Blade control lever (knob switch)	V-9
BP	DT	2	Bypass valve solenoid	AD-6
BRB	Terminal	1	Battery relay (Contact input terminal)	N-3
BRC	Terminal	3	Battery relay (Contact output terminal)	M-3
BRE	Terminal	1	Battery relay (Coil ground terminal)	N-1
BRK	DT	3	Brake pedal potentiometer	P-6
BVRV	DT	2	Transmission bevel speed sensor	AN-7
CA1	DT	3	CAN terminal resistance	AH-3
CB1	—	1	Circuit breaker (20A)	C-6
CB2	—	1	Circuit breaker (20A)	C-6
CB3	—	1	Circuit breaker (20A)	C-6
CB4	—	1	Circuit breaker (20A)	B-6
CB5	—	1	Circuit breaker (20A)	B-6
CB6	—	1	Circuit breaker (20A)	B-6
CB7	—	1	Circuit breaker (20A)	B-6
CB8	—	1	Circuit breaker (20A)	A-6
CB9	—	1	Circuit breaker (20A)	D-6
CB30	—	2	Circuit breaker (30A)	L-2
CB105	—	2	Circuit breaker (105A)	M-3
CB105H	—	2	Circuit breaker (105A)	M-3
CBPW	DTP	4	Intermediate connnector	X-9
CK01	070	14		Z-9
CK02	070	10		Y-9
CM01	070	18	Machine monitor	R-6
CM02	070	12	Machine monitor	R-5
CM03	070	18	Machine monitor	R-5
CM04	070	12	Machine monitor	—
CM05	070	8	Machine monitor	—
CN1	DT	2	Injecter #1	AC-4
CN2	DT	2	Injecter #2	AC-5
CN3	DT	2	Injecter #3	AD-7
CN4	DT	2	Injecter #4	AE-7
CN5	DT	2	Injecter #5	AE-7
CN6	DT	2	Injecter #6	AH-7
DCL	DT	3	Decelerator pedal potentiometer	P-6
DIAL	M	3	Fuel control dial	AB-8
DSH	DRC-70A	70	Intermediate connector	P-2, V-1
E22	DT	6	Intermediate connector	AG-2
EG1	DTP	2	Intermediate connector	H-1, AH-5
EG2	DT-B	12	Intermediate connector	H-1, AH-5
EGC1	DRC-60	60	Engine controller	AH-4
EGC2	DRC-50	50	Engine controller	AH-4
EGC3	DTP	4	Engine controller	AG-3
EGPW	DTP	2	Intermediate connector	L-3
EGR	DT	2	EGR valve solenoid	AC-5
EHL	—	5	Engine hold relay	D-9
ESD	DT	3	Service connector (for engine option)	U-2
F105	DTHD	1	Intermediate connector	K-2
F1T	DT	2	Transmission 1st clutch ECMV (Fill switch)	AL-9
F2T	DT	2	Transmission 2nd clutch ECMV (Fill switch)	AK-8
F3T	DT	2	Transmission 3rd clutch ECMV (Fill switch)	AK-8
F30	DTHD	1	Intermediate connector	L-3
FAC	DT	2	Fan pump control valve	AI-3
FAR	DT	2	Fan reverse solenoid valve	C-1
FBRL	DT	2	Left brake ECMV (Fill switch)	AL-7
FBRR	DT	2	Right brake ECMV (Fill switch)	AM-7
FD1	24-31	31	Intermediate connector	K-2, AB-4
FD2	DT-C	12	Intermediate connector	L-3
FD3	DT	6	Intermediate connector	M-3
FD4	24-31	31	Intermediate connector	J-2, AB-3
FFT	DT	2	Transmission F clutch ECMV (Fill switch)	AM-9
FLSW	SWP	6	Headlamp switch	P-5
FLUC	DT	2	Torque converter lockup clutch ECMV (Fill switch)	AJ-1
FLV	DT	2	Fuel level sensor	M-4
FRT	DT	2	Transmission R clutch ECMV (Fill switch)	AL-9
FS11	—	5	Fuse box	A-8
FS12	—	5	Fuse box	A-8
FS21	—	5	Fuse box	A-7
FS22	—	5	Fuse box	A-7
FSB	24-21	21	Intermediate connector	B-9, AB-4
FSTC	DT	2	Torque converter stator clutch ECMV (Fill switch)	AK-1
FTK	DT	12	Intermediate connector	M-7
G	SUMITOMO	3	Engine Bkup speed sensor	AD-2
GND	Terminal	1	Ground (ROPS)	M-3
GND03	Terminal	6	Ground (ROPS)	M-5
GND06	Terminal	4	Ground (Fender)	J-1
GND07	Terminal	1	Ground (Bulkhead)	G-1
GND08	Terminal	4	Ground (Guard) [Additional headlamp specification]	—
GND09	Terminal	1	Ground (Engine)	AE-2
GND11	Terminal	6	Ground (Floor)	AB-6
GND12	Terminal	6	Ground (Floor)	AB-6
GND20	Terminal	2	Ground (Engine)	AF-2
HDT	DT	2	Hydraulic oil temperature sensor	AI-2

Connector No.	Type of connector	Number of pin	Location	Address
HHP	DT	3	Work equipment and HSS pump pressure sensor	AI-4
HNSW	DT	2	Horn switch	V-9
HRN	—	1	Horn	C-2
HSL	DT	2	HSS left EPC valve	U-9
HSR	DT	2	HSS right EPC valve	T-8
HSS	DT	6	Intermediate connector	U-9, AJ-8
HT	Terminal	2	Heater relay (Terminal C)	A-5
HT/A	Terminal	1	Heater relay (Terminal A)	B-5
HT/B	Terminal	1	Heater relay (Terminal B)	A-4
HTD	DT	2	Diode	H-1
J1939	DT	3	Service connector	AF-8
JM01	—	6	Junction wiring harness	AH-4
JM02	—	7	Junction wiring harness	AH-3
JM03	—	4	Junction wiring harness	AH-3
JM04	—	3	Junction wiring harness	AG-2
JM05	—	3	Junction wiring harness	AH-5
JM06	—	3	Junction wiring harness	AH-5
JM07	—	5	Junction wiring harness	AF-8
JM08	—	7	Junction wiring harness	AG-8
KEY	DT	6	Starting switch	R-6
LHD	DT	2	Intermediate connector	C-3
LHDL	DT	2	Left headlamp	C-3
LHDL1	DT	2	Additional left headlamp [Additional headlamp specification]	—
LHDL2	DT	2	Additional left headlamp [Additional headlamp specification]	—
LHDR	DT	2	Right headlamp	C-4
LHDR1	DT	2	Additional right headlamp [Additional headlamp specification]	—
LHDR2	DT	2	Additional right headlamp [Additional headlamp specification]	—
LMD1	DT	2	Diode	G-8
LMD2	DT	2	Diode	G-8
LMFL	Relay	5	Left headlamp relay	C-9
LMFR	Relay	5	Right headlamp relay	C-9
LMRE	Relay	5	Rear lamp relay	A-9
LMRP	Relay	5	Ripper lamp relay	D-7
LREL	DT	2	Left rear lamp	M-7
LRER	DT	2	Right rear lamp	I-9
LRP1	DT	2	Ripper lamp	M-6
LRP2	DT	3	Intermediate connector	M-4
NE	FRAMATONE	3	Engine Ne speed sensor	AH-4
NSF	Relay	5	Neutral safety relay	C-9
OPPW	DT	2	Intermediate connector	V-1
PAMB	FRAMATONE	4	Ambient pressure sensor	AH-3
PBD	DT	2	Diode	AB-6
PBS	DT	2	Pedal brake solenoid	AL-7
PCV1	SUMITOMO	2	Supply pump #1	AD-2
PCV2	SUMITOMO	2	Supply pump #2	AD-2
PEVA	CANNON	4	EGR inlet pressure sensor	AC-6
PFUEL	AMP	3	Common rail pressure sensor	AF-2
PHR	Relay	5	Preheat relay	B-9
PIM	CANNON	4	Charge pressure sensor	AH-6
PKD	DT	2	Diode	AB-6
PKS	DT	2	Parking brake solenoid	AL-7
PKSW	DT	3	Parking brake lever switch	L-8, AB-5
PL1	DRC-70A	70	Intermediate connector	AB-4, AN-6
PLSW	DT	2	Pin puller switch	W-9
POIL	CANNON	4	Engine oil pressure sensor	AG-2
PPL	DT	2	Pin puller solenoid valve	M-4
PRE	DT	2	Pre-lubrication connector	W-1
PRT	DT-A	12	Intermediate connector	E-7
PT1	DT	3	Pitch angle sensor	D-6
PUMP	DT-A	12	Intermediate connector	T-7, AI-8
QDP	DT	2	Blade quick drop solenoid valve	C-2
RDG	DT-A	12	Intermediate connector	C-5
RES	DT	2	Service connector	AG-7
RHT	Terminal	1	Intake air heater (Electrical intake air heater)	AC-6
RLSW	SWP	6	Rear lamp switch	P-4
RSD	DT	2	Diode	AA-1
S1T	DT	2	Transmission 1st clutch ECMV (Solenoid)	AK-9
S2T	DT	2	Transmission 2nd clutch ECMV (Solenoid)	AK-8
S3T	DT	2	Transmission 3rd clutch ECMV (Solenoid)	AK-8
SBP	DT	4	Bypass valve lift sensor	AD-6
SBRL	DT	2	Left brake ECMV (Solenoid)	AM-7
SBRR	DT	2	Right brake ECMV (Solenoid)	AM-7
SEGR	DT	4	EGR valve lift sensor	AC-3
SFT	DT	2	Transmission F clutch ECMV (Solenoid)	AL-7
SFTD	—	3	Shift-down switch	X-1
SFTU	—	3	Shift-up switch	Y-1
SLS	050	2	Daylight sensor	P-7
SLUC	DT	2	Torque converter lockup clutch ECMV (Solenoid)	AK-1
SRT	DT	2	Transmission R clutch ECMV (Solenoid)	AK-8
SRV	DT-A	12	Service connector (for CAN communication)	V-1
SSP	DT	2	Sudden stop prevent valve	AN-2
SSTC	DT	2	Torque converter stator clutch ECMV (Solenoid)	AK-1
ST	DT	2	Starting motor (Terminal R, S)	AC-3
ST/B	Terminal	1	Starting motor (Terminal B)	AD-7
STC1	DRC26-24	24	Power train controller	Z-1
STC2	DRC26-40A	40	Power train controller	Z-1
STC3	DRC26-40B	40	Power train controller	AA-1
SW	Terminal	1	Battery relay (Coil signal terminal)	N-1
TCT	DT	2	Torque converter oil temperature sensor	AM-2
TFUEL	PACKARD	2	Fuel temperature sensor	AH-7
TIM	PACKARD	2	Charge temperature sensor	AH-6
TIP	DT	3	Torque converter inlet pressure sensor	AM-2
TLV1	DT-B	8	Steering/directional/gearshift lever (Potentiometer)	Y-1
TLV2	DT	6	Steering/directional/gearshift lever (Shift switch)	Y-1
TMV	24-23	23	Intermediate connector	AN-3
TOP	DT	3	Torque converter outlet pressure sensor	AM-2
TVC	DT	2	Work equipment and HSS pump TVC valve	AI-3
TWTR	PACKARD	2	Engine coolant temperature sensor	AF-8
WEC1	DRC26-24	24	Work equipment controller	T-2
WEC2	DRC26-40A	40	Work equipment controller	T-3
WEC3	DRC26-40B	40	Work equipment controller	T-5
WELK	DT	3	Work equipment lock lever switch	W-9
WEP1	DT	2	Blade lift raise EPC valve	T-9
WEP2	DT	2	Blade lift lower EPC valve	T-9
WEP3	DT	2	Blade left tilt head EPC valve	T-9
WEP4	DT	2	Blade left tilt bottom EPC valve	T-9
WEP5	DT	2	Blade right tilt head EPC valve	U-9
WEP6	DT	2	Blade right tilt bottom EPC valve	T-8
WEP7	DT	2	Ripper lift raise EPC valve	U-9
WEP8	DT	2	Ripper lift lower EPC valve	T-8
WEP9	DT	2	Ripper tilt in EPC valve	U-9
WEPA	DT	2	Ripper tilt back EPC valve	T-8
WEPW	DT	2	Service connector (Power supply for driving work equipment in emergency)	T-8
WESL	DRC-40A	40	Intermediate connector	T-6
WLK	DT	2	Work equipment lock solenoid valve	AJ-6
WLV	DT	2	Radiator coolant level sensor	C-2
WLV1	DT-B	8	Blade control lever (Potentiometer)	T-6
WLV2	DT-B	8	Ripper control lever	V-9
WSH	DT	4	Intermediate connector	X-9
WSH1	DT	6	Window washer tank (Front, left)	J-2
WSH2	DT	6	Window washer tank (Rear, right)	I-1

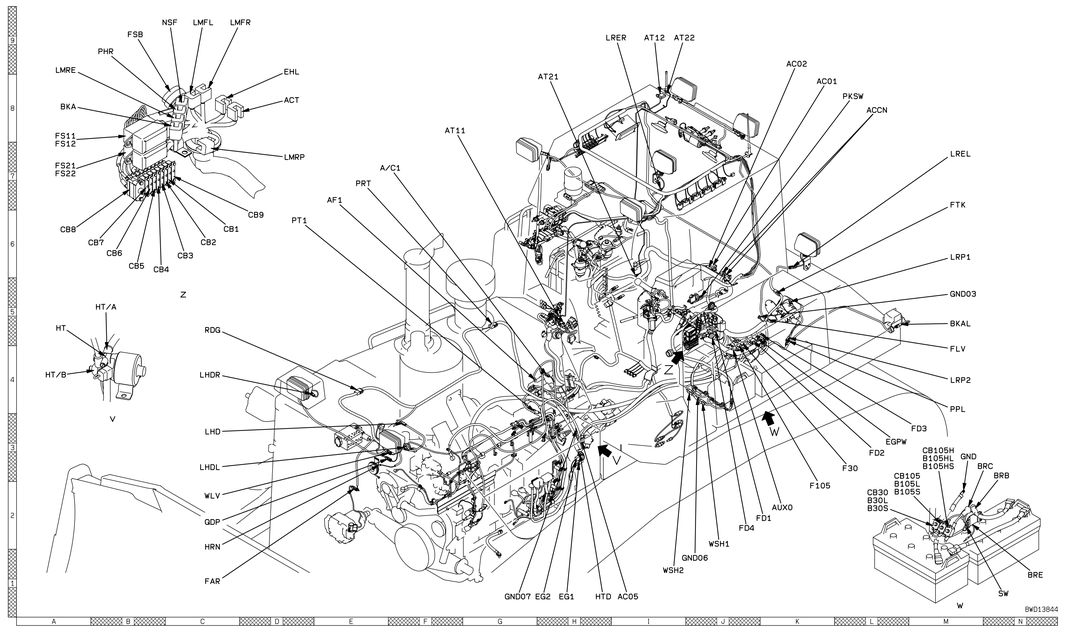

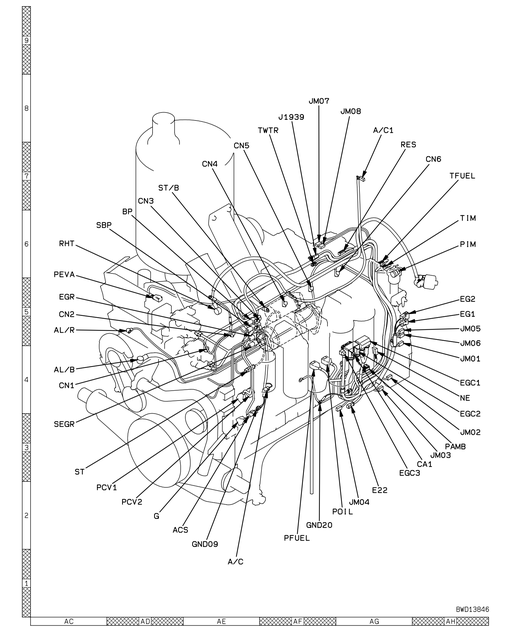

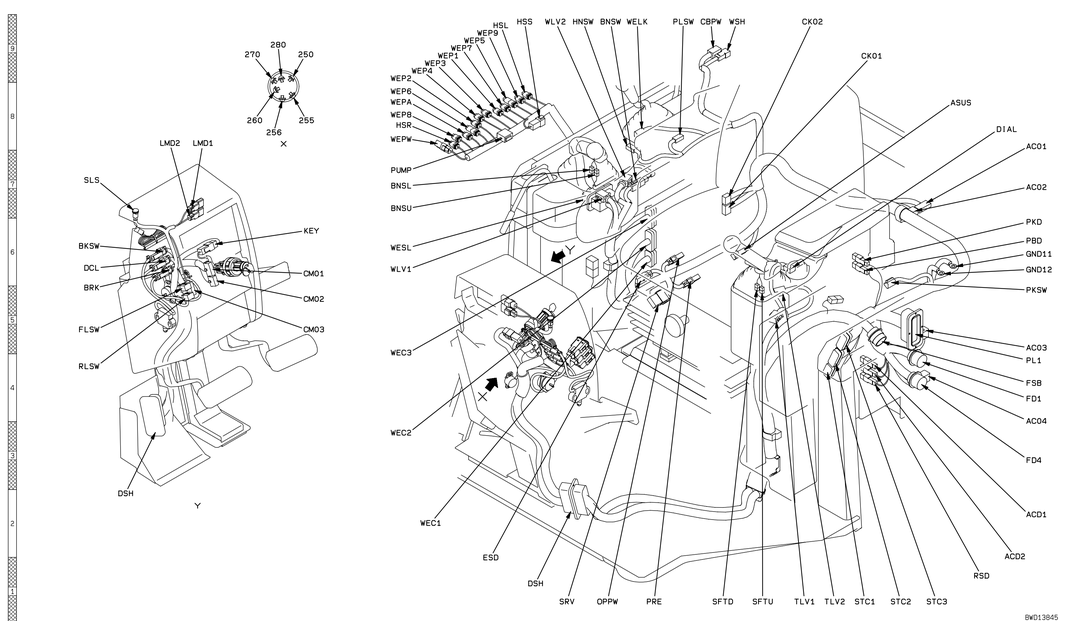

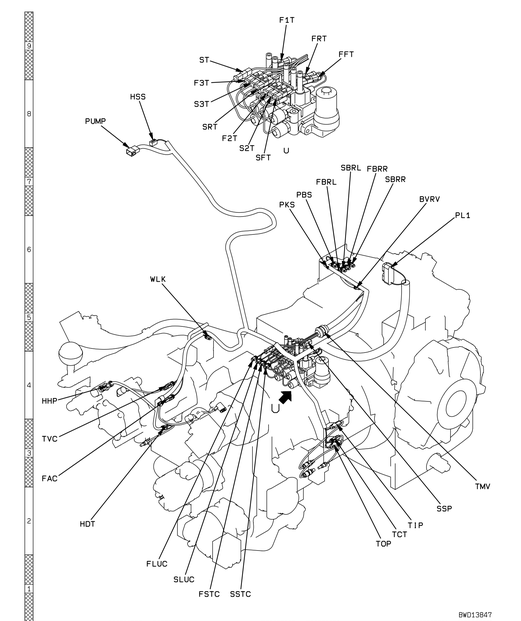

D155AX-6 Bulldozer
Form No. SEN00617-02

© 2006 KOMATSU
All Rights Reserved
Printed in Japan 05-06 (02)