Electrical System

Edition 1

Table of Contents

Electrical System

SAFETY PRECAUTIONS

CAUTION!

Follow all safety recommendations and safe shop practices outlined in the front of this manual or those contained within this section.

Always use tools and equipment that are in good working order.

Use lifting and hoisting equipment capable of safely handling load.

Remember, that ultimately safety is your own personal responsibility.

APPLICABLE MODELS

The contents of this section apply to the following models and serial number ranges.

MODEL	SERIAL NUMBER RANGE
DX225LCA	5167 and Up

INTRODUCTION

The electrical system for this equipment is DC 24 volts. The rated voltage for all electric components is 24 volts with the exception of the stereo and the air-conditioning control actuator. The system contains two 12 volt batteries connected in series and a three phase AC generator with a rectifier. The electric wiring used in the system is easily identifiable by the insulator color. The color symbols used in the electrical system are listed in the following chart.

Electric Wire Color

Symbol	Color
W	White
G	Green
Or	Orange
B	Black
L	Blue
Lg	Light green
R	Red
Gr	Gray
P	Pink
Y	Yellow
Br	Brown
V	Violet

NOTE: *RW: Red wire with White stripe*

R - Base Color, W - Stripe Color

NOTE: *0.85G: Nominal sectional area of wire core less insulator = 0.85 mm^2*

ELECTRICAL SUPPLY SYSTEM

The electric power circuit supplies electric current to each electric component. It consists of a battery, battery relay, starter switch, circuit breaker, fusible link and fuse box.

The negative terminal of the battery is grounded to the vehicle body.

Even when the starter switch (5) is in the "OFF" position, electric current is supplied to the following components through battery (1) → fusible link (3) → fuse box (6).

1. Terminal "1" of DC-DC converter (for memory backup of stereo)
2. Terminal "B" of starter switch
3. Hour meter
4. Engine controller
5. Fuel feeder pump switch
6. Terminal "6" of wiper motor
7. Terminal "13" of wiper controller
8. Terminal "CN6-11" of instrument panel
9. Terminal "CN9-6" of air conditioner panel
10. Cabin light

When the starter switch (5) is in the "ON or START" positions, the current flows from the battery (1) → fusible link (3) → fuse box (6) → "B" terminal of starter switch (5) → "BR" terminal of starter switch (5) → "BR" terminal of battery relay (2) which activates the coil of the battery relay and the electric supply system is energized.

When the battery relay's contacts are connected, all electric devices can be operated.

While the engine is not running, the electric power for all electric devices are supplied by the battery. Once the engine is started the power is supplied from the alternator (7).

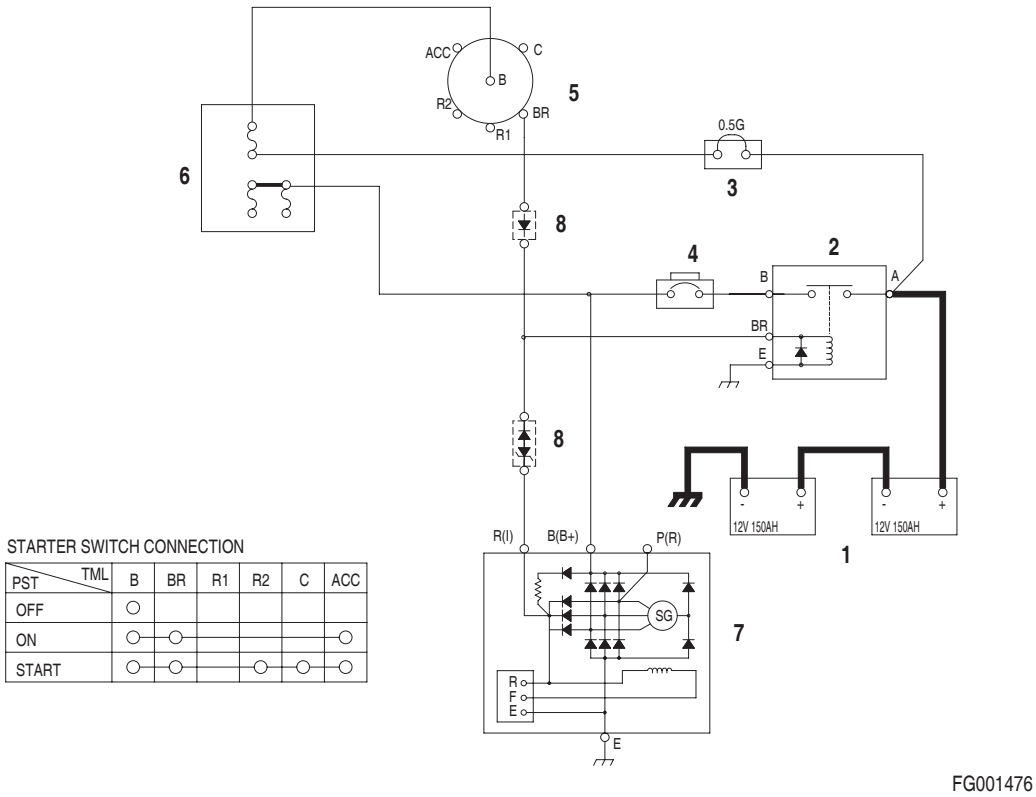

STARTER SWITCH CONNECTION

PST \ TML	B	BR	R1	R2	C	ACC
OFF	○					
ON	○	○				○
START	○	○		○	○	○

Figure 1 ELECTRIC POWER CIRCUIT DIAGRAM

Reference Number	Description
1	Battery
2	Battery Relay
3	Fusible Link
4	Circuit Breaker

Reference Number	Description
5	Starter Switch
6	Fuse Box
7	Alternator
8	Diode

ENGINE STARTING CIRCUIT

Start Operation

When the starter switch is turned to the "START" position, the "S" and "E" terminals of the starter controller (7) are connected. At this time the contacts in the starter relay (8) are closed by the current flow from the battery (1) → fusible link (3) → fuse box (6) → "B" terminal of starter switch (5) → "C" terminal of starter switch (5) → "30" terminal of starter relay (12) - "87a" terminal → "C" terminal of starter relay (8) - "D" terminal → "S" terminal of starter controller (7) - "E" terminal → ground.

When the contact point "B" and "PP" of starter relay (8) are connected, the pinion gear of the starter (9) is pushed forward and makes contact with the ring gear of the flywheel and the internal contacts of the starter are connected. The current flows from the battery (1) → "A" terminal of the battery relay (2) → "B" terminal of the battery relay (2, Figure 3) → "B" terminal of the starter (9). The starter motor is rotated and the engine is started.

If the instrument panel has the password function activated , input number should match the set number, otherwise the start circuit closes and the engine does not start.

NOTE: *If the security system is "LOCKED," a four-digit password will be required to start the engine. If the system is "UNLOCKED," no password will be required and this display screen will not appear.*

In the event the security system is locked, current flows from battery (1) → fusible link (3) → fuse box (6) → "B" terminal of starter switch (5) → "ACC" terminal of starter switch (5) → "86" terminal of starter relay (12) → "85" terminal of starter relay (12) → "CN1-15" terminal of e-EPOS (13) → ground. This current flow causes the coil in starter relay (12) to be activated, opening contacts at "87a" terminal. This prevents starter relay (8) from functioning.

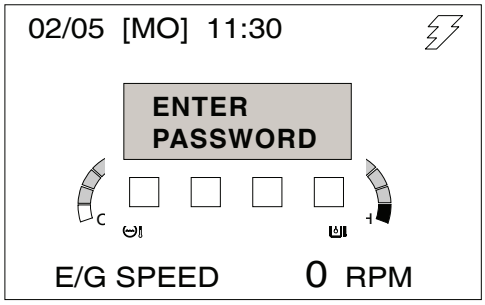

FG001445

Figure 2

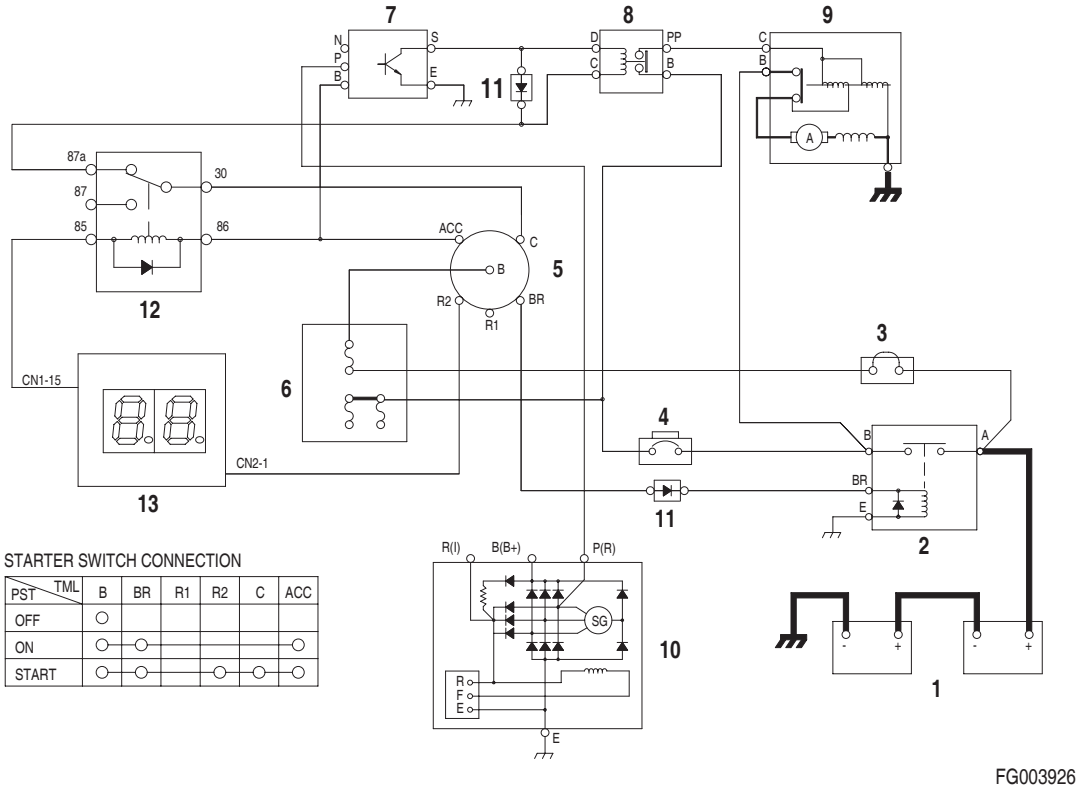

STARTER SWITCH CONNECTION

PST \ TML	B	BR	R1	R2	C	ACC
OFF	○					
ON	○	○				○
START	○	○		○	○	○

Figure 3 STARTER CIRCUIT (1) - WHILE STARTING

Reference Number	Description
1	Battery
2	Battery Relay
3	Fusible Link
4	Circuit Breaker
5	Starter Switch
6	Fuse Box
7	Starter Controller

Reference Number	Description
8	Starter Relay
9	Starter
10	Alternator
11	Diode
12	Starter Relay 2
13	e-EPOS Controller

After Start

Once the engine has been started, the belt driven alternator (10) generates a current.

The output generated by the alternator (10) is a square wave pulse voltage through the "P" terminal and the frequency of the pulse voltage is proportional to the rotation of the alternator.

The starter controller (7) monitors the frequency of the output current. Once the frequency is equivalent to 500 rpm, it is sensed and the connection between "S" and "E" terminals and the connection between "B" and "PP" terminals are opened. As a result the rotation of the starter (9) is stopped. Once the engine is running, the starter (9) will not operate even if the starter switch (5) is moved to the start position, preventing possible damage to the starter.

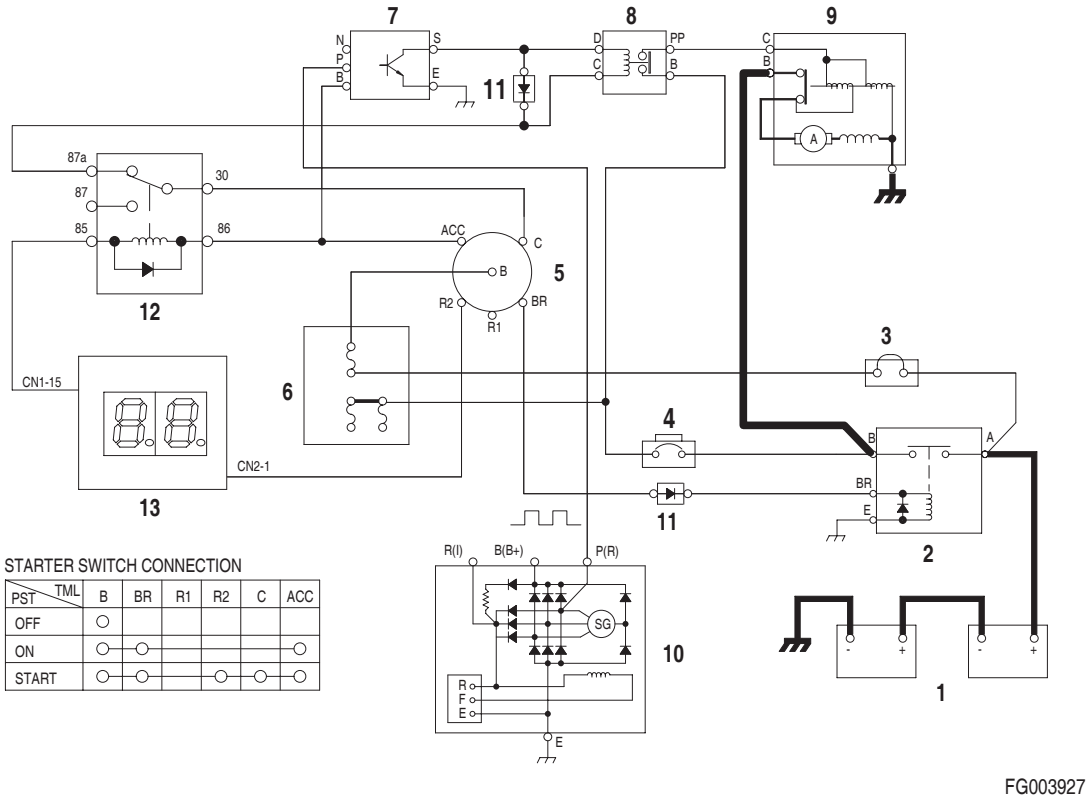

STARTER SWITCH CONNECTION

PST \ TML	B	BR	R1	R2	C	ACC
OFF	○					
ON	○	○				○
START	○	○		○	○	○

Figure 4 OPERATION OF START CIRCUIT (2) - IMMEDIATELY AFTER START

Reference Number	Description
1	Battery
2	Battery Relay
3	Fusible Link
4	Circuit Breaker
5	Starter Switch
6	Fuse Box
7	Starter Controller

Reference Number	Description
8	Starter Relay
9	Starter
10	Alternator
11	Diode
12	Starter Relay 2
13	e-EPOS Controller

ENGINE PREHEATING SYSTEM

An air heater (8) is installed in the intake manifold of the engine. When the starter switch (5) is turned "PREHEAT" the current flows from the battery (1) → fusible link (3) → "B" terminal of starter switch (5) → "R1" terminal of starter switch (5) → "C" terminal of preheat relay (7) → battery (1). This current flow causes the coil in preheat relay (7) to be activated, closing contact.

When the contacts of the preheat relay (7) are closed, the heating coils of the air heating device are heated by current flowing from the battery (1) → battery relay (2) → preheat relay (7) → air heater (8) → ground.

The duration of the heating time is approximately 20 seconds. After 20 seconds later to start preheating, the preheat indicator light will turn "OFF" by the timer in the e-EPOS controller.

If the starter switch (5) turns "START", the heating process will be going on because the current flows into the coil in preheat relay (7) through "R2" terminal of starter switch (5).

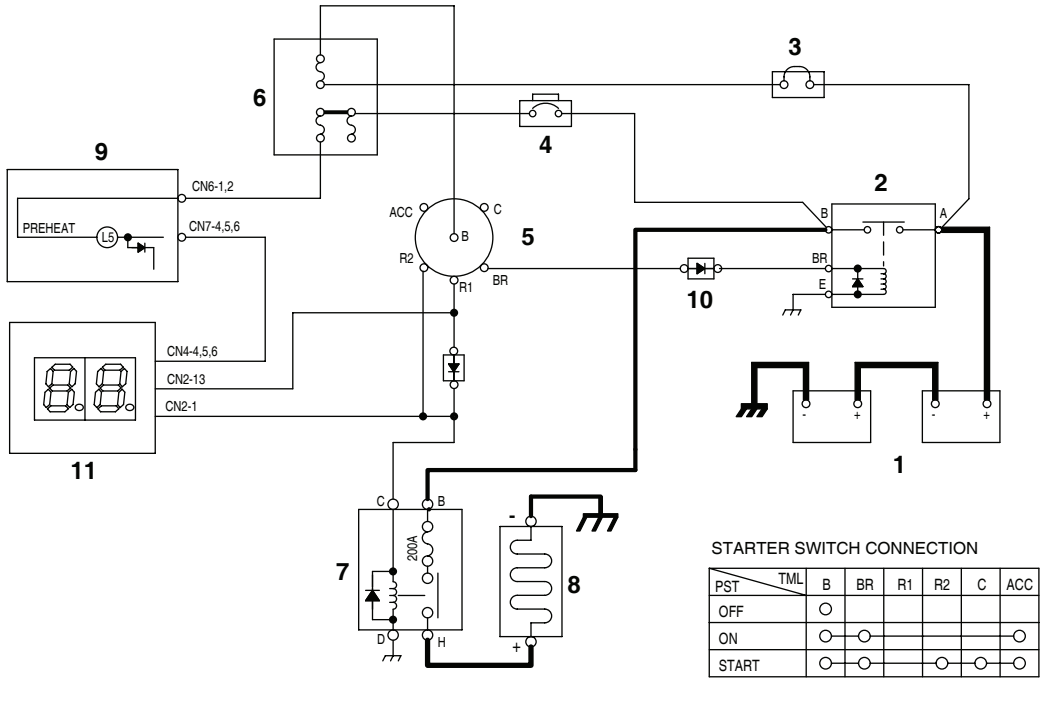

FG002088

Figure 5 ENGINE PREHEAT CIRCUIT

Reference Number	Description
1	Battery
2	Battery Relay
3	Fusible Link
4	Circuit Breaker
5	Starter Switch
6	Fuse Box

Reference Number	Description
7	Preheat Relay
8	Air Heater
9	Preheat Indicator Light
10	Diode
11	e-EPOS Controller

ENGINE STOP

Engine Stop circuit consists of starter switch (5), engine stop motor (9), engine stop relay (8). The current flowing into the "ACC" terminal of starter switch make the engine's start and stop function.

Stop Motor is decelerated by the worm gear in itself and convert a rotary motion into a back-and-forth motion to pull and push the engine stop lever.

If the starter switch turns "ON", the motor will stop automatically after revolving 0° → 180°, and if the starter switch turns "OFF", the motor will stop at the engine stop position by revolving 180° → 360°

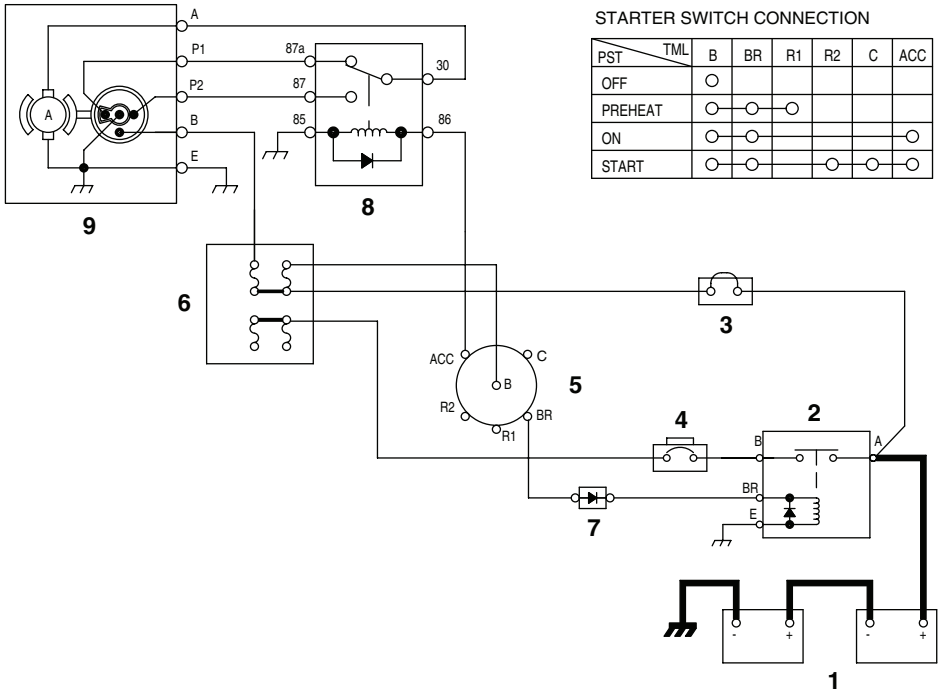

STARTER SWITCH CONNECTION

PST \ TML	B	BR	R1	R2	C	ACC
OFF	○					
PREHEAT	○	○	○			
ON	○	○				○
START	○	○		○	○	○

Figure 6 ENGINE STOP CIRCUIT

Reference Number	Description
1	Battery
2	Battery Relay
3	Fusible Link
4	Circuit Breaker
5	Starter Switch

Reference Number	Description
6	Fuse Box
7	Diode
8	Injector Solenoid
9	Engine Stop Motor

CHARGING SYSTEM

When the starter switch (5) is turned to the "ON" position, an initial excited current flows to the field coil of the alternator (7) through the battery relay (2) and circuit breaker (4). When the engine is started from this condition the alternator (7) starts charging. The current flows from the "B(B+)" terminal of alternator (7) → circuit breaker (4) → battery relay (2) → battery (1).

The alternator also supplies electric current to other electrical components. When the alternator (7) starts to operate, a current flows from the "R(I)" terminal of alternator → diode (8) → battery relay (2) coil securing a path for the charging current to the battery (1). Thus preventing the possibility of a high voltage build up and possible damage to the electric system.

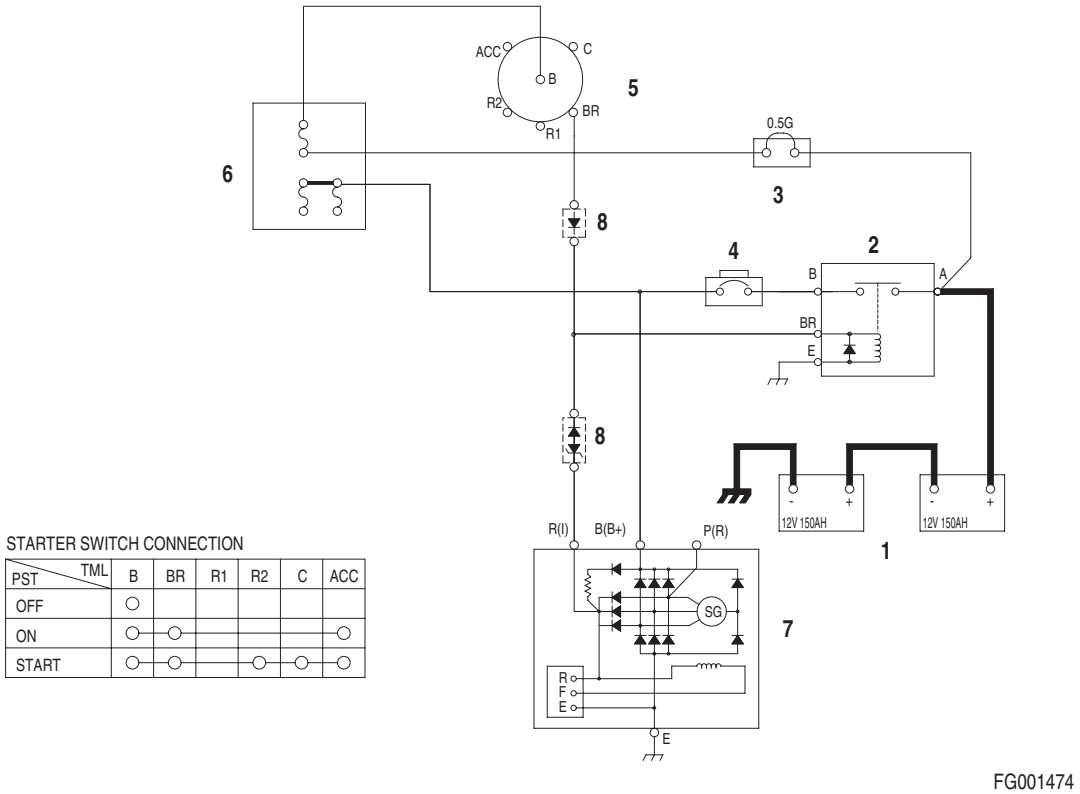

STARTER SWITCH CONNECTION

PST \ TML	B	BR	R1	R2	C	ACC
OFF	○					
ON	○	○				○
START	○	○		○	○	○

Figure 7 CHARGING CIRCUIT

Reference Number	Description
1	Battery
2	Battery Relay
3	Fusible Link
4	Circuit Breaker

Reference Number	Description
5	Starter Switch
6	Fuse Box
7	Alternator
8	Diode

MONITORING SYSTEM

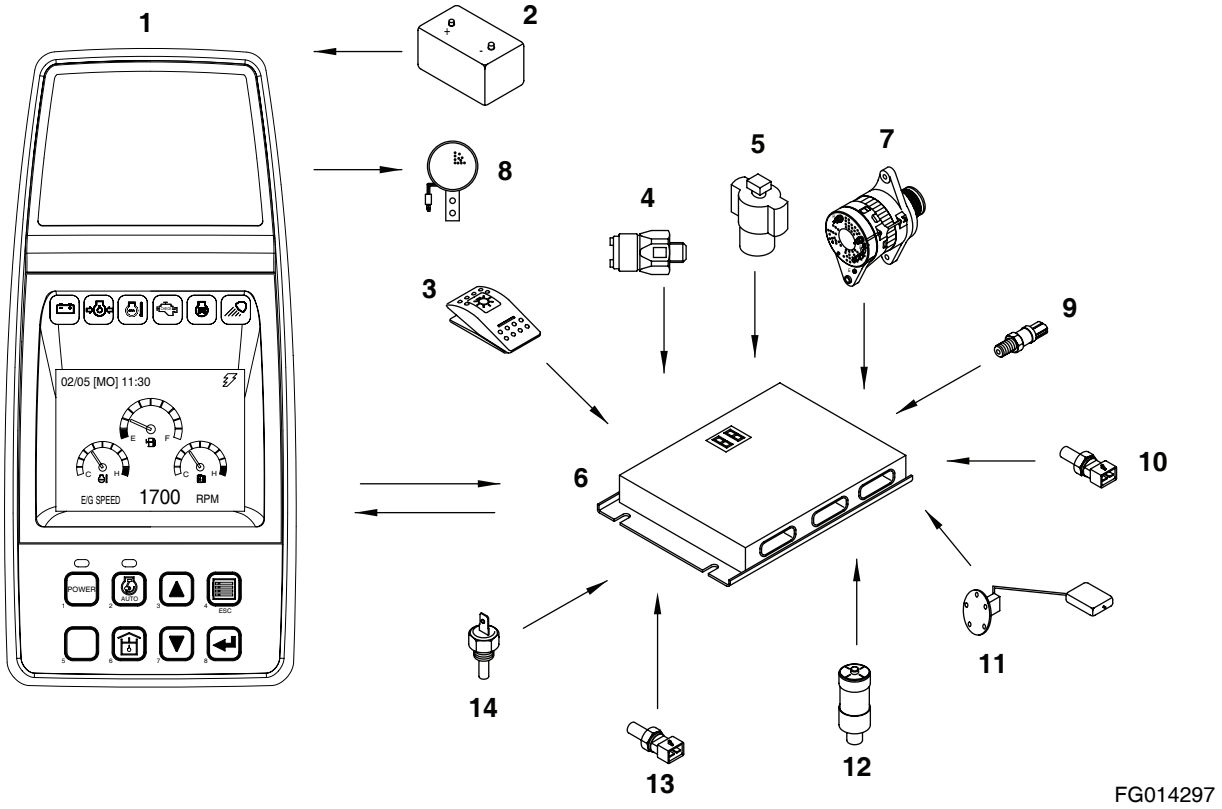

Figure 8

Reference Number	Description
1	Instrument Panel
2	Battery
3	Light Switch
4	Return Filter Switch
5	Pilot Filter Switch
6	e-EPOS Controller
7	Alternator

Reference Number	Description
8	Warning Buzzer
9	Pump Discharge Pressure Sensor
10	Hydraulic Oil Temperature Sensor
11	Fuel Sensor
12	Air Cleaner Indicator
13	Engine Coolant Temperature Sensor
14	Engine Oil Pressure Switch

The monitoring system displays the various data and warning signals onto the instrument panel by processing the information gathered from the e-EPOS controller. It displays information selected by the operator.

Instrument Panel

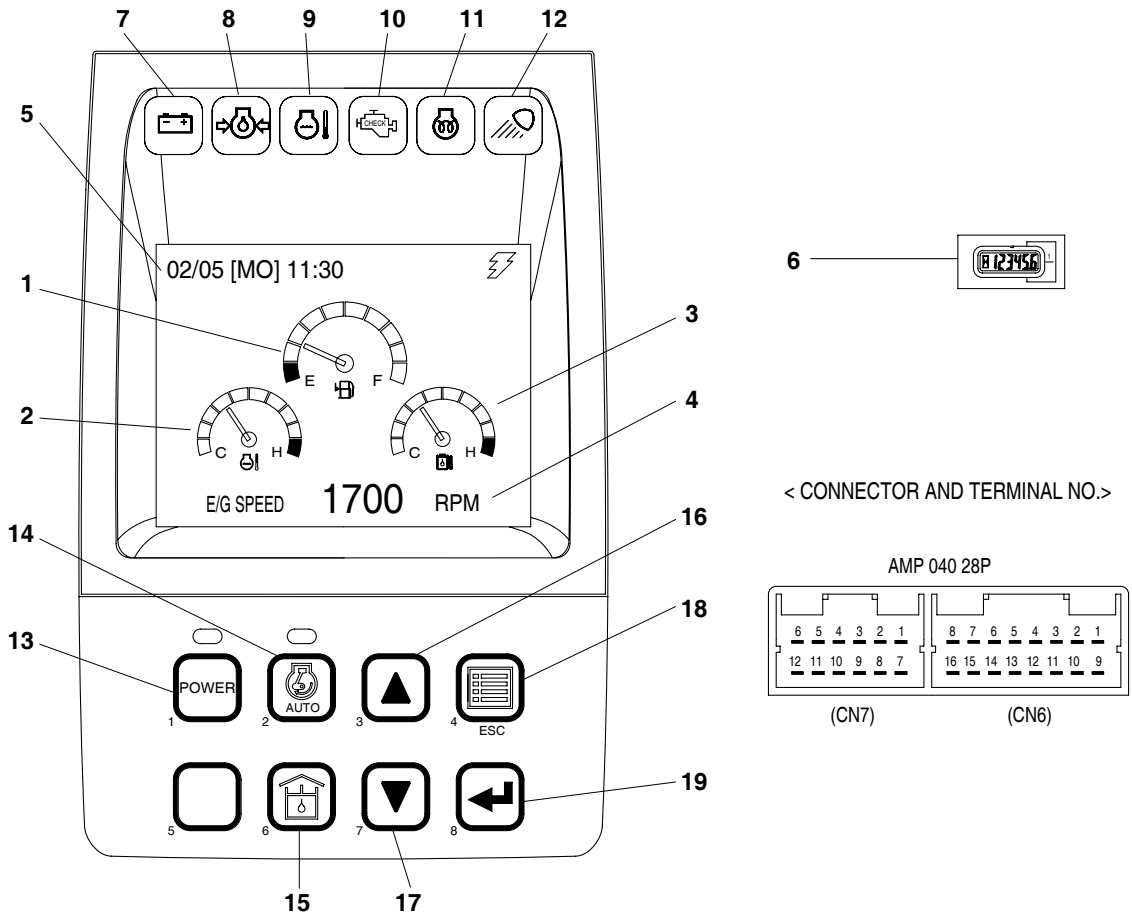

FG014290

Figure 9

Gauges	Warning Lights	Mode Selector Switches
1. Fuel Gauge	7. Charge Warning Light	13. Power Mode Selector Switch and Indicator
2. Engine Coolant Temperature Gauge	8. Engine Oil Pressure Warning Light	14. Auto Idle Switch and Indicator
3. Hydraulic Oil Temperature Gauge	9. Coolant Temperature Warning Light	15. Flow Adjusting Switch
4. Multifunction Gauge and Letter Information Area	10. Engine Check Warning Light	16. Up Button Switch
5. Digital Clock	11. Preheat Indicator Light	17. Down Button Switch
6. Hour Meter	12. Work Light Indicator Light	18. Display Selector Switch
		19. Selector Button Switch

When the engine starter switch is turned to the "I" (ON) position, all gauge bands, switch/button indicator lights and indicator/ warning lights will turn "ON" and the alarm buzzer will sound about two seconds.

During this functional check, a LOGO will appear on the multi function gauge in the graphic information area

Monitoring System Schematic

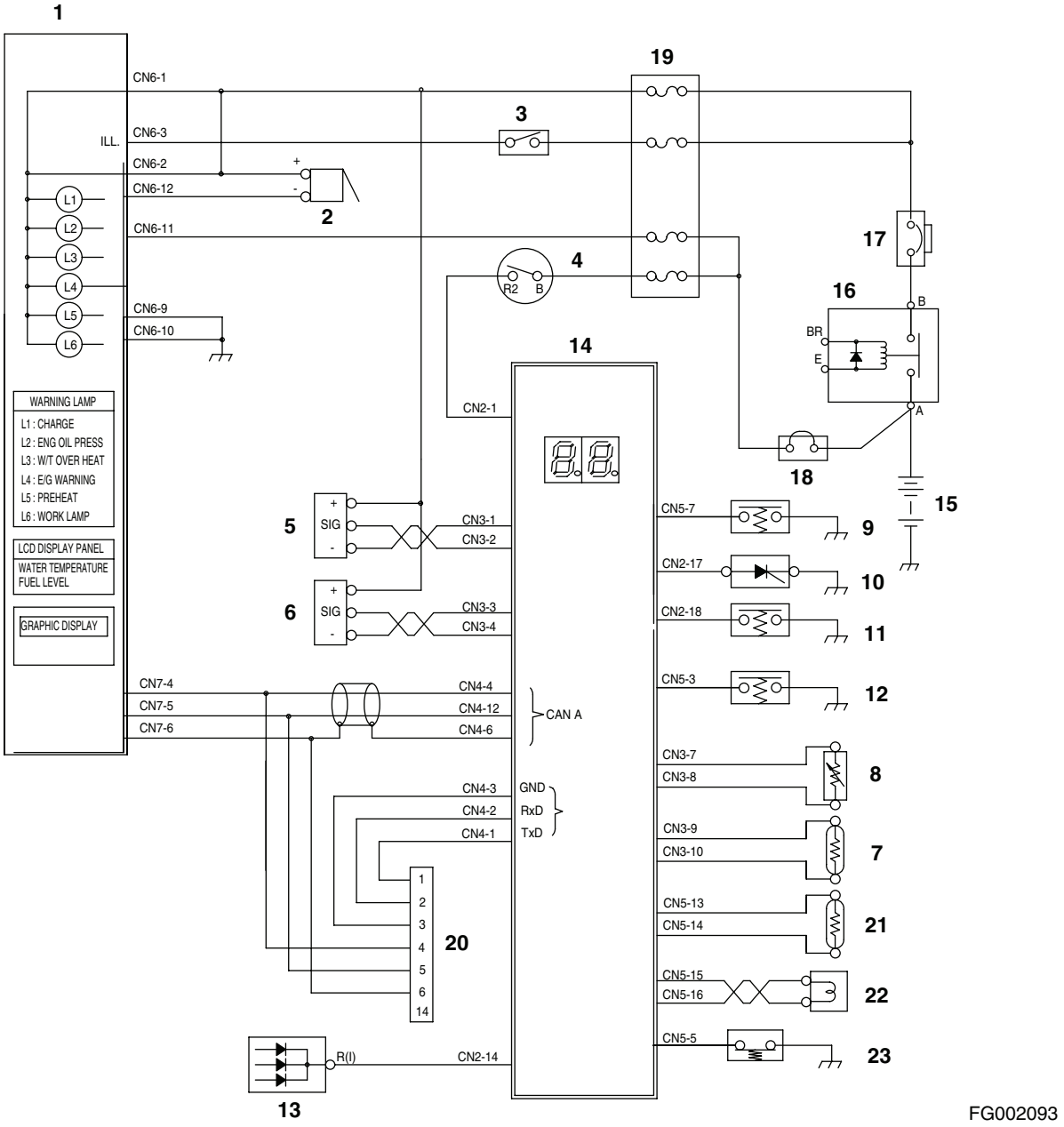

Figure 10

Reference Number	Description
1	Instrument Panel
2	Pilot Buzzer
3	Light Switch
4	Starter Switch
5	Front Pump Pressure Sensor
6	Rear Pump Pressure Sensor
7	Hydraulic Oil Temperature Sensor
8	Fuel Sensor
9	Pedal Pressure Switch (Optional)
10	Air Cleaner Indicator
11	Pilot Filter Switch

Reference Number	Description
12	Return Filter Switch
13	Alternator
14	e-EPOS Controller
15	Battery
16	Battery Relay
17	Circuit Breaker
18	Fusible Link
19	Fuse Box
20	Check Connector
21	Coolant Temperature Sensor
22	Engine Speed Sensor
23	Engine Oil Pressure Switch

Instruments

Function	Display	Sensor Specification	
		Input Terminal	Input Specification
Coolant Temperature	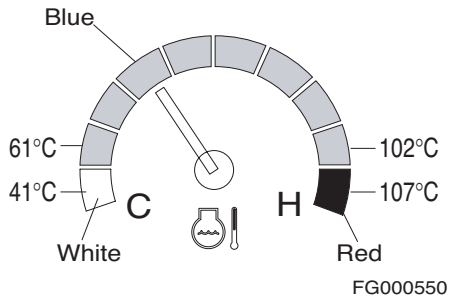	ECU-CAN Communication	41°C (106°F) → 1,372 ohms 61°C (142°F) → 855 ohms 102°C (216°F) → 160 ohms 105°C (221°F) → 147 ohms 107°C (225°F) → 128 ohms (When reading increase)
Fuel Level	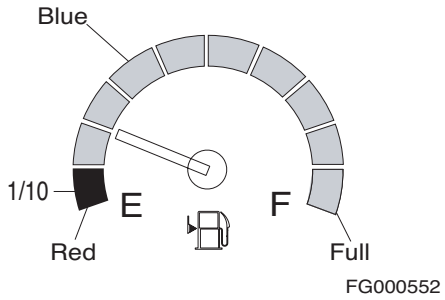	CN3-7 CN3-8	1/10 LCD (Red Zone) Blinking → over 5K ohms FULL → under 525 ohms
Hydraulic Oil Temperature	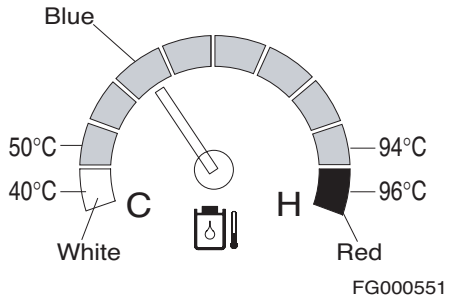	CN3-9 CN3-10	40°C (104°F) → 1,397 ohms 50°C (122°F) → 1,139 ohms 60°C (140°F) → 881 ohms 94°C (201°F) → 190 ohms 96°C (205°F) → 177 ohms (When reading increase)
Flow Adjusting	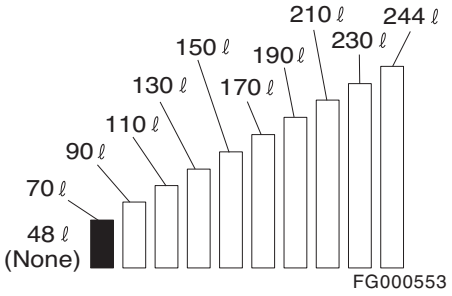	(Output Terminal) CN1-19 CN1-20	48 l/min → 615 mA 70 l/min → 583 mA 90 l/min → 555 mA 130 l/min → 495 mA (Default Set) 210 l/min → 376 mA 244 l/min → 260 mA

Function	Display	Sensor Specification	
		Input Terminal	Input Specification
Tachometer	E/G SPEED 1750 RPM FG013531	ECU-CAN Communication	N = 129 f / 60 N = Engine speed (rpm) f = Frequency of engine speed sensor (Hz)
Voltmeter	BATTERY 28.0 VOLT FG000050	CN2-14	0 - 32 VDC
Main pump discharge pressure (front pump)	FRONT PUMP 320 BAR FG000051	CN3-1 CN3-2	V = 0.00816 x P + 1.0 V: Sensor output voltage (V) P: Displayed pressure (Bar)
Main pump discharge pressure (rear pump)	REAR PUMP 313 BAR FG000052	CN3-3 CN3-4	

WARNING AND INDICATOR LIGHTS

Indication of Warning Lights

Description	Symbol	Input Terminal	Operation	Remarks
Charge	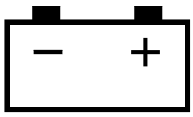 HAOA610L	CN2 - 14 CN1 - 8 (9)	It lights in case of no charge [voltage of "R(I)" terminal is below 12 ±1V] or overcharge [voltage of "R(I)" terminal is above 33(V)].	Normally, it lights when starting engine and is out after engine starts.
Engine Oil Pressure	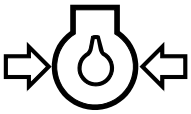 HAOA620L	CN5 - 5 CN1 - 8 (9)	It lights when engine oil pressure is below the reference.	After starting engine, if engine oil pressure is insufficient after 8 seconds, a warning buzzer will sound.
Coolant Temperature	 HAOD350L	CN5 - 13 CN5 - 14	It lights when engine coolant temperature sensor resistant is below about 128 ohms.	
Preheating	 HAOA639L	CN2 - 13 CN1 - 8 (9)	It lights during preheating and turns "OFF" after completion of preheating. (After 20 sec preheating)	Preheating period depends on coolant temperature. No preheating at above 10°C 10 sec preheating at 5°C 20 sec preheating at below 0°C
Work Light	 HB4O2003	CN2 - 6 CN1 - 8 (9)	It lights when work light turns "ON" (24V applied).	

Indication of Multifunction Gauge and Letter Information Area

Description	Symbol	Input Terminal	Operation	Remarks
Hydraulic Oil Temperature	FG000056	CN3 - 9 CN3 - 10	When hydraulic oil temperature is above about 96°C.	
Fuel Exhausted	FG000057	CN3 - 7 CN3 - 8	When fuel is almost exhausted.	
Air Cleaner	FG000053	CN2 - 17 CN1 - 8 (9)	When air cleaner is clogged.	
Return Filter	R FG000054	CN5 - 3 CN1 - 8 (9)	When return filter pressure is above about 1.50 kg/cm² (21 psi)	
Pilot Filter	P FG000055	CN2 - 18 CN1 - 8 (9)	When pilot filter pressure is above about 1 kg/cm² (14 psi)	

Boost	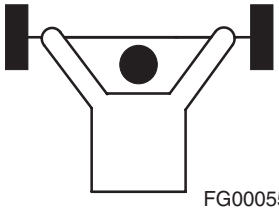 FG000554	CN2 - 2 CN1 - 8 (9)	It lights when boost is selected.	
Breaker	 FG001470	CN2 - 10 CN1 - 8 (9)	It lights when breaker is selected.	
Shear	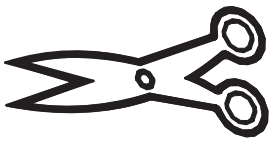 FG001471	CN2 - 9 CN1 - 8 (9)	It lights when shear is selected.	

INITIAL OPERATION

Item	Input (Terminal)	Output (Operation and initial setting mode)
Initial Operation	When "CN6-1,2" is applied battery voltage (starter switch shifts from "OFF" to "ON"	• LCD, all of LED and warning lights are turned "ON" and turned "OFF" after about 2 seconds. • Warning buzzer is activated and turned "OFF" after about 2 seconds. • Power mode: Standard mode. • Work Mode: Digging mode. • Auto Idle: High Output (Activation). • Display: Indicating coolant temperature, Fuel level, Hydraulic oil temperature, Engine speed. • Clock: Current time display.

NOTE: *Refer to method for setting clock in operation manual for setting time.*

MODE SELECTOR SWITCH

Power Mode / Switch

Operation Mode		Output Check (Operation mode display LED)	e-EPOS Output		
			Electromagnetic Proportional Pressure Reducing Valve (E.P.P.R Valve) Current (mA)	Swing Priority Solenoid Valve	7-Segment Display
Power Mode	Power Mode	ON	No-load: 200 ±20mA Load: Variable output (Max. current: 600 ±20mA)	-	9 x
	Standard Mode	OFF	No-load: 300 ±20mA Load: Variable output (Max. current: 600 ±60mA)	-	7 x

NOTE: *When the engine speed is below 1,000 rpm, the output current of E.P.P.R valve is fixed to be 600 ±60mA.*

Auto Idle Switch

Operation Mode		Output Check (Operation mode display LED)
Auto Idle	Activation	ON
	Cancellation	OFF

GRAPHIC INFORMATION AREA DISPLAY

Overview

Many kinds of condition of machine are displayed on the letter information display department. The information display department is divided into two menus. One is main menu for user and the other is special menu for specialist. These menus can be moved from normal display mode by the combination of selector buttons.

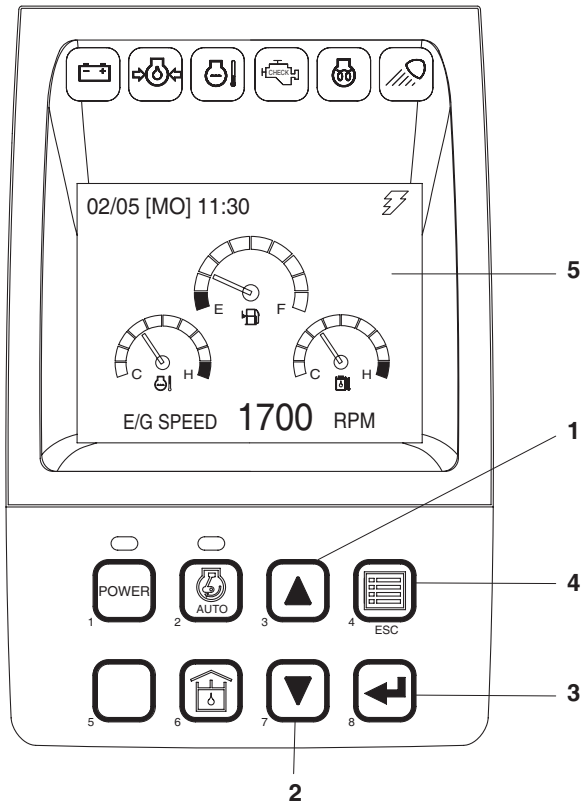

FG014291

Figure 11

Selector Buttons	Graphic Display Area
1. Up Arrow Button	5. Letter Information Display Department
2. Down Arrow Button	
3. Enter Button	
4. Escape Button	

Main Menus for the Graphic Display Area

1. Main menu: Language setting, Time setting, Filter/Oil information, Brightness adjustment, Password
2. Special menu: Information of machine status, failure information, Information of machine operation.

Menu Selector Buttons

1. Up Arrow Button (▲, 1 on Figure 11): Move the cursor to up, left and previous screen.
2. Down Arrow Button (▼, 2 on Figure 11): Move the cursor to down, right and next screen.
3. Enter Button (↵, 3 on Figure 11): Move the menu to selected mode. When setting the menu, this button is used to function as the selector button.
4. Escape Button (ESC, 4 on Figure 11): Move a screen to previous menu or main menu.

MAIN MENU

When the "ESC" button is pressed for more than 3 seconds, the main menu screen is displayed.

Main menu offers sub-menus (language setting, time setting, or filter/oil information, brightness adjustment, password) to the operator.

Refer to the "Operation and Maintenance Manual" for details.

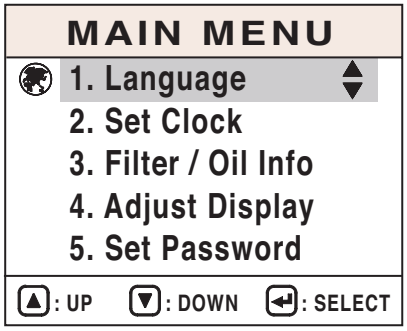

FG000072

Figure 12

Language

Put the cursor on Language in the main menu and put the Enter Button (↵, 3 on Figure 11) and the language select view appears.

The default language is Korean, but it will memorize and use the newly set language.

Use the Up Arrow Button (▲, 1 on Figure 11) or Down Arrow Button (▼, 2 on Figure 11) to move cursor to a language to be selected on the Language Select display and press the Enter Button (↵, 3 on Figure 11) and the selected language is indicated in the right bottom of the screen.

At this point pressing the Enter Button (↵, 3 on Figure 11) or the Escape Button (ESC, 4 on Figure 11) more than 1 second brings the main menu with changed language and then pressing the ESC button again shows the default view.

Without pressing a button more than 20 seconds, the default view appears.

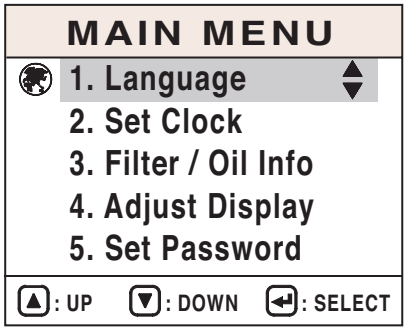

FG000072

Figure 13

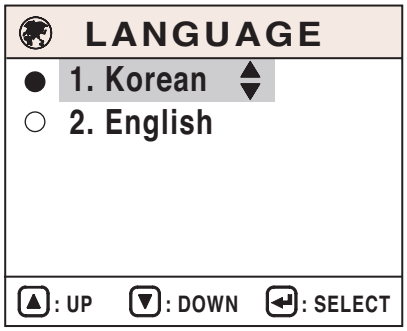

FG000783

Figure 14

Set Clock

It is used to adjust time of the digital clock.

Pressing the Enter Button (↵, 3 on Figure 11) in the Main Menu after putting cursor on Set Clock brings Set Clock display.

Without pressing a button more than 20 seconds, the default view appears.

Please refer to the Operation Manual for detailed information on Time Setting.

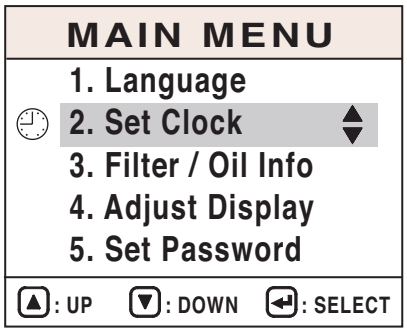

FG000075

Figure 15

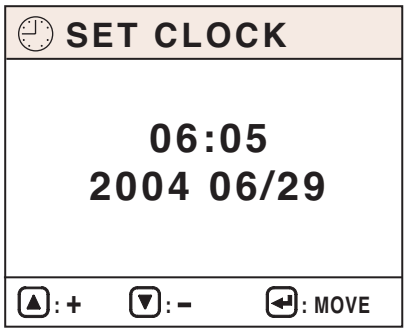

FG000076

Figure 16

Filter/Oil Info

This mode displays total operating hours of filters and oils.

After changing the filter and oil, reset the operating hour and then the operating hours until the next service interval can be easily checked.

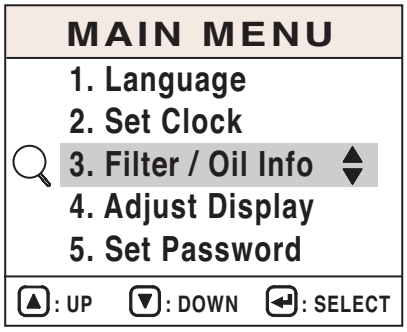

FG000077

Figure 17

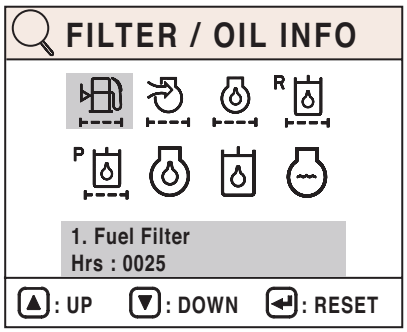

FG000078

Figure 18

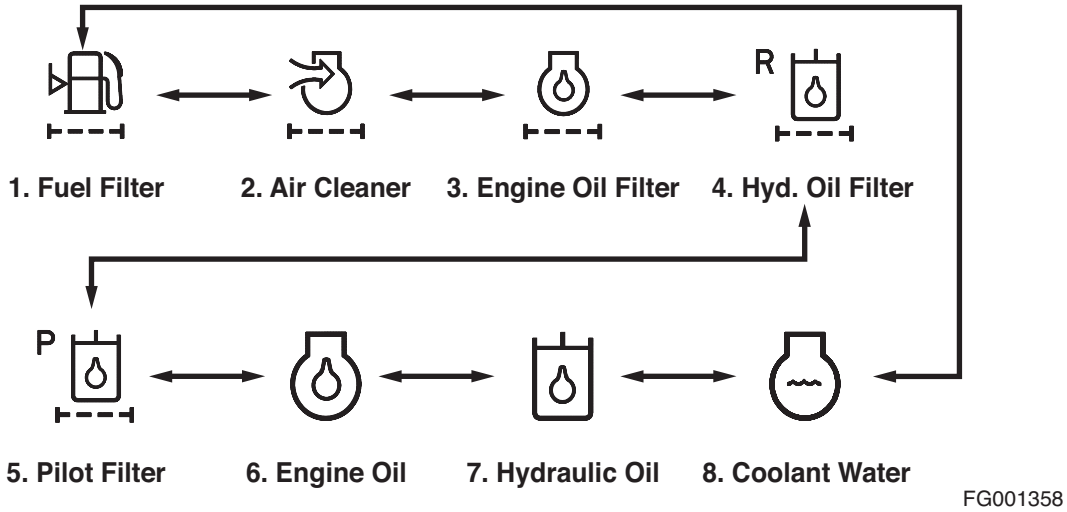

Figure 19

Adjust Display

Pressing the Enter Button (↵, 3 on Figure 11) in the main menu after putting cursor on Adjust Display brings Adjust Display.

Screen brightness can be adjusted using the Up Arrow Button (▲, 1 on Figure 11) or the Down Arrow Button (▼, 2 on Figure 11).

The default brightness is set to 50%.

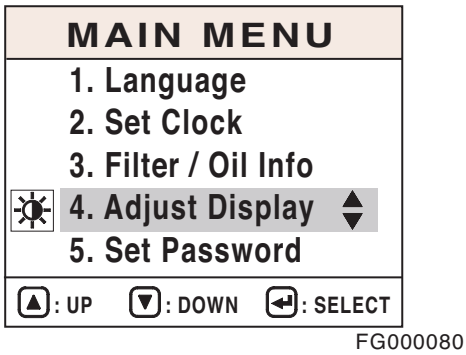

Figure 20

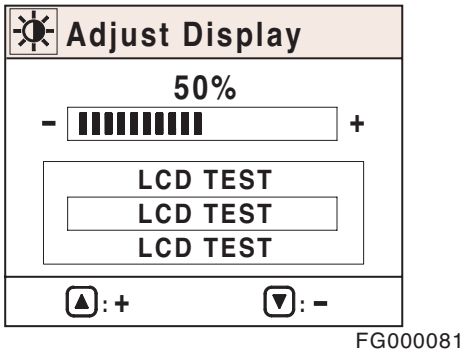

Figure 21

Set Password

This menu is used to apply (lock), release, or change password.

Please refer to the Operation Manual for detailed information on Password Setting.

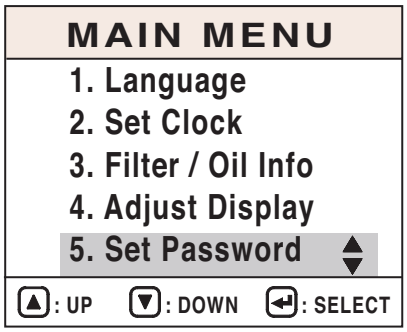

FG000227

Figure 22

SPECIAL MENU

In this menu, many types of operating conditions and functions can be accessed and displayed, including the e-EPOS controller. This menu is mainly used for machine testing and failure diagnostics.

The special menu offers three sub-menus:

1. Machine status.
2. Failure information.
3. Information on machine operation.

Entering/Accessing and Exiting/Escaping Menus

Entering/Accessing Menus

When normal mode screen is displayed, if the enter button (↵, 4) and escape button (ESC, 3) are pressed simultaneously for more than 3 seconds, normal mode screen (Figure 24) will be changed to special menu screen (Figure 25).

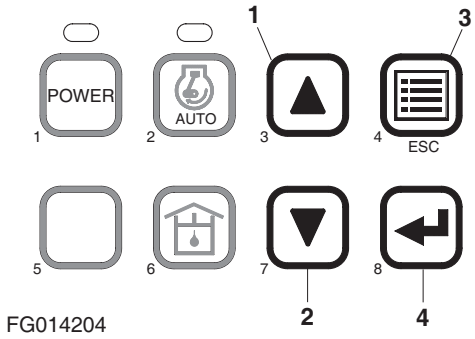

Figure 23

Normal Mode Screen

NOTE: *Normal mode screen can display many kinds of display mode by selecting, for example, engine speed (RPM), battery voltage (VOLT), front pump pressure (BAR), rear pump pressure (BAR) and so on by selecting.*

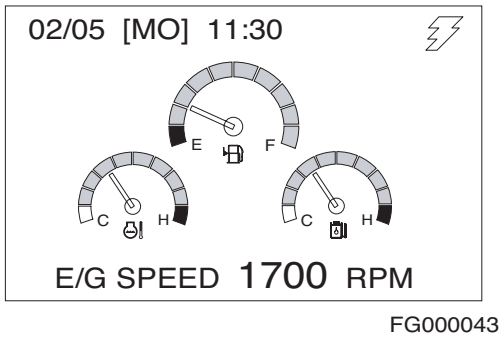

Figure 24

Special Menu Screen

NOTE: *Displayed language on the special menu screen consists of Korean and English.*

If any language except for Korean is selected during language selection mode of main menu, only English will be displayed on special menu screen.

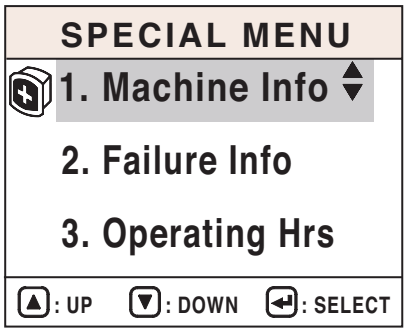

FG000558

Figure 25

Exiting/Escaping Menus

1. If escape button (ESC, 4 on Figure 23) is pressed for more than 1 second, the special menu screen will be returned to the normal mode screen.
2. If this special menu is "ON" without any activity, for more than 20 seconds, it will turn to the normal mode screen.
3. After the turning starter switch to the "OFF" position, turn it back to the "ON" position, and the normal mode screen displayed once again.

Special Menu Selections

Submenu Selection Method

Various sub-menus can be selected by pressing "Up (▲, 1 on Figure 23)" and "Down (▼, 2 on Figure 23)" button.

Move the cursor to desired menu and a selected menu will be inverse displayed.

When the selected menu is inverse displayed, press the "Enter (↵, 3 on Figure 23)" button for menu selection.

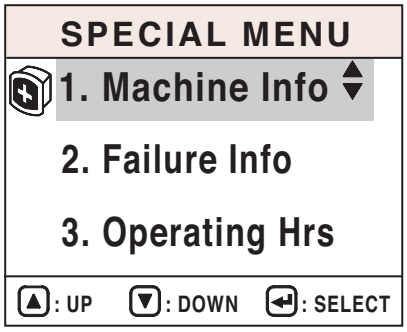

FG000558

Figure 26

Information of Machine Status

1. Entering Sub-menus: When cursor is located on "Machine Info" of special menu screen, press "Enter (↵, 3 on Figure 23)" button and the "Machine Info" will be displayed.
2. Exiting Sub-menus: If escape button (ESC, 4 on Figure 23) is pressed for more than 1 second, display will be turned to previous screen.

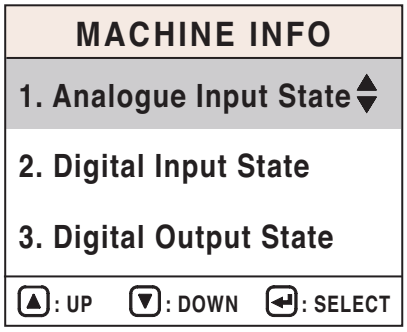

FG000559

Figure 27

Analog Inputs Description

Analog Input Items	Display	Remark
1. Pump P/V	mA	Current in pump proportional valve.
2. Cooling Fan P/V	mA	N.A.
3. Flow Control P/V	mA	Current in flow control proportional valve.
4. Dial	mV	Indicating dial voltage.
5. TPS	mV	N.A.
6. E/G Control Motor	mV	N.A.
7. Boom Pressure	BAR	Boom cylinder head pressure.
8. Pilot Gear Pump Press	BAR	N.A.
9. Boost Pressure	BAR	Pump pressure for boost.
10. Intake Manifold Temperature	°C	Temperature of air incoming to intake manifold.
11. E/G Oil Pressure	BAR	Engine oil pressure.
12. Fuel Temperature	°C	Fuel temperature.
13. E/G Oil Temperature	°C	Engine oil temperature.
14. Load At Cur. Spd	%	Current load ratio of equipment.

Submenu Selections

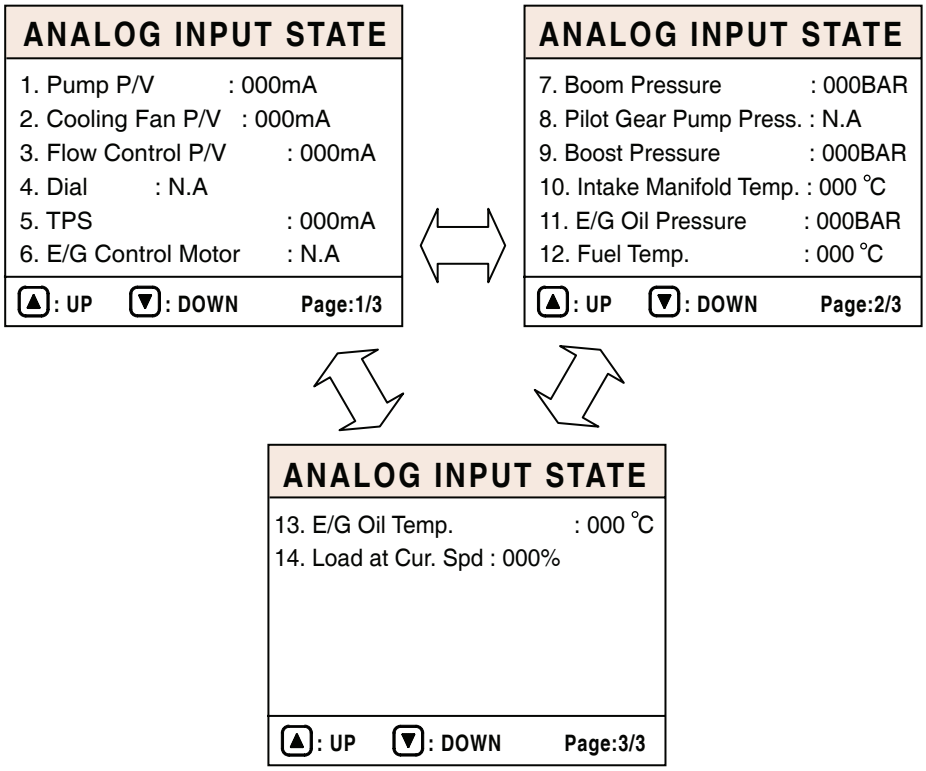

FG003928

Figure 28

Digital Inputs Descriptions

Digital Inputs Items	Mark	Remark
1. Alternator	ON / OFF	Lights up when output at alternator "R(I)" terminal is above 12 ±1V.
2. Travel Select SW		N.A. (only for wheel type equipment)
3. High Speed Sel. SW (M)		Lights up when the travel speed selector switch is set to the "I" position.
4. High Speed Sel. SW (A)		Lights up when the travel speed selector switch is set to the "II" position.
5. Pressure SW (Py)		Lights up when the pressure switch (Py) is "ON."
6. Pressure SW (Px)		Lights up when the pressure switch (Px) is "ON."
7. E/G Oil Press. SW		Lights up when the engine oil pressure switch is "ON."
8. Air Cleaner Clogged		Lights up when the air cleaner indicator contact is "ON."
9. Return Filter Clogged		Lights up when the return filter pressure switch is "ON."
10. Pilot Filter Clogged		Lights up when the pilot filter pressure switch is "ON."
11. OWD Warning SW		Lights up when the overload warning selector switch is "ON."
12. Brake Oil Press. SW		N.A. (only for wheel type equipment)
13. Pedal Press. SW		Lights up when the pedal pressure switch is ON.
14. One Way Sel. SW		Lights up when the selector switch is turned to breaker.
15. Two-way Sel. SW		Lights up when the Selector Switch is turned to "SHEAR."
16. Power Max. SW		Lights up when the boost button is "ON" with the Select switch turned to "BOOST."
17. Breaker SW		Lights up when the boost button is "ON" with the selector switch turned to "BREAKER."
18. Preheat Select		Lights up during preheating (CN5-2) terminal voltage is below 2V.
19. Quick Coupler		Lights up when the Quick Coupler switch is "ON."
20. F and R Lever		N.A. (only for wheel type equipment)
21. Preheat Select		N.A.
22. Reverse Fan SW		N.A.
23. Pilot Cutoff SW		Lights up when pilot cutoff switch is "ON."

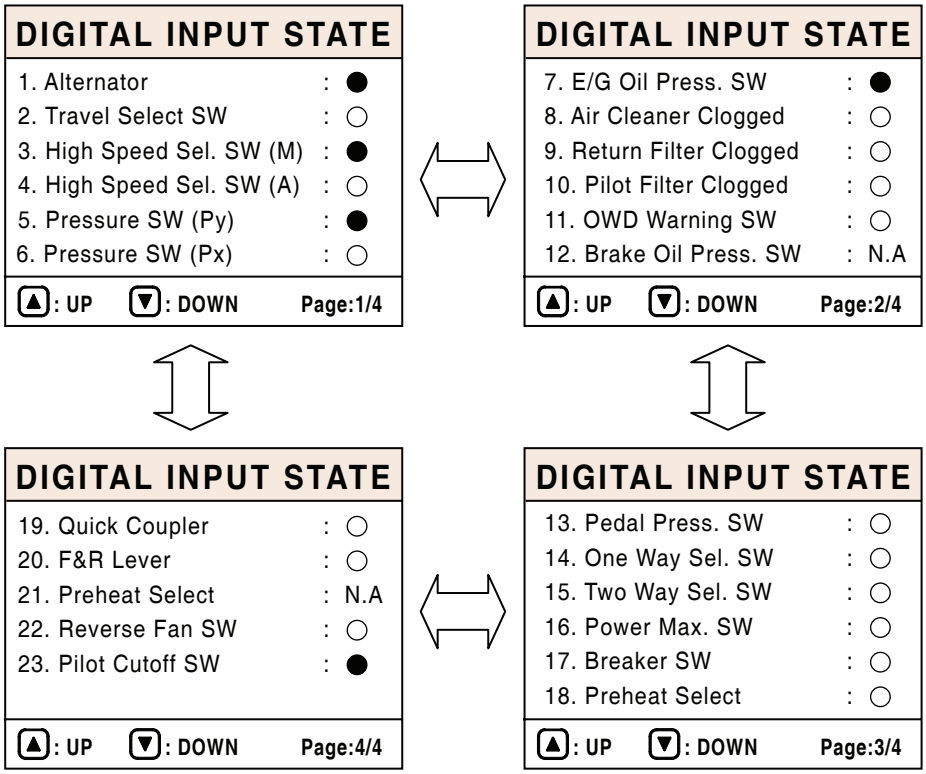

FG003929

Figure 29

Digital Outputs Descriptions

Digital Outputs Items	Mark	Remark
1. Relief Press. Up S/V	ON / OFF	Lights up when the relief press up solenoid valve is "ON."
2. High Speed S/V		Lights up when the high speed solenoid valve is "ON."
3. Reverse Fan S/V		N.A.
4. Starter Relay		When the starter relay is "ON."
5. After Heat Relay		N.A.

Menu Select

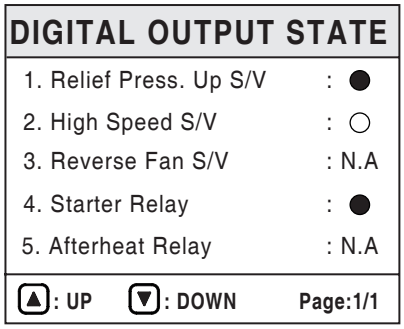

FG014293

Figure 30

Failure Information

1. Entering Sub-menus: When a cursor is located in "Failure Info" of special menu screen press enter button (↵, 3 on Figure 23) and "Failure Info" screen is displayed.
2. Exiting Sub-menus: If escape button (ESC, 4 on Figure 23) is pressed for more than 1 second, this information screen will be returned to previous screen.

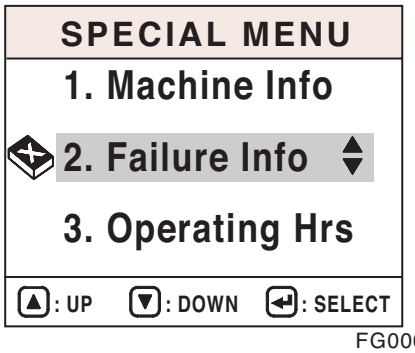

FG000563

Figure 31

* Real-time Failure:
  Current status of failure is displayed.

* Failure Log:
  Memorized record of past failure is displayed.

* Delete Fail Log:
  This mode is used to delete all of the memorized record of past failure.

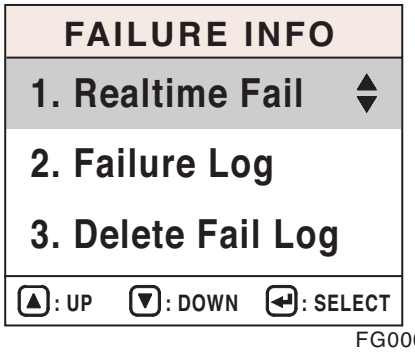

FG000564

Figure 32

A. Current failure information

Current status of failure is displayed (Failure code, failure contents).

When a number of failures are produced, failure information can be checked using "UP" (▲, 1 on Figure 23) or "DOWN" (▼, 2 on Figure 23) button.

* 1/2: A serial number of current failure/ total quantity of failure.

* Vxxx-xx: Vxxx is a unique code and xx is a FMI (Failure Mode Identifier) number.

  - V: Machine related failure code

  - E: Engine related failure code

Refer to the failure information code for unique codes and FMI numbers.

This example shows one of two failures.

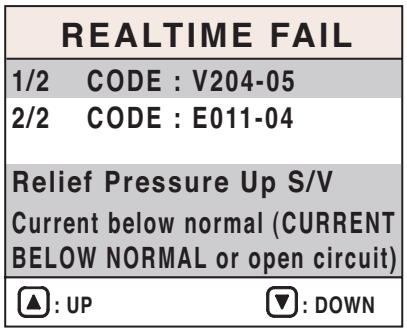

FG000565

Figure 33

B. Past failure information

Memorized record of past failure is displayed (Failure code, failure contents).

When a number of failures are produced, failure information can be checked using "UP" (▲, 1 on Figure 23) or "DOWN" (▼, 2 on Figure 23) button.

NOTE: *" Number: xxx ": "xxx" means that the totally counted number of the same failure.*

" Period:xxxxxHrxxm ": It indicates the period for which machine has operated until a failure takes place. (For more than two occurrences of the same failure, until the first occurrence time.)

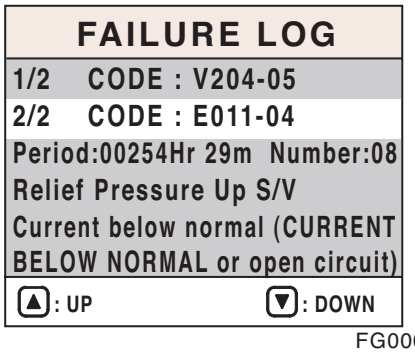

FG000566

Figure 34

C. Failure record deletion

This mode is used to delete the memorized record of past failure. If this mode is selected, all records will be deleted.

When "YES" (↵, 3 on Figure 23) button is pressed, the memorized record will be deleted.
At this time, deletion signal will be displayed and the screen will move to previous menu after deletion.

This screen will be displayed during 3 seconds.

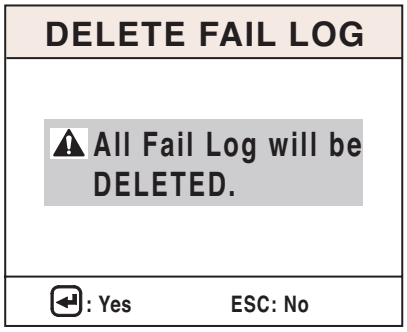

FG000567

Figure 35

Input your password with one of No. 1 - 8 switches.

When "NO" (ESC, 4 on Figure 23) button is pressed, the screen will recover to previous menu without deletion.

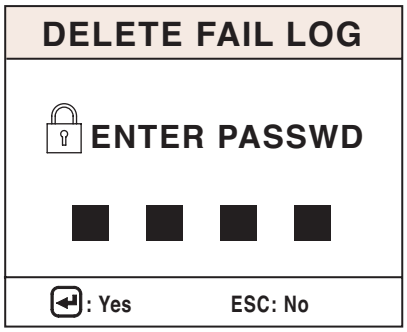

FG000568

Figure 36

Delete Completed screen will appear 3 seconds and the screen will move to Failure Info screen.

It has been shown 3 seconds upon deleting Fail Log.

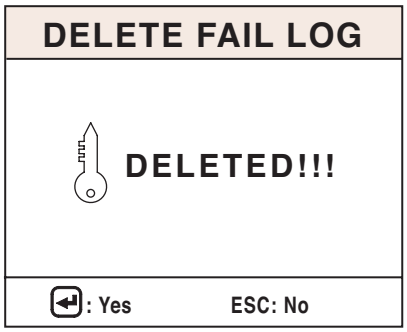

FG000569

Figure 37

The screen shown on the left will appear 3 seconds in case of wrong password input and then Enter Password screen appears again.

It has been shown 3 seconds in case of password failure.

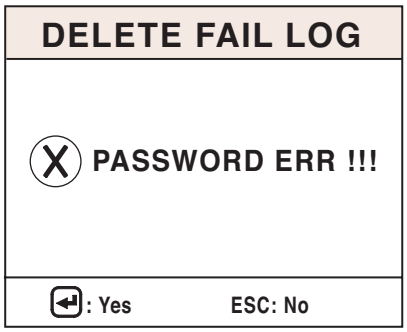

FG000570

Figure 38

Failure Information Code at Machine Side

Code	Failure Component	Measuring Points	Correct Value		Remarks
			Active	Passive	
V201	Gauge Panel Communication Error	CN7-4 CN7-5	-	R = 60 ±5 Ω	It is a composite resistance of CAN line. This value has to be measured by connected condition of CAN line.
V202	Ecu Communication Error	CN4-4 CN4-5	-	R = 60 ±5 Ω	
V210	Pump P/V	CN1-10 CN1-21	-	R = 18 ±2 Ω (25°C (77°F))	Pump proportional pressure reducing valve.
V211	Cooling Fan P/V		-	-	N.A.
V212	Flow Control P/V	CN1-19 CN1-20	-	R = 14 ±2 Ω (25°C (77°F))	Flow control proportional pressure reducing valve.
V213	Relief Pressure Up S/V	CN1-1 CN1-11	V = V_volt (Note 4.)	R = 26.2 ±2 Ω (25°C (77°F))	Breaker/boost/ shear selector switch has to be selected as a boost function and the boost switch on the right-hand joystick is "ON" status.
V214	High Speed S/V	CN1-1 CN1-12	V = V_volt	R = 26.2 ±2 Ω (25°C (77°F))	Voltage is only measured when the pressure switch (Py) is turned "ON."
V215	Swing Priority S/V	CN1-1 CN1-13	V = V_volt	R = 26.2 ±2 Ω (25°C (77°F))	Work mode has to be selected as a trenching mode.
V216	Reverse Fan Speed S/V		-	-	N.A.
V217	Starter Relay	CN1-1 CN1-15	V = V_volt	-	It has to be measured in engine start up state.
V218	After Heat Relay	1-16 1-04	-	-	N.A.

Code	Failure Component	Measuring Points	Correct Value		Remarks
			Active	Passive	
V220	Front Pump Press. Sensor	CN3-1 CN3-2	V = IV	-	It has to be measured in engine stop state.
V221	Rear Pump Press. Sensor	CN3-3 CN3-4	V = IV	-	
V222	Hyd. Oil Temperature Sensor	CN3-9 CN3-10	-	R = 2.45 ±0.25 kΩ (25°C (77°F)) R = 320 ±32 Ω (80°C (176°F))	
V223	Water Temperature Sensor		-	-	N.A.
V224	Engine Speed Sensor		-	-	N.A.
V225	Fuel Level Sensor	CN3-7 CN3-8	-	Empty: 5 ±0.25 kΩ Full: 320 ±32 Ω	
V226	Alternator Potential	CN2-14 CN1-8	V = 2 ±1V	-	It has to be measured in engine stop state.
V227	Dial	CN3-16 CN3-7	-	R = 1.0 ±0.3 kΩ R = 4.0 ±1.5 kΩ	
V228	Tps (Wheel)		-	-	N.A.
V229	Parking Brake Press. Sensor		-	-	N.A.
V230	E/g Control Motor Sensor		-	-	N.A.

NOTE: *1. Active value: Starter switch has to be turned "ON"*

Measuring points between component and wire harness have to be connected.

2. Passive value: Starter switch has to be turned "OFF"

Measuring points between component and wire harness have to be disconnected.

3. Measuring points are engine controller's points and passive value is each component's value.

4. V_batt: Source power of equipment.

FMIs (Failure Mode Identifier)

FMI 0	Above normal range (DATA VALID but ABOVE NORMAL OPERATIONAL RANGE)
FMI 1	Below normal range (DATA VALID but BELOW NORMAL OPERATIONAL RANGE)
FMI 2	Incorrect signal (DATA ERRATIC, INTERMITTENT OR INCORRECT)
FMI 3	Voltage above normal (VOLTAGE ABOVE NORMAL OR SHORTED TO HIGH SOURCE)
FMI 4	Voltage below normal (VOLTAGE BELOW NORMAL OR SHORTED TO LOW SOURCE)
FMI 5	Current below normal (CURRENT BELOW NORMAL OR OPEN CIRCUIT)
FMI 6	Current above normal (CURRENT ABOVE NORMAL OR GROUNDED CIRCUIT)
FMI 8	Abnormal signal (ABNORMAL FREQUENCY OR PULSE WIDTH OR PERIOD)
FMI 11	Failure mode not identifiable (ROOT CAUSE NOT KNOWN - Malfunction)
FMI 31	NOT AVAILABLE OR CONDITION EXISTS

Information of Machine Operation

Accumulated operation hour of each mode and status is displayed.

1. Operating Hour Information

   A. Entering Sub-menus: When a cursor is located in "Operating Hrs" of special menu screen (Figure 39) press enter button (↵, 3 on Figure 23) and "Operating Hrs" screen will be displayed (Figure 40).

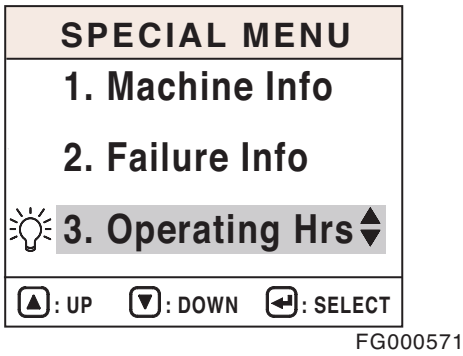

Figure 39

   B. Information screen of machine operation (Figure 40).

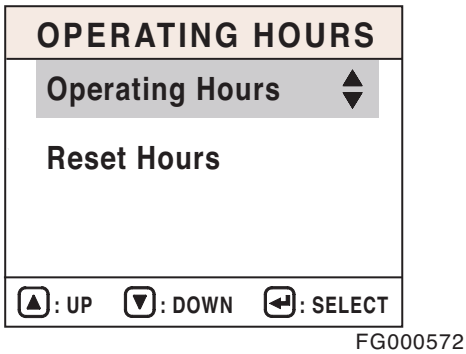

Figure 40

C. Operating Hours Screen

D. Exiting Sub-menus: If escape button (ESC, 4 on Figure 23) is pressed for more than 1 second, this information screen will be returned to previous screen.

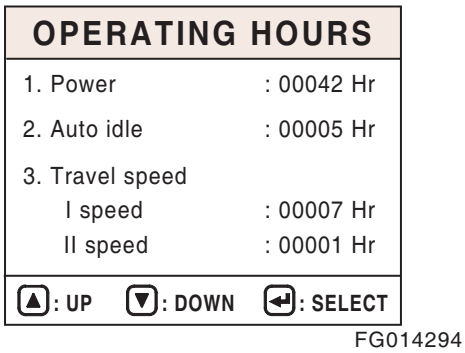

Figure 41

Information contents of operation hour

Item	Information Contents	Detection Method
Power Mode	Operation hours used power mode are displayed.	Power mode switch (Instrument panel) - "ON" status and Alternator signal (CN2-14) is "HI"
Auto Idle	Operation hours used auto idle status are displayed.	Auto idle switch (Instrument panel) - "ON" status and Alternator signal (CN2-14) is "HI"
Travel Speed: -1st - 2nd	Operation hours used low speed and high speed are displayed.	1st: High speed s/v "OFF" status 2nd: High speed s/v and travel pressure switch "Py" (control valve) - "ON" status.
Hydraulic Oil Temperature Distribution (°C (°F))	Temperature of hydraulic oil is classified 6 steps. And operation hours of each step are displayed Under 30°C (87°F) 31 - 50°C (88 - 123°F) 51 - 75°C (124 - 168°F) 76 - 85°C (169 - 186°F) 86 - 95°C (187 - 203°F) Over 96°C (204°F)	The resistance delivered from temperature sensor of hydraulic oil is classified 6 steps. And operation hours of each step are displayed. (Alternator output HI status)
Coolant Temperature Distribution (°C (°F))	Temperature of coolant is classified 6 steps. And operation hours of each step are displayed. Under 40°C (105°F) 41 - 60°C (106 - 141°F) 61 - 85°C (142 - 186°F) 86 - 95°C (187 - 204°F) 96 - 105°C (205 - 222°F) Over 106°C (223°F)	The resistance delivered from coolant sensor is classified 6 steps. And operation hours of each step are displayed. (Alternator output HI status)

Menu Selection of Operation Hour Information

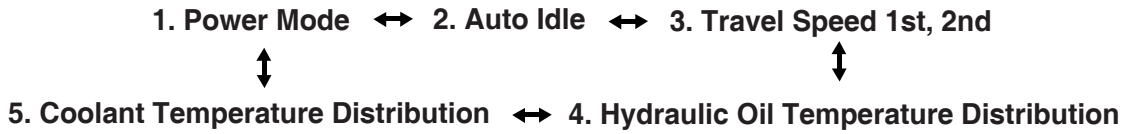

FG014295

Figure 42

Example of Machine Operation Info Screen

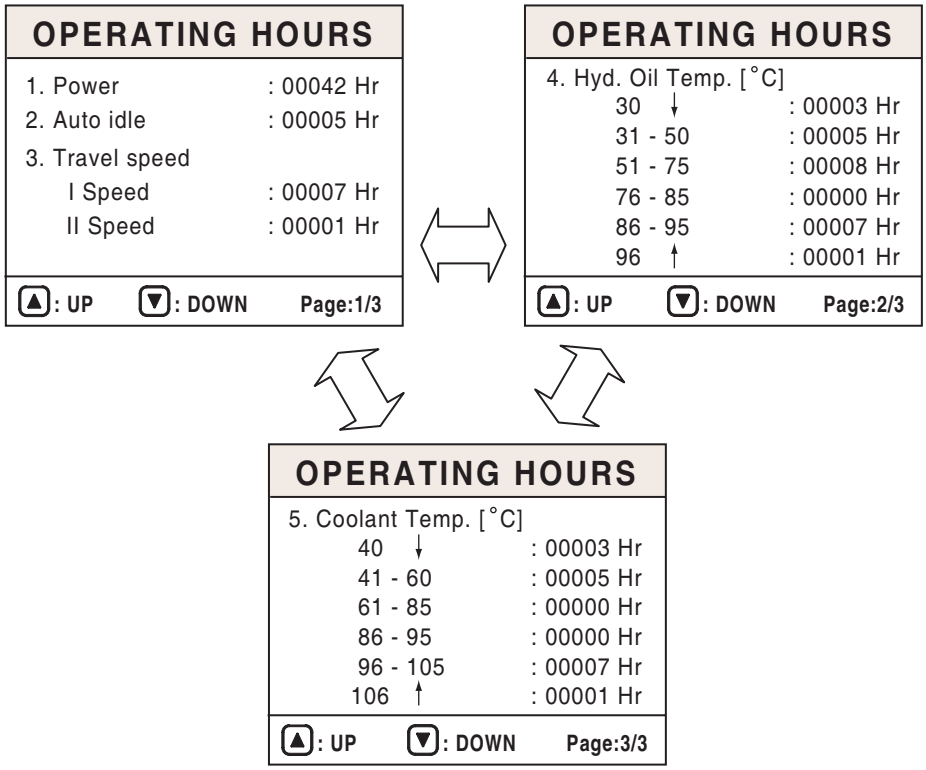

FG014296

Figure 43

2. Operation hour reset

   A. Entering Sub-menus: When cursor is located in "Reset Hrs" of information screen of operating hours press enter button (↵, 3 on Figure 23) and "Machine Operation Info" screen will be displayed.

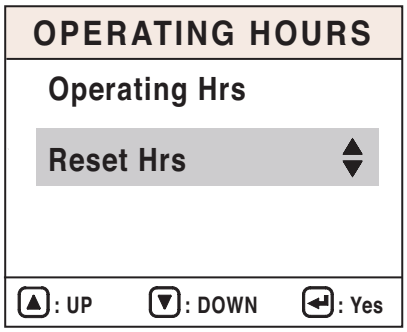

FG000578

Figure 44

B. Reset screen of operation hour

C. Exiting Sub-menus: If escape button (ESC, 4 on Figure 23) is pressed for more than 1 second, this information screen will be returned to previous screen.

NOTE: *When "YES" (↵, 3 on Figure 23) button is pressed, operation hours will reset.*
At this time, resetting signal will be displayed and the screen will move to previous menu after resetting.

NOTE: *When "NO" (ESC, 4) button is pressed, the screen will recover to previous menu without resetting.*

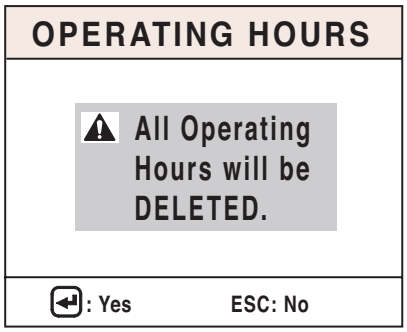

FG000579

Figure 45

Machine Operation Info Screen

1. If you press the YES" (↵, 3 on Figure 23) button, password entrance screen appears.

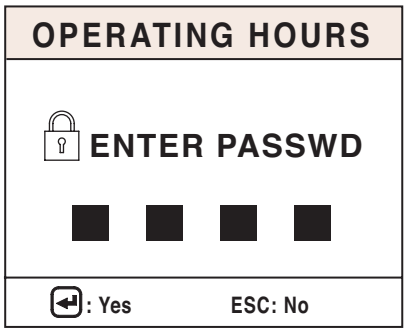

FG000576

Figure 46

2. When right password is input, machine operation periods will be deleted and Reset Completed screen will appear 3 seconds.

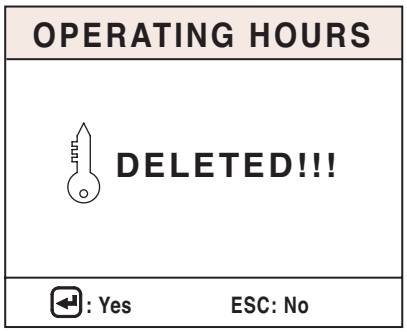

FG000577

Figure 47

3. If you press the "NO" (ESC, 4) button, the previous screen appears without resetting operation periods.

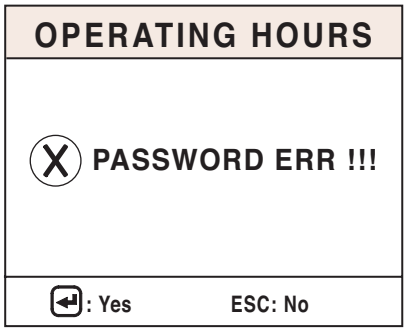

FG001086

Figure 48

ELECTRONIC HYDRAULIC CONTROL SYSTEM (e-EPOS)

Control System Schematic

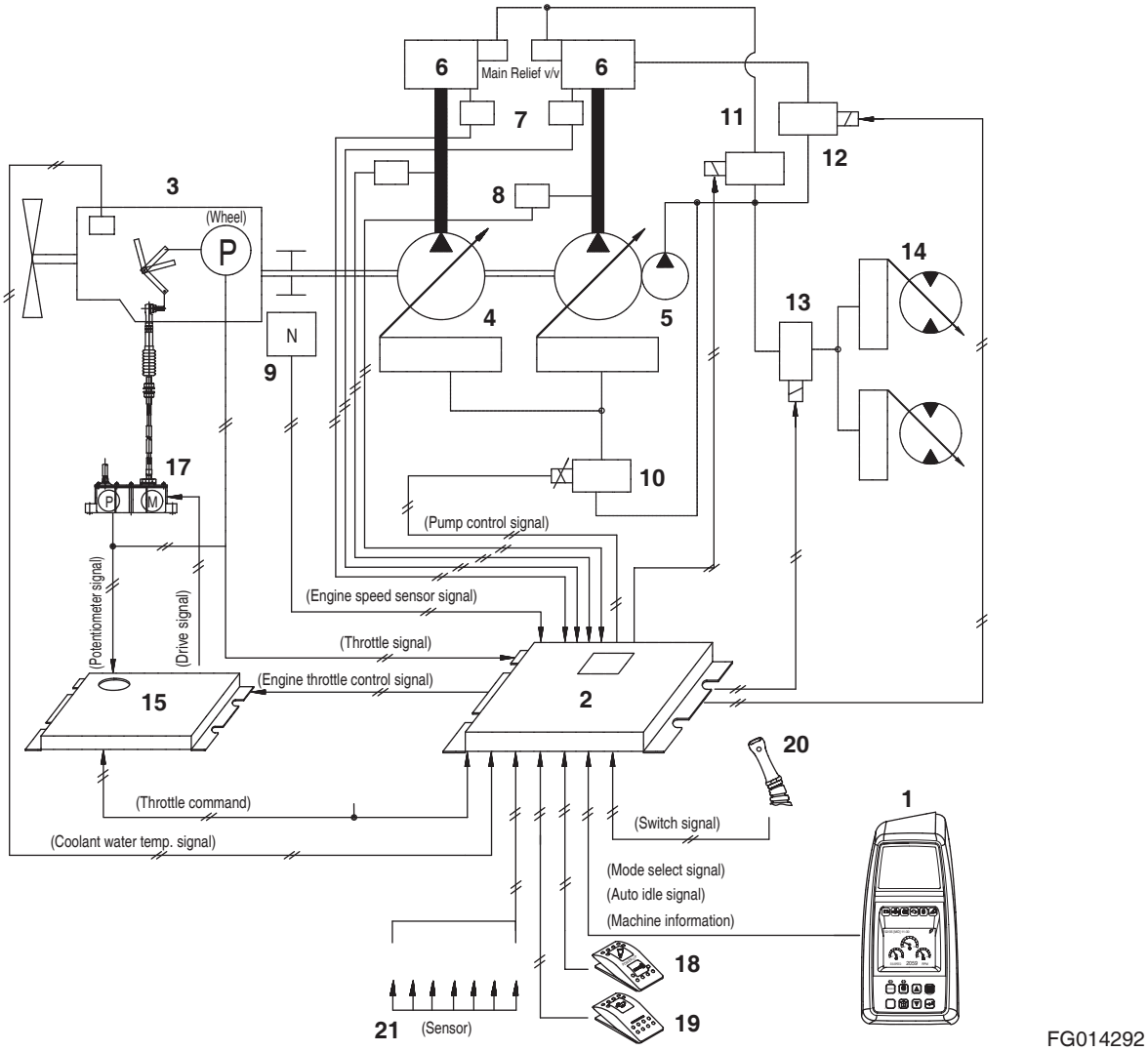

Figure 49

Reference Number	Description
1	Instrument Panel
2	e-EPOS Controller
3	Engine
4	Main Pump
5	Aux Pump
6	Control Valve
7	Pressure Switch
8	Pump Pressure Sensor
9	Engine Speed Sensor
10	Electromagnetic Proportional Pressure Reducing Valve
11	Solenoid Valve (Boost)

Reference Number	Description
12	Solenoid Valve (Swing Priority)
13	Solenoid Valve (High Speed)
14	Travel Motor
15	Engine Throttle Controller
16	Engine Control Dial
17	Engine Control Motor
18	Breaker/Boost/Shear Selector Switch
19	Auto Travel Selector Switch
20	Boost Switch (Right Work Lever)
21	Sensor

POWER MODE CONTROL

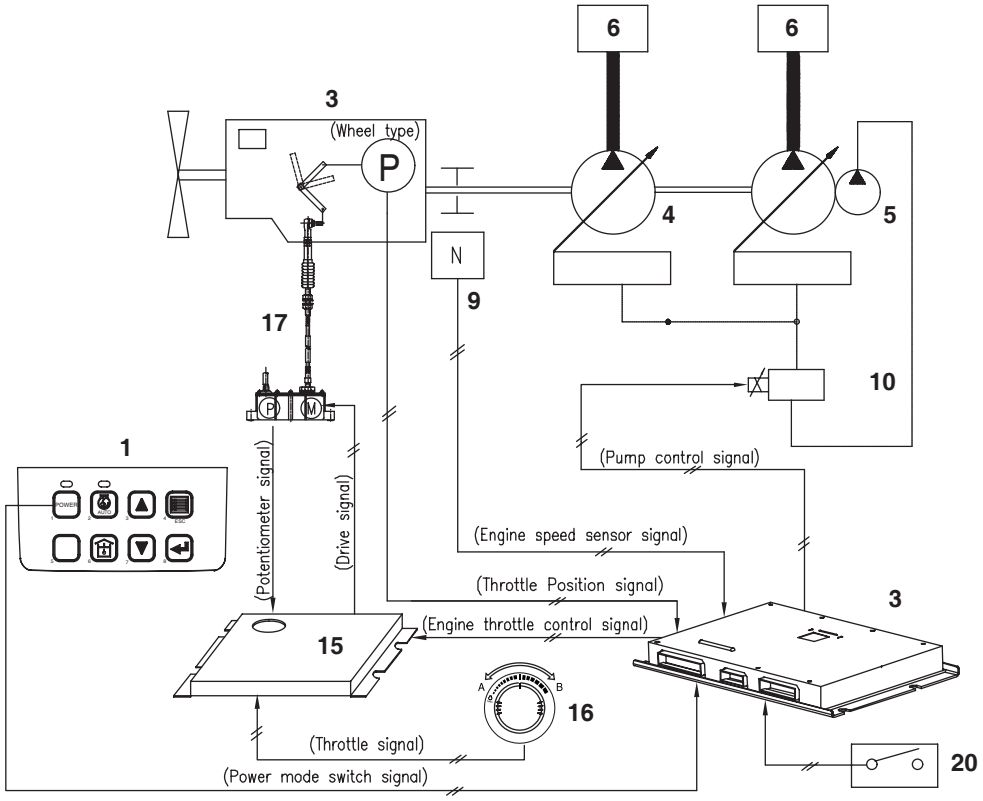

FG014334

Figure 50

Reference Number	Description
1	Instrument Panel (Power Mode Selector Switch)
2	e-EPOS Controller
3	Engine
4	Main Pump
5	Aux Pump
6	Control Valve

Reference Number	Description
9	Engine Speed Sensor
10	Electromagnetic Proportional Pressure Reducing Valve
15	Engine Throttle Controller
16	Engine Control Dial
17	Engine Control Motor
20	Work/Travel Selector Switch (Wheel type)

The power mode switch permits the selection of the appropriate engine power depending on the working condition. One of the two, Power Mode or Standard Mode, setting can be selected. When the engine starter switch is turned "ON," the power mode is automatically defaulted to standard mode. The desired mode can be selected by pressing the selector button on the instrument panel. When the power mode is selected, the indicator light will turn "ON" to display the selected mode.

The quantity of oil discharged by the pump and the engine speed are determined by the mode selected by the operator. The pump output in each mode is determined by the mode selection and is listed in the following table

Mode	**Standard Mode**	**Power Mode**
Output (%)	Approximately 85%	100%

1. Power Mode

This mode should be selected for high speed work. In this mode the engine output is most efficiently utilized due to the discharged oil volume being controlled based on the equivalent horsepower curve at various loaded pressures. The e-EPOS controller compares the target engine speed with the actual engine speed and controls the signal to the E.P.P.R. (Electromagnetic Proportional Pressure Reducing) valve which in turn varies the pump output quantity.

If the load increases, the engine speed will fall below the rated speed. When this occurs, the controller senses this decrease and immediately reduces the pump discharge volume to maintain the engine speed at the rated level.

On the other hand, if the load is decreased the controller increases the discharge volume of the pump to maintain the engine speed at the rated level.

By repeating these control operations, the engine speed is maintained at the rated speed so that maximum power can be generated.

In Power Mode, the e-EPOS controller receives engine speed signals from the engine control dial and the engine controller (ECU) and converts it to an operating signal current and is then transferred to the pump's E.P.P.R valve. At this time the E.P.P.R. valve converts the electric signal to the corresponding control pressure and sends it to the two pumps, adjusting the pump discharge volume to the desired level.

ARO0260L

Figure 51

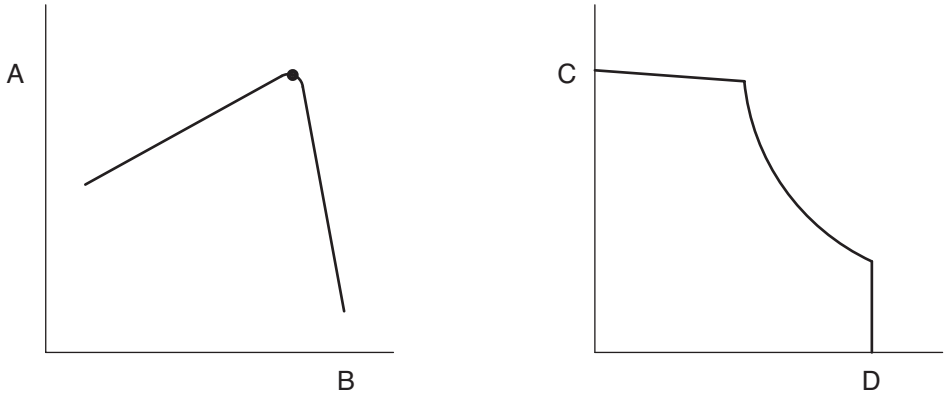

FG000580

Figure 52

Reference Number	Description
A	Engine Horsepower (hp)
B	Engine Speed (rpm)
C	Pump Discharge Volume (lpm)

Reference Number	Description
D	Pump Discharge Pressure (kg/cm^2)

2. Standard Mode

Standard Mode is used for general work. When this mode is selected it will reduce noise and fuel consumption in comparison with Power Mode. The current to the E.P.P.R. valve is shut off and pump discharge volume is controlled by pump regulator.

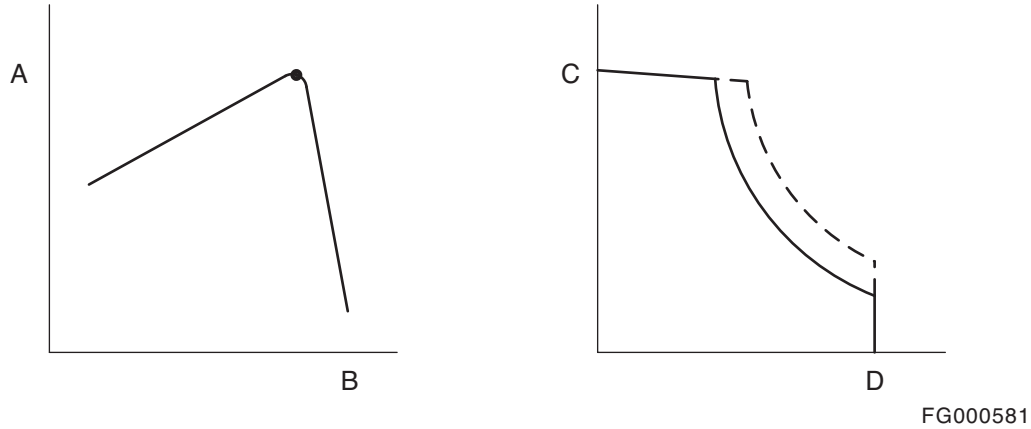

Figure 53

Reference Number	Description
A	Engine Horsepower (hp)
B	Engine Speed (rpm)
C	Pump Discharge Volume (lpm)

Reference Number	Description
D	Pump Discharge Pressure (kg/ cm^2)

3) Operation in case of failure in the control system (Aux mode operation

Though it is impossible to control current of the E.P.P.R (Electromagnetic Proportional Pressure Reducing) Valve controlling the discharge volume of pump due to fault in control system, the machine can be operated in the aux mode.

Upon turning "ON" the aux mode switch, the E.P.P.R Valve controlling the discharge volume of pump comes into contact with the aux mode resistor to let current of a certain value flow. At this time, the discharge volume of pump follow the control by the pump regulator, nearly at quantity roughly similar to that in the standard mode.