CATERPILLAR®

RENR9855-02
March 2008

Schematic

C32 Generator Set with EMCP 3 Electrical System

SXC1-UP
WDR1-UP

Volume 1 of 2: Controller and Interconnections

©2008 Caterpillar
All Rights Reserved

Printed in U.S.A.

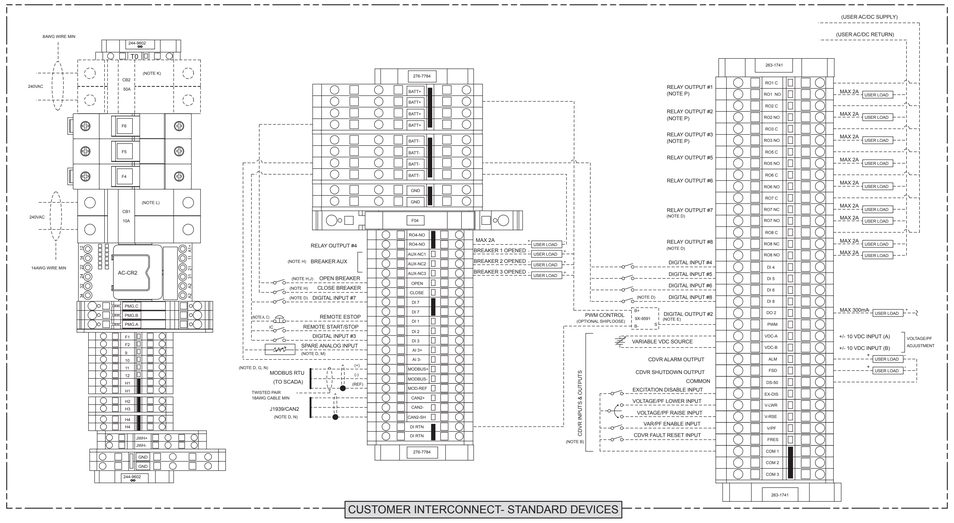

CUSTOMER INTERCONNECT- STANDARD DEVICES

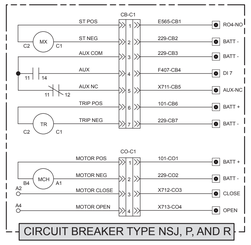

CIRCUIT BREAKER TYPE NSJ, P, AND R

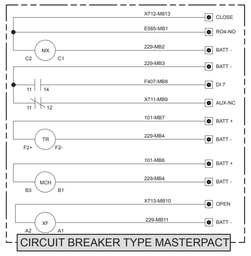

CIRCUIT BREAKER TYPE MASTERPACT

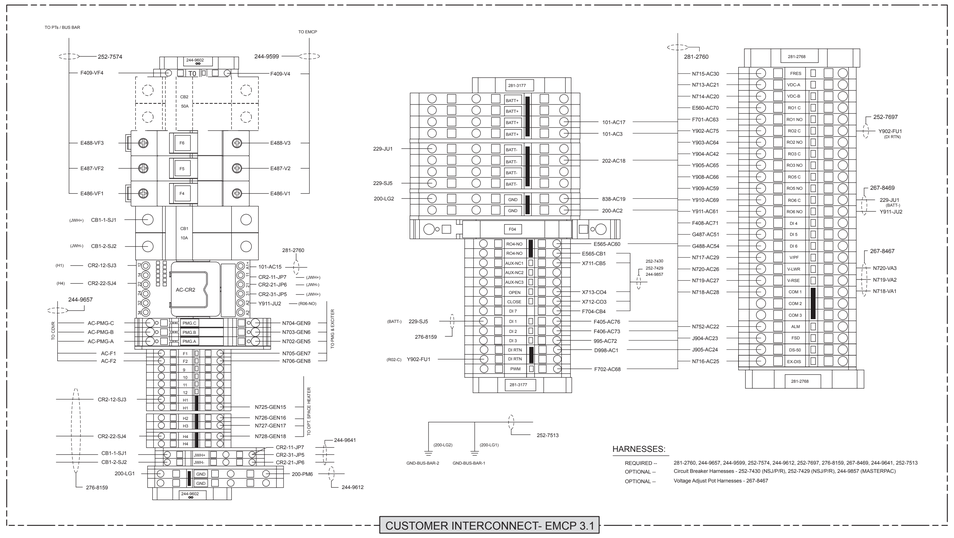

CUSTOMER INTERCONNECT- EMCP 3.1

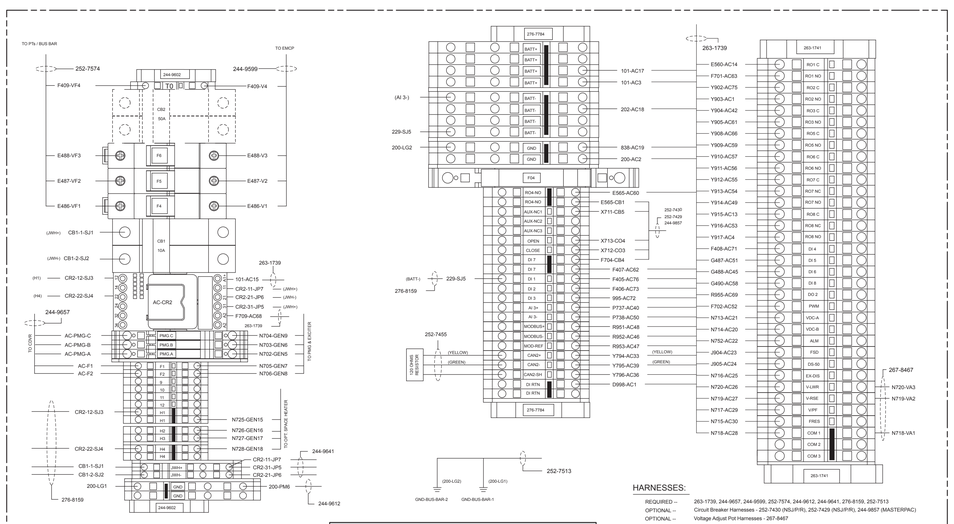

CUSTOMER INTERCONNECT- EMCP 3.2 AND 3.3

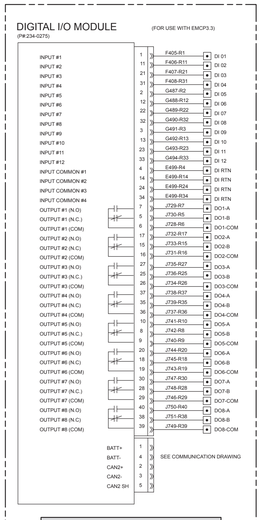

OPTIONAL DIGITAL I/O MODULES

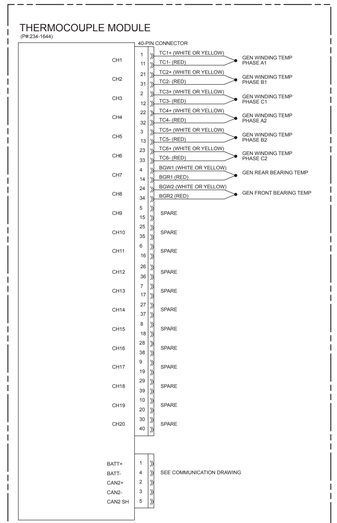

OPTIONAL THERMOCOUPLE MODULES

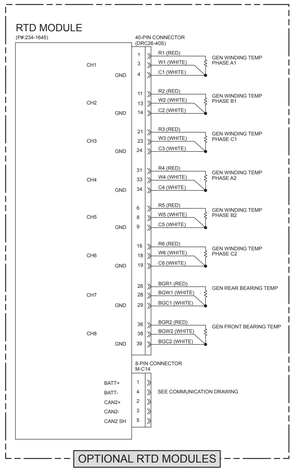

OPTIONAL RTD MODULES

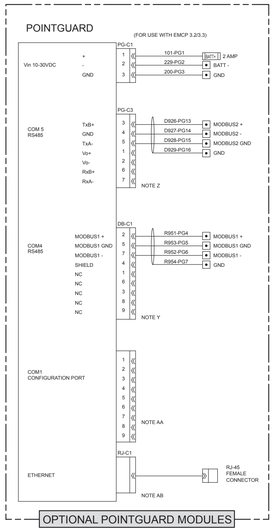

OPTIONAL POINTGUARD MODULES

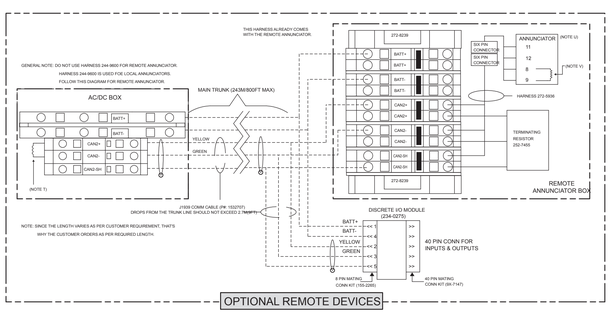

OPTIONAL REMOTE DEVICES

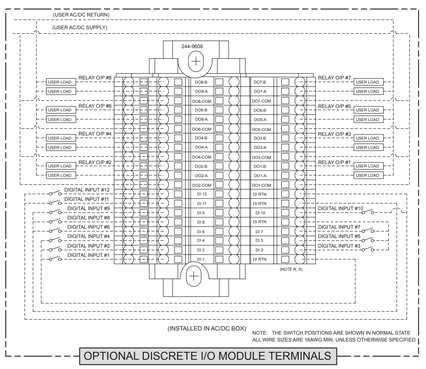

OPTIONAL DISCRETE I/O MODULE TERMINALS

RENR9855-02 VOL 1 of 2
30 Page, (Dimensions: 39 inches x 28 inches)

RENR9855-02 VOL 1 of 2

30 Page, (Dimensions: 39 inches x 28 inches)

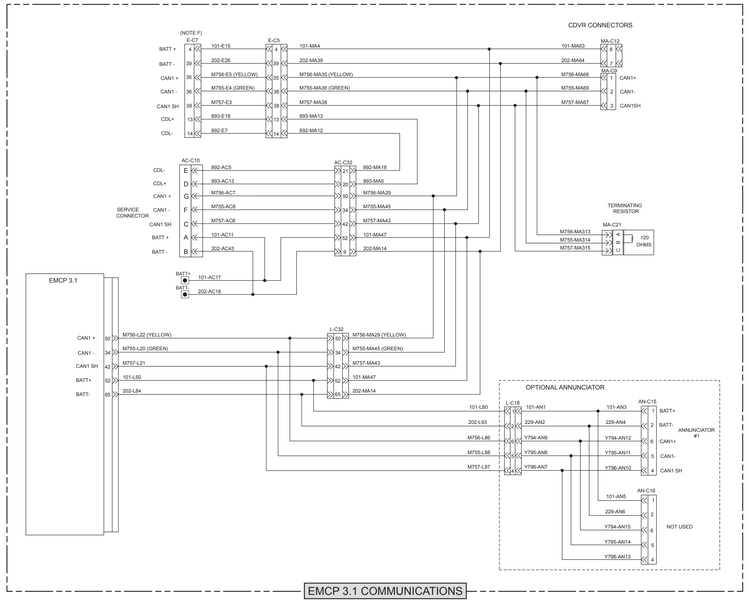

EMCP 3.1 COMMUNICATIONS

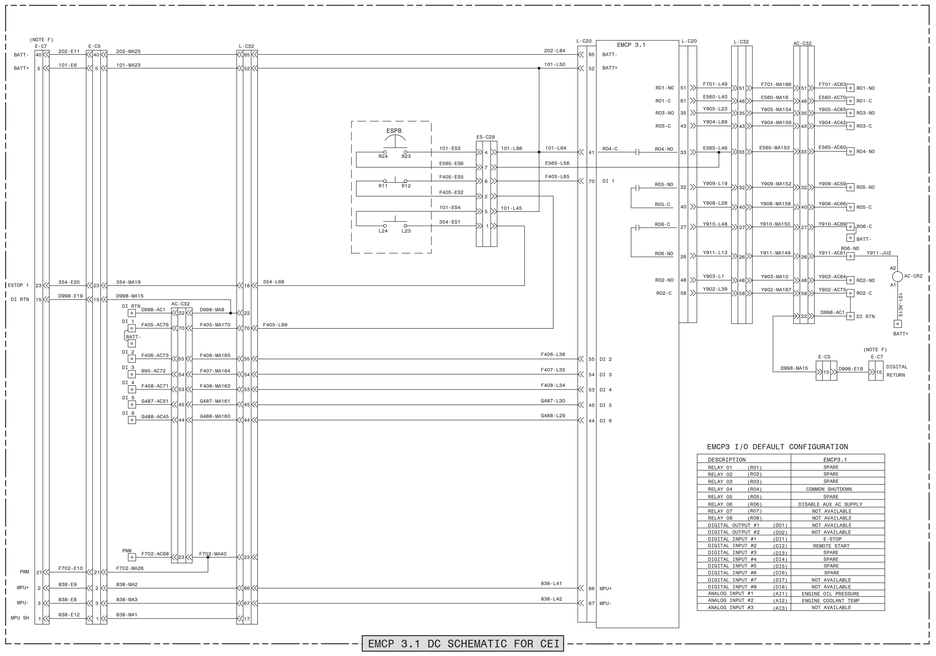

EMCP 3.1 DC SCHEMATIC FOR CEI

EMCP3 I/O DEFAULT CONFIGURATION

DESCRIPTION		EMCP3_1
RELAY 01	(R01)	SPARE
RELAY 02	(R02)	SPARE
RELAY 03	(R03)	SPARE
RELAY 04	(R04)	COMMON SHUTDOWN
RELAY 05	(R05)	SPARE
RELAY 06	(R06)	DISABLE AUX AC SUPPLY
RELAY 07	(R07)	NOT AVAILABLE
RELAY 08	(R08)	NOT AVAILABLE
DIGITAL OUTPUT #1	(DO1)	NOT AVAILABLE
DIGITAL OUTPUT #2	(DO2)	NOT AVAILABLE
DIGITAL INPUT #1	(DI1)	E-STOP
DIGITAL INPUT #2	(DI2)	REMOTE START
DIGITAL INPUT #3	(DI3)	SPARE
DIGITAL INPUT #4	(DI4)	SPARE
DIGITAL INPUT #5	(DI5)	SPARE
DIGITAL INPUT #6	(DI6)	SPARE
DIGITAL INPUT #7	(DI7)	NOT AVAILABLE
DIGITAL INPUT #8	(DI8)	NOT AVAILABLE
ANALOG INPUT #1	(AI1)	ENGINE OIL PRESSURE
ANALOG INPUT #2	(AI2)	ENGINE COOLANT TEMP
ANALOG INPUT #3	(AI3)	NOT AVAILABLE

SYMBOLS

- STANDARD WIRING
- CUSTOMER WIRING
- SHIELDED WIRE
- RELAY CONTACT (NORMALLY OPEN)
- RELAY CONTACT (NORMALLY CLOSED)
- GENERATOR FRAME (CHASSIS) GROUND
- EARTH GROUND
- LAMP
- FUSE
- RELAY COIL
- EMERGENCY STOP PUSH BUTTON
- 2 POSITION SWITCH
- 3 POSITION SWITCH
- SHUNT TRIP
- SHUNT CLOSE
- TRIP UNIT
- CHARGING MOTOR
- CIRCUIT BREAKER
- CURRENT TRANSFORMER
- EXCITER
- RESISTIVE SENDER
- VARIABLE VOC SOURCE
- DC TERMINAL
- AC TERMINAL
- CONNECTOR

ABBREVIATIONS

AC	ALTERNATING CURRENT
AFCR	AUXILIARY FUEL CONTROL RELAY
AFTS	AUTOMATIC FUEL TRANSFER SYSTEM
ALM	ALARM MODULE
ALR	ALARM RELAY
ALT	ALTERNATOR
ASR	AIR SHUT-OFF RELAY
ATB	AC TRANSFORMER BOX
ATR	ALTERNATOR TEMPERATURE RELAY
ATS	AUTOMATIC TRANSFER SWITCH
AUX	AUXILIARY
BATT	BATTERY
BC	BATTERY CHARGER
BCF	BATTERY CHARGER FAILURE SWITCH
BTR	BEARING TEMPERATURE RELAY
CAM	CUSTOM ALARM MODULE
CB	CIRCUIT BREAKER
CCM	CUSTOMER COMMUNICATION MOUULE
CDL	CAT DATA LINK
CDVR	DIGITAL VOLTAGE REGULATOR
CIM	CUSTOMER INTERFACE MODULE
CONG2	CONTACT SENSE COMMON
CONN	CONNECTOR
CR	CRANK RELAY
CSFS	CURRENT SCROLL FUEL SYSTEM
CT	CURRENT TRANSFORMER
CTR	CRANK TERMINATION RELAY
D	DIODE
DC	DIRECT CURRENT
ECLS	ENGINE COOLANT LOSS SENSOR
ECS	ENGINE CONTROL SWITCH
ECTS	ENGINE COOLANT TEMPERATURE SENSOR
EFCR	EMERGENCY FUEL CONTROL RELAY
EFCR	ENGINE FAILURE RELAY
EFR	ENGINE FAILURE RELAY
EG	ELECTRONIC GOVERNOR (SPEED SENSING)
EGA	ELECTRONIC GOVERNOR ACTUATOR
EGR	ELECTRONIC GOVERNOR RELAY
ELS	ENCLOSURE LIGHT SWITCH
EMSR	EMERGENCY STOP RELAY
ENFR	ENGINE FAILURE RELAY
EOPS	ENGINE OIL PRESSURE SENSOR
EOTS	ENGINE OIL TEMPERATURE SENSOR
ESDR	ENGINE SHUTDOWN RELAY
ESPB	EMERGENCY STOP PUSH BUTTON
ESTS	EMERGENCY STOP SWITCH ON ENCLOSURE
EXC	EXCITER
F	FUSE
FCR	FUEL CONTROL RELAY
FCS	FUEL CONTROL SOLENOID
FCTM	FUEL CONTROL TIMER MODULE
FPT	FUEL PUMP TIMER
FRBS	FUEL RUPTURE BASIN SWITCH
FRES	FAULT RESET
FS	FUEL SOLENOID
FSOS	FUEL SHUT-OFF SOLENOID
FTSPR	FUEL TRANSFER SYSTEM PUMP RELAY
GEN	GENERATOR
GFR	GENSET FAULT RELAY
GND	GROUND
GNDFCT	GROUND FAULT CT
GNDFR	GROUND FAULT RELAY
GOV	GOVERNOR
GRR	GENERATOR RUN RELAY
GS	GOVERNOR SWITCH
GSC	GENERATOR SET CONTROL
GSM	GOVERNOR SYNCHRONIZING MOTOR
HC	HEATER CONTACTOR
IC	REMOTE START/STOP INITIATE CONTACT
IRR	IDLE RATED RELAY
IRS	IDLE RATED SWITCH
KWR	KILOWATT RELAY
L	LOAD LEADS
LFLS	LOW FUEL LEVEL SWITCH
LSM	LOAD SHARE MODULE
LV	LOW VOLTAGE
LWR	CONTACT SENSE LOWER
MAN	MANUAL
MAX	MAXIMUM
MCS	MODE CLEAR SWITCH
MIN	MINIMUM
MPU	MAGNETIC SPEED PICKUP
MV	MEDIUM VOLTAGE
NC	NORMALLY CLOSED
NIAR	NOT IN AUTO RELAY
ND	NORMALLY OPEN
OUVR	OVER/UNDER VOLTAGE RELAY
PB	PUSHBUTTON
PC	PUMP CONTACTOR
PCB	PRINTED CIRCUIT BOARD
PEEC	PROGRAMMABLE ELECTRONIC ENGINE CONTROL
PEECR	PEEC RELAY
PF	POWER FACTOR
PL	PANEL ILLUMINATION LIGHT
PLS	PANEL LIGHT SWITCH
PM	PERMANENT WAGNET
PMG	PERMANENT WAGNET GENERATOR
POT	POTENTIOMETER
PR	PUMP RELAY
PRL	PUMP RUN LIGHT
PRPB	PUMP RUN PUSHBUTTON
PS	PINION SOLENOID
PSL	PUMP STOP LIGHT
PSPB	PUMP STOP PUSHBUTTON
PWM	PULSE WIDTH MODULATED
RAN	REMOTE ANNUNCIATOR
RDM	RELAY DRIVER MODULE
REF	REFERENCE
RFI	RADIATED FREQUENCY IMMUNITY
RHLH	RIGHT HAND/LEFT HAND SWITCH
RR	RUN RELAY
RSE	CONTACT SENSE RAISE
SASV	START AID SOLENOID VALVE
SATS	START AID TEMPERATURE SWITCH
SAS	START AID SWITCH
SCS	SCROLL SWITCH
SEC	SECOND
SHTC	CIRCUIT BREAKER SHUNT TRIP COIL
SL	SYNCHRONIZING LIGHT
SLR	SYNCHRONIZING LIGHT RESISTOR
SM	STARTING MOTOR
SMMS	STARTING MOTOR MAGNETIC SWITCH
SMR	STARTING MOTOR RELAY
SP	SPEED ADJUST POTENTIOMETER
SS	SYNCHRONIZING SWITCH
T	GENERATOR LINE LEADS
TERM	TERMINATING
TSC	TRANSFER SWITCH POSITION INDICATING CONTACT
TX	TRANSFORMER
VAR	VOLTAGE ADJUST RHEOSTAT
VAS	VOLTAGE ADJUST SWITCH
VR	VOLTAGE REGULATOR

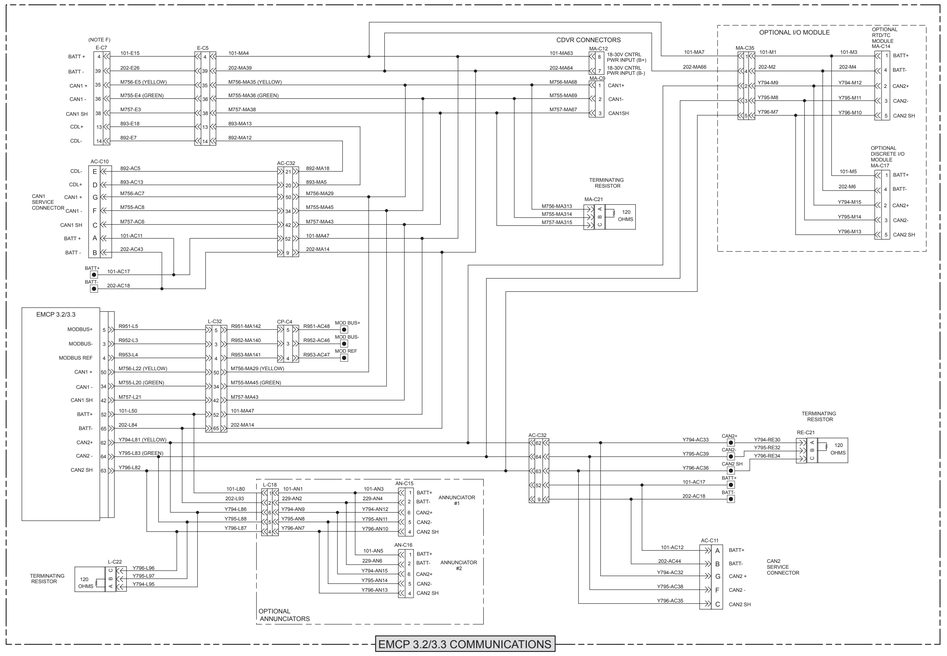

EMCP 3.2/3.3 COMMUNICATIONS

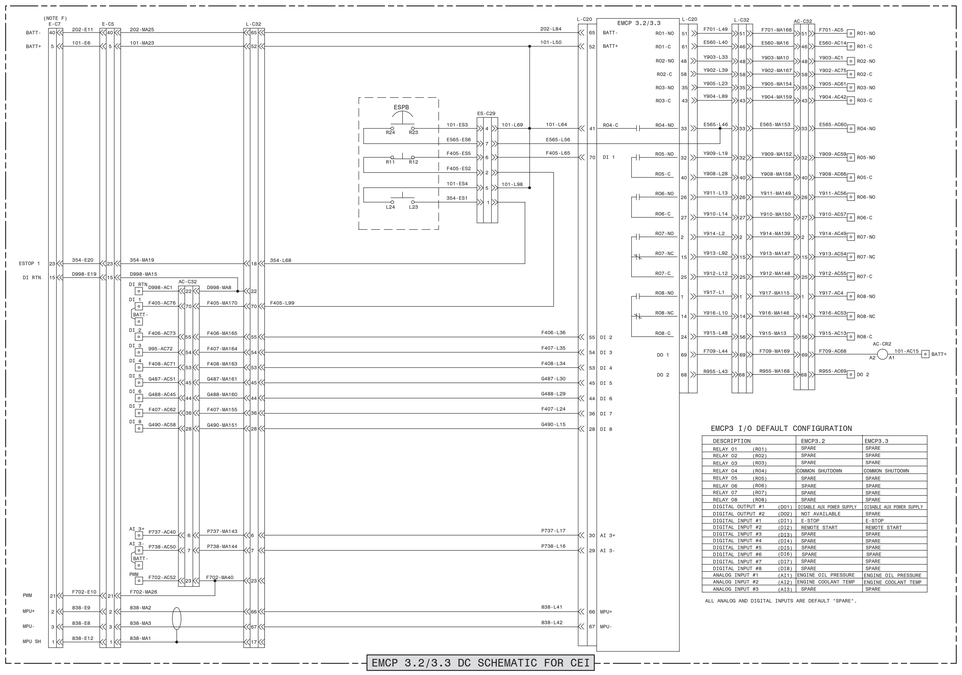

EMCP 3.2/3.3 DC SCHEMATIC FOR CEI

EMCP3 I/O DEFAULT CONFIGURATION

DESCRIPTION		EMCP3_2	EMCP3_3
RELAY 01	(R01)	SPARE	SPARE
RELAY 02	(R02)	SPARE	SPARE
RELAY 03	(R03)	SPARE	SPARE
RELAY 04	(R04)	COMMON SHUTDOWN	COMMON SHUTDOWN
RELAY 05	(R05)	SPARE	SPARE
RELAY 06	(R06)	SPARE	SPARE
RELAY 07	(R07)	SPARE	SPARE
RELAY 08	(R08)	SPARE	SPARE
DIGITAL OUTPUT #1	(DO1)	DISABLE AUX POWER SUPPLY	DISABLE AUX POWER SUPPLY
DIGITAL OUTPUT #2	(DO2)	NOT AVAILABLE	SPARE
DIGITAL INPUT #1	(DI1)	E-STOP	E-STOP
DIGITAL INPUT #2	(DI2)	REMOTE START	REMOTE START
DIGITAL INPUT #3	(DI3)	SPARE	SPARE
DIGITAL INPUT #4	(DI4)	SPARE	SPARE
DIGITAL INPUT #5	(DI5)	SPARE	SPARE
DIGITAL INPUT #6	(DI6)	SPARE	SPARE
DIGITAL INPUT #7	(DI7)	SPARE	SPARE
DIGITAL INPUT #8	(DI8)	SPARE	SPARE
ANALOG INPUT #1	(AI1)	ENGINE OIL PRESSURE	ENGINE OIL PRESSURE
ANALOG INPUT #2	(AI2)	ENGINE COOLANT TEMP	ENGINE COOLANT TEMP
ANALOG INPUT #3	(AI3)	NOT AVAILABLE	SPARE

ALL ANALOG AND DIGITAL INPUTS ARE DEFAULT "SPARE".

DIAGRAM NOTES

NOTE A: SEE RENR7902 TO PROGRAM EMCP INPUTS AND OUTPUTS.
DIGITAL INPUT DI 1 IS DEDICATED TO EMERGENCY STOP
DIGITAL INPUT DI 2 IS DEDICATED TO REMOTE START/STOP
NOTE B: SEE RENR7941 FOR CDVR INPUTS, OUTPUTS AND SETTINGS
NOTE C: REMOVE THE EXISTING JUMPER "229-SJ5" FROM BATT- TO WIRE UP THE REMOTE ESTOP
NOTE D: EMCP3.3/3.2 ONLY
NOTE E: EMCP3.3 ONLY
NOTE F: ENGINE 40 PIN CONNECTOR INTERFACE
NOTE G: SEE LEBE5255 FOR MODBUS APPLICATIONS
NOTE H: FOR USE WITH OPTIONAL ELECTRICALLY OPERATED BREAKER INSTALLED
NOTE J: SIGNAL TO OPEN THE BREAKER NORMALLY. FAULT TRIP IS ISSUED BY EMCP3
NOTE K: OPTIONAL CIRCUIT BREAKER WITH JACKET WATER HEATER
NOTE L: STANDARD CIRCUIT BREAKER FOR GENERATOR HEATER
NOTE M: RESISTIVE SENDER - USE 191-5587 TEMPERATURE SENSOR OTHERWISE CONSULT FACTORY
NOTE N: SEE "CUSTOMER INTERCONNECT-OPT DEVICES" FOR CONNECTION TO REMOTE DEVICES
NOTE P: DEDICATED OUTPUTS:
RELAY OUTPUT #6 - RO6: DEDICATED TO AUX RELAY "AC-CR2" (CEI ENGINE, EMCP 3.1 ONLY)
DIGITAL OUTPUT #1 - DO 1: DEDICATED TO AUX RELAY "AC-CR2" (EMCP 3.2 &3.2 ONLY)
NOTE R: ALL THE "DI RTN" ARE JUMPERED TOGETHER AND THEN TIED BACK TO THE BATT-
NOTE S: SEE RENR7902 TO PROGRAM DISCRETE I/O MODULE INPUTS & OUTPUTS
NOTE T: REMOVE THE 120 OHM RESISTOR CONNECTED B/W TERMINALS CAN2+ & CAN2- BEFORE ADDING CABLE
NOTE U: 236-1158 (WITHOUT FILM) REQUIRES FILM KIT 2B06898
236-1159 (INCLUDES STD FILM)
252-7504 (FLUSH MOUNT BOX ASSEMBLY INCLUDES 236115B)
NOTE V: ADD 120 OHM RESISTOR TO THE END-OF-THE-LINE DEVICE AFTER REMOVING FROM THE OTHER END
NOTE W: THE REAR, LEFT AND RIGHT SIDES ARE BASED ON CUSTOMER PREFERENCE FOR LOCATION OF CONTROLS
NOTE X: PTs ARE USED IN MV (MEDIUM VOLTAGE), BUT IN CASE OF LV (LOW VOLTAGE)
IT IS DIRECT SENSING. SEE SHEET 9 FOR MV WIRING.
NOTE Y: 9-PIN CONNECTOR OF DB-9 TYPE FOR MODBUS RS485 COMMUNICATION TO EMCP3.
NOTE Z: 7-PIN CONNECTOR FOR MODBUS RS485 COMMUNICATION TO SWITCHGEAR & ATS.
NOTE AA: CONFIGURATION PORT. REQUIRES NULL MODEM FOR COMMUNICATIONS.
NOTE AB: ETHERNET PORT FOR CONFIGURATION & MONITORING.
NOTE AC: CONFIGURED BUT NOT USED, AVAILABLE TO BE USED.
NOTE AE: WHEN ENGINE IS RUNNING EMCP ENERGIZES THE RELAY "AC-CR2"
TO DISABLE THE AC POWER

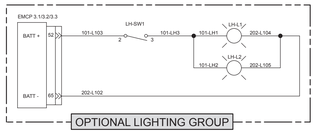

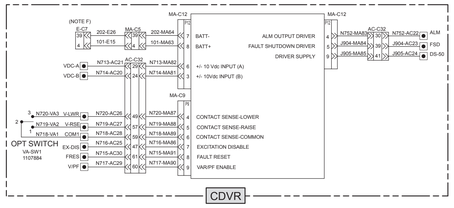

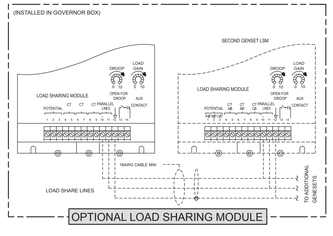

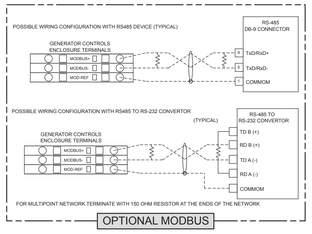

THIS DIAGRAM IS FOR THE C32 GENERATOR SET WITH EMCP 3.1, 3.2, AND 3.3 CONTROLLERS. (SXC1-UP, WDR1-UP)
DIAGRAM- 292-4084 CHO3 DIAGRAM WIRING (CEI)

REFER TO THE APPROPRIATE SERVICE MANUAL FOR TROUBLESHOOTING SPECIFICATIONS AND SYSTEM OPERATIONS.

DASH FONT INDICATES AN ATTACHMENT COMPONENT DASH FONT INDICATES AN ATTACHMENT COMPONENT OR HARNESS.

CUSTOMER WIRING AND OPTIONAL FEATURE WIRING SHOWN ARE RECOMMENDED.

ELIMINATION OF ANY COMPONENTS SHOWN WILL DISABLE CERTAIN FEATURES.

CONTACT CATERPILLAR ENGINEERING WHEN CONSIDERING COMPONENT REMOVAL.

NO ADDITIONAL CONNECTIONS ARE ALLOWED TO ANY WIRES WITHOUT CATERPILLAR ENGINEERING APPROVAL.

CATERPILLAR®

RENR9855-02
March 2008

Schematic

C32 Generator Set with EMCP 3 Electrical System

SXC1-UP
WDR1-UP

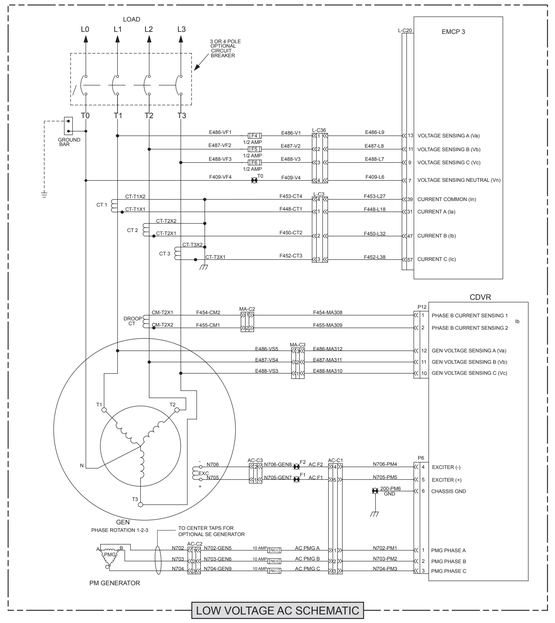

LOW VOLTAGE AC SCHEMATIC

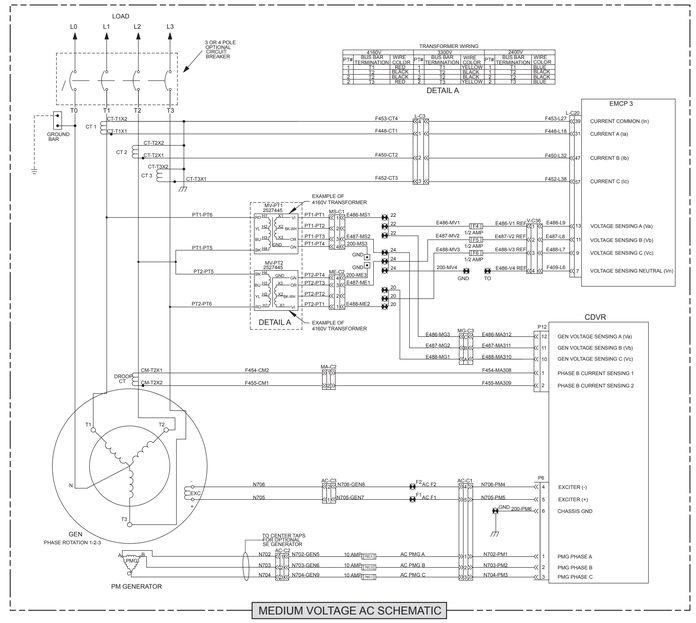

MEDIUM VOLTAGE AC SCHEMATIC

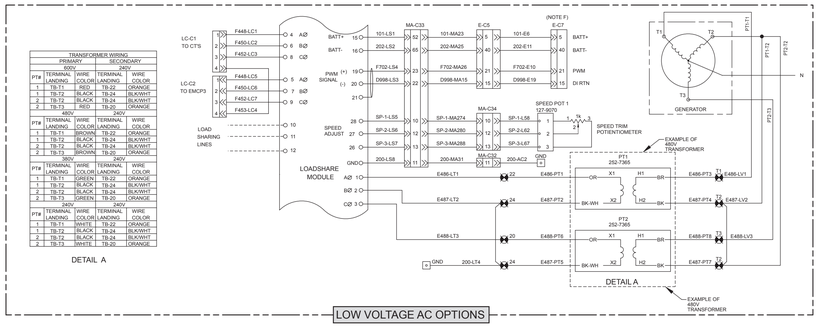

LOW VOLTAGE AC SCHEMATIC

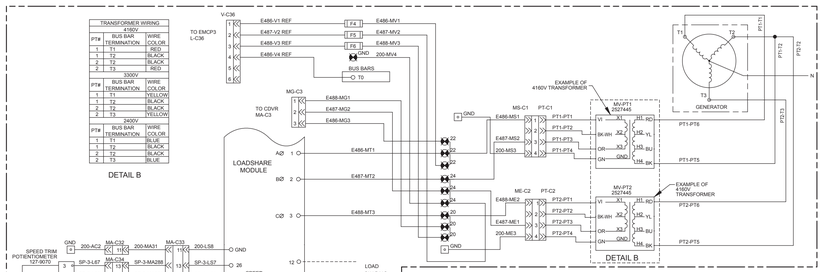

MEDIUM VOLTAGE AC OPTIONS

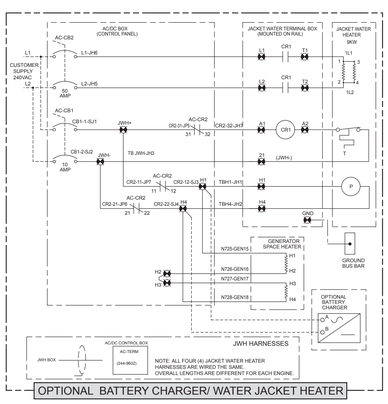

OPTIONAL BATTERY CHARGER/ WATER JACKET HEATER

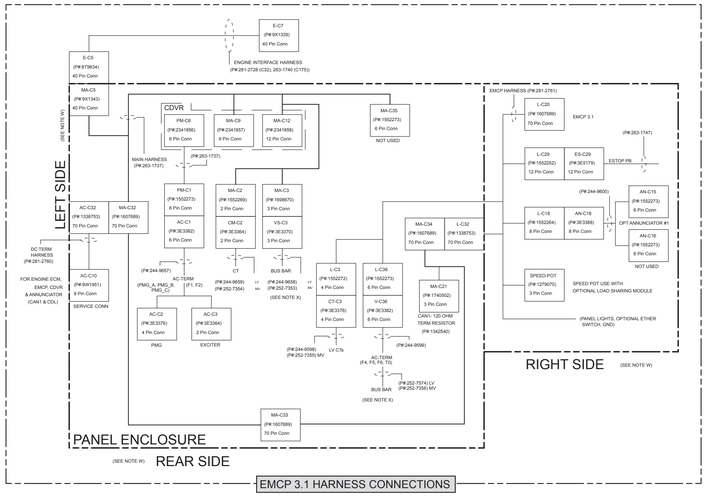

EMCP 3.1 HARNESS CONNECTIONS

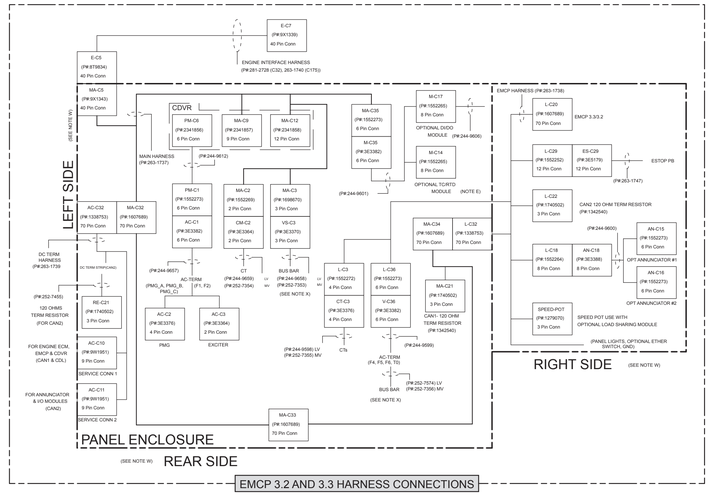

EMCP 3.2 AND 3.3 HARNESS CONNECTIONS

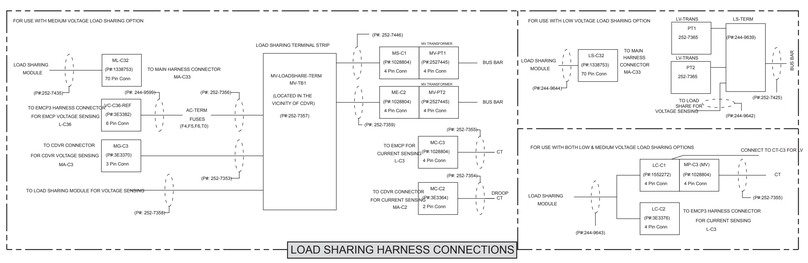

LOAD SHARING HARNESS CONNECTIONS

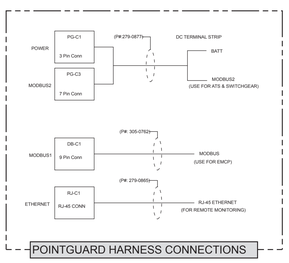

POINTGUARD HARNESS CONNECTIONS

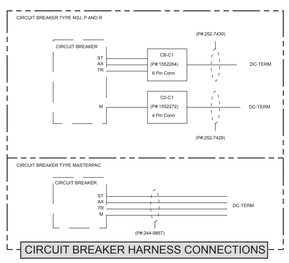

CIRCUIT BREAKER HARNESS CONNECTIONS

Harness And Wire Symbols

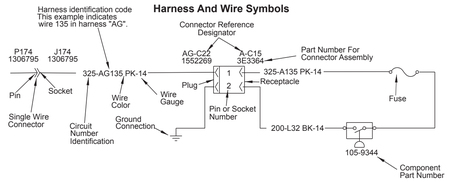

Related Electrical Service Manuals	
Title	Form Number
Troubleshooting	RENR9348
Systems Operation / Testing and Adjusting	RENR9968

Volume 2 of 2: Engine and AC Schematics

©2008 Caterpillar
All Rights Reserved

Printed in U.S.A.

RENR9855-02 VOL 2 of 2
30 Page, (Dimensions: 39 inches x 28 inches)

RENR9855-02 VOL 2 of 2

30 Page, (Dimensions: 39 inches x 28 inches)

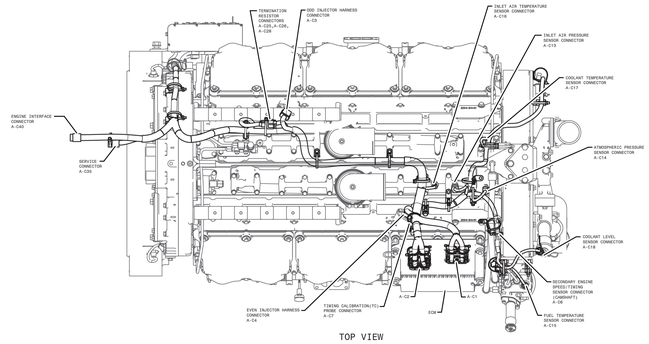

TOP VIEW

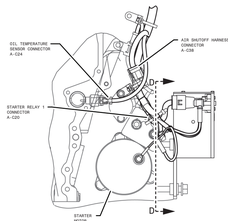

VIEW C-C

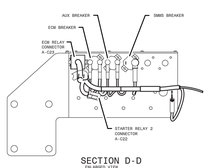

SECTION D-D

ENLARGED VIEW

VIEW A-A

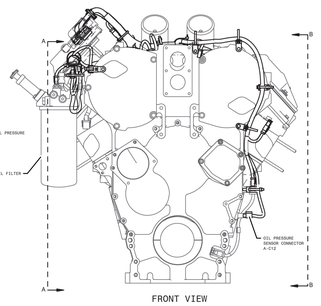

FRONT VIEW

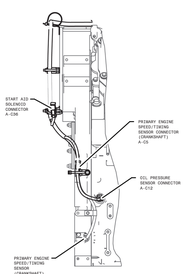

VIEW B-B

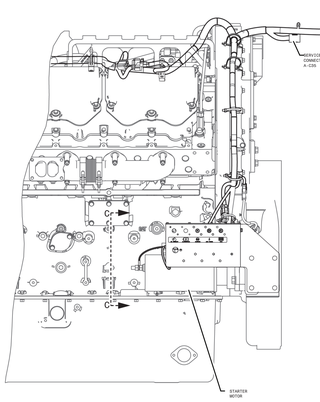

LEFT VIEW

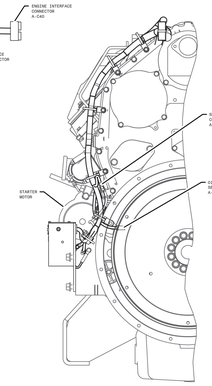

REAR VIEW

DIAGNOSTIC CODES

SPN/FMI	EID	CID	CONDITION
16-17	E390-1		Fuel Filter Restriction Warning
16-19	E390-2		Fuel Filter Restriction Derate
16-01	E390-3		Fuel Filter Restriction Shutdown
91-08		91-08	Throttle Position signal abnormal
94-03		94-03	Fuel Pressure open/short to +batt.
94-04		94-04	Fuel Pressure short to ground
94-15	E096-1		High Fuel Pressure Warning
94-16	E096-2		High Fuel Pressure Derate
94-00	E096-3		High Fuel Pressure Shutdown
94-17	E198-1		Low Fuel Pressure Warning
94-18	E198-2		Low Fuel Pressure Derate
94-01	E198-3		Low Fuel Pressure Shutdown
100-03		100-03	Engine Oil Pressure open/short to +batt
100-04		100-04	Engine Oil Pressure short to ground
100-10		100-10	Engine Oil Pressure Sensor abnormal rate of change
100-17	E360-1		Low Engine Oil Pressure Warning
100-01	E360-3		Low Engine Oil Pressure Shutdown
108-03		274-03	Atmospheric Pressure open/short to +batt
108-04		274-04	Atmospheric Pressure short to ground
110-03		110-03	Engine Coolant Temperature open/short to +batt
110-04		110-04	Engine Coolant Temperature short to ground
110-15	E361-1		High Engine Coolant Temperature Warning
110-16	E361-2		High Engine Coolant Temperature Derate
110-00	E361-3		High Engine Coolant Temperature Shutdown
111-17	E059-1		Low Engine Coolant Level Warning
111-18	E057-2		Low Engine Coolant Level Derate
168-00		168-00	System Voltage High
168-01		168-01	System Voltage Low
168-02		168-02	System Voltage Intermittent/erratic
172-03		172-03	Intake Manifold Air Temperature open/short to +batt
172-04		172-04	Intake Manifold Air Temperature short to ground
174-03		174-03	Fuel Temperature open/short to +batt
174-04		174-04	Fuel Temperature short to ground
174-15	E363-1		High Fuel Temperature Warning
174-16	E363-2		High Fuel Temperature Derate
174-00	E363-3		High Fuel Temperature Shutdown
175-03		175-03	Engine Oil Temperature open/short to +batt
175-04		175-04	Engine Oil Temperature short to ground
175-0	E197-3		High Engine Oil Temperature shutdown
175-15	E197-1		High Engine Oil Temperature Warning
175-16	E197-2		High Engine Oil Temperature Derate
190-08		190-08	Engine Speed abnormal
190-15	E362-1		Engine Overspeed Warning
190-00	E362-3		Engine Overspeed Shutdown
228-11		261-11	Engine Timing Calibration invalid
228-13		261-13	Engine Timing Calibration required
234-02		253-02	Personality module mismatch
444-05		444-05	Start Relay open circuit
444-06		444-06	Start Relay short to ground
446-05		446-05	Air Shutoff Relay open
446-06		446-06	Air Shutoff Relay short
620-03		620-03	5 Volt Sensor DC Supply short to +batt
620-04		262-04	5 Volt Sensor DC Power Supply short to ground
651-05		1-05	Cylinder #1 Injector open circuit
651-06		1-06	Cylinder #1 short
652-05		2-05	Cylinder #2 Injector open circuit
652-06		2-06	Cylinder #2 short
653-05		3-05	Cylinder #3 Injector open circuit
653-06		3-06	Cylinder #3 short
654-05		4-05	Cylinder #4 Injector open circuit
654-06		4-06	Cylinder #4 short
655-05		5-05	Cylinder #5 Injector open circuit
655-06		5-06	Cylinder #5 short
656-05		6-05	Cylinder #6 Injector open circuit
656-06		6-06	Cylinder #6 short
657-05		7-05	Cylinder #7 Injector open circuit
657-06		7-06	Cylinder #7 short
658-05		8-05	Cylinder #8 Injector open circuit
658-06		8-06	Cylinder #8 short
659-05		9-05	Cylinder #9 Injector open circuit
659-06		9-06	Cylinder #9 short
660-05		10-05	Cylinder #10 Injector open circuit
660-06		10-06	Cylinder #10 short
661-05		11-05	Cylinder #11 Injector open circuit
661-06		11-06	Cylinder #11 short
662-05		12-05	Cylinder #12 Injector open circuit
662-06		12-06	Cylinder #12 short
723-08		342-08	Secondary Engine Speed signal abnormal
1111-02		268-02	Check Programmable Parameters
1785-03		1785-03	Intake Manifold Pressure Sensor voltage high
1785-04		1784-04	Intake Manifold Pressure Sensor voltage low

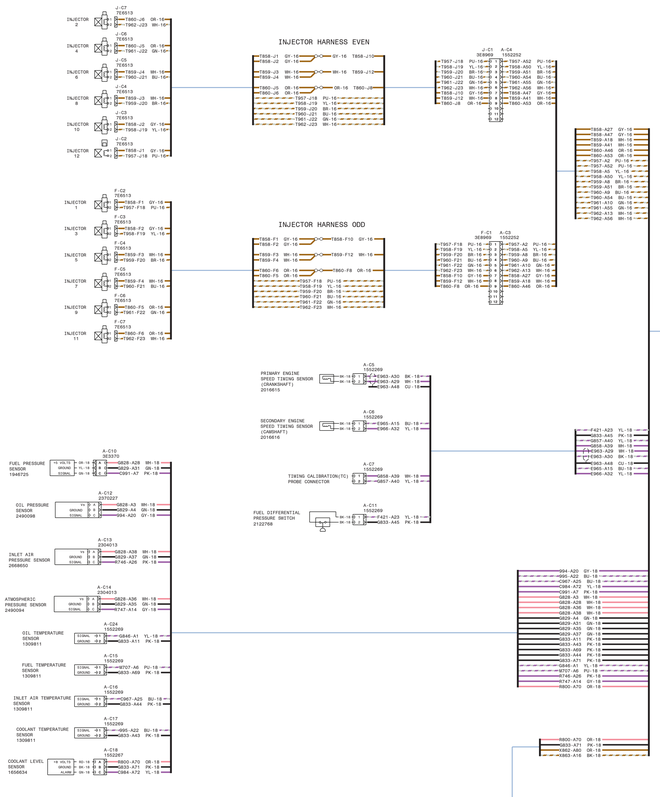

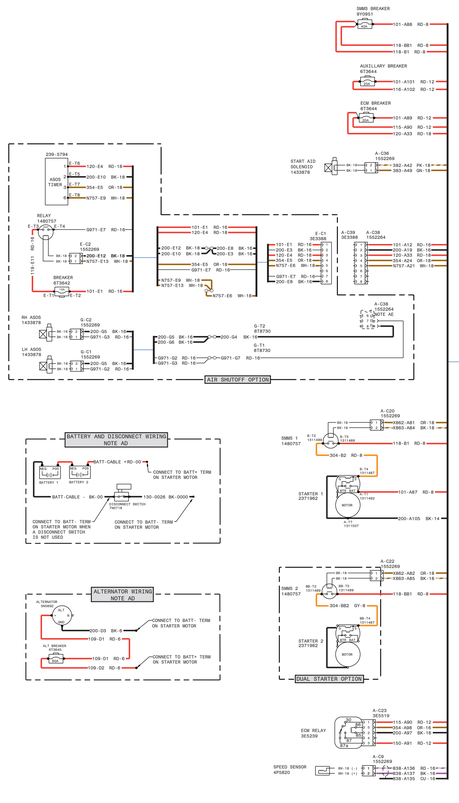

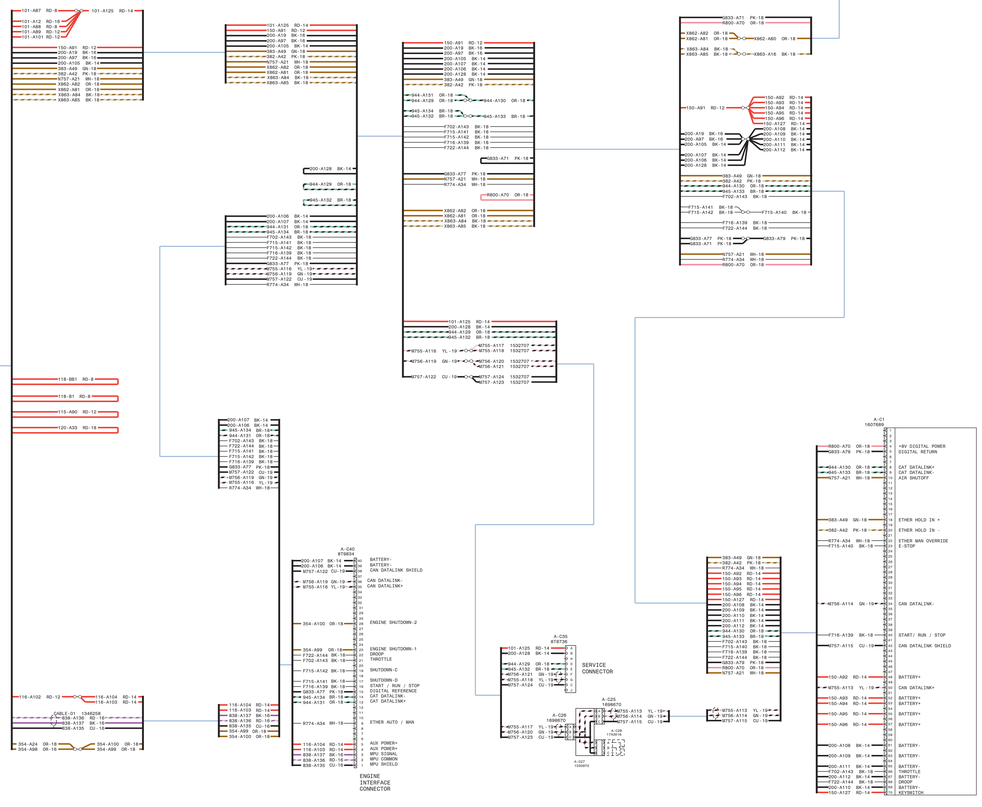

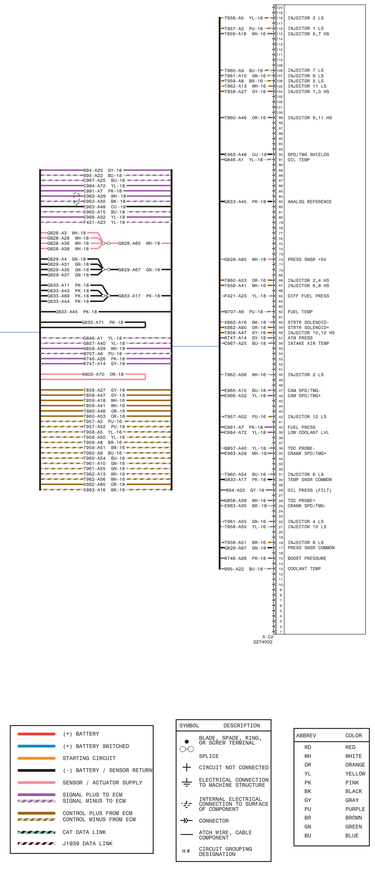

IDENT	P/N	CHG	DESCRIPTION
A	260-9516	04	ENGINE HARNESS (EXTERNAL)
E	282-4358	01	AIR SHUTOFF HARNESS (MAIN)
F	285-6647	00	INJECTOR HARNESS (ODD)
G	282-4359	00	AIR SHUTOFF HARNESS (SOLENOIDS)
J	285-6647	00	INJECTOR HARNESS (EVEN)

DIAGRAM NOTES

NOTE A: SEE RENR7902 TO PROGRAM EMCP INPUTS AND OUTPUTS.
DIGITAL INPUT DI 1 IS DEDICATED TO EMERGENCY STOP
DIGITAL INPUT DI 2 IS DEDICATED TO REMOTE START/STOP
NOTE B: SEE RENR7941 FOR CDVR INPUTS, OUTPUTS AND SETTINGS
NOTE C: REMOVE THE EXISTING JUMPER "229-SJ5" FROM BATT- TO WIRE UP THE REMOTE ESTOP
NOTE D: EMCP3.3/3.2 ONLY
NOTE E: EMCP3.3 ONLY
NOTE F: ENGINE 40 PIN CONNECTOR INTERFACE
NOTE G: SEE LEBE5255 FOR MODBUS APPLICATIONS
NOTE H: FOR USE WITH OPTIONAL ELECTRICALLY OPERATED BREAKER INSTALLED
NOTE J: SIGNAL TO OPEN THE BREAKER NORMALLY. FAULT TRIP IS ISSUED BY EMCP3
NOTE K: OPTIONAL CIRCUIT BREAKER WITH JACKET WATER HEATER
NOTE L: STANDARD CIRCUIT BREAKER FOR GENERATOR HEATER
NOTE M: RESISTIVE SENDER - USE 1916587 TEMPERATURE SENSOR OTHERWISE CONSULT FACTORY
NOTE N: SEE SHEET "CUSTOMER INTERCONNECT-OPT DEVICES" FOR CONNECTION TO REMOTE DEVICES
NOTE P: DEDICATED OUTPUTS:
RELAY OUTPUT #1 - RO1: DEDICATED TO MOTOR STARTER THROUGH ENGINE INTERFACE HARNESS
RELAY OUTPUT #2 - RO2: DEDICATED TO ENGINE START/RUN/STOP THROUGH ENGINE INTERFACE HARNESS (RO2 IS AVAILABLE TO THE CUSTOMER CONNECTION AS A NON PROGRAMMABLE RELAY OUTPUT)
RELAY OUTPUT #3 - RO3: DEDICATED TO ENGINE PRELUBE THROUGH ENGINE INTERFACE HARNESS
RELAY OUTPUT #6 - RO6: DEDICATED TO AUX RELAY "AC-CR2" (CEI ENGINE, EMCP 3.1 ONLY)
DIGITAL OUTPUT #1 - DO 1: DEDICATED TO AUX RELAY "AC-CR2"
NOTE R: ALL THE "DI RTN" ARE JUMPERED TOGETHER AND THEN TIED BACK TO THE BATT-
NOTE S: SEE RENR7902 TO PROGRAM DISCRETE I/O FLEXIBLE INPUTS & OUTPUTS
NOTE T: REMOVE THE 120 OHM RESISTOR CONNECTED B/W TERMINALS CAN2+ & CAN2- BEFORE ADDING CABLE
NOTE U: 236-1158 (WITHOUT FILM). REQUIRES FILM KIT 2606898
236-1159 (INCLUDES STD FILM)
252-7504 (FLUSH MOUNT BOX ASSEMBLY INCLUDES 2361159)
NOTE V: ADD 120 OHM RESISTOR TO THE END-OF THE-LINE DEVICE AFTER REMOVING FROM THE OTHER END
NOTE W: THE REAR, LEFT AND RIGHT SIDES ARE BASED ON CUSTOMER PREFERENCE FOR LOCATION OF CONTROLS
NOTE X: PTs ARE USED IN MV (MEDIUM VOLTAGE), BUT IN CASE OF LV (LOW VOLTAGE) IT IS DIRECT SENSING. SEE SHEET 9 FOR MV WIRING.
NOTE Y: 9-PIN CONNECTOR OF DB-9 TYPE FOR MODBUS RS485 COMMUNICATION TO EMCP3.
NOTE Z: 7-PIN CONNECTOR FOR MODBUS RS485 COMMUNICATION TO SWITCHGEAR & ATS.
NOTE AA: CONFIGURATION PORT. REQUIRES NULL MODEM FOR COMMUNICATIONS.
NOTE AB: ETHERNET PORT FOR CONFIGURATION & MONITORING.
NOTE AC: CONFIGURED BUT NOT USED, AVAILABLE TO BE USED.
NOTE AD: CUSTOMER WIRED AND/OR OPTIONAL COMPONENTS SHOWN FOR REFERENCE ONLY.
NOTE AE: SOCKETS FOR WIRES G971 AND 200 ON HARNESS 2824359 CONNECT TO HARNESS 2609516 A-C39 AS FOLLOWS:
G971-G7 RD-16 SOCKET 7 ON A-C39
200-G4 BK-16 SOCKET 8 ON A-C39

THIS DIAGRAM IS FOR THE C32 GENERATOR SET. (SXC1-UP, WDR1-UP)
DIAGRAM- 260-9515 CH01 DIAGRAM WIRING (ENGINE)

REFER TO THE APPROPRIATE SERVICE MANUAL FOR TROUBLESHOOTING SPECIFICATIONS AND SYSTEM OPERATIONS

COMPONENTS ARE SHOWN INSTALLED ON A FULLY OPERABLE ENGINE WITH KEY IN OFF POSITION AND ENGINE NOT RUNNING

DASH FONT INDICATES AN ATTACHMENT COMPONENT OR HARNESS

PHANTOM FONT INDICATES OPTION OR ATTACHMENT COMPONENT OR HARNESS.

CUSTOMER WIRING AND OPTIONAL FEATURE WIRING SHOWN ARE RECOMMENDED.

ELIMINATION OF ANY COMPONENTS SHOWN WILL DISABLE CERTAIN ENGINE FEATURES.

CONTACT CATERPILLAR ENGINEERING WHEN CONSIDERING COMPONENT REMOVAL.

UNLESS OTHERWISE SPECIFIED, ALL WIRES TO BE 16 AWG OR LARGER.

NO ADDITIONAL CONNECTIONS ARE ALLOWED TO ANY WIRES WITHOUT CATERPILLAR ENGINEERING APPROVAL.